CITY OF SANTA CLARA

www.santaclaraca.gov

CITY COUNCIL MEETING

AGENDA

A complete agenda packet with back-up reports is available at either City Library beginning Saturday before the Tuesday meeting or at the City Clerk's Office on weekdays. A complete agenda packet is also available at the City Council meeting and on the City's website.

July 01, 2014

6:00 pm

Closed Session

Council Conference Room

Conference with Real Property Negotiator
Pursuant to Government Code Section 54956.8
Property: APN 104-03-036, 104-03-038, 104-03-039, 104-03-040
Negotiating Party(ies): Kurt Wittek, Montana Property Group, LLC
City Negotiator: Julio J. Fuentes, City Manager (or designee)
Under Negotiation: Purchase/Sale/Exchange/Lease of Real Property
(provisions, price and terms of payment)
and
Conference with Real Property Negotiator
Pursuant to Government Code Section 54956.8
Property: APN 097-01-039, 097-01-073, 104-01-102, 104-03-036
Negotiating Party(ies): William A. Witte, President, Related California
City Negotiator: Julio J. Fuentes, City Manager (or designee)
Under Negotiation: Purchase/Sale/Exchange/Lease of Real Property
(provisions, price and terms of payment)
and
Conference with Real Property Negotiator
Pursuant to Government Code Section 54956.8
Property: APN 104-03-038, 104-03-039, 104-03-040, 104-43-50, 104-55-16 and 104-43-049
Negotiating Party(ies): Larry MacNeil and Jim Mercurio, The San Francisco 49ers
City Negotiator: Julio J. Fuentes, City Manager (or designee)
Under Negotiation: Parking Rights Agreement
and
City Council/Governing Board of the Successor Agency to the City of Santa Clara Redevelopment Agency
Conference with Legal Counsel - Existing Litigation
Pursuant to Government Code Section 54956.9(a)
Vinod K. Sharma, et al v. Successor Agency to the Redevelopment Agency of the City of Santa Clara, et al.
Sacramento County Superior Court Case No. 34-2013-80001396
and
Conference with Legal Counsel - Existing Litigation
Pursuant to Government Code Section 54956.9(a)
Passetta Park Neighbors v. City of Santa Clara, et al., Santa Clara County Superior Court Case No. 114CV266514
and
Conference with Legal Counsel - Anticipated Litigation
Pursuant to Government Code Section 54956.9(d)(2) - Exposure to Litigation
Number of potential cases: 1

REGULAR MEETING
7:00 PM in the City Hall Council Chambers

APPEAL OF HEARING DECISIONS OF THE CITY COUNCIL MUST BE MADE TO THE SUPERIOR COURT WITHIN 90 CALENDAR DAYS OF FINAL ACTION. BECAUSE OF THE AGENDA PROVISION FOR RECONSIDERATION, FINAL ACTION IS DEEMED TO OCCUR AT THE END OF THE NEXT REGULAR MEETING PURSUANT TO CITY COUNCIL POLICY (P&P 042). (CODE OF CIVIL PROCEDURE SECTION 1094.6)

1. PLEDGE OF ALLEGIANCE AND STATEMENT OF VALUES:

2. ROLL CALL:

3. CONTINUANCE/EXCEPTIONS:

4. SPECIAL ORDER OF BUSINESS:

5. UNFINISHED BUSINESS:

A. Possible Reconsideration of Actions Taken at Immediately Preceding Meeting. (See Summary of Actions for potential reconsideration, which is attached to the posted Agenda and is in the Agenda Packet Binder in the Council Chambers.)

B. Adoption of a Resolution approving a Non-Binding Term Sheet Supplement and First Amendment to the Exclusive Negotiating Rights Agreement with Related Santa Clara, LLC for the proposed development of City Place Santa Clara on approximately 230 acres in the North of Bayshore Area.

6. CONSENT CALENDAR:

[Items listed on the CONSENT CALENDAR are considered routine and will be adopted by one motion. There will be no separate discussion of the items on the CONSENT CALENDAR unless discussion is requested by a member of the Council, staff, or public. If so requested, that item will be removed from the CONSENT CALENDAR and considered under CONSENT ITEMS PULLED FOR DISCUSSION.]

A. Departmental Reports

1. Approval for the use of City Electric forces for the installation of facilities at 920 Kiely.
2. Acceptance of the work performed by Ranger Pipelines, Inc. for Project A - De La Cruz Junction Railroad Undercrossing and Project B - Kenneth Substation Offsite Storm Drain Force Main (Contract 2116C) and authorization to record a Notice of Completion with the County Recorder.
3. Acceptance of the Santa Clara Chamber of Commerce and Convention-Visitors Bureau (SCCC-CVB) Tourism Improvement District Annual Report for Fiscal Year 2013-14.

4. Approval of the plans and specifications for the Northside Tanks Site Improvements Project; authorization to make minor modifications, if necessary; and authorization to advertise for bids (WA 30148).
5. Approval to publish the August 2014 *Mission City SCENES*.
6. Adoption of a Resolution approving exceptions to Council Policy 004 - Banners on Public Property for opening activities at Levi's Stadium; authorization to enter into an Agreement allowing StadCo and Stadium Management Company to install hardware and banners on street light poles on Great America Parkway and Tasman Drive; and direct that the policy be revised to accommodate future events.

B. Agreements

1. Approval of a Neighborhood Solar Program Agreement with the Muslim Community Association of San Francisco Bay Area, in an amount not to exceed $100,000, for the installation of a solar electric system as part of the Neighborhood Solar Program.
2. Adoption of a Resolution granting authority to approve and execute Fiber Lease Agreements.
3. Approval of an Agreement for the Performance of Services with Vickie Vanderburg, Inc., dba Power Systems Operations, in an amount not to exceed $203,000, for VERA validation software updates to support the Electric Department's Resources Power Trading Division.
4. Approval of an Agreement for the Performance of Services with Canus Corporation, in an amount not to exceed $150,000, for inspection of Silicon Valley Power's 12kV Distribution Equipment.
5. Approval of an Agreement for the Performance of Services with Vicki Vanderburg, Inc., dba Power Systems Operations, in an amount of $50,000 per year and for a total not to exceed amount of $250,000, for VERA software maintenance support for the Electric Department's Power Trading Division.
6. Approval of the Memorandum of Understanding (MOU) with the Employees' Association (Units# 5, 7 and 8) for the term from December 22, 2013 through December 19, 2015, consistent with prior Council action.
7. Approval of a Call Agreement with Portland Energy Conservation, Inc. and Call No. 14-1 for Professional Services, in an amount not to exceed $34,898, for the Small Data Center Market Characterization Study implementation.
8. Approval of an Agreement for the Performance of Services with Davey Tree Surgery Company, in the amount of $869,731.20 for the first year and for a total amount not to exceed $2,957,077.38, for tree trimming for power line clearance.

9. Approval of an Agreement for Professional Services with Harris and Associates, Inc., in an amount not to exceed $842,411 for the first year and for a total not to exceed amount of $2,526,411, to provide program and construction management services.

C. Reports for Information and Possible Action

D. Minutes to Note and File

E. Routine Written Petitions for Approval

1. Santa Clara Sparks/PAL: Request for matching funds from the Championship Team Trust Fund, in the amount of $4,200, for travel to San Diego, CA July 11-13, 2014 to compete in the Pacific Coast Division C Softball Regional Championships for 10U and 12U. Staff recommendation: Approval, subject to execution of a Contribution Agreement.

7. BOARDS AND COMMISSIONS FOR ACTION:

8. CONSENT ITEMS PULLED FOR DISCUSSION:

9. PUBLIC PRESENTATIONS:

This item is reserved for persons to address the Council on any matter not on the agenda that is within the subject matter jurisdiction of the City. The law does not permit Council action on, or extended discussion of, any item not on the agenda except under special circumstances. The Council, or staff, may briefly respond to statements made or questions posed, and the Council may request staff to report back at a subsequent meeting. Although not required, please submit to the City Clerk your name and subject matter on forms available by the door in the Council Chambers.

10. REPORTS FOR COUNCIL ACTION:

A. Acceptance of a donation from the Community Foundation of Santa Cruz County on behalf of the Bessie Vizzusi-Gruhlke Fund, in the amount of $1,500, for the Senior Center Woodshop program and authorization to transmit a letter of appreciation.

B. Acceptance of a donation from the Santa Clara Homestead Little League, in the amount of $2,083.37, for the purchase of sports turf sod to be installed at Homestead Little League Field located at Earl Carmichael Park and authorization to transmit a letter of appreciation.

C. Approval of an Amendment to the Fiscal Year 2013-14 Annual Plan for the use of Community Development Block Grant (CDBG) and Home Investment Partnerships Act Entitlement (HOME) funds, in the amount of $110,000, to increase HOME program administration on a one-time basis and approve the transfer and appropriations of funds.

11. BILLS AND CLAIMS/PROGRESS PAYMENTS:

(Lists are available in the Council Office and the City Clerk's Office.)

A. Approval of Bills and Claims and Progress Payments.

12. REPORTS OF COUNCILORS AND SPECIAL COUNCIL COMMITTEES:

A. Reports regarding conference attendance, if any.

13. CITY MANAGER REPORTS:

14. CLOSED SESSION MATTERS:

A. City Attorney Reports:

B. Approval to set July 15, 2014 at 6:00 pm for a Closed Session in the Council Conference Room for a Conference with Legal Counsel - Existing Litigation pursuant to Government Code Section 54956.9(a) *Vinod K. Sharma, et al. v. Successor Agency to the Redevelopment Agency of the City of Santa Clara, et al.*, Sacramento County Superior Court Case No. 34-2013-80001396.

15. ADJOURNMENT:

A. To Tuesday evening, **July 15, 2014** at 7:00 pm for the regular scheduled meeting in the City Hall Council Chambers.

7/1/14

CLOSED SESSION REQUEST

6:00PM

City of Santa Clara, California

It is requested the **CITY COUNCIL OF THE CITY OF SANTA CLARA** meet in closed session on **Tuesday, July 1, 2014,** at **6:00 p.m.**, or as soon thereafter as the matter can be discussed, in the Council Conference Room located in the East Wing of City Hall at 1500 Warburton Avenue, Santa Clara, California, to consider the following matter(s) and to potentially take action with respect to it/them:

☒ **CONFERENCE WITH REAL PROPERTY NEGOTIATOR**
Pursuant to Gov. Code § 54956.8
Property: APN 104-03-036, APN 104-03-038, APN 104-03-039, APN 104-03-040
Negotiating Party(ies): Kurt Wittek, Montana Property Group, LLC
City Negotiator: Julio J. Fuentes, City Manager (or designee)
Under Negotiation: Purchase/Sale/Exchange/Lease of Real Property (provisions, price and terms of payment)

☒ **CONFERENCE WITH REAL PROPERTY NEGOTIATOR**
Pursuant to Gov. Code § 54956.8
Property: APN 097-01-039, APN 097-01-073, APN 104-01-102, APN 104-03-036
Negotiating Party(ies): William A. Witte, President, Related California
City Negotiator: Julio J. Fuentes, City Manager (or designee)
Under Negotiation: Purchase/Sale/Exchange/Lease of Real Property (provisions, price and terms of payment)

☒ **CONFERENCE WITH REAL PROPERTY NEGOTIATOR**
Pursuant to Gov. Code § 54956.8
Property: APN 104-03-038; 104-03-039; 104-03-040; 104-43-50; 104-55-16; and 104-43-049
Negotiating Party(ies): Larry MacNeil and Jim Mercurio, The San Francisco 49ers
City Negotiator: Julio J. Fuentes, City Manager (or designee)
Under Negotiation: Parking Rights Agreement

☒ **CONFERENCE WITH LEGAL COUNSEL-EXISTING LITIGATION**
Pursuant to Gov. Code § 54956.9(a)
Vinod K. Sharma, et al. v. Successor Agency to the Redevelopment Agency of the City of Santa Clara, et al., Sacramento County Superior Court Case No. 34-2013-80001396

☒ **CONFERENCE WITH LEGAL COUNSEL-EXISTING LITIGATION**
Pursuant to Gov. Code § 54956.9(a)
Pasetta Park Neighbors v. City of Santa Clara, et al., Santa Clara County Superior Court Case No. 114CV266514

☒ **CONFERENCE WITH LEGAL COUNSEL-ANTICIPATED LITIGATION**
Pursuant to Gov. Code § 54956.9(d)(2) – Exposure to litigation
Number of potential cases: 1

Date: June 27, 2014

RICHARD E. NOSKY, JR.
City Attorney

CLOSED SESSION NOTICE

Successor Agency to the City of Santa Clara
Redevelopment Agency

The **GOVERNING BOARD OF THE SUCCESSOR AGENCY TO THE CITY OF SANTA CLARA REDEVELOPMENT AGENCY** will meet in closed session on **Tuesday, July 1, 2014,** at **6:00 p.m.**, or as soon thereafter as the matter can be discussed, in the Council Conference Room located in the East Wing of City Hall at 1500 Warburton Avenue, Santa Clara, California, to consider the following matter(s) and to potentially take action with respect to it/them:

☒ **CONFERENCE WITH LEGAL COUNSEL-EXISTING LITIGATION**
Pursuant to Gov. Code § 54956.9(a)
Vinod K. Sharma, et al. v. Successor Agency to the Redevelopment Agency of the City of Santa Clara, et al., Sacramento County Superior Court Case No. 34-2013-80001396

Date: June 27, 2014

RICHARD E. NOSKY, JR.
Successor Agency Counsel

I:\COUNCIL\CLOSED SESSION AND SPECIAL MEETINGS\2014\07-01-14 Notice Succ Agcy Exist Lit.doc

Meeting Date: 7/1/14

AGENDA REPORT

City of Santa Clara, California

Agenda Item # 5B

Santa Clara All-America City 2001

Date: June 27, 2014

To: City Manager for Council Action

From: Economic Development Officer/Assistant City Manager

Subject: Adopt a Resolution Approving Term Sheet Supplement and First Amendment to Exclusive Negotiating Agreement with Related Santa Clara LLC for the Proposed Development City Place Santa Clara on Approximately 230 Acres in the North of Bayshore Area

SUMMARY:

On April 9, 2013, Council approved an Exclusive Negotiating Rights Agreement (ENA) with Related Santa Clara LLC (Developer) for the development of approximately 230 acres of land in the North of Bayshore Area ("Property" - APNs: 097-01-039; 097-01-073; 104-01-102; 104-03-036; and 104-03-037). The Property is located within the City's entertainment district in the North Bayshore area and houses uses such as the Santa Clara Golf and Tennis Club, David's Restaurant, David's Banquet, Fire Station #10, Parks Maintenance facility and PAL BMX track.

The size of the Property allows for the potential development of a significant mixed-use project that creates a sense of place with a blend of entertainment, retail, dining, office and residential uses. The development of the Property will further the City's goal of economic and housing development and will serve the public purpose of providing significant economic benefits to the City and its residents and businesses.

The concept developed for the project, City Place Santa Clara, is a significant mixed use development consisting of a premier multi-block retail/entertainment/restaurant complex with adjacent hotel, residential, office uses and associated parking. The focal point of the project will be the City Center, a mixed use, pedestrian-oriented area featuring significant retail and entertainment uses such as department stores and cinemas. The City Center portion of the project is proposed to include a mix of national retailers with a demonstrated track record of high quality merchandise and service. The development value of the project is estimated to exceed $6.5 billion.

Since the commencement of the ENA in April 2013, the Developer completed a series of analyses on the Property to determine: the physical condition of the Property; constructability on the landfill; access and utility capacities; title condition and other items necessary to characterize the adequacy of the Property for development. In addition, the Developer has coordinated numerous meetings with local and State regulatory agencies, including a study session with the Regional Water Quality Control Board, about development on top of the landfill.

These analyses provided the context/background for the negotiation of the terms of a potential land transaction with the Developer. Unlike typical parcels ready for development or redevelopment, the development of the former landfill requires a significant infrastructure investment prior to commencement of

construction of buildings. This infrastructure investment includes the need to build 1) a stable ground floor (or a platform) to accommodate the continued settlement of the landfill over time and 2) the necessary water, sewer, electric, storm, gas utilities and roadway systems to accommodate development over 215 acres of land. This infrastructure investment has been estimated at more than $800 million. Although the Developer will be required to make these infrastructure investments on behalf of the City, the City, will in effect, take on some of this responsibility through a reduction in rent in the earlier years of the lease.

In February 2014, City Council approved a non-binding Term Sheet with the Developer. The Term Sheet documented a number of provisions regarding the conceptual land use; Infrastructure Master Plan; parking; ground lease term; expectations on community benefits; responsibilities regarding landfill operation; relocation of existing uses; sustainability; and, collection of sales tax which set the framework of the overall transaction for the project. These terms are to be more fully described in Transaction Documents, including a Disposition and Development Agreement (DDA) which would set forth the predevelopment activities to be performed; a Development Agreement (DA) which would establish the Developer's vested rights; one or more Ground Leases; and any necessary documents for the conveyance, management and development of the Property.

In addition, the Term Sheet provided that the parties would negotiate a framework for the calculation of ground rent during a limited period immediately following the execution of the Term Sheet. The requested Term Sheet Supplement provides for the framework of the ground lease payments over time accounting for potential phasing; timing of commencement of payment; and adjustments to rent.

The intent of the Term Sheet and Term Sheet Supplement is to document the proposed respective commitments and obligations of the City and the Developer in a non-binding agreement. Terms negotiated in the Term Sheet Supplement will serve as a further outline in continuing negotiations between the Developer and the City in defining and documenting all aspects of a proposed long-term lease agreement. The development project will not proceed unless and until the parties have negotiated, executed and delivered mutually acceptable agreements based upon information produced from the CEQA environmental review process and from other public review and hearing processes, and subject to all applicable governmental approvals. Critical elements of the Term Sheet Supplement are addressed in more detail below.

- Conceptual Land Use Concept and Phasing Strategy: The Developer contemplates building a total of 7,912,000 square feet of retail/restaurant/entertainment (1,460,000 square feet); hotel (300,000 square feet); residential (408,000 square feet); and office (5,744,000 square feet). The land uses will be constructed over seven phases across four parcels.

- Minimum Initial Development: The initial development will consist of 700,000 square feet of retail (500,000 sf) and office/hotel space (200,000 sf) and the Developer will use its best efforts to construct 930,000 square feet of improvements. Subject to force majeure provisions, the ground lease for this initial development is required to be taken down by December 2017 and Developer would be required to start construction by 2019. Although the Term Sheet Supplement sets forth outside dates, the Developer is targeting a conveyance of the initial ground lease in 2016 with an

immediate start of construction. Under an aggressive schedule, the opening of the first phase could occur as soon as 2019.

- Timing of Phasing: The Term Sheet Supplement allows for the conveyance of multiple ground leases (take down) over time. Parcel 4, the mixed-use City Center portion of the project, or Phases 1-3 will be taken down over a 10 year period following the initial take down. Phases 4-7 must be taken down over the following 10 year period. Therefore, the maximum take down period for the entire project is 20 years. The Developer may elect to take down any phase earlier than scheduled and/or take down Phases 4-7 in any order.

- Rent: The initial annual rent for each Phase is a follows: Phase 1 - $1.5 million; Phase 2 - $500,000; for each of Phases 3 through 5 - $750,000 and for each of Phases 6-7 - $875,000; for a total of $6,000,000 over all seven phases.

- Annual Adjustments to Rent: The initial rent shall be increased by 3% annually with the exception of Years 15, 25, 35, 53, 61, 80 and 90 in which the rent shall increase by 10% over the prior year. In addition, the City will receive two fair market rent adjustments in Years 45 and 70. Subject to a negotiated floor and cap, these fair market rent adjustments will be based on the then appraised value of the land as if it were vacant, less the agreed costs that Developer incurred to supply infrastructure that are above and beyond typical costs due to the unusual site, with the resulting value at 6.5% return to the City.

- Ground Lease Term: Per the Term Sheet, the maximum term of each ground lease will be 99 years. However, the Term Sheet Supplement provides that Phases 2-7 will be co-terminus with Phase 1 with the exception that the minimum term for any lease will be 89 years. At the end of the term, all improvements will revert to the City.

- Operation and Maintenance of Landfill Operations: The Term Sheet provided that the City would maintain ownership and operation responsibility of the landfill and that the Developer would be responsible for any of the capital improvements to the landfill necessary to accommodate the development. The City currently expends approximately $400,000 annually on landfill monitoring and maintenance. The Term Sheet Supplement provides that the City will continue to be responsible for the $400,000 annual cost and the Developer would reimburse the City for any landfill maintenance and operation costs above $400,000 up to a cap of $1,000,000. Environmental consultants have advised that it appears that a new gas extraction system to be installed by Developer could actually decrease the City's current cost expose to less than $400,000 annually.

The ENA provides for a period of time for the Developer to complete predevelopment efforts including extensive design; engineering; legal; environmental and CEQA scopes of work. The ENA provided a term of 18 months with the potential of two six-month extensions. Under these terms, the 18 month initial period will expire in October 2014. Given the breadth of work already completed and investment already made in the project combined with the scopes of work yet to be accomplished, the Developer has requested Amendment No. 1 to the ENA to provide that the term be extended to March 15, 2016 with the possibility of

two six-month extensions. Staff believes that the timeframe to complete the requisite CEQA documentation, review and approval process is likely to exceed a 12 month period and may take up to 18 months. The recommended action provides for the extension necessary to allow for the completion of predevelopment efforts.

It is anticipated that the project will return to City Council for consideration of an Environmental Impact Report; General Plan and Zoning modifications; a Disposition and Development Agreement, with a form of Ground Lease; and a Development Agreement in fall 2015.

ECONOMIC/FISCAL IMPACT:

There is no fiscal impact associated with approval of the recommended action other than staff time and administrative expense.

Although there is no fiscal impact associated with approval of the recommended action, the Term Sheet Supplement provides for the framework of potential lease revenues to the City's General Fund. Under the terms of the Supplement, the City's economic/fiscal consultant, Keyser Marston Associates, has estimated that potential lease revenue to the City could be $5.74 billion under a conservative scenario and up to $10.4 billion under a more aggressive scenario. The resulting average annual lease revenue to the City ranges from $53.6 million to $96.3 million. Under a present day calculation, this translates to an average rent of approximately $7 million to $12.2 million.

In addition to rent, the City will receive sales, property and transient occupancy taxes from the project. These taxes have been estimated to be an additional $15.5 million annually (not included in this estimate are funds received for utility use). Thus, the total annual revenue to the City General Fund resulting from the project could be in the range of $22.5 million to $27.7 million. It is important to note that the infrastructure work necessary to achieve this income stream from the landfill (estimated at a cost of more than $800 million) is being funded by the Developer without a cash outlay from the City.

//

RECOMMENDATION:

That the Council adopt a Resolution approving and authorizing the City Manager to execute the Term Sheet Supplement and Amendment No. 1 to Exclusive Negotiating Agreement between the City of Santa Clara and Related Santa Clara LLC for the development of City Place Santa Clara on approximately 230 acres in the North of Bayshore Area.

Ruth Shikada
Economic Development Officer/
Assistant City Manager

APPROVED:

Julio J. Fuentes
City Manager

Documents Related to this Report:

1) ***Resolution***
2) ***Term Sheet Supplement with Related Santa Clara LLC***
3) ***Amendment No. 1 to Exclusive Negotiations Agreement***

RESOLUTION NO. _____

A RESOLUTION OF THE CITY OF SANTA CLARA, CALIFORNIA, APPROVING A NON-BINDING TERM SHEET SUPPLEMENTAL AND FIRST AMENDMENT TO EXCLUSIVE NEGOTIATING AGREEMENT WITH RELATED SANTA CLARA LLC FOR PROPOSED MIXED USE DEVELOPMENT

BE IT RESOLVED BY THE CITY OF SANTA CLARA AS FOLLOWS:

WHEREAS, the City owns approximately 230 acres of land (APNs 097-01-039, 097-01-073, 104-03-036, 104-03-037 and 104-01-102) in the North of Bayshore Area (collectively, the "Property");

WHEREAS, Related Santa Clara LLC ("Related"), an experienced full-service real estate firm, has proposed to construct a mixed use project on the Property (the "Project"). The City and Related (collectively, the "Parties") believe that the Project would be highly beneficial to City inasmuch as, when completed, it would create a new "city center" containing some or all of the following elements, among others: significant retail facilities, office buildings, rental and for sale residential facilities, hotel rooms that would support City's convention center, new parks and open space, and new roads and infrastructure;

WHEREAS, a large portion of the Property consists of a former landfill site (the "Landfill"). The Project would serve to convert the space over the Landfill to productive use, cause the modernizing of the recovery systems operated by City at the Landfill, and create a significant new tax base for City;

WHEREAS, in April 2013, City and Related entered Exclusive Negotiating Rights Agreement (the "ENA") for the development of the Property with a ENA term of 18 months with an additional two six-month extensions, for a total 30-month term;

WHEREAS, the development of the Project presents many potential opportunities for City, including: maximizing the production of housing and commercial space to the greatest extent possible to create a new and vibrant City neighborhood; providing new parks, public open spaces and other community benefits; and increasing City revenues;

WHEREAS, in February, 2014, the City and Related Santa Clara LLC executed a Non-Binding Term Sheet (the "Term Sheet") to memorialize the key policy goals, basic development guidelines, financial framework, and other preliminary terms and conditions identified by the Parties that would form the basis for the negotiation and completion of necessary transaction documents for the conveyance, management, and development of the Property (collectively referred to as the "Transaction Documents");

WHEREAS, the Term Sheet sets forth an understanding between the Parties to cooperate in the development, processing and completion of appropriate environmental review pursuant to the California Environmental Quality Act ("CEQA") by the designated Lead Agency;

WHEREAS, the Term Sheet sets forth some of the terms and conditions related to the development of the Project so that the Lead Agency can commence development, processing and completion of the appropriate CEQA documentation and preparation of land use plans and potential entitlements documents;

WHEREAS, the Term Sheet contemplated that during a limited period following the execution of the Term Sheet the Parties would negotiate and agree upon a framework and rent structure for the calculation of Ground Rent including a Minimum Payment and a phasing and payment schedule for long term Ground Rent payments to be included in the form of Ground Lease ("Term Sheet Supplement");

WHEREAS, the Term Sheet and Term Sheet Supplement (collectively "Term Sheets") are intended to provide a general framework for the subsequent negotiation of the Transaction Documents for consideration by the City Council, and are not intended to create any binding contractual obligations to any party thereto or to commit any party to a particular course of action;

WHEREAS, the terms set forth in the Term Sheets are the Parties' preliminary concepts that are projected to be further developed and detailed in the Transaction Documents, but they are not intended, nor should they be considered as, binding on the Parties;

WHEREAS, the time period necessary to prepare the appropriate CEQA documentation and the Transaction Documents for City Council consideration may extend beyond the 30-month ENA term;

WHEREAS, the Parties reserve their complete and sole discretion to evaluate and determine project impacts, alternatives and mitigation measures including, but not limited to, the ability to choose the "No Project" alternative under CEQA; and,

WHEREAS, by entering into the Term Sheets, the Parties do not intend to make an irretrievable commitment of resources or to commit to any course of action prior to completion of all appropriate environmental review.

NOW THEREFORE, BE IT FURTHER RESOLVED BY THE CITY OF SANTA CLARA AS FOLLOWS:

1. **Recitals**. The City Council hereby finds that the above Recitals are true and correct and by this reference makes them a part hereof.

2. **Approval of Term Sheet Supplement.** The City Council hereby approves the Non-Binding Term Sheet Supplement with Related Santa Clara LLC and authorizes the City Manager

to enter into and execute the Term Sheet Supplement Agreement, substantially in the form on file with the City Clerk of the City of Santa Clara, with such revisions as are reasonably determined necessary by the City signatory, such determination to be conclusively deemed to have been made by the execution of such agreement by the City signatory. The City Manager is authorized to implement the Non-Binding Term Sheets and take all further actions and execute all other documents which are necessary or appropriate to carry out the Non-Binding Term Sheets.

3. **Approval of First Amendment to ENA.** The City Council hereby approves the First Amendment to ENA with Related Santa Clara LLC, which extends the initial term of such agreement to March 15, 2016, and authorizes the City Manager to enter into and execute the First Amendment, substantially in the form on file with the City Clerk of the City of Santa Clara, with such revisions as are reasonably determined necessary by the City signatory, such determination to be conclusively deemed to have been made by the execution of such agreement by the City signatory. The City Manager is authorized to implement the First Amendment to ENA and take all further actions and execute all other documents which are necessary or appropriate to carry out the First Amendment.

4. **Constitutionality, severability.** If any section, subsection, sentence, clause, phrase, or word of this resolution is for any reason held by a court of competent jurisdiction to be unconstitutional or invalid for any reason, such decision shall not affect the validity of the remaining portions of the resolution. The City of Santa Clara, California, hereby declares that it would have passed this resolution and each section, subsection, sentence, clause, phrase, and word thereof, irrespective of the fact that any one or more section(s), subsection(s), sentence(s), clause(s), phrase(s), or word(s) be declared invalid.

5. **Effective date.** This Resolution shall become effective immediately.

I HEREBY CERTIFY THE FOREGOING TO BE A TRUE COPY OF A RESOLUTION PASSED AND ADOPTED BY THE CITY OF SANTA CLARA, CALIFORNIA, AT A REGULAR MEETING THEREOF HELD ON THE ___ DAY OF JULY, 2014, BY THE FOLLOWING VOTE:

AYES: COUNCILORS:

NOES: COUNCILORS:

ABSENT: COUNCILORS:

ABSTAINED: COUNCILORS:

ATTEST: _____
ROD DIRIDON, JR.
CITY CLERK
CITY OF SANTA CLARA

Attachments incorporated by reference: None.

TERM SHEET SUPPLEMENT
RELATED PROJECT - SANTA CLARA

This Term Sheet Supplement (this **"Supplement"**) is entered into as of _____, 2014, by and between the City of Santa Clara, California (**"City"**), and Related Santa Clara, LLC (**"Developer"**). City and Developer are sometimes referred to herein, collectively, as the **"Parties"**. Capitalized terms used in this Supplement without definition shall have the meanings given to such terms in the Term Sheet (defined below).

RECITALS

A. As of February 11, 2014, the Parties entered into a Term Sheet (the **"Term Sheet"**) that sets forth the potential terms being negotiated in respect of the Project, based upon the provisions of an Exclusive Negotiating Rights Agreement entered into by the Parties in April, 2013 for the development of the Property (as amended and as it may be further amended from time to time, the **"ENA"**).

B. The area that is the subject of the Term Sheet (the **"Property"**) is described in the Term Sheet and comprises approximately 230 acres of land (APNs 097-01-039, 097-01-073, 104-03-036, 104-03-037, and 104-01-102) in the North of Bayshore Area, owned in fee by City. Most of the Property is the site of a former landfill (the **"Landfill"**). City intends to retain ownership of the Property and operational responsibility for the Landfill and intends to ground lease the Property to Developer under a series of ground leases (each, a **"Lease"** or **"Ground Lease"**), all as more particularly described in and subject to the terms of the Term Sheet and this Supplement.

C. In Section V. D. of the Term Sheet, the Parties set forth a procedure for arriving at a proposed rent structure for the Ground Leases. They have now completed that procedure with the assistance of outside consultants and have negotiated the rent structure and the related issues set forth below.

D. This Supplement was presented to City Council on _____, 2014. At that hearing, City Council voted____ to adopt Resolution No. _____ endorsing this Supplement. A copy of Resolution No. _____ is attached hereto as Exhibit E.

NOW, THEREFORE, the Parties have entered into this Supplement for the purposes of setting forth a proposed rent structure for the Ground Leases and supplementing other provisions of the Term Sheet, but with the understanding that this Supplement is subject to all of the terms and conditions of Section I of the Term Sheet.

I. TERMS USED IN THIS SUPPLEMENT

The following terms used in this Supplement have the meanings set forth below:

"Allowed Square Footage" means the number of square feet of improvements that is permitted by City ordinance and other regulatory bodies to be built on a Phase and that can economically be constructed and operated on any Phase in compliance with all laws, regulations and conditions of approval. This number shall be determined and documented on a one time

basis and shall be calculated after City's receipt, evaluation and approval (not to be unreasonably withheld) of Developer's analysis of such permitted development and the viability of the same, which Developer shall provide to City promptly following the completion and opening of Phase 2. The precise manner and detailed criteria for determining this number shall be set forth in the DDA.

"**Force Majeure**" means any delay suffered by Developer in performing an obligation, exercising a right or meeting a deadline under the Transaction Documents to the extent such delay is caused by any of the following: war; acts of terrorism; insurrection; strikes; lock-outs; riots; floods; earthquakes; fires; casualties; acts of God; acts of the public enemy; epidemics; quarantine restrictions; freight embargoes; lack of transportation; governmental restrictions or priority; environmental conditions existing or discovered on or affecting the Project site or any portion thereof, including those resulting from the investigation or remediation of such conditions; litigation that enjoins construction or other work on the Project site or any portion thereof, causes a lender to refuse to fund a loan or to accelerate payment on a loan, or would cause a reasonably prudent developer either to forbear from commencing construction or other work on the Project site or any Phase or portion thereof or to suspend construction or other work; disruptions in the public or private financing markets that delay or materially increase the cost of public or private financing for the Project; unusually severe weather; inability to secure necessary labor, materials or tools; delays of any contractor, subcontractor or supplier; moratorium, as defined in California Government Code Section 66452.6(f); litigation challenging City's or another regulatory body's approval of the Project (or any part thereof) or any of the Transaction Documents; the inability to obtain on a timely basis other approvals required for commencement and completion of the improvements contemplated for the Project (assuming that Developer is using commercially reasonable efforts to obtain such approvals); the occurrence of Landfill or other construction cost premiums that render development of a Parcel or portion thereof commercially uneconomic; and Materially Adverse Economic Conditions.

"**Lease Year**" means a 12 month period, with the first Lease Year for each Phase beginning with the Take Down of such Phase. However, the references to the 15th, 25th, 35th, 44th, 45th, 53rd, 61st, 70th, 80th and 90th Lease Years in Section III.B below mean for all Phases such Lease Years as calculated for Phase 1. By way of example, the ten percent (10%) Rent increase described in Section III.B.1 below shall occur with respect to all Phases as of the 15th, 25th, 35th, 53rd, 61st, 80th and 90th Lease Years for Phase 1.

"**Materially Adverse Economic Conditions**" means (i) with respect to office product, that the published C&W Silicon Valley Class A Office vacancy rate is 15% or higher; and (ii) with respect to retail product, that the comparable vacancy rate is more than 10% at Valley Fair Shopping Center and/or Stanford Shopping Center (except that if the vacancy rate is more than 10% at only one of those two centers because of circumstances unrelated to market forces, such as bankruptcy, foreclosure or substantial renovation, then such vacancy rate would be required at both centers).

"**Minimum Initial Development**" means Developer's obligation to build 700,000 square feet of improvements in Phase 1 consisting of (1) 500,000 square feet of retail and (ii) 200,000 square feet of office and/or a 350 key hotel.

"**Minimum Retail Development**" means Developer's obligation to build 750,000 square feet of retail in Phases 1 and 2.

"**Parcel**" means each of the four (4) parcels shown on Exhibit A, as the same may be reconfigured as set forth below.

"**Phase**" means each of the seven (7) phases shown on Exhibit A, as the same may be reconfigured as set forth below.

"**Premium Costs**" means all costs that are incurred by Developer (1) to design and construct the infrastructure necessary to support the development of the Project under the final Infrastructure Master Plan, and that are required on account of the Landfill and the lack of customary infrastructure on the Site, net of reimbursements of such costs received by Developer from the owner of the Tasman Parcels or other area landowners; and (2) to acquire necessary rights and access to the Property. Exhibit C contains Developer's current estimate of the Premium Costs and describes the categories into which such costs are likely to fall. City agrees that Developer's estimate is informative and appears reasonable based upon available data, although the Parties agree that further refining of such estimate will need to be done in connection with finalizing the Transaction Documents. Following the opening for business of each Phase, Developer will provide City with the actual Premium Costs incurred in connection with each Phase (including "open book" backup of such costs), and the Transaction Documents will provide a procedure for the Parties to verify and finalize such actual Premium Costs within 12 months after the opening for business of such Phase. Regarding the Rent adjustment in the 45th and 70th Lease Years, "hard" Premium Costs shall be allocated among Phases based on the actual square footage of improvements constructed in such Phases, while "soft" Premium Costs (meaning third party costs to Developer of design and engineering with respect to such "hard" costs) shall be allocated among Phases in Developer's reasonable judgment.

"**Rent**" means the annual rent payable to City, as landlord, by Developer, as tenant, under a Lease, which will be payable in equal monthly installments.

"**Take Down**" refers to City and Developer entering into a Lease with respect to a particular Phase on the terms set forth below.

II. PHASING, TAKE DOWNS, CONSTRUCTION COMMENCEMENT AND OPENING

A. Development of the Project is expected to take place over a total of seven (7) Phases on a total of four (4) Parcels. The current configuration and intended use of the Phases and Parcels are shown on Exhibit A, although the Parties acknowledge that the configuration and uses of all Phases may be changed by Developer over time (subject to compliance with applicable law), including to accommodate the leasing of space in the proposed improvements thereon. Upon any reconfiguration, the Rent shall be apportioned on an equitable basis among the Leases for the reconfigured Phases and Parcels.

B. Developer shall elect by notice to City from time to time to Take Down particular Phases no later than the times shown on Exhibit B, subject to Force Majeure with respect to Phase 1 only, and upon such election, City and Developer shall enter into a separate Lease for such Phase. The form of Lease will be attached as an exhibit to the DDA. Developer's failure

to Take Down any Phase (other than Phase 1) on or before the last date for such Take Down shall not be a default by Developer but shall result in the loss by Developer of its right to Take Down such Phase. As shown on Exhibit B, Developer will have an aggregate take down period for Phases 1-7 totaling 20 years (measured from the Take Down of Phase 1). However, Developer will use commercially reasonable efforts to take down Phases 2-7 within 10 years from the Take Down of Phase 1. Developer will commence construction on each Phase when shown in Exhibit B subject to Force Majeure, with infrastructure to be built in accordance with the Infrastructure Master Plan. No later than six (6) months prior to the anticipated start of construction on a Phase, Developer will provide City with a construction schedule for such Phase.

C. Developer will build the Minimum Initial Development and will use its best efforts to build an additional 230,000 square feet (for a total of 930,000 square feet) of improvements in Phase 1. Developer will also build the Minimum Retail Development and will use its best efforts to build a total of 1.5 million square feet of retail, food and beverage and entertainment uses in Phases 1 and 2. The purpose of this paragraph D is to define "minimum project" as used in paragraph 3 of Section VII.D of the Term Sheet, and no other paragraphs of such Section VII.D are intended to be affected by this paragraph D.

III. RENT STRUCTURE

A. Rent and Rent Commencement. The initial Rent for each Phase is as follows: Phase 1 - $1.5 million; Phase 2 - $500,000; for each of Phases 3 through 5 - $750,000; and for each of Phases 6 and 7 - $875,000; provided, that to the extent that any of Phases 2-7 have not been taken down within ten (10) years after the Take Down of Phase 1, the initial Rent for each Phase not so taken down shall increase at the rate of three percent (3%) per annum from the end of such ten (10) year period until the date of Take Down of such Phase. The aggregate initial Rent for all seven (7) Phases is Six Million Dollars ($6,000,000), subject to increase as provided in the foregoing sentence. Rent shall commence with respect to each Phase on the Take Down date for that Phase.

B. Rent Adjustments. Beginning with the first anniversary of the Take Down of a Phase and continuing through the 44th Lease Year, Rent will increase by three percent (3%) over the Rent for such Phase for the prior Lease Year. Beginning with the 46th Lease Year and continuing through the end of the Lease term for such Phase, Rent will increase by the lesser of (i) three percent (3%) over the Rent for the prior Lease Year for such Phase or (ii) the increase in the CPI (chosen by the Parties) since the beginning of the prior Lease Year. However, the foregoing shall not apply with respect to the Rent in the 15th, 25th, 35th, 45th, 53rd, 61st, 70th, 80th and 90th Lease Years, which Rent shall be adjusted as follows:

1. in the 15th, 25th, 35th, 53rd, 61st, 80th and 90th Lease Years, Rent will increase by ten percent (10%) over the Rent for the prior Lease Year;

2. in the 45th Lease Year, Rent will be an amount equal to the fair market value of the land underlying the Project (valued via independent appraisal as if the property were vacant land and were zoned the same as comparable use properties), less the actual Premium Costs allocated thereto, multiplied by six and one half percent

(6.5%). The manner in which the appraisal will be conducted, as well as instructions to the appraiser and an illustration of same if performed in 2014, will be set forth in the Transaction Documents. Notwithstanding the foregoing, in no event shall (a) the Rent for all seven (7) phases be less than $30,000,000, adjusted as provided below; (b) the Rent for any particular Phase be reduced from the Rent for such Phase in the 44th Lease Year; or (c) the value of the land underlying any Phase of the Project, for purposes of the calculation of Rent in the 45th Lease Year, exceed $200 times the Allowable Square Footage in such Phase;

3. in the 70th Lease Year, Rent will be an amount equal to the fair market value of the land underlying the Project (valued via independent appraisal as if the property were vacant land and were zoned the same as comparable use properties), less the actual Premium Costs allocated thereto, multiplied by six and one half percent (6.5%). The manner in which the appraisal will be conducted, as well as instructions to the appraiser and an illustration of same if performed in 2014, will be set forth in the Transaction Documents. Notwithstanding the foregoing, in no event shall (a) the Rent in the 70th Lease Year be less than ten percent (10%) more than the Rent for such Phase during the 69th Lease Year; or (b) notwithstanding that the Rent as of the 70th Lease Year cannot be less than ten percent (10%) more than the Rent for such Phase during the 69th Lease Year, the value of the land underlying any Phase, for purposes of the calculation of Rent in the 70th Lease Year, exceed $350 times the Allowable Square Footage in such Phase.

In the event that Developer does not take down one or more Phases, the $30,000,000 amount specified in clause 2. above shall be adjusted to be $30,000,000 times a fraction, the numerator of which is the Allowed Square Footage in the Phases that were taken down by Developer and the denominator of which is the Allowed Square Footage in the Project.

Examples of the calculation of the Rent Adjustments are contained in Exhibit D.

IV. LEASE TERM; REVERSION OF IMPROVEMENTS

The Lease term for the Phase 1 Lease will be 99 years, beginning with the date of Take Down of such Phase. The Lease terms for all other Phases in Parcel 4 will begin on the dates of Take Down for such Phases and end at the expiration of the Phase 1 Lease, estimated to be December 31, 2115, assuming a January 1, 2016 Take Down of Phase 1. The Lease terms for subsequent Phases will commence on the dates of Take Down for such Phases and end on the later of the expiration of the Phase 1 Lease or 89 years after the dates of Take Down for such Phases. At the end of each Lease term (i) all improvements on the Phase will revert to City and (ii) the tenant shall have an obligation to remove the improvements only to the extent they are in poor condition and repair (to be further defined in the DDA).

V. FINANCING

As provided in the Term Sheet, Developer expects to obtain public and private financing for the Project, including CFD financing, and City will cooperate and participate to the extent

provided in the Term Sheet. Should new public financing mechanisms become available via legislation or otherwise after the completion of the Transaction Documents, the Parties shall discuss the opportunities those may offer for financing of the Project. The ownership of the Tasman parcels is expected to contribute its fair share toward reimbursement of Developer for its costs in designing and constructing commonly used infrastructure, including a development fee to Developer to be negotiated. The Parties understand that this reimbursement obligation will be negotiated among City, Developer and such ownership.

VI. MISCELLANEOUS

A. The Lease tenants (or an association formed by them) will be the "owner" of all non-major internal streets and public spaces in the Project. Adjacent streets (Stars/Stripes, Great America, Tasman) and major interior streets in Parcel 4 will be owned by City.

B. As provided in Section VII.P of the Term Sheet, City will continue to own and be responsible for maintenance and operation of the Landfill; provided, however, that the Transaction Documents will include a mechanism for Developer to reimburse City for maintenance and operation of the Landfill above and beyond current costs up to a total annual Landfill maintenance and operation cost of One Million dollars ($1,000,000), with any amount over that being City's responsibility.

C. The reference in Section VII.B.5 of the Term Sheet to "City Center portion of the Project" means Phases 1 and 2.

D. Prior to commencement of construction on each Phase, Developer will advise City of its capital commitment to the Phase that is required by its lenders and/or partners for such Phase.

E. Developer desires to obtain an option to acquire the fee interest in the Property, from the platform up. City will consider granting such an option subject to reaching agreement on the timing and terms of the acquisition and determining that a true option may be granted to Developer. City shall also consider granting a fee interest in a portion of the property to a department store, hotel or office tenant that requires a fee interest as a condition to its participation in the Project.

F. As supplemented by this Supplement, the Term Sheet shall remain in full force and effect. In the event of an inconsistency between this Supplement and the Term Sheet, this Supplement shall control. This Supplement may be amended or supplemented only by an instrument in writing signed by both Parties and may be executed in counterparts. Each fully executed counterpart shall be deemed to be an original Supplement and all of such fully executed counterparts shall be deemed to be one and the same agreement.

By signing below, the Parties evidence their general agreement with the provisions of this Supplement and agree to use this Supplement and the Term Sheet as the framework for the good faith negotiations of binding definitive agreements. Any agreements resulting from negotiations would become effective only if and after such agreements have been considered and approved by City following compliance with all legally required procedures, and subject to the terms of Article I of the Term Sheet.

IN WITNESS WHEREOF, the undersigned have executed this Supplement as of _____, 2014.

DEVELOPER:

RELATED SANTA CLARA, LLC, a Delaware limited liability company

By: _____

Its: Stephen Eimer, VP
Authorized Signatory

CITY:

CITY OF SANTA CLARA, a municipal corporation

ATTEST:

By: _____

ROD DIRIDON, JR.
City Clerk

By: _____

JULIO J. FUENTES
City Manager

1500 Warburton Avenue
Santa Clara, CA 95050
Telephone: (408) 615-2210
Fax Number: (408) 241-6771

APPROVED AS TO FORM:

By:

_____

RICHARD E. NOSKY, JR.
City Attorney

List of Exhibits to Supplement

A	-	Current Configuration and Intended Use of Parcels and Phases
B	-	Take Down Timeframes
C	-	Premium Cost Categories
D	-	Examples of Calculation of Rent Adjustments
E	-	Copy of City Resolution

Exhibit A to Supplement

Current Configuration and Intended Use of Parcels and Phases

(Attached)

Exhibit A: Phasing Strategy

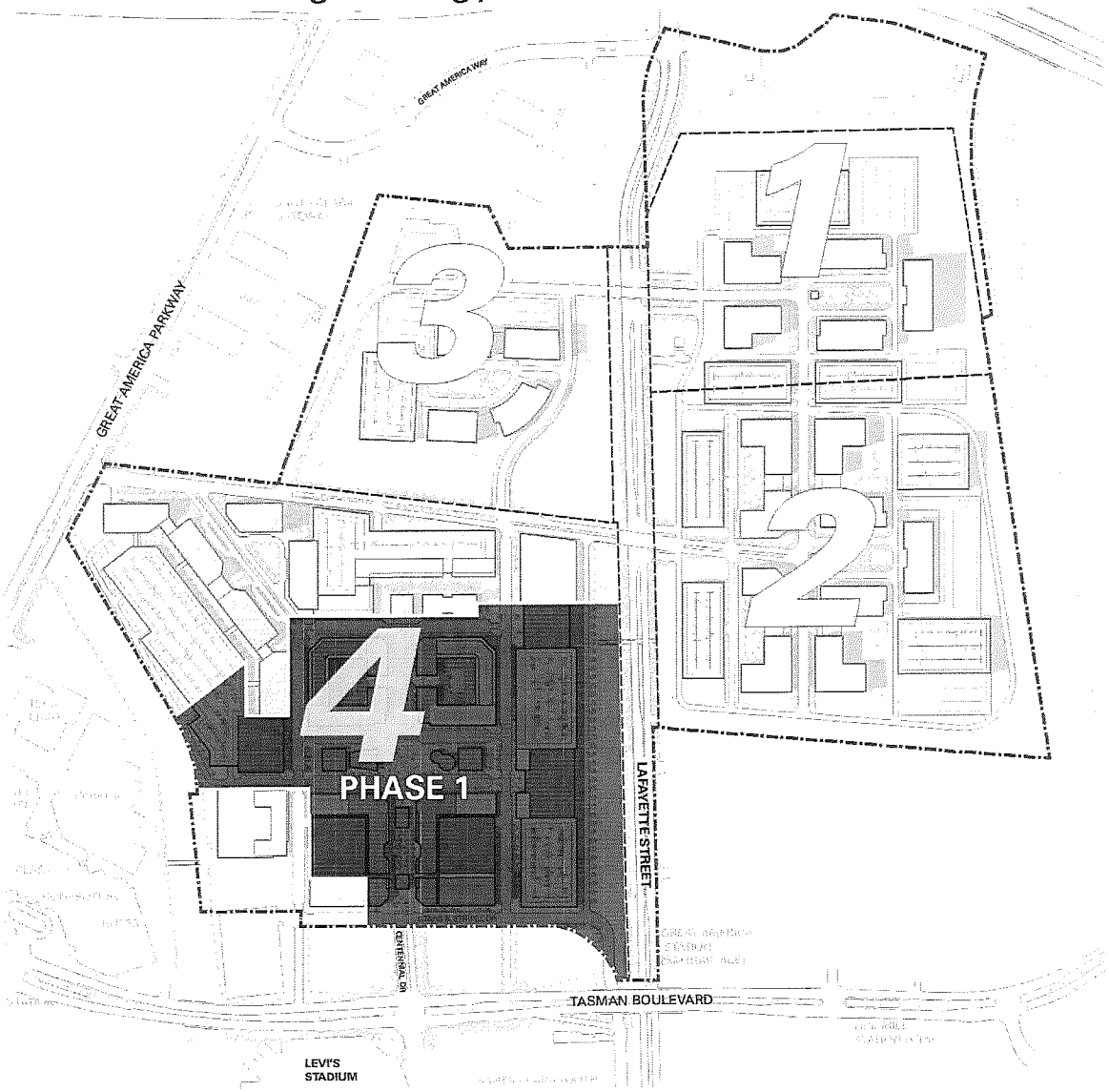

PHASE 1-Parcel 4

Acreage (Estimated)	*50*

Phase 1 GSF Constructed:	
Anchor/Mini Anchor	450,000
Inline Retail/F+B	450,000
Cinema/Entertainment	100,000
Total Retail	*1,000,000*
Office	200,000
Hotel	300,000
Total Phase 1 GSF	***1,500,000***
% of Total	19%

ENA Site Boundary
Development Parcels
Excluded from Development Site

0 50' 200" 400' 800"

Exhibit A: Phasing Strategy

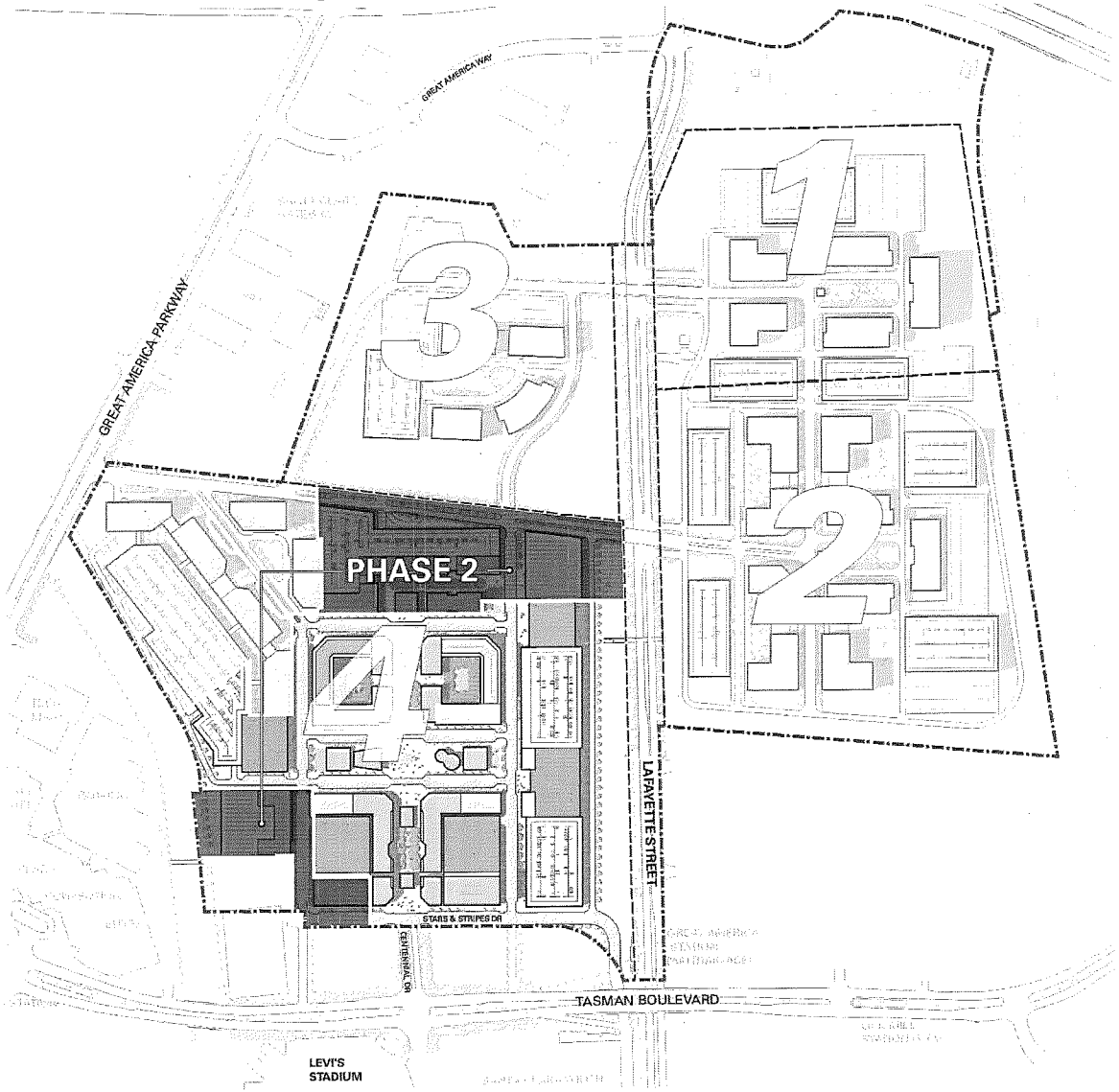

PHASE 2-Parcel 4

Acreage (Estimated)	*17*
Phase 2 GSF Constructed:	
Inline Retail/F+B	410,000
Cinema/Entertainment	50,000
Total Retail	*460,000*
Office	200,000
Serviced Apts/Residential Units	408,000
Total GSF	***1,068,000***
% of Total	13%

ENA Site Boundary
Development Parcels
Excluded from Development Site
Excluded from Development Site

0 50' 200' 400' 800'

Exhibit A: Phasing Strategy

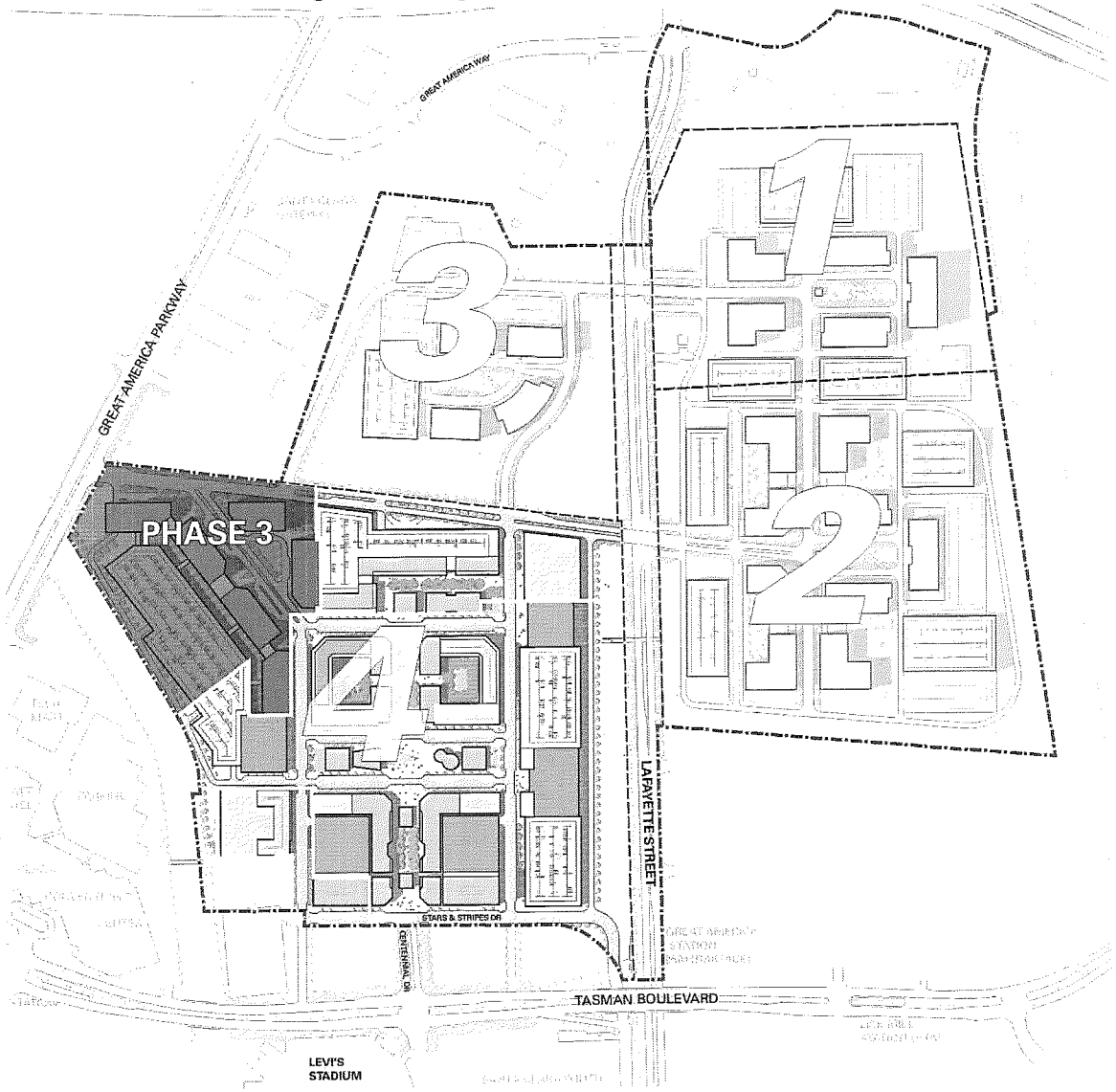

PHASE 3-Parcel 4

Acreage (Estimated)	22

Phase 3 GSF Constructed:

Office	1,264,000
Total GSF	***1,264,000***
% of Total	16%

ENA Site Boundary
Development Parcels
Excluded from Development Site

0 50' 200" 400' 800"

Exhibit A: Phasing Strategy

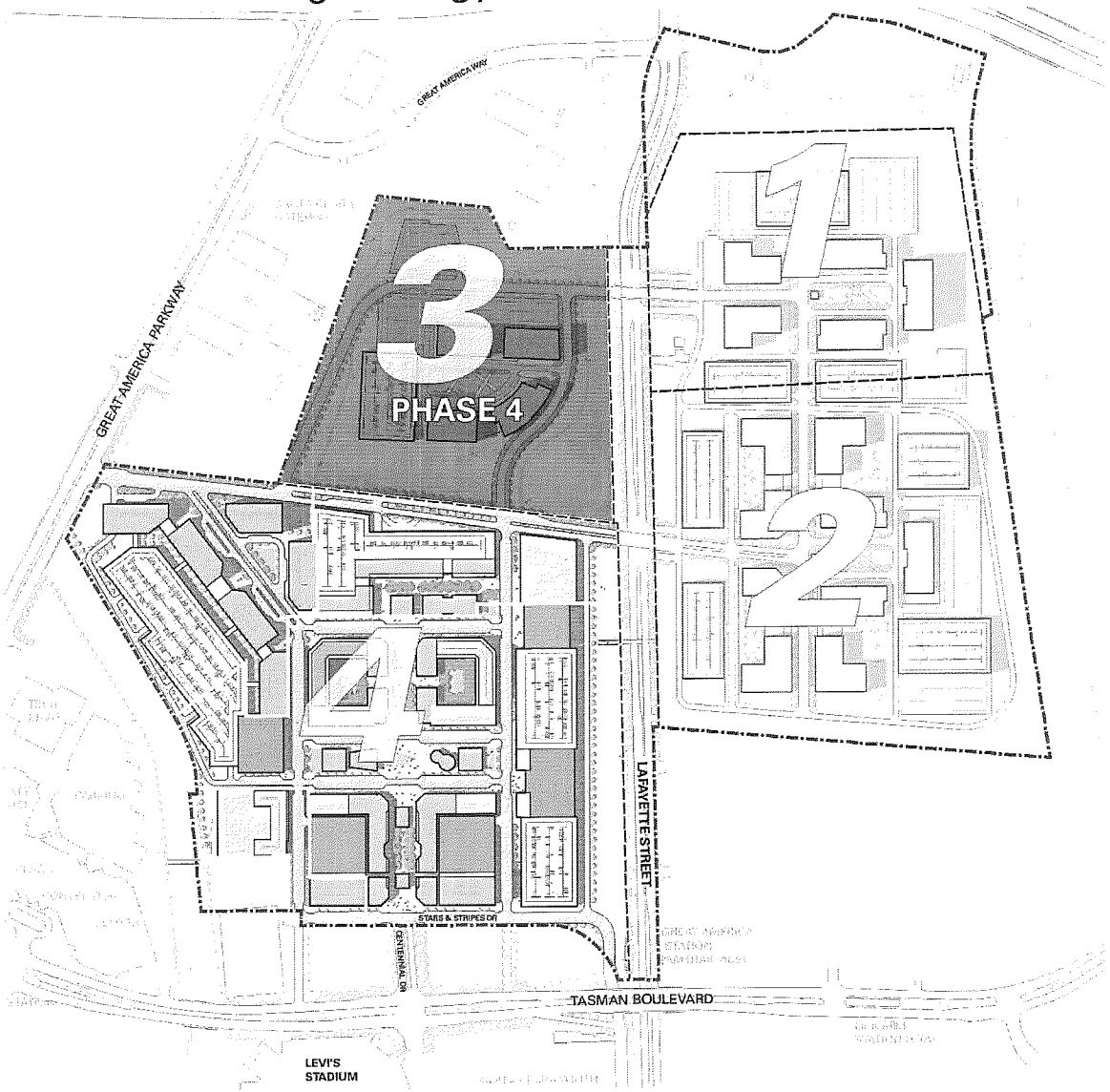

PHASE 4-Parcel 3

Acreage (Estimated)	*35*

Phase 4 GSF Constructed:

Office	720,000
Total GSF	***720,000***
% of Total	9%

ENA Site Boundary
Development Parcels
Excluded from Development Site

0 50' 200" 400' 800"

Exhibit A: Phasing Strategy

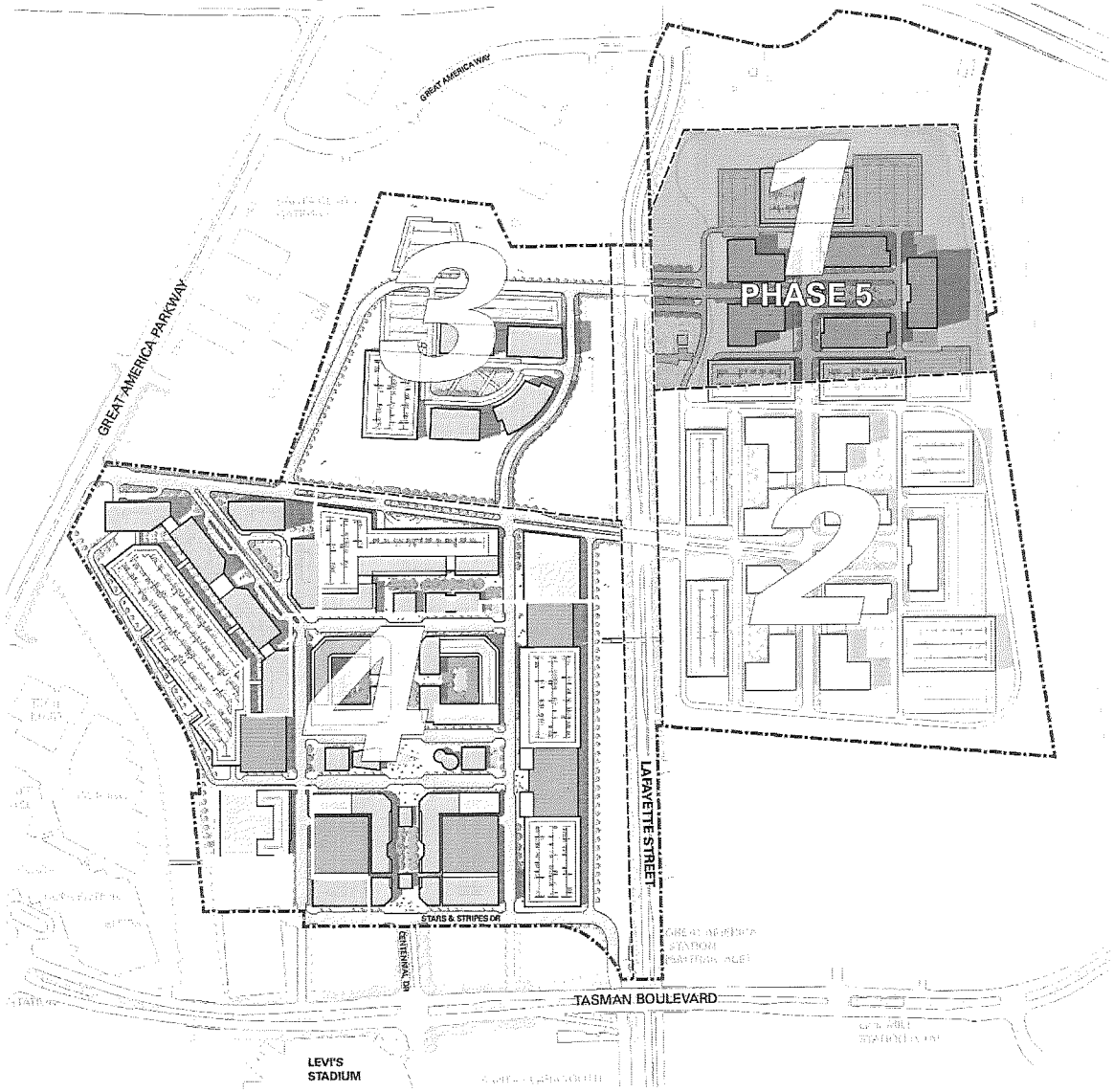

PHASE 5-Parcel 1

Acreage (Estimated)	*36*

Phase 5 GSF Constructed:

Office	1,200,000
Total GSF	**1,200,000**
% of Total	15%

ENA Site Boundary
Development Parcels
Excluded from Development Site

0 50' 200" 400' 800"

Exhibit A: Phasing Strategy

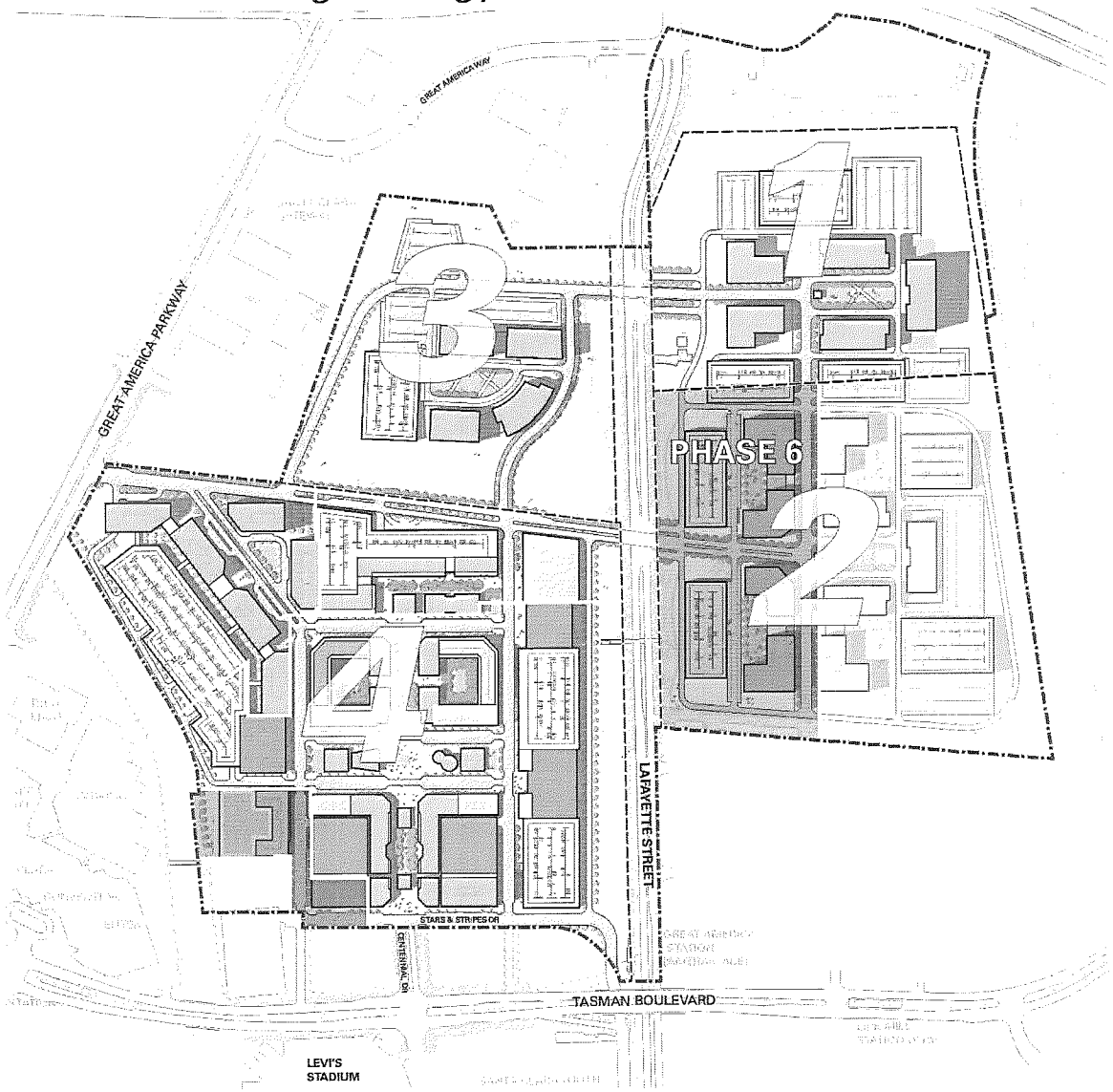

PHASE 6-Parcel 2

Acreage (Estimated)	*27.5*

Phase 6 GSF Constructed:

Office	1,080,000
Total GSF	***1,080,000***
% of Total	14%

ENA Site Boundary
Development Parcels
Excluded from Development Site

0 50' 200" 400' 800"

Exhibit A: Phasing Strategy

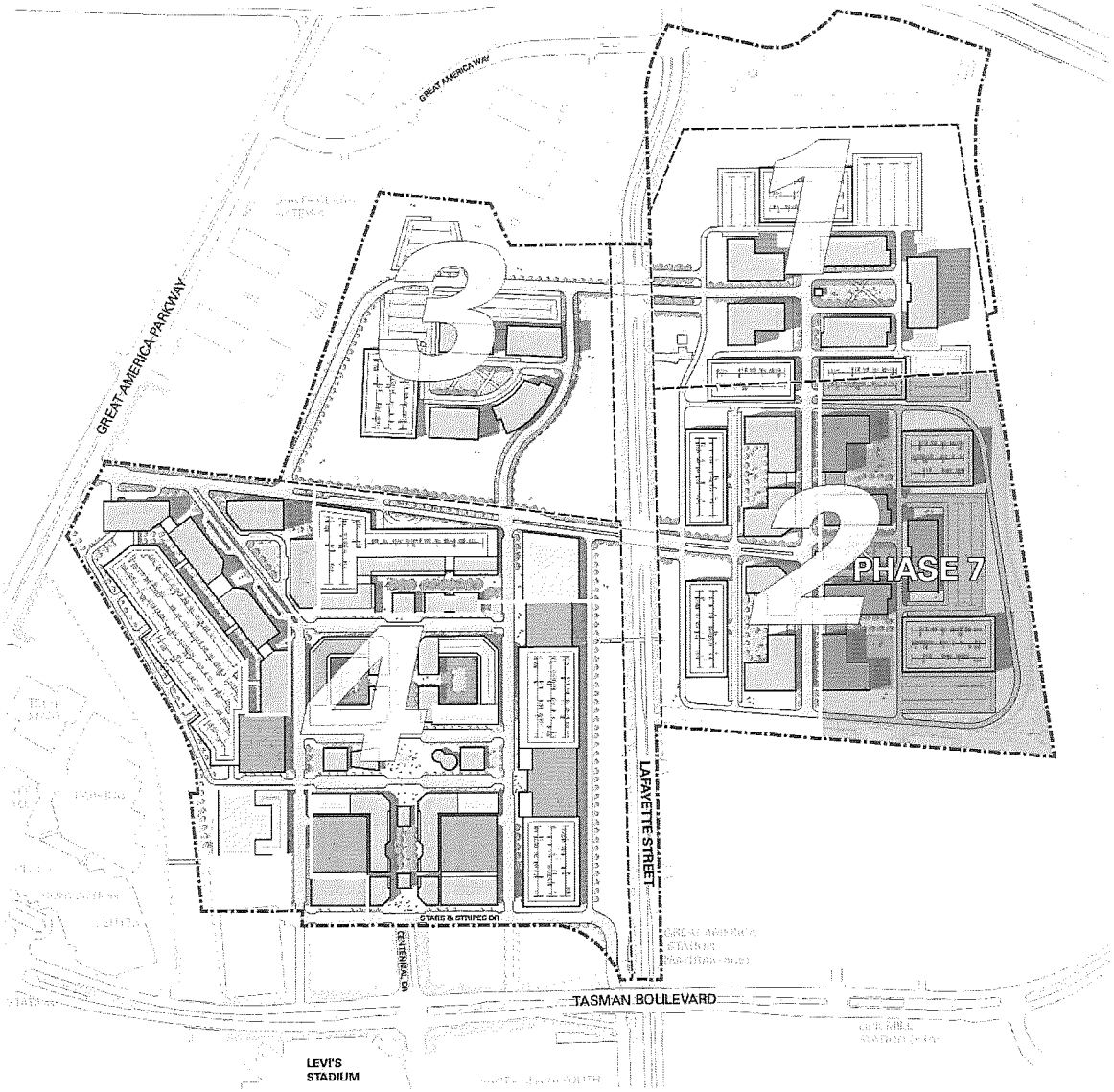

PHASE 7-Parcel 2

Acreage (Estimated)	*27.5*

Phase 7 GSF Constructed:

Office	1,080,000
Total GSF	***1,080,000***
% of Total	14%

ENA Site Boundary
Development Parcels
Excluded from Development Site

0 50' 200' 400' 800'

Exhibit A: Phasing Strategy

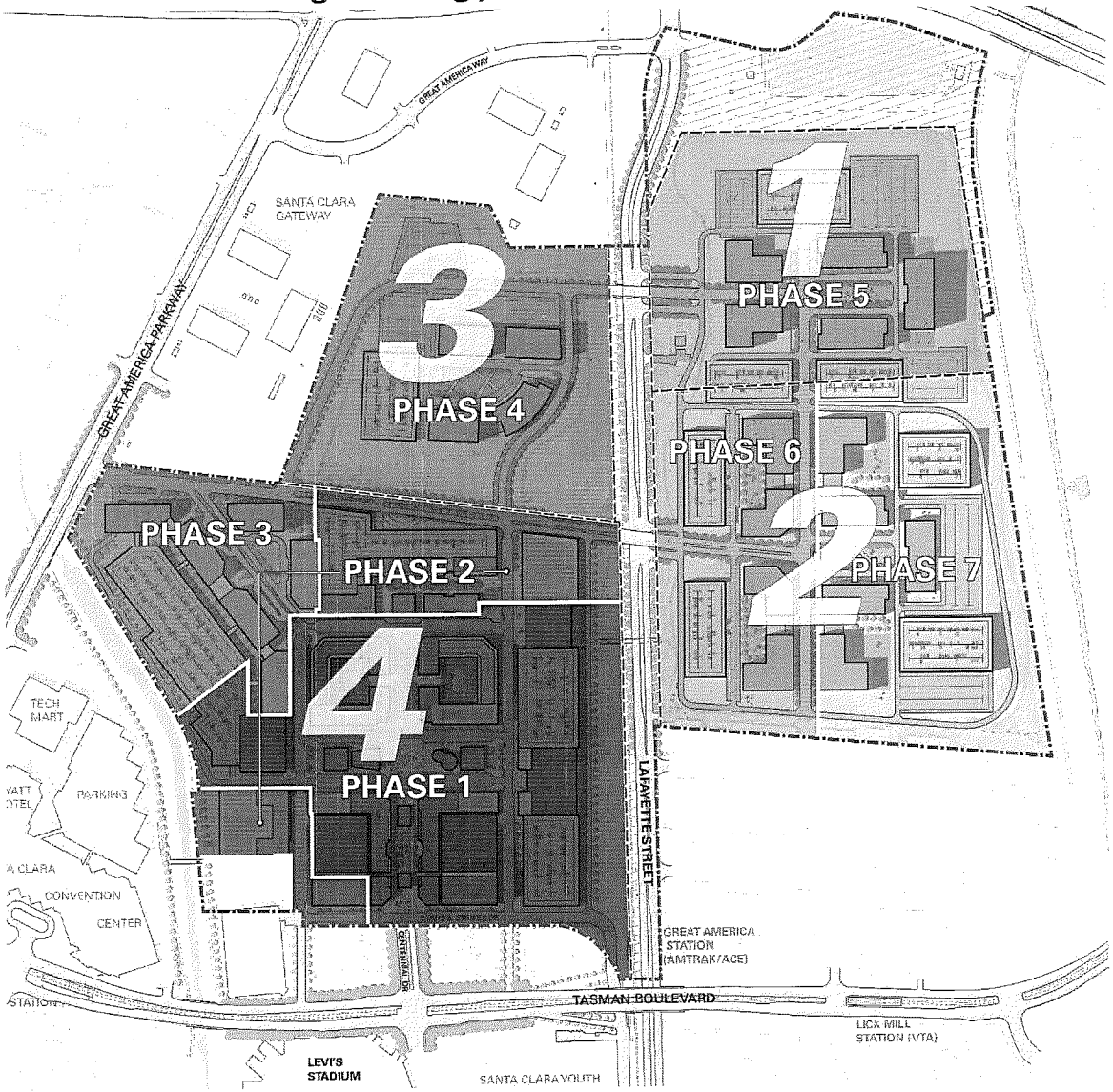

ALL PHASES

Acreage (Estimated)	*215*
Buidling GSF Constructed:	
Parcel 4:	
Anchor/Mini Anchor	450,000
Inline Retail/F+B	860,000
Cinema/Entertainment	150,000
Total Retail	*1,460,000*
Office	1,664,000
Hotel	300,000
Serviced Apts/Residential Units	408,000
Total Parcel 4	**3,832,000**
Total Parcel 3 - Office	**720,000**
Total Parcel 2 - Office	**2,160,000**
Total Parcel 1 - Office	**1,200,000**
Total GSF	***7,912,000***
% of Total	100%

ENA Site Boundary
Development Parcels
Excluded from Development Site

0 50' 200" 400' 800"

Exhibit B to Supplement

Take Down Timeframes

Phase	Required Take Down Date	Construction Start, subject to Force Majeure
1	December 2017 Subject to Force Majeure	Within 2 years after Take Down
2	4 years after Phase 1 Take Down	Within 1 year after Take Down
3	5 years after Phase 2 Take Down	Within 1 year after Take Down
4	3 years after Phase 3 Take Down	Within 2 years after Take Down
5	3 years after Phase 4 Take Down	Within 2 years after Take Down
6	2 years after Phase 5 Take Down	Within 2 years after Take Down
7	2 years after Phase 6 Take Down	Within 2 years after Take Down

EXHIBIT C
CITY PLACE SANTA CLARA
Preliminary Premium Cost Categories

PRELIMINARY ESTIMATE OF HARD COSTS

Premium Off Site large development	**$109,900,000**
Premium On Site large development	**51,500,000**
Landfill Premium	**432,000,000**
Premium engineering	**6,000,000**
Miscellaneous	**600,000**
	$600,000,000

COST CATEGORIES

OFF SITE

1. Demolition
2. Site Prep/Grading
3. Paving
4. Incoming Power
5. Gas to property line
6. Water to property line
7. Communication infrastructure
8. Upgrade existing sanitary pump stations
9. Storm drain
10. Relocate existing utilities
11. Street light infrastructure
12. Additional traffic impact costs/fees
13. Contribution/costs associated with development site access (free and clear title issues)
14. Third party design and engineering costs for above items

ON SITE

1. Demolition
2. Mass excavation and grading
3. Perimeter roads
4. Main utility distribution
5. Traffic signals
6. Site retaining wall associated with larger grade changes
7. Third party design and engineering costs for above items

LANDFILL PREMIUM

1. Foundation Premiums
2. Methane gas monitoring and collection systems
3. Demolition and replacement of existing gas, leachate and ground water collection systems
4. Repair and establish clay cap
5. Parcel 4 settlement slab
6. Interstitial utility space under buildings
7. Perimeter building settlement walls
8. Utility premiums; settlement vaults, flex connections, special support structures, trench liners.
9. Special supports for site improvements
10. Additional base rock under asphalt paving
11. Refuse handling, relocation and disposal
12. Third party design and engineering costs including premium engineering for above items

Exhibit D to Supplement

Examples of Calculation of Rent Adjustments

Example of Lease Year 45 fair market value increase outlined in Section III (B)(2), subject to the minimum Rent increase provided for in Section III (B)(2)(a) and (b):

(i) (fair market value of land [capped at $200 per Allowable Square Footage]) LESS (Premium Costs) = (adjusted land value)

(ii) (adjusted land value) X (6.5% lease rate) = Ground Rent

Example of Lease Year 70 fair market value increase outlined in Section III(B)(3), subject to the minimum Rent increase provided for in Section III (B)(3)(a):

(i) (fair market value of land [capped at $350 per Allowable Square Footage]) LESS (Premium Costs) = (adjusted land value)

(ii) (adjusted land value) X (6.5% lease rate) = Ground Rent

Exhibit E to Supplement

City Resolution

(attached)

AMENDMENT NO. 1 TO
EXCLUSIVE NEGOTIATING RIGHTS AGREEMENT
(APNS 097-01-039; 097-01-073; 104-01-102; and 104-03-036)

This Amendment No. ____ to Exclusive Negotiating Rights Agreement (this "**Amendment**") is entered into as of this __ day of _____, 2014 by and between the City of Santa Clara (the "**City**") and Related Santa Clara, LLC, a Delaware limited liability company (the "**Developer**"), on the basis of the following facts:

RECITALS

A. The City and the Developer entered into an Exclusive Negotiating Rights Agreement dated as of April 9, 2013 (as previously amended, the "**Original ENA**"), and now desire to amend the Original ENA as provided below. Capitalized terms used in this Amendment without definition shall have the meanings given to such terms in the Original ENA.

B. The City is the owner of four parcels of real property in the City of Santa Clara (APNS 097-01-039; 097-01-073; 104-01-102; and 104-03-036), as shown on the map attached to the Original ENA.

AGREEMENT

NOW, THEREFORE, in consideration of the mutual covenants and promises contained herein and for other valuable consideration, the receipt and sufficiency of which are hereby acknowledged, the parties mutually agree as follows:

1 Section 2 of the Original ENA is hereby amended to read in full as follows:

2. Negotiating Period. The Negotiating Period under this Agreement shall begin on April 9, 2013 and shall end on March 15, 2016 (as it may be extended from time to time as provided below, the "**Negotiating Period**"). If the City and Developer execute the DDA and the DA before the end of the Negotiating Period, the end of the Negotiating Period shall be automatically extended until five (5) business days after the last day on which a legal challenge to approval of the DDA, the DA, the EIR or other Project approvals given at approximately the same time as the DDA is approved (collectively, "Project Approvals") may be filed. If such a legal challenge is timely filed, the Negotiating Period shall be automatically extended until the earlier of (1) the effectiveness of the Project Approvals shall have been finally settled or upheld by a final, unappealable decision of the California courts without any material adverse effect on the Project Approvals or (2) ninety (90) days following such final settlement or unappealable decision that does not uphold the effectiveness of the Project Approvals as provided in clause (1). The Negotiating Period may also be extended for an additional two periods of six (6) months each upon presentation of a written request from the Developer together with a schedule of tasks to be accomplished during the additional period, at the discretion of the City Manager.

The Negotiating Period may be further extended or modified only by formal amendment of this Amendment executed by the City and the Developer.

2 Section 16 of the Original ENA is hereby amended to read in full as follows:

16. Site Access. The Developer and the City will enter into a separate agreement or agreements to provide the Developer, its consultants, lenders, investors and/or agents with the right to enter, examine and conduct tests on the Property, including the right to utilize the Property for purposes of promoting the Project and related activities; provided, that such access shall not interfere in any material respect with other uses of the Property that are the subject of written agreements between the City and third parties and shall be subject to such customary provisions (including the provision of liability insurance protecting the City) as the City may reasonably require.

3 The Term Sheet represents the positions of the Parties to date on the subject matter thereof. However, it does not supersede the rights of the Parties under the ENA, as amended. As amended herein, the Original ENA shall remain in full force and effect.

[REMAINDER OF PAGE INTENTIONALLY LEFT BLANK]

//

//

//

//

//

//

//

IN WITNESS WHEREOF, the undersigned have executed this Term Sheet as of _____, 2014.

DEVELOPER:

RELATED SANTA CLARA, LLC, a Delaware limited liability company

By: _____

Its: Stephen Eimer, VP
Authorized Signatory

CITY:

ATTEST:

CITY OF SANTA CLARA, a chartered municipal corporation

By: _____

ROD DIRIDON, JR.
City Clerk

By: _____

JULIO J. FUENTES
City Manager

1500 Warburton Avenue
Santa Clara, CA 95050
Telephone: (408) 615-2210
Fax Number: (408) 241-6771

APPROVED AS TO FORM:

By: _____

RICHARD E. NOSKY, JR.
City Attorney

Meeting Date: 7/1/14

AGENDA REPORT

City of Santa Clara, California

Agenda Item # 6A-1

Date: June 17, 2014

To: City Manager for Council Action

From: Director of Electric Utility

Subject: Approval for Use of City Forces, Electric Department Estimates

EXECUTIVE SUMMARY:

It is requested that the City Council find that City Forces, supplemented by Public Works and Contract Labor, if necessary, can best perform the installation of the following electric facilities and approve the use of City Forces, therefore:

Estimate No:	33540
Title/Location	Temporary Power for Sales Trailer for The Gallery at Central Park, 920 Kiely Boulevard
Type of Job:	New Business
Description of Work:	Install 300' 1/0 AL underground secondary cable and connect customer service. Install 200 amp 3-phase meter.

Estimated Cost:	$6,261.15	Customer/Developer Contribution:	$	5,842.25
		Salvaged Plant	$	418.90
		Customer Service Charge	$	.00

RECOMMENDATION:

That Council approve the use of City Electric forces for the installation of facilities at 920 Kiely Boulevard;

for John C. Roukema
Director of Electric Utility

APPROVED

Julio J. Fuentes
City Manager

Documents related to this report: None

Meeting Date: 7/1/14

AGENDA REPORT

City of Santa Clara, California

Agenda Item # 6A-2

Santa Clara All-America City 2001

Date: June 20, 2014

To: City Manager for Council Action

From: Director of Electric Utility

Subject: Acceptance of Notice of Completion for Contract 2116C for Project A – De La Cruz Junction Railroad Undercrossing and Project B – Kenneth Substation Offsite Storm Drain Force Main

Contractor: Ranger Pipelines, Inc.
1790 Yosemite Avenue
San Francisco, CA 94124

EXECUTIVE SUMMARY:
On April 9, 2013 Council awarded Contract 2116C for Project A – De La Cruz Junction Railroad Undercrossing and Project B – Kenneth Substation Offsite Storm Drain Force Main to Ranger Pipelines, Inc. Ranger Pipelines, Inc. has completed all the work under this contract to the satisfaction of the City.

ADVANTAGES AND DISADVANTAGES OF ISSUE:
Acceptance of the contract as complete will allow for the thirty five (35) day retention release to begin. There are not disadvantages of this issue.

ECONOMIC/FISCAL IMPACT:
There is no additional cost to the City other than staff time and expense.

RECOMMENDATION:
That Council accept the work performed by Ranger Pipelines, Inc., for Project A – De La Cruz Junction Railroad Undercrossing and Project B – Kenneth Substation Offsite Storm Drain Force Main Construction Project (Contract 2116C) as complete, and authorize the recordation of a Notice of Completion with the County Recorder.

John C. Roukema
Director of Electric Utility

APPROVED:

Julio J. Fuentes
City Manager

Documents Related to this Report:

Meeting Date: 7/1/14

AGENDA REPORT

City of Santa Clara, California

Agenda Item # 6A-3

Date: June 17, 2014

To: City Manager for Council Action

From: Director of Finance/Assistant City Manager

Subject: Annual Report on Tourism Improvement District by Santa Clara Chamber of Commerce and Convention-Visitors Bureau (SCCC-CVB)

EXECUTIVE SUMMARY:

This is the ninth annual report by the Santa Clara Chamber of Commerce and Convention-Visitors Bureau on the use and impact of the revenues collected from the Tourism Improvement District (TID).

- City Council approved the TID in December 2004, to collect a $1.00 fee on each occupied hotel/motel room in the nine hotels near the Santa Clara Convention Center: Hilton, Hyatt Regency, Marriott, Biltmore, Embassy Suites, Plaza Suites, Avatar, Hyatt House, and TownePlace Suites by Marriott.
- The intent of the TID is to allow the hotels to supplement their marketing and sales activities.
- The hotels began to collect the TID assessment on February 14, 2005.
- Collections have been as follows:

FY2004-05 (Feb-Jun)	$71,362
FY2005-06	$610,682
FY2006-07	$634,484
FY2007-08	$614,307
FY2008-09	$584,887
FY2009-10	$545,423
FY2010-11	$633,201
FY2011-12	$668,455
FY2012-13	$715,574
FY2013-14	$741,347
Total Since Inception	$5,819,722

- The SCCC-CVB forecast for 2014-15 program funding is over $848,000.
- The TID Advisory Committee directs the spending of the TID funds. The attached report outlines the results for fiscal year 2013-14.

ADVANTAGES AND DISADVANTAGES OF ISSUE:

The SCCC-CVB Annual TID report provides current information on the impact of the City Council approved TID for the sales and marketing of the City's convention center facilities and programs.

ECONOMIC/FISCAL IMPACT:

There is no cost to the City other than administrative staff time and expense.

RECOMMENDATION:

That the Council accept the Santa Clara Chamber of Commerce and Convention-Visitors Bureau Tourism Improvement District Annual Report for the 2013-14 fiscal year, as submitted by the Santa Clara Chamber of Commerce and Convention-Visitors Bureau.

Gary Ameling
Director of Finance/Assistant City Manager

APPROVED:

Julio J. Fuentes
City Manager

Documents Related to this Report:
1) Letter / Report dated May 7, 2014, to Mayor and Council from SCCC-CVB

SANTA CLARA
SILICON VALLEY CENTRAL®
CHAMBER OF COMMERCE & CONVENTION – VISITORS BUREAU

May 7, 2014

The Honorable Mayor and City Council
City of Santa Clara
1500 Warburton Avenue
Santa Clara, CA 95050

Dear Mayor and City Council,

Following is a report on the Santa Clara Tourism Improvement District's (TID) FY 2013-14 activities and FY 2014-15 goals.

Established in 2004, the Tourism Improvement District (TID) was created as a marketing revenue supplement to assist the Santa Clara Convention and Visitors Bureau (SCCVB) with the marketing of the City of Santa Clara to hotel/convention center groups and visitors.

Each participating hotel is assessed $1.00 per occupied room night. This assessment funds the TID. The TID is composed of nine (9) Santa Clara hotels that surround the Santa Clara Convention Center. They include the Avatar Hotel, Biltmore Hotel & Suites, Embassy Suites, Hilton Santa Clara, HYATT house, Hyatt Regency, Marriott Santa Clara, The Plaza Suites, and TownePlace Suites by Marriott. Since the inception of the TID on February 14, 2005, the District has provided over $5.819 million in additional funding to the SCCVB which further supports the marketing of the hotels and Convention Center.

The goal of the Advisory Board is to determine how to spend the TID funds and to maximize the return on investment. Each TID hotel holds a seat on the Advisory Board as a voting member and directs the spending of the TID funds. The President and CEO and staff of the Santa Clara Chamber of Commerce and Convention-Visitors Bureau are participants on the Advisory Board as non-voting members.

The TID Advisory Board and the SCCVB staff has accomplished the below during FY 2013-14:

Convention Marketing & Sales

- Provided over $87,950 in advertising and marketing money to promote the City of Santa Clara as a convention and meeting destination
- Continued to implement an electronic targeted advertising campaign and brand image for the City of Santa Clara and our hotel partners
- Funded $66,650 to attend trade shows, conferences, special events, city-wide bid presentations and sales trips
- Set aside over $133,000 to provide subsidy money to groups such as the CA Water Environment Association, Christian Congregation of Jehovah's Witness, XRX-Stitches, Bay Area Christian Church, CA Distributive Education Clubs of America, Northern CA Volleyball Association, World Wrestling Entertainment (WWE), Society of Vacuum Coaters, Technology Services Industry Association and several others resulting in thousands of future hotel room nights for the City of Santa Clara
- Increased Hotel/Convention group leads by **29%**YTD; hotel in-house sleeping room night bookings YTD by **205%** and holiday /weekend group in-house sleeping room night bookings by **70%**

Visitor Marketing

- Provided Leisure Advertising funding of $136,450 to promote the City of Santa Clara as a leisure destination
- Produced three new Santa Clara destination videos and XPlorIT Interactive multi-media
- Increased hotel weekend room night bookings through leisure print and electronic advertising in the Sacramento and Fresno Bee
- Produced new Hotel/California's Great America Weekend Packages web page
- Maintained advertising presence in California's Official Visitors Guide
- Increased online presence with Google PPC advertising
- Produced eBlasts sent to "Opt in" users featuring Santa Clara travel information
- Increased "Visit Santa Clara" Social Media presence on Facebook, Twitter, Instagram, Google +, YouTube, Pinterest, Trip Advisor, & LinkedIn
- Hosted Pacific Rim receptive tour operator event highlighting "What's New in Santa Clara"

Financial/Operational

- Contributed over $252,000 to support three employees plus benefits for the SCCVB
- Funded a $30,000 incentive program to the CVB sales management team

For FY 2014-15, the TID Advisory Board has directed the Santa Clara CVB to focus on the below areas:

- Market and sell Santa Clara as an overnight destination for the economic benefit of the community
- Enhance the City of Santa Clara's position as a viable meetings/convention and leisure destination and improve the overall awareness and perception of the destination
- Increase hotel occupancy and utilization of the Santa Clara Convention Center
- Continue direct sales effort specifically targeting, sports and city-wide groups, short term business, weekend and holiday need period business and leisure, along with a variety of weekend packages and holiday packages
- Update Santa Clara destination videos and produce new hotel content
- Continue to upgrade technology systems when necessary to compete more effectively
- Continue to provide staffing support for three SCCVB employees
- Provide research funding to keep current with marketing trends and to monitor overall performance of the TID
- Continue development of Santa Clara Sports Group (SCSG)
- Develop weekend and holiday packages for individual consumers and families
- Improve the overall awareness and perception of the City of Santa Clara as a meeting and leisure destination through long range strategic advertising & promotions with special focus on online and social media channels
- Drive city-wide convention center corporate, association & SMERF type "A" business to the City of Santa Clara, the Santa Clara Convention Center and our Santa Clara hotel properties
- Continue to revitalize the SMERF/Association "need period" sales strategies to drive business to the Santa Clara hotels and Santa Clara Convention Center. [Need period business is considered to be (in order of priority) the last two weeks in November; last two weeks in December; first two weeks in January; all holidays; June, July and August; and weekend business]
- Commit sufficient destination funding for advertising/marketing for the FY 2014-15 with emphasis on online opportunities

- Commit to fund additional trade shows, sales calls, special events and industry sponsorship opportunities
- Provide funding to explore new business opportunities and keep current with marketing trends
- Provide the CVB sales managers with an incentive opportunity of up to $30,000 for "need period" business
- Continue in-house/convention center & leisure marketing of Santa Clara as a weekend and holiday destination
- Continual improvement of marketing to the meeting planner online. Constant monitoring, maintenance and redevelopment of the site to increase online Requests for Proposals
- Budget a minimum of $ 150,000 for future subsidy opportunities for financing aspects of events and to stay competitive with other cities

Our ninth year of operation has been extremely productive and successful. In FY 2014-15, the TID program funding will be over $848,619. We are confident that we will continue to see increases in bookings and revenue for the hotels and Convention Center which in turn will provide growth in sales tax and hotel transient occupancy tax revenues for the City.

We thank you for your continued support of the Tourism Improvement District and the activities of the Santa Clara Convention and Visitors Bureau and the Convention Center.

Sincerely,

Erich Smith
Chair of the TID Advisory Board

Steve Van Dorn
President & CEO

cc: Julio Fuentes, City Manager
Rod Diridon, Jr., City Clerk
Gary Ameling, Director of Finance
David Andre, Vice President of Marketing and Communications
Barbara Carlisle, Vice President of Finance & Operations
Annette Manhart, Vice President of Convention Sales, Marketing and Services

Meeting Date: 7/1/14

AGENDA REPORT

City of Santa Clara, California

Agenda Item # 6A-4

Date: June 17, 2014

To: City Manager for Council Action

From: Director of Water and Sewer Utilities

Subject: Approval of Plans and Specifications
Northside Tanks Site Improvements Project (WA 30148)

EXECUTIVE SUMMARY:

The City of Santa Clara Water Utility owns, operates, and maintains six at-grade potable water storage tanks. These tanks are an integral part of the City's overall potable water distribution system, providing reliability and fire protection for the City. Two of these tanks, Northside Tanks 1 and 2 (Tanks), are welded steel storage tanks built in 1978 and 1984, respectively with a capacity of 4.7 million gallons each.

The Northside Tanks Site Improvements Project (Project) will reconfigure the piping connecting the various water system components to comply with current regulations. The project will improve emergency fire flow capability by removing the single propane-fueled pump and installing a larger diesel-fueled standby generator. This will enable the remaining four electric water pumps to operate during power interruptions. The existing pump house will facilitate a new motor control center, automatic transfer switch, and electrical equipment to improve electrical safety at the site. In addition, more instrumentation will be installed to provide additional remote monitoring and control capability, as well as improved operation and data reporting.

Plans and specifications for the Project are complete and are available in the City Clerk's Office for review during normal business hours. Approval of the Project plans and specifications and authorization to advertise for bids, will put the project on schedule for bid acceptance and opening in August 2014.

ADVANTAGES AND DISADVANTAGES OF ISSUE:

Target date for Project completion is February 2015, before the burrowing owl nesting season. The Project will improve water quality and reliability, and increase the usable water storage in the tanks. The new piping modifications allow for each of the two tanks to be filled and more efficiently drained, independently or simultaneously; provide additional pipelines for redundancy; and increase flexibility for supplying water to the different system pressure zones.

ECONOMIC/FISCAL IMPACT:

Funds are available in the Capital Improvement Budget: Northside Tank Site Improvements Project (592-1423-80300-7055).

RECOMMENDATION:

That the Council:

1. Approve the plans and specifications for the Northside Tanks Site Improvements Project;
2. Authorize the City Manager to make minor modifications, if necessary; and
3. Authorize the advertisement for bids.

Christopher L. de Groot
Director of Water and Sewer Utilities

APPROVED:

Julio J. Fuentes
City Manager

Documents Related to this Report:
Specifications and Contract Documents for Northside Tanks Site Improvements

I:\Water\CAD\AutoCad Drawings\Job Drawings\Northside Tanks Site Improvements (J30148W)\Approval of NST Tanks Site Improvements Plans and Specs.doc

DOCUMENT 00001

TITLE PAGE

CITY OF SANTA CLARA, CALIFORNIA

1500 WARBURTON AVENUE
SANTA CLARA, CALIFORNIA 95050

PROJECT MANUAL

FOR THE

CONSTRUCTION OF

NORTHSIDE TANKS SITE IMPROVEMENTS PROJECT

END OF DOCUMENT

THIS PAGE

WAS INTENTIONALLY

LEFT BLANK

DOCUMENT 00010

TABLE OF CONTENTS

The following sections below are included in this volume. All sections of Divisions 0, 1, and 2, unless specifically indicated as "NOT USED", shall apply to and be included as terms of these Specifications and Agreement. Bidders agree to be bound by all such terms by submitting Bid Documents.

DIVISION	DOCUMENT	TITLE
0		GENERAL PROVISIONS
		Introductory Information
	00001	Title Page
	00010	Table of Contents
	00020	Project Team
	00030	Seals
	00040	List of Drawings
	00050	References and Definitions
		Bidding Requirements
	00100	Notice Inviting Bids
	00200	Instructions to Bidders
	00210	Indemnity and Release Agreement
	00250	Bid Contents, Evaluation, Selection and Award
	00320	Geotechnical Data and Existing Conditions
	00340	Hazardous Materials Surveys
	00400	Bid
	00411	Bidder's Bond
	00420	Bidder Registration and Safety Experience
	00421	Declaration of Contractor's License Status
	00430	Subcontractors List
	00435	Principals Interested in this Bid
	00440	Affidavit of Compliance with Ethical Standards of Contractor
	00441	Ethical Standards for Contractors
	00450	Statement of Qualifications for Construction Work
	00460	Schedule of Major Equipment and Materials Suppliers
	00481	Non-collusion Affidavit
	00482	Bidder Certifications
	00490	Addenda (Sample)

Contract Forms

00510	Notice of Award
00520	Agreement
00550	Notice to Proceed
00610	Construction Performance Bond
00620	Construction Labor and Materials Payment Bond
00630	Guaranty
00650	Agreement and Release of Any and All Claims
00654	Workers' Compensation Insurance Statement
00660	Substitution Request
00670	Escrow Bid Documents
00680	Escrow Agreement for Security Deposits in Lieu of Retention
00690	Public Works Contract Change Order (Sample)

Conditions of the Contract

00700	General Conditions
00810	Supplementary Conditions – Hazardous Materials
00820	Insurance Requirements
00830	Apprenticeship Program

DIVISION	SECTION	TITLE
1		GENERAL REQUIREMENTS
	01100	Summary of Work
	01100SP	Summary of Work
	01130	Alternates
	01200	Measurement and Payment
	01250	Modification Procedures
	01315	Project Meetings
	01320	Progress Schedules and Reports
	01330	Submittal Procedures
	01410	Regulatory Requirements
	01411	Regulatory Requirements – Hazardous Materials
	01450	Testing and Inspection
	01500	Temporary Facilities and Controls
	01540	Site Security and Safety
	01580	Project Identification Signs
	01590	City Mitigation Measures
	01600	Product Requirements
	01715	Existing Underground Facilities
	01740	Cleaning
	01770	Contract Closeout
	01780	Project Record Documents

Note: For the purpose of assisting users of the Technical Provisions in making cross-references to the Caltrans Standard Specifications when necessary, the City has maintained a degree of consistency and continuity in the numbering system of the Technical Provisions. The numbering sequence for the Technical Provisions is intended to include the corresponding Caltrans Standard Specifications Section numbers as the last two digits in each respective Section number of the Technical Provisions.

DIVISION	SECTION	TITLE
2		TECHNICAL PROVISIONS
	02005	Trench and Excavation Safety
	02007	Storm Water Pollution Prevention
	02010	Site Conditions and Dust Control
	02016	Clearing and Grubbing
	02019	Earthwork
	02020	Landscaping and Irrigation
	02024	Lime Stabilization
	02026	Aggregate Base
	02027	Cement Stabilization
	02037	Bituminous Seals
	02039	Asphaltic Concrete Pavement, Resurfacing, and Berms
	02040	Portland Cement Concrete Pavement
	02050	Demolition
	02062	Furnishing and Installing Pipe
	02070	Storm and Sanitary Sewer Manholes, Drainage Structures, and Miscellaneous Structures
	02071	Water Mains and Services
	02071SP	Water Mains and Services
	02073	Portland Cement Concrete Curb, Gutter, Sidewalk, Walkway, Curb Ramp, and Driveway
	02083	Redwood Headers and Barricades
	02084	Traffic Stripes, Pavement Marking, and Pavement Markers
	02086	Signals, Lighting, and Electrical Systems
	02863	Sound Barriers
3		
	03100	Concrete Formwork
	03150	Concrete Accessories
	03200	Concrete Reinforcement
	03300	Cast-In-Place Concrete
	03480	Precast Concrete Utility Structures
5		
	05090	Anchorage in Concrete
	05100	Structural Steel and Miscellaneous Metal
	05400	Cold-Formed Metal Framing
7		
	07210	Thermal Insulation
	07468	Metal Siding
	07600	Flashing and Sheet Metal
	07613	Manufactured Sheet Metal Roofing
	07950	Expansion Joint Cover Assemblies

8		
	08114	Standard Steel Doors
	08115	Standard Steel Frames
	08710	Door Hardware
9		
	09260	Gypsum Board Assemblies
	09900	Painting and Coating
	09910	Painting and Coating for Water Utilities
10		
	10210	Wall Louvers
	10523	Fire Extinguishers
13		
	13340	Pre-Engineered Structures
	13400	Process Instrumentation
15		
	15050	Common Work Results for Plumbing
	15051	Common Work Results for HVAC
	15057	Pipe Materials 2-inches and Smaller
	15081	HVAC Insulation
	15100	Water Utility Fittings and Appurtenances
	15101	Plumbing Piping
	15119	Electric Motor Actuators
	15180	Heating and Cooling Piping
	15410	Plumbing Fixtures
	15739	Split System Air Conditioners
	15800	HVAC Air Distribution
	15950	Testing, Adjusting, and Balancing for HVAC
16		
	16050	General Electrical Provisions
	16060	Basic Electrical Materials and Methods
	16075	Electrical Equipment Identification
	16123	600-Volt Rated Wire and Cable
	16130	Raceway and Boxes
	16140	Wiring Devices
	16210	Electric Utility Services
	16235	Engine Generator Unit
	16413	Enclosed Transfer Switch
	16441	Switchboard
	16442	600-Volt Rated Panel Boards and Circuit Breakers
	16443	Motor Control Center
	16461	Dry Type Transformer
	16500	Interior and Exterior Lighting
Appendix A		Northside Tanks Piping Reconfiguration Geotechnical Memorandum, prepared by Cornerstone Earth Group, May 15, 2013

END OF DOCUMENT

DOCUMENT 00020

PROJECT TEAM

CITY *CITY OF SANTA CLARA*

Christopher de Groot, Director of Water and Sewer Utilities
1500 Warburton Avenue
Santa Clara, CA 95050
Telephone: 1+(408) 615-2014
Fax: 1+(408) 247-0784
Email: CdeGroot@santaclaraca.gov

Shilpa Mehta, Principal Engineer – Water and Sewer
1500 Warburton Avenue
Santa Clara, CA 95050
Telephone: 1+(408) 615-2011
Fax: 1+(408) 247-0784
Email: SMehta@santaclaraca.gov

Howard Salamanca, Water Utility Engineer
1500 Warburton Avenue
Santa Clara, CA 95050
Telephone: 1+(408) 615-2012
Fax: 1+(408) 247-0784
Email: HSalamanca@santaclaraca.gov

CONSULTANTS

CIVIL ENGINEER *GHD INC*

Nancy Ku, Project Manager
1735 N. First Street, Suite 301
San Jose, CA 95112
Telephone: (408) 451-9615
Fax: (408) 451-9665
Email: Nancy.Ku@ghd.com

END OF DOCUMENT

THIS PAGE

WAS INTENTIONALLY

LEFT BLANK

DOCUMENT 00030

SEALS

CITY OF SANTA CLARA

NORTHSIDE TANKS SITE IMPROVEMENTS PROJECT

WA 30148

TRACING NO. W-3143-4

CIVIL ENGINEER

GHD INC.

Signature: _____

Date: _____

CITY OF SANTA CLARA

NORTHSIDE TANKS SITE IMPROVEMENTS PROJECT

WA 30148

TRACING NO. W-3143-4

STRUCTURAL ENGINEER

GHD INC.

Signature:_____

Date:_____

CITY OF SANTA CLARA

NORTHSIDE TANKS SITE IMPROVEMENTS PROJECT

WA 30148

TRACING NO. W-3143-4

MECHANICAL ENGINEER

GHD INC.

Signature:_____

Date:_____

CITY OF SANTA CLARA

NORTHSIDE TANKS SITE IMPROVEMENTS PROJECT

THIS PAGE

WA 30148

TRACING NO. W-3143-4

WAS INTENTIONALLY

LEFT BLANK

ELECTRICAL ENGINEER

GHD INC.

Signature:_____

Date:_____

END OF DOCUMENT

DOCUMENT 00040

LIST OF DRAWINGS

DRAWINGS

CSC TRACING NO. W-3143-4

Description	Sheet Number
VICINITY MAP, LOCATION MAP, AND DRAWING INDEX	G001
NOTES	G002
CIVIL SYMBOLS, LEGEND, AND ABBREVIATIONS	C001
SITE DEMOLITION PLAN	C100
OVERALL SITE PLAN	C101
WATER PLAN AND PROFILE 1	C102
WATER PLAN AND PROFILE 2	C103
STANDARD WATER DETAILS 1	C501
STANDARD WATER DETAILS 2	C502
WATER DETAILS 1	C503
WATER DETAILS 2	C504
FLOWMETER AND TURBIDIMETER VAULTS	C505
WATER DETAILS 3	C506
WATER DETAILS 4	C507
ARCHITECTURAL ABBREVIATIONS, LEGEND AND NOTES	A001
FLOOR PLAN PROPOSED ADDITION	A101
ROOF PLAN	A102
EXTERIOR ELEVATIONS	A201
DETAILS	A501
SCHEDULES AND DETAILS	A601
STRUCTURAL LEGEND AND NOTES	S001
SPECIAL INSPECTIONS	S002
STRUCTURAL NOTES	S003
BUILDING FOUNDATION PLAN	S100
STRUCTURAL SECTIONS	S300
STRUCTURAL DETAILS 1	S501
MECHANICAL LEGEND, SYMBOLS & ABBREVIATIONS	M001
MECHANICAL HVAC PLAN	M100
MECHANICAL FUEL PIPING/ PLUMBING PLAN	M101
MECHANICAL DETAILS AND SCHEDULES	M501
TITLE 24 FORMS, ENVELOPE AND MECHANICAL 1	M701
TITLE 24 FORMS, ENVELOPE AND MECHANICAL 2	M702
ELECTRICAL LEGEND AND ABBREVIATIONS	E001
SVP CONDUIT RELOCATION	E002
ELECTRICAL SITE PLAN	E101
ELECTRICAL DEMOLITION PLAN - EXISTING BLDG	E102
ELECTRICAL PLAN - EXISTING BLDG	E103
LIGHTING LAYOUT PLAN	E104
ELECTRICAL LAYOUT PLAN	E105
LIGHTING LAYOUT PLAN	E106
ELECTRICAL DETAILS 1	E501

ELECTRICAL DETAILS 2	E502
ELECTRICAL DETAILS 3	E503
I/O TERMINAL CABINET DETAIL	E504
ELECTRICAL SINGLE LINE DIAGRAMS	E601
ELECTRICAL SCHEDULES	E602
ELECTRICAL INPUT/OUTPUT SCHEDULE	E603
ELECTRICAL ENERGY COMPLIANCE 1	E701
ELECTRICAL ENERGY COMPLIANCE 2	E702
ELECTRICAL ENERGY COMPLIANCE 3	E703

END OF DOCUMENT

DOCUMENT 00050

REFERENCES AND DEFINITIONS

PART 1 GENERAL

1.1 SUMMARY

A. Section Includes: Reference standards, abbreviations, symbols, and definitions used in Contract Documents.

B. Full titles are given in this Section for standards cited in other Sections of Specifications.

C. Material and workmanship specified by reference to number, symbol, or title of specific standard such as state standard, commercial standard, federal specifications, technical society, or trade association standard, or other similar standard, shall comply with requirements of standards except when more rigid requirements are specified or required by applicable codes.

D. Standards referred to, except as modified herein, shall have full force and effect as though printed in the Contract Documents. Standards are not furnished to Contractor because manufacturers and trades involved are assumed to be familiar with their requirements.

1.2 REFERENCE TO STANDARDS AND SPECIFICATIONS OF TECHNICAL SOCIETIES; REPORTING AND RESOLVING DISCREPANCIES

A. Reference to standards, specifications, manuals, or codes of any technical society, organization, or association, or to the laws or regulations of any governmental authority, whether such reference be specific or by implication, shall mean the latest standard, specification, manual, code, or laws or regulations in effect at the time of opening of Bids, except as may be otherwise specifically stated in the Contract Documents.

B. If during the performance of the Work, Contractor discovers any conflict, error, ambiguity, or discrepancy within the Contract Documents or between the Contract Documents and any provision of any such law or regulation applicable to the performance of the Work or of any such standard, specification, manual, or code or of any instruction of any supplier, report it in writing at once by submitting a RFI to City, and do not proceed with the Work affected thereby until consent to do so is given by City.

C. Except as otherwise specifically stated in the Contract Documents or as may be provided by Change Order, Construction Change Directive (“CCD”), or Supplemental Instruction, the provisions of the Contract Documents shall take precedence in resolving any conflict, error, ambiguity, or discrepancy between the provisions of the Contract Documents and:

1. The provisions of any such standard, specification, manual, code, or instruction (whether or not specifically incorporated by reference in the Contract Documents); or

2. The provisions of any such laws or regulations applicable to the performance of the Work (unless such an interpretation of the provisions of the Contract Documents would result in violation of such law or regulation).

D. No provision of any such standard, specification, manual, code, or instruction shall be effective to change the duties and responsibilities of City, Contractor, or Engineer, or any of their subcontractors, consultants, agents, or employees, from those set forth in the Contract Documents, nor shall it be effective to assign to City, Engineer, or any of their consultants, agents, representatives or employees any duty or authority to supervise or direct the furnishing or performance of the Work or any duty or authority to undertake responsibility inconsistent with the provisions of the Contract Documents.

E. Comply with the applicable portions of standards and specifications published by the technical societies, institutions, associations, and governmental agencies referred to in Specifications.

1. Comply with referenced standards and specifications; latest revision in effect at the time of opening of Bids, unless otherwise identified by date.
   a. Exception: Comply with issues in effect as listed in governing legal requirements.

F. Referenced Grades, Classes, and Types: Where an alternative or optional grade, class, or type of product or execution is included in a reference but is not identified in Drawings or in Specifications, provide the highest, best, and greatest of the alternatives or options for the intended use and prevailing conditions.

G. Jobsite Copies:

1. Obtain and maintain at the Site copies of reference standards identified on Drawings and in Specifications in order to properly execute the Work.

2. At a minimum, the following shall be readily available at the Site:
   a. Safety Codes: State of California, Division of Industrial Safety regulations.

H. Edition Date of References:

1. When an edition or effective date of a reference is not given, it shall be understood to be the current edition or latest revision published as of the date of opening Bids.

2. All amendments, changes, errata and supplements as of the effective date shall be included.

I. ASTM and ANSI References: Specifications and Standards of the American Society for Testing and Materials (ASTM) and the American National Standards Institute (ANSI) are identified in the Drawings and Specifications by abbreviation and number only and may not be further identified by title, date, revision, or amendment. It is presumed that Contractor is familiar with and has access to these nationally- and industry-recognized specifications and standards.

1.3 ABBREVIATIONS

A. Listed hereinafter are the various organizations or references which may appear in the Contract Documents, along with their respective acronyms and/or abbreviations:

AA	Aluminum Association
AABC	Associated Air Balance Council
AAMA	Architectural Aluminum Manufacturers Association

AAP	Affirmative Action Program
AASHTO	American Association of State Highway and Transportation Officials
ABMA	American Boiler Manufacturers Association
ABPA	American Board Products Association
ACI	American Concrete Institute
AED	Association of Equipment Distributors
AGA	American Gas Association
AISC	American Institute of Steel Construction
AISI	American Iron and Steel Institute
AITC	American Institute of Timber Construction
AMCA	Air Moving and Conditioning Association, Inc.
ANSI	American National Standards Institute (formerly American Standards Association)
APA	American Plywood Association
ARI	Air-Conditioning and Refrigeration Institute
ASHRAE	American Society of Heating, Refrigeration, and Air-Conditioning Engineers
ASME	American Society of Mechanical Engineers
ASTM	American Society for Testing and Materials
AWCI	Association of the Wall and Ceiling Industries
AWPA	American Wood- Preservers Association
AWPB	American Wood Preservers Bureau
AWS	American Welding Society
AWWA	American Water Works Association
BIL	Basic Insulation Level
Cal/OSHA	California Occupational Safety and Health Administration
Caltrans	State of California, Department of Transportation
CBC	California Building Code
CCD	Construction Change Directive
CCR	California Code of Regulations
CEC	California Electric Code
CFR	Code of Federal Regulations
CISPI	Cast Iron Soil Pipe Institute
CLMFI	Chain Link Fence Manufacturers Institute
CMC	California Mechanical Code
CO	Change Order
CPC	California Plumbing Code
CPM	Critical Path Method
CPUC	California Public Utilities Commission
CRA	California Redwood Association
CRSI	Concrete Reinforcing Steel Institute
CS	Commercial Standards, U.S. Department of Commerce
CSA	Canadian Standards Association
CTI	Ceramic Tile Institute
DHI	Door and Hardware Institute
DSA	Division of State Architect (formerly known as the Office of the State Architect)
EPA	Environmental Protection Agency
FGMA	Flat Glass Marketing Association
FM	Factory Mutual
FS	Federal Specifications
GA	Gypsum Association
HPMA	Hardwood Plywood Manufacturers Association

HVAC	Heating, Ventilating and Air Conditioning
I.D.	Identification
IACS	International Annealed Copper Standards
IAPMO	International Association of Plumbing and Mechanical Officials
ICBO	International Conference of Building Officials
ICEA	Insulated Cable Engineers Association
IEEE	Institute of Electrical and Electronic Engineers, Inc.
IES	Illuminating Engineering Society
ISA	Instrumentation Society of America
JATC	Joint Apprenticeship Training Committee
JV	Joint Venture
LBE	Local Business Enterprise
M.I.	Middle Initial
M/WBE	Minority and/or Woman-Owned Business Enterprise
MBE	Minority Business Enterprise
MIA	Masonry Institute of America
MIA	Marble Institute of America
MLSFA	Metal Lath/Steel Framing Association
MS	Military Specifications
MSDS	Material Safety Data Sheet
MSS	Manufacturers Standardization Society of the Valve & Fitting Industry
NAAMM	National Association of Architectural Metal Manufacturers
NACE	National Association of Corrosion Engineers
NBS	National Bureau of Standards
NEC	National Electric Code
NEMA	National Electric Manufacturers Association
NESC	National Electrical Safety Code
NFPA	National Fire Protection Association
NFPA	National Forest Products Association
NIOSH	National Institute for Occupational Safety and Health
NIST	National Institute of Science and Technology (formerly the National Bureau of Standards)
NOFMA	National Oak Flooring Manufacturers Association
NSF	National Sanitation Foundation
NTMA	National Terrazzo & Mosaic Association
NWWDA	National Wood Windows and Doors Association
OSHA	Occupational Safety and Health Administration
OSHPD	Office of Statewide Health Planning and Department
PCA	Portland Cement Association
PCI	Prestressed Concrete Institute
PDI	Plumbing and Drainage Institute
PG&E	Pacific Gas and Electric Company
PM	Preventive Maintenance
PR	Proposal Request
PS	Product Standard, U. S. Department of Commerce
RFI	Request for Information
RFP	Request for Proposals
RFS	Request for Substitution
RIS	Redwood Inspection Service
RWQCB	Regional Water Quality Control Board
SCVWD	Santa Clara Valley Water District
SDI	Steel Deck Institute
SFM	State of California, Office of State Fire Marshal

SIGMA	Sealed Insulating Glass Manufacturers Association
SJI	Steel Joint Institute
SMACNA	Sheet Metal and Air Conditioning Contractors National Association
SPIB	Southern Pine Inspection Bureau
SSPC	Steel Structures Painting Council
SVP	Silicon Valley Power (City's Electric Utility Department)
SWI	Steel Window Institute
TCA	Tile Council of America
TIE	Time Impact Evaluation
UBC	Uniform Building Code
UFC	Uniform Fire Code
UL	Underwriters' Laboratories, Inc.
UMC	Uniform Mechanical Code
UPC	Uniform Plumbing Code
USA	Underground Service Alert
USC	United States Code
WCLIB	West Coast Lumber Inspection Bureau
WHI	Warnock Hersey International a testing lab
WIC	Woodwork Institute of California
WWPA	Western Wood Products Association

B. Abbreviations in Specifications:

AWG	American Wire Gauge
accord	Accordance
Co.	Company
Corp.	Corporation
cm.	centimeter (centimeters)
cu.	Cubic
Div.	Division
dia.	diameter
ft.	foot (feet)
g./gr.	gram (grams)
gal.	gallon (gallons)
gpd	gallons per day
gpm	gallons per minute
hr.	hour
kg.	kilogram (kilograms)
in.	inch (inches)
Inc.	Incorporated
km.	kilometer (kilometers)
Kw	Kilowatt
l.	liter (liters)
lbs.	pounds
m	meter (meters)
Mfg.	manufacturing
Mg.	milligram (milligrams)
ml./mls.	milliliter (milliliters)
mm.	millimeter (millimeters)
No.	number
o.c.	on centers
O.D.	outside diameter
psi	pounds per square inch
psf	pounds per square foot

sq.	square
T & G	tongue and groove
U.S.	United States
yd.	yard (yards)

C. Abbreviations on Drawings:

Additional abbreviations, used only on Drawings, are indicated thereon.

1.4 SYMBOLS

A. Symbols in Specifications:

:	"shall be" or "shall" - where used within sentences or paragraphs
#1	Number
1#	Pound
&	And
%	Percent
C	Centigrade
F	Fahrenheit
°	Degree
/	per, except where used to combine words; example: power/fuel, and in that case it means and
"	inch (inches)
'	foot (feet)
@	At

B. Symbols on Drawings:

Symbols, used only on Drawings, are indicated thereon.

1.5 DEFINITIONS

A. Wherever any of the words or phrases defined below, or a pronoun used in place thereof, is used in any part of the Contract Documents, it shall have the meaning here set forth. In the Contract Documents, the neuter gender includes the feminine and masculine, and the singular number includes the plural. While City has made an effort to identify all defined terms with initial caps, the following definitions shall apply regardless of case unless the context otherwise requires:

///

1. Addenda: Written or graphic instruments issued prior to the opening of Bids, which clarify, correct, or change the bidding requirements or the Contract Documents. Addenda shall not include the minutes of the Pre-Bid Conference and/or Site Visit.

2. Agreement (Document 00520): Agreement is the basic contract document that binds the parties to construction Work. Agreement defines relationships and obligations between City and Contractor and by reference incorporates Conditions of Contract, Drawings, and Specifications and contains Addenda and all Modifications subsequent to execution of Contract Documents.

3. Alternate: Work added to or deducted from the Base Bid, if accepted by City.

4. Application for Payment: Written application for monthly or periodic progress or final payment made by Contractor complying with the Contract Documents.

5. Approved Equal: Approved in writing by City as being of equivalent quality, utility and appearance.

6. Asbestos: Any material that contains more than one percent asbestosis and is friable or is releasing asbestos fibers into the air above current action levels established by OSHA or Cal/OSHA.

7. Bid: The offer or proposal of the Bidder submitted on the prescribed form(s) setting forth the prices for the Work to be performed.

8. Bidder: One who submits a Bid.

9. Bidding Documents: All documents comprising the Project Manual (including all documents and specification sections listed on Document 00010 [Table of Contents]), including documents supplied for bidding purposes only and Contract Documents.

10. By City: Work that will be performed by City or its agents at the City's expense.

11. By Others: Work that is outside scope of Work to be performed by Contractor under this Contract, which will be performed by City, other contractors, or other means.

12. Calendar Day: See Day.

13. Cement: When not otherwise qualified, shall mean Portland Cement.

14. Change Order: A written instrument prepared by City and signed by City and Contractor, stating their agreement upon all of the following:
    a. a change in the Work;
    b. the amount of the adjustment in the Contract Sum, if any; and
    c. the amount of the adjustment in the Contract Time, if any.

15. City: The City of Santa Clara, a Municipal Corporation of the State of California.

16. City Council: The City Council of the City of Santa Clara, California, or its duly authorized agent.

17. City-Furnished, Contractor-Installed: Items furnished by City at its cost for installation by Contractor at its cost under Contract Documents.

18. City's Representative(s): See Document 00520, Agreement.

19. Code Inspector: A local or state agency responsible for the enforcement of applicable codes and regulations.

20. Concealed: Work not exposed to view in the finished Work, including within or behind various construction elements.

21. Concrete: When not otherwise qualified, shall mean Portland Cement Concrete.

22. Construction Change Directive: A written order prepared and signed by City, directing a change in the Work and stating a proposed basis for adjustment, if any, in the Contract Sum or Contract Time, or both.

23. Consultant: See Document 00520, Agreement (if this term is used).

24. Consulting Engineer: See Document 00520, Agreement (if this term is used).

25. Construction Manager: See Document 00520, Agreement, (if this term is used).

26. Contract: See Contract Documents.

27. Contract Conditions: Consists of two parts: General Conditions and Supplemental Conditions.
    a. General Conditions are general clauses that are common to the City Contracts, including Document 00700.
    b. Supplemental conditions modify or supplement General Conditions to meet specific requirements for this Contract, including Document 00800 and Document 00810 (if included).

28. Contract Documents and Contract: Contract Documents and Contract shall consist of the Plans, Division 0, GENERAL PROVISIONS, Division 1, GENERAL REQUIREMENTS, Division 2, TECHNICAL PROVISIONS, Divisions 3 and above, SPECIAL PROVISIONS, plus all changes, addenda, and modifications thereto.

29. Contract Modification: Either:
    a. a written amendment to Contract signed by Contractor and City; or
    b. a Change Order; or
    c. a Construction Change Directive; or
    d. a written directive for a minor change in the Work issued by City.

30. Contract Sum: The sum stated in the Agreement and, including authorized adjustments, the total amount payable by City to Contractor for performance of the Work and the Contract Documents. The Contract Sum is also sometimes referred to as the Contract Price or the Contract Amount.

31. Contract Time: The number or numbers of Days or the dates stated in the Agreement:
    a. to achieve Substantial Completion of the Work or designated milestones; and/or
    b. to achieve Final Completion of the Work so that it is ready for final payment and acceptance.

32. Contractor: The person or entity identified as such in the Agreement and referred to throughout the Contract Documents as if singular in number and neutral in gender. The term “Contractor” means the Contractor or its authorized representative.

33. Contractor’s Employees: Persons engaged in execution of Work under Contract as direct employees of Contractor, as Subcontractors, or as employees of Subcontractors.

34. Day: One calendar day of 24 hours measured from midnight to the next midnight, unless the word “day” is specifically modified to the contrary.

35. Defective: An adjective which, when modifying the word "Work," refers to Work that is unsatisfactory or unsuited for the use intended, faulty, or deficient, that does not conform to the Contract Documents, or does not meet the requirements of any inspection, reference standard, test or approval referred to in the Contract Documents (including but not limited to approval of samples and "or equal" items), or has been damaged prior to final payment (unless responsibility for the protection thereof has been assumed by City). City is the judge of whether Work is defective.

36. Drawings: The graphic and pictorial portions of Contract Documents, wherever located and whenever issued, showing the design, location and dimensions of the Work, generally including plans, elevations, sections, details, schedules and diagrams.

37. Engineer: The City Engineer and/or his representative or other duly authorized representative of City appointed by the City for the special purpose of directing and having charge of the construction of the Work for the City. Said representative may act either directly or through properly authorized agents. Said representatives and agents may act only within the scope of the particular duties entrusted to them.

38. Equal: Equal in opinion of City. Burden of proof of equality is responsibility of Contractor.

39. Exposed: Work exposed to view in the finished Work, including behind louvers, grilles, registers and various other construction elements.

40. Final Acceptance: See Final Completion.

41. Final Completion: City's acceptance of the Work as satisfactorily completed in accordance with Contract Documents. Requirements for Final Completion /Final Acceptance include, but are not limited to:
    a. All systems having been tested and accepted as having met requirements of Contract Documents.
    b. All required instructions and training sessions having been given by Contractor.
    c. All Project Record Documents having been submitted by Contractor, reviewed by City and Engineer, and accepted by City.
    d. All punch list work, as directed by City, having been completed by Contractor.
    e. Generally all Work, except Contractor maintenance after Final Acceptance, having been completed to satisfaction of City.

42. Force Account: Work directed to be performed without prior agreement as to lump sum or unit price cost thereof, and which is to be billed at cost for labor, materials, equipment, taxes, and other costs, plus a specified percentage for overhead and profit.

43. Furnish: Supply only, do not install.

44. Indicated: Shown or noted on the Drawings.

45. Install: Install or apply only, do not furnish.

46. Latent: Not apparent by reasonable inspection, including but not limited to, the inspections and research required as a condition to bidding under the General Conditions.

47. Law: Unless otherwise limited, all applicable laws including without limitation all federal, state, and local laws, statutes, standards, rules, regulations, ordinances, and judicial and administrative decisions

48. Material: This word shall be construed to embrace machinery, manufactured articles, materials of construction (fabricated or otherwise), and any other classes of material to be furnished in connection with Contract, except where a more limited meaning is indicated by context.

49. Milestone: A principal event specified in Contract Documents relating to an intermediate completion date or time prior to Substantial Completion of all Work.

50. Modification: Same as Contract Modification.

51. Not in Contract: Work that is outside the scope of Work to be performed by Contractor under Contract Documents.

52. Notice of Completion: Shall have the meaning provided in California Civil Code Section 3093, and any successor statute.

53. Off Site: Outside geographical location of the Project.

54. Owner: The City.

55. Partial Utilization: Use by City of a substantially completed part of the Work for the purpose for which it is intended (or a related purpose) prior to Substantial Completion of all of the Work.

56. PCBs: Polyclorinated byphenyls.

57. Phase: A specified portion of the Work (if any) specifically identified as a Phase in Document 00520, Agreement, or Document 01100, Summary.

58. Plans: See Drawings.

59. Product Data: That information (including brochures, catalogue cuts, MSDS, etc.) supplied by the vendor describing the technical and commercial characteristics of the supplier equipment or materials, and accompanying commercial terms such as warranties, instructions and manuals.

60. Progress Report: A periodic report submitted by Contractor to City with progress payment invoices accompanying actual work accomplished to the Progress Schedule. See Section 01320, Progress Schedules and Reports, and Document 00700, General Conditions.

61. Project: Total construction of which Work performed under Contract Documents may be whole or part.

62. Project Float: As defined in Section 01320, paragraph 1.2.B.3.

63. Project Inspector: A person engaged by City to provide general observation of the Work, scheduling requested inspections by Contractor and reporting to City.

64. Project Manager: The person or persons assigned by City to be the City's agent(s) at the Site. See Document 00520, Agreement.

65. Project Manual: Project Manual consists of Bidding Requirements, Agreement, Bonds, Certificates, Contract Conditions, and Specifications.

66. Project Record Documents: All Project deliverables required under Sections 01700 et seq., including without limitation, as-built drawings, operations and maintenance manuals Installation, Operation, and Maintenance Manuals, and Machine Inventory Sheets.

67. Provide: Furnish and install.

68. Request for Information ("RFI"): A document prepared by Contractor requesting information regarding the Project or Contract Documents as provided in Document 01250, Modification Procedures. The RFI system is also a means for City to submit Contract Document clarifications or supplements to Contractor.

69. Request for Proposals ("RFP"): A document issued by City to Contractor whereby City may initiate changes in the Work or Contract Time as provided in Contract Documents. See Document 01250, Modification Procedures.

70. Request for Substitution ("RFS"): A document prepared by Contractor requesting substitution of materials as permitted and to the extent permitted in Contract Documents. See Section 01600, Product Requirements.

71. RFI-Reply: A document consisting of supplementary details, instructions, or information issued by City that clarifies or supplements Contract Documents, and with which Contractor shall comply. RFI-Replies do not constitute changes in Contract Sum or Contract Time except as otherwise agreed in writing by City.

72. Samples: Physical examples of materials, equipment, or workmanship that are representative of some portion of the Work and which establish the standards by which such portion of the Work will be judged.

73. Shop Drawings: All drawings, diagrams, illustrations, schedules and other data or information which are specifically prepared or assembled by or for Contractor and submitted by Contractor to illustrate some portion of the Work.

74. Shown: As indicated on Drawings.

75. Site: The particular geographical location of Work performed pursuant to Contract Documents.

76. Special Provisions: Division 3 of the Specifications.

77. Specifications: The written portion of the Contract Documents as specified in Document 00520, Agreement.

78. Specified: As written in Specifications.

79. Standard Details: The latest revision of the City of Santa Clara Standard Details, effective at the date of the award of the Contract.

80. Standard Plans: The latest revision of the State of California Department of Transportation Standard Plans, effective at the date of the award of the Contract.

81. Standard Specifications: The latest revision of the State of California Department of Transportation Standard Specifications, effective at the date of the award of the Contract. However, when a reference is made to the Standard Specifications and said reference is no longer specified in the latest revision of the Standard Specifications, said reference shall be to the 2006 Edition of the Standard Specifications. Whenever the following terms are used in the Standard Specifications, they shall be understood to mean and refer to the following:
    a. Department of Transportation or Division of Highways: The City's Public Works Department or, when applicable, the designated Department.
    b. The Director of Public Works: The City's Director of Public Works.
    c. Engineer: Engineer as defined above.
    d. The State: The City.
    e. Laboratory: The City's Materials Testing Laboratory, or the designated laboratory authorized by the City.
    f. Other terms appearing in the Standard Specifications, the General Provisions, General Requirements, Technical Provisions, or the Special Provisions, shall have the intent and meaning specified in Section 1, "Definitions and Terms" of the Standard Specifications. In case of conflict between the Standard Specifications and these definitions, these definitions shall take precedence over and be used in lieu of such conflicting portions of the Standard Specifications.
    g. The pay provisions in the Standard Specifications shall not be applicable to City Contractors.

82. Subcontractor: A person or entity that has a direct contract with Contractor to perform a portion of the Work at the Site. The term "Subcontractor" is referred to throughout the Contract Documents as if singular in number and neutral in gender and means a Subcontractor or an authorized representative of the Subcontractor. The term "Subcontractor" does not include a separate contractor or subcontractors of a separate contractor.

83. Substantial Completion: The Work (or a specified part thereof) has progressed to the point where, in the opinion of City as evidenced by a Certificate of Substantial Completion, the Work is sufficiently complete, in accordance with Contract Documents, so that the Work (or specified part) can be utilized for the purposes for which it is intended; or if no such certificate is issued, when the Work (or specified part) is complete and ready for final payment as evidenced by written recommendation of City for final payment. The terms "Substantially Complete" and "Substantially Completed" as applied to all or part of the Work refer to Substantial Completion thereof.

84. Supplemental Instruction: A written directive from City to Contractor ordering alterations or modifications that do not result in change in Contract Sum or Contract Time, and do not substantially change Drawings or Specifications. See Document 01250, Modification Procedures.

85. Technical Provisions: Division 2 of the Specifications.

86. Testing and Special Inspection Agency: An independent entity engaged by City to inspect and/or test the workmanship, materials, or manner of construction of buildings or portions of buildings, to determine if such construction complies with the Contract Documents and applicable codes.

87. Underground Facilities: All pipelines, conduits, ducts, cables, wires, manholes, vaults, tanks, tunnels or other such facilities or attachments, and any encasements containing such facilities that have been installed underground to furnish any of the following services or materials: Electricity, gases, chemicals, steam, liquid petroleum products, telephone or other communications, cable television, sewage and drainage removal, traffic or other control systems, or water.

88. Unit Price Work: Shall be the portions of the Work for which a unit price is provided in Document 00520, Agreement, or Section 01100, Summary.

89. Work: The entire completed construction, or the various separately identifiable parts thereof, required to be furnished under the Contract Documents within the Contract Time. Work includes and is the result of performing or furnishing labor and furnishing and incorporating materials and equipment into the construction, and performing or furnishing services and furnishing documents, all as required by the Contract Documents including everything shown in the Drawings and set forth in the Specifications. Wherever the word "work" is used, rather than the word "Work," it shall be understood to have its ordinary and customary meaning.

90. Working Day: Any Day other than Saturday, Sunday, City furlough days, and the following days that have been designated as holidays by City. If a holiday falls on a Saturday, the preceding Friday will be the holiday. If a holiday falls on a Sunday, the following Monday will be the holiday.
    a. New Year's Day, January 1;
    b. Martin Luther King Jr.'s Birthday, third Monday in January;
    c. Presidents' Day, third Monday in February;
    d. Spring Holiday, the Friday before Easter Sunday
    e. Memorial Day, last Monday in May;
    f. Independence Day, July 4;
    g. Labor Day, first Monday in September;
    h. Admission Day, September 9th;

i. Columbus Day, second Monday in October
j. Veterans' Day, November 11;
k. Thanksgiving Day, as designated by the President;
l. The Day following Thanksgiving Day;
m. Christmas Day, December 25; and
n. Each day appointed by the Governor of California and formally recognized by the City Council as a day of mourning, thanksgiving, or special observance.

B. Wherever words "as directed," "as required," "as permitted," or words of like effect are used, it shall be understood that direction, requirements, or permission of City is intended. Words "sufficient," "necessary," "proper," and the like shall mean sufficient, necessary, or proper in judgment of City. Words "approved," "acceptable," "satisfactory," "favorably reviewed," or words of like import, shall mean approved by, or acceptable to, or satisfactory to, or favorably reviewed by City.

C. Wherever the word "may" or "ought" is used, the action to which it refers is discretionary. Wherever the word "shall" or "will" is used, the action to which it refers is mandatory.

END OF SECTION

DOCUMENT 00100

NOTICE INVITING BIDS

1. NOTICE. The City of Santa Clara, California, a chartered California municipal corporation, ("City") hereby gives notice that it will accept bids for construction of the following public work:

NORTHSIDE TANKS SITE IMPROVEMENTS PROJECT
INVITATION NO. WA 30148

2. BID SUBMISSION. City will receive sealed Bids in the Office of the City Clerk, 1500 Warburton Avenue, Santa Clara, California 95050, until **3:00 p.m.**, as determined by the atomic clock above the help window of the City Clerk's Office and the City Clerk, on **July 30, 2014**. Bids will be opened shortly thereafter on that same day. The opening will be in accordance with procedures set forth in Document 00250, Bid Contents, Evaluation, Selection, and Award.

3. CONTACT INFORMATION. Bidders may obtain further information from:

Project Engineer:	Howard Salamanca
Email:	HSalamanca@santaclaraca.gov
Telephone:	1+(408) 615-2012
Fax:	1+(408) 247-0784
Mailing address:	City of Santa Clara 1500 Warburton Avenue Santa Clara, CA 95050

4. STATEMENT OF QUALIFICATIONS. Each Bidder shall be required to submit a Statement of Qualifications in accordance with Document 00200, Instructions to Bidders, and Document 00450, Statement of Qualifications for Construction Work.

5. DESCRIPTION OF WORK. The Work shall consist of reconfiguring of the piping network at the site to improve water quality, provide better operational flexibility and increase reliability, and installating of a standby emergency generator to ensure operation of the pump station in the event of a power interruption.

The piping reconfiguration connecting the various water system components will be modified to comply with current regulations, be more efficient and improve water quality and reliability, and increase the usable water storage in the tanks. The new piping modifications would allow for each of the two tanks to be filled and more completely drained independently or simultaneously, provide additional pipelines for redundancy, and increase flexibility for supplying water to the different system pressure zones. The modifications include demolition of existing piping, installation of new piping and valves, instrumentation, and vaults.

At the water distribution pump station, the project will improve emergency fire flow capability by removing the single propane-fueled pump and installing a larger diesel-fueled standby generator. This will enable the remaining four electric water pumps to operate during power interruptions. Work includes electrical modifications to the existing pump house. To provide for improved electrical safety at the site, Work includes a separate 17 feet by 23 feet pre-fabricated metal building to be constructed adjacent to the existing pump house to facilitate installation of a new 350 KW generator. In addition, the City will be adding more instrumentation to provide additional remote monitoring and control capability, as well as improved operation and data reporting.

6. CONTRACT TIME. The Work shall reach Substantial Completion within one hundred twenty (120) Calendar Days from the date when the Contract Time commences to run. The Work shall reach Final Completion within one hundred fifty (150) Calendar Days from the date when the Contract Time commences to run. See Document 00050, References and Definitions, for definitions of Substantial Completion and Final Completion.

7. REQUIRED CONTRACTOR'S LICENSE(S). A California "A" contractor's license is required to bid this contract. Joint ventures must secure a joint venture license prior to award of this Contract.

8. PREVAILING WAGE LAWS. The successful Bidder must comply with all prevailing wage laws applicable to the Project, and related requirements contained in the Contract Documents.

9. INSTRUCTIONS. Bidders shall refer to Document 00200, Instructions to Bidders, for required documents and items to be submitted in sealed envelopes for deposit into the Bid box, located at the City Clerk's office, and applicable times for submission.

10. SUBSTITUTIONS OF SECURITIES. City will permit the successful Bidder to substitute securities for retention monies withheld to ensure performance of Contract, as set forth in Document 00680, Escrow Agreement for Security Deposits in Lieu of Retention, in accordance with California Public Contract Code, Section 22300. By this reference, Document 00680, Escrow Agreement for Security Deposits in Lieu of Retention, is incorporated in full in this Document 00100, Notice Inviting Bids.

11. PRE-BID CONFERENCE AND SITE VISIT. City will conduct a **Mandatory** Pre-Bid Conference and Site Visit at **10:00 a.m. on July 17, 2014 at 2339 Gianera Street, Santa Clara, CA**. Bidders are required to attend the Pre-Bid Conference and Site Visit, which will last approximately 2 hours.

12. BIDDING DOCUMENTS. Bidders may examine Bidding Documents at the office of:

Prints Charles Reprographics, 1643 S. Main Street, Milpitas, CA 95035 and at www.printscharlesrepro.com (PLAN VAULT);
City of Santa Clara, Engineering Department, 1500 Warburton Avenue, Santa Clara, CA 95050;
Asian Inc., 1167 Mission Street, 4th Floor, San Francisco, CA 94103;
Builders Exchange of Alameda County, 3055 Alvarado Street, San Leandro, CA 94577;
Builders Exchange of Santa Clara County, 400 Reed Street, Santa Clara, CA 95050;
Central Coast Builders Association, 20 Quail Run Circle, Ste A, Salinas, CA 93907;
Contra Costa Builders Exchange, 2440 Stanwell Drive, Concord, CA 94520;
iSqFt, 4500 Lake Forest Drive, Cincinnati, OH 45242;
McGraw-Hill Construction Dodge, 4300 Beltway Place, Suite 180, Arlington, TX 76018 and at www.construction.com/projectcenter/;
Peninsula Builders Exchange, 735 Industrial Way, San Carlos, CA 94070;
Placer County Contractors Association, 10656 Industrial Ave., Ste 160, Roseville, CA 95678;
Reed Construction Data, 30 Technology Parkway South, Suite 100, Norcross, GA 30092;
Sacramento Builders Exchange, 1331 "T" Street, Sacramento, CA 95814;
Sacramento Builders Exchange, 151 N. Sunrise Avenue #511, Roseville, CA 95661;
San Francisco Builders Exchange, 850 South Van Ness Avenue, San Francisco, CA 94110;
Stockton Builders Exchange, 7500 Northwest Lane, Stockton, CA 95210.

13. PROCUREMENT OF BIDDING DOCUMENTS.

Bidding Documents may be viewed at no cost or purchased for a **NON-REFUNDABLE FEE** of one hundred forty-four dollars **($144.00)** via the internet at www.printscharlesrepro.com (PLAN VAULT). Bidding Documents may also be purchased by calling Prints Charles Reprographics at 1+(408) 240-3330. Please make checks payable to Prints Charles Reprographics **not** the City of Santa Clara. Bidders requesting that Bidding Documents be **mailed/shipped** to them will be charged the full costs of shipping. Bidding Documents and Plan Holder lists may also be viewed at the web site noted above.

Addenda, if any, will be provided free of charge to all registered plan holders, and to all Builders Exchanges listed above.

The successful bidder will be provided with up to five (5) complete sets of Plans and Specifications, for construction use, after the award of Contract. The successful bidder will be responsible for all costs for additional sets for its firm and its subcontractors, beyond those provided by the City.

14. BID PREPARATION COST. Bidders are solely responsible for the cost of preparing their Bids.

15. RESERVATION OF RIGHTS. City specifically reserves the right, in its sole discretion, to reject any or all Bids, or re-bid, or to waive inconsequential deviations from Bid requirements not involving time, price, or quality of the Work.

City of Santa Clara, Santa Clara, California.

By: _____ Date _____, 2014
ROD DIRIDON, JR.
City Clerk

END OF DOCUMENT

THIS PAGE

WAS INTENTIONALLY

LEFT BLANK

DOCUMENT 00200

INSTRUCTIONS TO BIDDERS

Bids are requested for a general construction contract, or work described in general, as follows:

NORTHSIDE TANKS SITE IMPROVEMENTS PROJECT
INVITATION NO. WA 30148

1. **RECEIPT OF BIDS.** The City will only receive sealed Bids from Bidders at the Office of the City Clerk, 1500 Warburton Avenue, Santa Clara, CA 95050, on **July 30, 2014**. City will receive Bids in two parts, "Envelope A" and "Envelope B", each containing the items described in Document 00250, Bid Contents, Evaluation, Selection, and Award. Envelope A and Envelope B shall be due by 3:00 p.m., as determined by the atomic clock above the help window of the City Clerk's Office and the City Clerk. City will reject all Bids received after the specified time and will return such Bids to Bidders unopened. Bidders must submit Bids in accordance with Document 00250, Bid Contents, Evaluation, Selection, and Award. Only Envelope A will be publicly opened, and the Bid amount read aloud immediately following the closing date and time.

2. **CONTACT INFORMATION.**

Project Engineer:	Howard Salamanca
Email:	HSalamanca@santaclaraca.gov
Telephone:	1+(408) 615-2012
Fax:	1+(408) 247-0784
Mailing address:	City of Santa Clara 1500 Warburton Avenue Santa Clara, CA 95050

3. **BID SUBMISSION.** Each Bidder shall submit its Bid in two separate opaque sealed 10" x 13" envelopes containing forms listed in Document 00250, Bid Contents, Evaluation, Selection, and Award, and in the manner described in Document 00250. Each Bidder should mark its Bid envelopes as BID FOR THE CITY, CONTRACT NUMBER WA 30148, NORTHSIDE TANKS SITE IMPROVEMENTS PROJECT, Envelope "A" or "Envelope "B," as appropriate. Bids shall be deemed to include the written responses of the Bidder to any questions or requests for information of City made as part of Bid evaluation process after submission of Bid. Bidder's failure to submit all required documents strictly as required entitles City to reject the Bid as non-responsive.

4. **REQUIRED BID.** All Bidders must submit Bids on Document 00400, Bid. City may reject as non-responsive any Bid not submitted on the required forms. Bids must be full and complete. Bidders must complete all Bid items and supply all information required by Bidding Documents. City reserves the right in its sole discretion to reject any Bid as non-responsive as a result of any error or omission in the Bid. Bidders may not modify the Bid or qualify their Bids. Bidders must submit clearly and distinctly written Bids. Bidders must clearly make any changes in their Bids by crossing out original entries, entering new entries, and initialing new entries. City reserves the right to reject any Bid not clearly written.

5. **REQUIRED BID SECURITY.** Bidders must submit with their Bids either cash, a cashier's check, or certified check from a responsible bank in the United States, or corporate surety bond furnished by a surety authorized to do business in the State of California, of not less than ten percent of amount of Bid, payable to City. All Bidders choosing to submit a surety bond must submit it on Document 00411, Bidder's Bond. City will reject as non-responsive any Bid submitted without the necessary Bid security.

   The City may retain Bid securities and Bid bonds of other than the Apparent Low Bidder for a period of ninety (90) days after award or full execution of the Contract, whichever first occurs. The City may award the Contract to the next Apparent Low Bidder if the Apparent Low Bidder is determined non-responsive or non-responsible, or fails to execute the Contract and provide the required bonds, guarantees, insurance policy verifications and endorsements and other documents within the required time periods. Upon full execution of the Contract, the City will return to the respective unsuccessful Bidders all Bid securities and Bid bonds.

6. **REQUIRED SUBCONTRACTORS LIST.** All Bidders must submit with their Bids the required information on all Subcontractors in Document 00430, Subcontractors List, for those Subcontractors who will perform any portion of Work, including labor, rendering of service, or specially fabricating and installing a portion of the Work or improvement according to detailed drawings contained in the plans and specifications, in excess of one half of one percent (0.5%) of total Bid. Violation of this requirement may result in Bid being deemed non-responsive and not being considered.

7. **REQUIRED STATEMENT OF QUALIFICATIONS.** In order for a Bidder to be eligible to Bid on this Contract, it must submit a Statement of Qualifications responsive to the requirements identified in Document 00450, Statement of Qualification for Construction Work ("SOQ"), including without limitation qualification information for Subcontractors and schedulers, if any.

   Each Bidder shall submit its SOQ as part of Envelope B as provided in Paragraph 1 above and paragraph 6 of Document 00250, Bid Contents, Evaluation, Selection, and Award, containing all information required by Document 00450, Statement of Qualifications for Construction Work, including without limitation qualification information for subcontractors and schedulers.

   Except as otherwise provided in Document 00250, Bid Contents, Evaluation, Selection, and Award, City will make final determinations regarding Bidder responsibility based solely upon the SOQ submitted as part of Envelope "B" on Bid day. Information in the SOQ shall be current.

8. **PRE-BID CONFERENCE AND SITE VISIT.** City will conduct a Mandatory Pre-Bid Conference and Site Visit at **10:00 a.m on July 17, 2014, at 2339 Gianera Street, Santa Clara, CA.** Bidders are required to attend the Pre-Bid Conference and Site Visit, which will last approximately 2 hours.

   Any Bidder wishing to investigate subsurface conditions at the Site must schedule such a visit with the City in accordance with this Document 00200, Instructions to Bidders, and Document 00700, General Conditions.

   City reserves the right to schedule and organize the Site Visit to minimize disruption to existing facilities and congestion. Any Bidder wishing to investigate subsurface conditions or otherwise conduct invasive investigations, explorations, tests, or studies at this Site, shall schedule such examinations with the City by giving the City at least seven (7) days written notice.

///

///

Additionally, any such Bidder must deliver an executed Document 00210, Indemnity and Release Agreement, and provide an insurance certificate as described therein by noon of the Day prior to the its examination. Bidders who intend only to observe Site conditions and not conduct such examinations are not required to provide an executed Document 00210, Indemnity and Release Agreement, or an insurance certificate.

Bidders are encouraged to submit written questions in connection with the Site Visit. City will transmit to all parties recorded as having received Bidding Documents such Addenda as City in its discretion considers necessary in response to written questions. Bidders shall not rely on oral statements. Oral statements will not be binding or legally effective. Other Pre-Bid Site Visits may be scheduled at City's sole discretion, depending on staff availability.

9. **OTHER REQUIREMENTS PRIOR TO BIDDING.** Submission of Bid signifies Bidder's careful examination of Bidding Documents and complete understanding of the nature, extent, and location of Work to be performed. As a condition to Bidding, Bidder must complete tasks listed in Document 00520, Agreement. Submission of Bid shall constitute Bidder's express representation to the City that Bidder has fully completed these tasks.

10. **EXISTING DRAWINGS AND GEOTECHNICAL DATA.** Bidders may examine any available existing conditions information (e.g., record documents, specifications, studies, drawings of previous work) by giving City reasonable advance notice, as well as applicable environmental assessment information regarding the Project. Document 00320, Geotechnical Data and Existing Conditions, applies to all supplied existing conditions information and geotechnical reports and all other information supplied regarding existing conditions either above ground or below ground. City will make copies available for a fee. A Bidder must give two (2) days advanced notice if copies are desired.

11. **ADDENDA.** Bidders must direct all questions about the meaning or intent of Bidding Documents to City (Attention: Project Engineer) in writing. Interpretations or clarifications considered necessary by City in response to such questions will be issued by Addenda mailed, faxed, or delivered to all parties recorded by City as having received Bidding Documents. Addenda will be written and will be issued to each Bidder to the address or fax number supplied to City by Bidder. City may not answer questions received less than ten (10) Days prior to the date for opening Bids. Only questions answered by formal written Addenda will be binding. Oral and other interpretations or clarifications will be without legal effect.

    A. Addenda may also be issued to modify the Bidding Documents as deemed advisable by City.

    B. No Addenda will be issued within forty-eight (48) hours of the opening of Bids, unless the addenda includes postponing the scheduled Bid opening date.

    C. Addenda shall be acknowledged by number with signature in Document 00400, Bid, and shall be part of the Contract Documents. A complete listing of Addenda may be secured from City.

///

///

///

///

12. **SUBSTITUTIONS.** Bidders must base their Bids on products and systems specified in Contract Documents or listed by name in Addenda.

A. Except as provided in paragraph 12.C below, City will consider substitution requests only from Bidders for "or equal" items. Bidders wanting to use "or equal" item(s) may submit Document 00660, Substitution Request, no later than fourteen (14) Days prior to the due date for City receiving Bids. After said date, the City will not accept "or equal" substitution requests. To assess "or equal" acceptability of product or system, submittals of substitutions shall contain the information required in Document 00660, Substitution Request, and set forth in Section 01600, Product Requirements. Insufficient information will be grounds for rejection of the "or equal" substitution request. City shall, within a reasonable period of time after having received a request for substitution, issue in writing its decision as to whether the proposed substitute item is an "or equal" item. City's decision shall be conclusive on all Bidders.

B. Approved "or equal" substitutions shall be listed in Addenda and become part of the Contract Documents.

C. Substitutions may be requested after Award of Contract only in accordance with requirements specified in Section 01600, Product Requirements.

D. As further limitation on Bidder's privilege to substitute items, City has found that certain items are designed as City standards and certain items are designed to match existing items in use on a particular public improvement, either completed or in the course of completion. As to such items, City will not permit substitution. City will not permit substitutions for the following items:

NOT APPLICABLE

13. WAGE RATES – Prevailing Wages Requirements. The Contractor shall pay prevailing wages to any worker(s) employed by the Contractor or any of its subcontractors under this Contract. The term "worker" is defined under California Labor Code Sections 1723 and 1772. A prevailing wage is the basic hourly rate the majority of workers in a particular craft or classification earn. The prevailing wage also is based on the locality and nearest labor market. The California Department of Industrial Relations annually determines prevailing wage for various crafts, job classifications and job types. The general prevailing rates of per diem wages for each craft, classification, or type of worker needed to perform the Work required under this Contract, as determined by the State of California Department of Industrial Relations (the "DIR"), are available from the Division of Labor Standards, 455 Golden Gate Avenue, San Francisco, CA 94102 (P.O. Box 420603, San Francisco, CA 94142-0603) or on the DIR website at www.dir.ca.gov/dlsr. Also, Contractor shall post the applicable prevailing wage rates at the Site and ensure they are on file in the City Clerk's Office.

14. **EQUAL EMPLOYMENT OPPORTUNITY.** Contractor shall comply with all applicable federal, state, and local laws, rules, and regulations in regard to nondiscrimination in employment because of race, color, ancestry, national origin, religion, sex, marital status, age, medical conditions, disability, or any other reason.

15. **BID OPENING.** City will open all Bidders' Envelopes "A," on the date and time specified in paragraph 1 above, initially evaluate them for responsiveness, and determine an Apparent Low Bidder as specified herein. City will not open Envelopes "B" publicly. Except for the Apparent Low Bidder's Envelope "B" (or as otherwise provided in this Document 00200), all other Envelopes "B" will remain unopened.

16. **DETERMINATION OF APPARENT LOW BIDDER (Envelope "A").** Apparent Low Bid will be based solely on the total amount of all Bid items (including any Alternates and any items subject to revocation). The Bids will be opened and the apparent low bidder announced following the opening of all Bids.

17. **EVALUATION OF BIDDER RESPONSIBILITY (Envelope "B").**

A. City will open Apparent Low Bidder's Envelope "B" and check its contents for compliance with this paragraph 17. City will notify Apparent Low Bidder in writing of any deviations found and will provide Bidder the opportunity to respond in writing with reasonable clarifications but will not allow any changes in the nature of Bidder as a business entity.

B. If any Apparent Low Bidder is determined to be non-responsive or non-responsible, City may open the next Apparent Low Bidder's Envelope "B" pursuant to any procedures determined in its reasonable discretion, and proceed for all purposes as if this Apparent Low Bidder were the original Apparent Low Bidder. City shall use reasonable efforts to make the responsive responsible Apparent Low Bidder's Envelope "B" public on the first (1st) Working Day after the fourth (4th) Day following the opening of the Bidders' Envelope "A"s, subject to paragraph 25 below.

C. Document 00450, Statement of Qualifications for Construction Work, sets forth certain minimum criteria for a Bidder to be found responsible. Bidder's attention is called to the following minimum requirements for a Bidder to be found responsible to perform the Work:

1) Sufficient financial strength, stability and resources as measured by Bidder's equity, debt-to-assets ratio, and capability to finance the Work to be performed.

2) Ability to secure, in accordance with the Contract Documents, the required forms of Construction Performance Bond and Construction Labor and Material Payment Bond. Ability to obtain required insurance with coverage values that meet minimum requirements.

3) Subcontracting Prior Experience. Satisfactory experience on public works, including without limitation no history of default termination, excessively delayed completion or excessive defective work.

4) Projects Public Experience. Evidence that Bidder and its team, including without limitation its Subcontractors (hereafter, including Bidder if Bidder performs such Work itself, "designated Subcontractor(s)"), have the human and physical resources of sufficient quantity and quality to perform the Work under Contract Documents in a timely and Specification-compliant manner, to include:

a) Construction and management organizations with sufficient personnel and requisite disciplines, licenses, skills, experience, and equipment for the Project.
b) Minimum licensing requirements including evidence of a valid California contractor's license for the Bidder and evidence of requisite licenses for Key Personnel of Bidder or any designated Subcontractor(s).
c) Sufficiency of proposed quality assurance plan to meet the requirements of the Contract Documents.
d) Bidder's safety record.
e) Minimum experience requirements of the prime contractor including the completion of projects specified in Document 00450, Statement of Qualifications for Construction Work.

f) A field organization with skills, experience, and equipment sufficient to perform all on-Site work and necessary scheduling.
g) Expertise of Key Personnel to accomplish the duties and responsibilities required to perform the Work under Contract Documents. Minimum experience requirements of Key Personnel including the completion of projects of similar nature and complexity and having of experience on projects of similar nature and complexity.
h) Bidder shall expressly indicate which, if any, of the foregoing designated Subcontractor(s)' functions it will perform itself.

5) The following are minimum requirements for the designated Subcontractor(s) to be found responsible to perform the Work. (Unless the designated Subcontractor(s) is found responsible, Bidder will be found non-responsible.)

a) Evidence that Bidder's named Subcontractor has the human and physical resources of sufficient quantity and quality to perform those aspects of the Contract in a timely and Specification-compliant manner, to include:
b) Construction and management organizations with sufficient personnel and requisite disciplines, licenses, skills, experience, and equipment for the Project.
c) A field organization with skills, experience, and equipment sufficient to perform all on-Site work and necessary scheduling.
d) Installation of projects similar in nature and complexity to this Project as specified in Document 00450, Statement of Qualifications for Construction Work.
e) The installation supervisor shall have worked in a similar capacity on projects similar in nature and complexity to this Project per Document 00450, Statement of Qualifications for Construction Work.

18. **BID EVALUATION.** Bids shall remain open for sixty (60) Days following the opening of Bids. Bids may remain open for a longer period of time, if mutually agreed by the City and the apparent low Bidder. City may reject any or all Bids and waive any informalities or minor irregularities in the Bids. City also reserves the right, in its discretion, to reject any or all Bids and to re-Bid the Project. City reserves the right to reject any or all nonconforming, non-responsive, unbalanced, or conditional Bids, and to reject the Bid of any Bidder if City believes that it would not be in the best interest of Project to make an award to that Bidder, whether because the Bid is not responsive or the Bidder is unqualified or of doubtful financial ability or fails to meet any other pertinent standard or criteria established by City. For purposes of this paragraph, an "unbalanced Bid" is one having nominal prices for some work items and enhanced prices for other work items.

A. In evaluating Bids, City will consider Bidders' qualifications, whether or not the Bids comply with the prescribed requirements, unit prices and other data, as may be requested in Document 00400, Bid, or prior to the Notice of Award.

B. City may conduct reasonable investigations and reference checks of Bidder, proposed Subcontractors, suppliers and other persons and organizations as City deems necessary to assist in the evaluation of any Bid and to establish Bidder's responsibility, qualifications, financial ability, proposed Subcontractors, suppliers, and other persons and organizations to perform and furnish the Work in accordance with the Contract Documents to City's satisfaction within the prescribed time. Submission of a Bid constitutes Bidder's consent to the foregoing. City shall have the right to consider information provided by sources other than Bidder. City shall also have the right to communicate directly with Bidder's surety regarding Bidder's bonds.

C. Discrepancies between the multiplication of units of Work and unit prices will be resolved in favor of the unit prices. Discrepancies between the indicated sum of any column of figures and the correct sum thereof will be resolved in favor of the correct sum. Discrepancies between written words and figures will be resolved in favor of the words.

D. Quantities stated in the Bidding Documents are approximate only and are subject to correction upon final measurement of the Work, and are subject further to the rights reserved by the City to increase or diminish the amount of work under any classification as advantages to design or construction needs require.

E. City may determine whether a Bidder is qualified in its sole discretionary judgment.

19. **AWARD.** If the Contract is to be awarded, it will be awarded to the lowest responsible and responsive Bidder. Following completion of all required City procedures and receipt of all City approvals, City will issue Document 00510, Notice of Award to successful Bidder.

20. **BID PROTEST.** Any Bid protest must be submitted in writing to the City Clerk's Office (Attention: Project Engineer), before 3:30 p.m. on the first (1st) Working Day after the fourth (4th) Day following the opening of Bids.

A. The initial protest document must contain a complete statement of the basis for the protest.

B. The protest must refer to the specific portion of the document that forms the basis for the protest.

C. The protest must include the name, address, and telephone number of the person representing the protesting party.

D. Only Bidders who the City otherwise determines are responsive and responsible are eligible to protest a Bid; protests from any other Bidder will not be considered. In order to determine whether a protesting Bidder is responsive and responsible, City may open and evaluate information contained in any protesting Bidder's Envelope "B", and conduct the same investigation and evaluation as City is entitled to take regarding an Apparent Low Bidder. Any such opened Envelope "B" shall also be subject to all provisions of paragraph 25.

E. The party filing the protest must concurrently transmit a copy of the initial protest document and any attached documentation to all other parties with a direct financial interest that may be adversely affected by the outcome of the protest. Such parties shall include all other Bidders who appear to have a reasonable prospect of receiving an award depending upon the outcome of the protest.

1) The procedure and time limits set forth in this paragraph are mandatory and are Bidder's sole and exclusive remedy in the event of Bid protest. Bidder's failure to comply with these procedures shall constitute a waiver of any right to further pursue the Bid protest, including filing a Government Code Claim or legal proceedings. A Bidder may not rely on a protest submitted by another Bidder, but must timely pursue its own protest.

21. **POST-NOTICE OF AWARD REQUIREMENTS.** After Notice of Award, the successful Bidder must execute and submit the documents indicated in Document 00510, Notice of Award.

A. City shall have the right to communicate directly with Apparent Low Bidder's proposed performance bond surety, to confirm the performance bond. City may elect to extend the time to receive faithful performance and labor and material payment bonds.

B. Successful Bidder's failure to submit the documents required herein, in a proper and timely manner, entitles City to rescind its award, and to cause Bidder's Bid security to be forfeited as provided herein.

22. **FAILURE TO EXECUTE AND DELIVER DOCUMENTS.** If Bidder to whom Contract is awarded shall, within the period described in Document 00510, Notice of Award, fails or neglect to execute and deliver all required Contract Documents and file all required bonds, insurance certificates, and other documents, City may, in its sole discretion, foreclose on Bidder's deposit surety bond, or deposit Bidder's cashier's check or certified check for collection, and retain the proceeds thereof as liquidated damages for Bidder's failure to enter into the Contract Documents. Bidder agrees that calculating the damages City may suffer as a result of Bidder's failure to execute and deliver all required Contract Documents would be extremely difficult and impractical and that the amount of Bidder's required Bid security shall be the agreed and presumed amount of City's damages. In addition, upon such failure City may determine the next Apparent Low Bidder and proceed accordingly.

23. **MODIFICATION OF COMMENCEMENT OF WORK.** City expressly reserves the right to modify the date for the Commencement of Work under the Contract and to independently perform and complete work related to the Project. City accepts no responsibility to Contractor for any delays attributed to its need to complete independent work at the Site.

24. **WITHDRAWAL OF BIDS.** Bidders may withdraw their Bids at any time prior to the Bid opening time fixed in this Document 00200, only by written request for the withdrawal of Bid filed with the City at the City's office. Bidder or its duly authorized representative shall execute request to withdraw Bid. The submission of a Bid does not commit the City to award a contract for the Project, to pay costs incurred in the preparation of a Bid, or to procure or contract for any goods or services.

25. **PUBLIC RECORDS ACT REQUESTS.**

A. Per the Public Records Act, City will make available to the public Bidder's SOQ (if Bidder's Envelope "B" is opened), all correspondence and written questions submitted during the Bid period, all Bid submissions opened in accordance with the procedures of this Document 00200, and all subsequent Bid evaluation information. All submissions not opened will remain sealed and eventually be returned to the submitter. Except as otherwise required by law, City will not disclose trade secrets or proprietary financial information submitted that has been designated confidential by Bidder (including but not limited to the SOQ). Any such trade secrets or proprietary financial information that a Bidder believes should be exempted from disclosure shall be specifically identified and marked as such. Blanket-type identification by designating whole pages or sections shall not be permitted and shall be invalid. The specific information must be clearly identified as such.

B. Upon a request for records regarding this Bid, City will notify Bidder involved within ten (10) Days from receipt of the request of a specific time when the records will be made available for inspection. If the Bidder timely identifies any "proprietary, trade secret, or confidential commercial or financial" information that Bidder determines is not subject to public disclosure, and requests City to refuse to comply with the records request, Bidder shall take all appropriate legal action and defend City's refusal to produce the information in all forums; otherwise, City will make such information available to the extent required by applicable law, without restriction.

C. Information disclosed in the SOQ (if Envelope "B" is opened) and the attendant submissions are the property of City unless Bidder makes specific reference to data that is considered proprietary. Subject to the requirements in the Public Records Act, reasonable efforts will be made to prevent the disclosure of information except on a need-to-know basis during the evaluation process.

26. **CONFORMED CONSTRUCTION DOCUMENTS.** Following Award of Contract, City may prepare a conformed set of Contract Documents reflecting Addenda issued during bidding, which will, failing objection, constitute the approved set of Contract Documents.

27. **DEFINITIONS.** All abbreviations and definitions of terms used in this Document 00200 are set forth in Document 00050, References and Definitions.

END OF DOCUMENT

DOCUMENT 00210

INDEMNITY AND RELEASE AGREEMENT

Date _____, 201___

POTENTIAL BIDDER: _____

CITY: THE CITY OF SANTA CLARA, CALIFORNIA

SITE: 2339 Gianera Street, Santa Clara, California

PROJECT: NORTHSIDE TANKS SITE IMPROVEMENTS PROJECT (WA 30148)

In consideration of the City's permitting the undersigned potential bidder ("Bidder") to have access to, and to conduct investigations, tests and/or inspections on, the Site, Bidder hereby agrees as follows:

1. To the greatest extent permitted by law, Bidder hereby releases, and shall defend, indemnify and hold harmless City, and its officers, employees, consultants (including without limitation Consulting Engineer), representatives, and agents, and all other parties having any other interest in the Site, against any claim or liability, including attorney's fees, arising from or relating to any Site-related access, investigation, test, inspection and/or other activity conducted by Bidder or any of Bidder's officers, employees, consultants, representatives, and/or agents, regardless of whether claim or liability is caused in part by the negligence of City or by any released and indemnified party.

2. Bidder hereby waives the provisions of California Civil Code Section 1542 which provides as follows:

> A general release does not extend to claims that the creditor does not know or suspect to exist in his favor at the time of executing the release, which if known by him, must have materially affected his settlement with the debtor.

3. Bidder shall repair any damage to the Site or adjacent property resulting from activities authorized hereunder, and comply with and be subject to all other requirements and obligations described or referenced in Document 00320, Geotechnical Data and Existing Conditions.

4. Attached hereto (or to be delivered separately before Bidder's visit to the Site) is a certificate for comprehensive general liability insurance satisfying the requirements of Document 00700, General Conditions, and Document 00810, Insurance Requirements.

[Paragraph 5 and Signatures Follow on Next Page]

///

///

///

5. Although this Indemnity and Release Agreement is not a Contract Document (see Document 00520, Agreement), it shall be fully effective and binding regardless of whether Bidder submits a Bid for the subject Project, is awarded a contract for the Project, or otherwise.

_____
Name of Bidder

By: _____ By: _____
Signature Signature

Its: _____ Its: _____
Title (If Corporation: Chairman, President or Vice President)

Title (If Corporation: Secretary, Assistant Secretary, Chief Financial Officer or Assistant Treasurer)

END OF DOCUMENT

DOCUMENT 00250

BID CONTENTS, EVALUATION, SELECTION, AND AWARD

1. This Document summarizes the required Bid contents and City's procedures for opening and evaluating Bids and making award for:

CITY OF SANTA CLARA
NORTHSIDE TANKS SITE IMPROVEMENTS PROJECT

2. All abbreviations and definitions of terms used herein are defined in Document 00050, References and Definitions.

3. Bidders shall submit Bids in two (2) separate sealed Envelopes marked "Envelope A" and "Envelope B."

4. At the designated time of Bid opening, City will open the Envelope A submitted by each Bidder, initially evaluate it for responsiveness, and determine an Apparent Low Bidder as specified herein. City will not open the Envelope B submitted by each Bidder publicly, and except for the Apparent Low Bidder's Envelope B (or as otherwise provided in this Document 00250), they will remain unopened.

5. CONTENTS OF ENVELOPE A - BID PRICE (Checklist). Envelope A shall include:

- 5.1 ☐ Document 00400, Bid.
- 5.2 ☐ Document 00411, Bidder's Bond. Bid Security supplied in accordance with Document 00200, Instructions to Bidders.
- 5.3 ☐ Document 00420, Bidder Registration and Safety Experience.
- 5.4 ☐ Document 00421, Declaration of Contractor's License Status.
- 5.5 ☐ Document 00430, Subcontractors List.
- 5.6 ☐ Document 00435, Principals Interested in this Bid.
- 5.7 ☐ Document 00440, Affidavit of Compliance With Ethical Standards for Contractors.
- 5.8 ☐ Document 00460, Schedule of Major Equipment and Material Suppliers.
- 5.9 ☐ Document 00481, Non-Collusion Affidavit.
- 5.10 ☐ Document 00482, Bidder Certifications.
- 5.11 ☐ Document 00654, Worker's Compensation Insurance Statement.

6. CONTENTS OF ENVELOPE B - BIDDER QUALIFICATIONS. (Checklist) Envelope B shall include:

- 6.1 ☐ Document 00450, Statement of Qualifications for Construction Work.

7. DETERMINATION OF APPARENT LOW BIDDER. City will determine the Apparent Low Bidder in accordance with the methodology described in Paragraph 18 of Document 00200, Instructions to Bidders.

8. EVALUATION OF BIDDER RESPONSIBILITY (ENVELOPE B)

8.1 City will open Apparent Low Bidder's Envelope B and check its contents for compliance with Paragraph 6 above and this Paragraph 8. City will notify Apparent Low Bidder in writing of any deficiencies found and will provide Bidder the opportunity to respond in writing within 2 business days, with reasonable clarifications but will not allow any changes in the nature of Bidder as a business entity.

8.2 City will determine Bidder responsibility in accord with Document 00450, Statement of Qualifications for Construction Work.

END OF DOCUMENT

DOCUMENT 00320

GEOTECHNICAL DATA AND EXISTING CONDITIONS

1. SUMMARY

This Document 00320 sets forth the terms and conditions under which Bidder may review, study, use, or rely upon geotechnical data at or contiguous to the Site, and existing conditions information concerning existing conditions at or contiguous to the Site. This Document 00320, the available geotechnical data, and the supplied existing conditions information are not Contract Documents.

2. REPORTS AND INFORMATION

A. City, its consultants, and prior contractors may have collected documents providing a general description of the Site and conditions of the Work. These documents may consist of geotechnical reports for and around the Site, contracts, contract specifications, tenant improvement contracts, as-built drawings, utility drawings, and information regarding Underground Facilities. These reports, documents and other information are not part of the Contract Documents.

B. Bidders may inspect geotechnical reports and information regarding existing conditions available at the City's Office, and may obtain copies at cost of reproduction and handling upon Bidder's payment for the costs. These reports, documents and other information, are not part of the Contract Documents. Nevertheless, by submitting a Bid, Bidder accepts full responsibility for reviewing, knowing and understanding the contents of all of these materials.

C. Geotechnical reports may be included in the Project Manual and information regarding existing conditions may also be included in the Project Manual, but neither shall be considered part of the Contract Documents.

D. The geotechnical reports and data, and information regarding existing conditions and Underground Facilities at or contiguous to the Site, if any, are listed in the Special Provisions and are available for review through the City.

3. USE OF INFORMATION ON EXISTING CONDITIONS

A. Aboveground Existing Conditions. Under no circumstances shall City be deemed to make a warranty or representation of existing aboveground conditions, as-built conditions, or other aboveground actual conditions verifiable by reasonable independent investigation. These conditions are verifiable by Bidder by the performance of its own independent investigation that Bidder must perform prior to bidding and Bidder must not rely on the information supplied by City regarding existing conditions. Bidder represents and agrees that in submitting its Bid, it is not relying on any information regarding existing conditions supplied by City.

///

///

B. Underground Facilities. Information supplied regarding existing Underground Facilities at or contiguous to the Site is based on information furnished to City by others (e.g., the owners or builders of such Underground Facilities or others). Except as expressly set forth in this Document 00320, City does not assume responsibility for the accuracy, completeness or thoroughness of this information, and Bidder is solely responsible for any interpretation or conclusion drawn from this information. Except as expressly set forth in this Document 00320, City will be responsible only for the general accuracy of information regarding Underground Facilities, and only for those Underground Facilities that are owned by City. This express assumption of responsibility applies only if Bidder has conducted the independent investigation required of it and discrepancies were not apparent.

4. LIMITED RELIANCE PERMITTED ON CERTAIN INFORMATION

A. Geotechnical Data. Except as expressly set forth in this Document 00320, City does not warrant, and makes no representation regarding, the accuracy or thoroughness of any geotechnical data. Bidder represents and agrees that in submitting its Bid, it is not relying on any geotechnical data supplied by City, except as specifically set forth herein.

B. Bidder may rely upon the general accuracy of the "technical data" contained in the geotechnical reports and drawings identified above, but only insofar as it relates to subsurface conditions, provided Bidder has conducted the independent investigation required of it and discrepancies were not apparent. The term "technical data" in the referenced reports and drawings shall be limited as follows:

1. The term "technical data" shall include actual reported depths, reported quantities, reported soil types, reported soil conditions, and reported material, equipment, or structures that were encountered during subsurface exploration.

2. The term "technical data" does not include, and Bidder may not rely upon, any other data, interpretations, opinions or information shown or indicated in such drawings or reports that otherwise relate to subsurface conditions or described structures.

3. The term "technical data" shall not include the location of Underground Facilities.

4. Bidder may not rely on the completeness of reports and drawings for the purposes of bidding or construction. Bidder may rely upon the general accuracy of the "technical data" contained in such reports or drawings.

5. Bidder is solely responsible for any interpretation or conclusion drawn from any "technical data" or any other data, interpretations, opinions, or information contained in supplied geotechnical data.

///

///

///

///

///

5. INVESTIGATIONS

A. Before submitting a Bid, each Bidder shall be responsible to obtain such additional or supplementary examinations, investigations, explorations, tests, studies and data concerning conditions (surface, subsurface, and Underground Facilities) at or contiguous to the Site or otherwise, which may affect cost, progress, performance or furnishing of Work or which relate to any aspect of the means, methods, techniques, sequences or procedures of construction to be employed by Bidder and safety precautions and programs incident thereto or which Bidder deems necessary to determine its Bid for performing and furnishing the Work in accordance with the time, price and other terms and conditions of Contract Documents. Bidders shall advise City in writing during the Bid period of any questions, suppositions, inferences or deductions Bidders may have for City's review and response.

B. City has provided time in the period prior to bidding for Bidder to perform these investigations.

6. ACCESS TO SITE

Subject to reasonable scheduling, City will provide each Bidder access to the Site to conduct such examinations, investigations, explorations, tests, and studies, as each Bidder deems necessary for submission of a Bid. Bidders must fill all holes and clean up and restore the Site to its former conditions upon completion of such explorations, investigations, tests, and studies. Such investigations may be performed only under the provisions of Document 00200, Instructions to Bidders, and Document 00700, General Conditions, including, but not limited to, proof of insurance and obligation to indemnify against claims arising from such investigation work. Each Bidder shall supply all equipment required to perform any investigations, as each Bidder deems necessary. City has the right to limit the number of pieces of machinery operating at one time due to safety concerns.

END OF DOCUMENT

THIS PAGE

WAS INTENTIONALLY

LEFT BLANK

DOCUMENT 00340

HAZARDOUS MATERIALS SURVEYS

1. SUMMARY

This Document 00340 describes hazardous material surveys included with the Contract Documents and use of data therein.

2. REPORTS AND INFORMATION

City, its consultants, contractors, and tenants may have prepared documents providing a general description of the Site and locations of hazardous materials which are the subject of the work. The document consists of surveys included in or within this Project Manual, or made available for review and copying. The title(s) of the survey(s), if any, are listed in the Special Provisions.

3. INVESTIGATIONS

A. Before submitting a Bid, each Bidder shall be responsible for obtaining such additional or supplementary examinations, investigations, explorations, tests, studies, and data concerning conditions (surface, subsurface, and Underground Facilities) at or contiguous to the Site or otherwise that may affect cost, progress, performance or furnishing of Work or which relate to any aspect of the means, methods, techniques, sequences or procedures of construction to be employed by Bidder and safety precautions and programs or projects incident thereto or which Bidder deems necessary to determine its Bid for performing and furnishing Work in accordance with the time, price, and other terms and conditions of the Contract Documents.

B. City has provided time in the period prior to bidding for Bidder to perform these investigations.

C. On request of Bidder and execution of Document 00210, Indemnification and Release Agreement, and providing an insurance certificate as described therein, City will provide each Bidder access to Site to conduct such examinations, investigations, explorations, tests, and studies as each Bidder deems necessary for submission of a Bid. Bidder must fill all holes and clean up and restore the Site to its former condition upon completion of such explorations, investigations, tests, and studies. Any investigation performed by Bidder to verify hazardous materials/waste conditions must comply with the provisions of Document 00810, Supplementary Conditions – Hazardous Materials, including but not limited to the requirements regarding compliance with all laws, permits, giving of all notices, and indemnification. Bidders shall also present proof of insurance satisfactory to City.

END OF DOCUMENT

THIS PAGE WAS INTENTIONALLY LEFT BLANK

DOCUMENT 00400

BID

To be submitted as part of Envelope "A" by the time and date specified in Document 00200, Instructions to Bidders, Paragraph 1

CITY OF SANTA CLARA, CALIFORNIA

TO: **CITY COUNCIL OF THE CITY OF SANTA CLARA, CALIFORNIA**

THIS BID SUBMITTED BY:

_____
(Firm/Company Name)

RE: **CONTRACT NUMBER WA 30148, (NORTHSIDE TANKS SITE IMPROVEMENTS PROJECT)**

1. The undersigned Bidder proposes and agrees, if this Bid is accepted, to enter into an agreement with the City of Santa Clara, California, a chartered California municipal corporation, in the form included in the Contract Documents, Document 00520, Agreement, to perform and furnish all Work specified or indicated in the Contract Documents for the Contract Sum and within the Contract Time indicated in this Bid and in accordance with all other terms and conditions of the Contract Documents.

2. The Bidder accepts all of the terms and conditions of the Contract Documents, Document 00100, Invitation to Bid, and Document 00200, Instructions to Bidders, including without limitation, those dealing with the length of time this Bid remains open and the disposition of Bid security. The Bidder will sign and submit the Agreement, Insurance, Bonds and other documents required by Document 00200, Instructions to Bidders, by the time and in the manner set forth therein.

3. In submitting this Bid, the Bidder represents that:

   (a) Bidder has examined all of the Contract Documents and of the following Addenda (receipt of all of which is hereby acknowledged).

Addendum No.	Addendum Date	Signature of Bidder

   [Attach additional pages if necessary]

   (b) Bidder has visited the Site and performed all tasks, research, investigation, reviews, examinations, analysis, and given notices, regarding the Project and the Site, as set forth in Document 00520, Agreement.

   (c) Bidder has received and examined copies of the following technical specifications on City-provided, Contractor-installed equipment: None

(d) Bidder has given City prompt written notice of all conflicts, errors, ambiguities, or discrepancies that it has discovered in or among the Contract Documents, record documents and actual conditions; and the written resolution thereof through Addenda issued by City is acceptable to Contractor.

4. Based on the foregoing, Bidder proposes and agrees to fully perform the Work within the time stated and in strict accordance with the Contract Documents for the following sum of money listed in the following Bid Schedule:

SCHEDULE OF BID PRICES

All Bid items, including lump sums, unit prices, and Alternates, must be filled in completely. Bid items are described in the Special Provisions. Quote in figures only, unless words are specifically requested.

Base Bid Items

ITEM	DESCRIPTION	ESTIMATED QUANTITY	UNIT	UNIT PRICE	TOTAL
1	Mobilization/Demoblization	1	LS		$
2.	Site Demolition	1	LS		$
3.	8" & 12" DIP Reconfiguration	1	LS		$
4.	Flowmeter Vaults	2	EA		$
5.	Altitude Valve Modifications	2	EA		$
6.	2-inch Flush Valves	2	EA		$
7.	6-inch Flush Valves	2	EA		$
8.	Turbidimeters & Cabinet	1	LS		$
9.	Chlorine Analyzers	2	EA		$
10.	Fire Hydrant	1	EA		$
11.	Flexible Expansion Joint - 18"	2	EA		$
12.	Outlet Piping - 18" & 20" DIP	120	FT		$
13.	Valve Vaults	2	EA		$
14.	Actuated Outlet Butterfly Valves	2	EA		$
15.	Manual Outlet Butterfly Valves	3	EA		$
16.	Pump Station Interior Demolition	1	LS		$
17.	Pump Station Piping	1	LS		$

ITEM	DESCRIPTION	ESTIMATED QUANTITY	UNIT	UNIT PRICE	TOTAL
18.	Standby Generator	1	EA		$
19.	Building Annex	1	LS		$
20.	MCC, ATS, Electrical Equipment	1	LS		$
21.	Site Electrical & SCADA Improvements	1	LS		$
		TOTAL BASE BID PRICE			$

Total Base Bid Price: _____

(in Words)

5. Subcontractors for work included in all Bid items are listed on the attached Document 00430, Subcontractors List Form.

6. The undersigned Bidder understands that City reserves the right to reject this Bid.

7. If written notice of the acceptance of this Bid, hereinafter referred to as Notice of Award, is mailed or delivered to the undersigned Bidder within the time described in documents referenced in paragraph 2 of this Document 00400 or at any other time thereafter before it is withdrawn, the undersigned Bidder will execute and deliver the documents required by Document 00200, Instructions to Bidders, within the times specified therein. These documents include, but are not limited to Document 00520, Agreement, Document 00610, Construction Performance Bond, and Document 00620, Construction Labor and Material Payment Bond.

8. Notice of Award or request for additional information may be addressed to the undersigned at the address set forth below.

9. The undersigned Bidder herewith encloses a certified check or cashier's check of or on a responsible bank in the United States, or a corporate surety bond furnished by a surety authorized to do a surety business in the State of California, in the amount of ten percent (10%) of Total Bid Price, and made payable to City of Santa Clara.

10. The undersigned Bidder agrees to commence Work under the Contract Documents on the date established in Document 00700, General Conditions, and to complete all work within the time specified in Document 00520, Agreement. The undersigned Bidder acknowledges that City has reserved the right to delay or modify the commencement date. The undersigned Bidder further acknowledges City has reserved the right to perform independent work at the Site, the extent of such work may not be determined until after the opening of the Bids, and that the undersigned Bidder will be required to cooperate with such other work in accordance with the requirements of the Contract Documents.

11. The undersigned Bidder agrees that, in accordance with Document 00700, General Conditions, liquidated damages for failure to complete all Work in the Contract within the time specified in Document 00520, Agreement shall be as set forth in Document 00520, Agreement.

12. The names of all persons interested in the foregoing Bid as principals are:

(IMPORTANT NOTICE: If Bidder or other interested person (including any partner or joint venture

of any partnership or joint venture bidder, respectively) is a corporation, give the legal name of corporation, state where incorporated, and names of president and secretary thereof; if a partnership, give name of the firm and names of all individual co-partners composing the firm; if Bidder or other interested person is an individual, give first and last names in full).

NAME OF BIDDER: _____ licensed in accordance with an act for the registration of Contractors, and with license [_____]:
Expiration: _____

_____ _____
Where incorporated, if applicable

_____
Principals

I certify (or declare) under penalty of perjury under the laws of the State of California that the foregoing is true and correct.

By: _____
Its: _____
(If Corporation: Chairman, President or Vice President)

By: _____
Its: _____
(If Corporation: Secretary, Assistant Secretary, Chief Financial Officer or Assistant Treasurer)

NOTE: If the Bidder is a corporation, set forth the legal name of the corporation together with the signature of the officer or officers authorized to sign contracts on behalf of the corporation. If the Bidder is a partnership, set forth the name of the firm together with the signature of the partner or partners authorized to sign contracts on behalf of the partnership.

Officers authorized to sign contracts:

_____
_____
_____
_____

Business Address:

_____
_____
_____

Telephone: _____
Fax Number: _____

Date of Bid: _____

END OF DOCUMENT

DOCUMENT 00411

BIDDER'S BOND

KNOW ALL BY THESE PRESENTS:

That the undersigned [_____] as Principal and the undersigned as Surety are held and firmly bound unto the CITY OF SANTA CLARA, a chartered Municipal Corporation of the State of California ("City"), as obligee, in the penal sum of [_____] Dollars [($_____)] lawful money of the United States of America being at least ten percent (10%) of the aggregate amount of said Principal [_____]'s base Bid, for the payment of which, well and truly to be made, we bind ourselves, our successors, executors, administrators, and assigns, jointly and severally, firmly by these presents.

WHEREAS, the said Principal is submitting a Bid for City Contract Number WA 30148, NORTHSIDE TANKS SITE IMPROVEMENTS PROJECT.

THE CONDITION OF THIS OBLIGATION IS SUCH that if the Bid submitted by the said Principal be accepted and the Contract be awarded to said Principal and said Principal shall within the required periods enter into the Contract so awarded and provide the required Construction Performance Bond, Construction Labor and Material Payment Bond, insurance certificates, and all other endorsements, forms, and documents required under Document 00200, Instructions to Bidders, then this obligation shall be void, otherwise to remain in full force and effect.

IN WITNESS WHEREOF, the above bounden parties have executed this instrument this _____ day of _____, 201_.

(Corporate Seal)

By _____

Principal

_____

Surety

(Corporate Seal)

By _____

Attorney in Fact

Note: Written evidence of the authority of the person executing this affidavit on behalf of a corporation, partnership, joint venture, or any other legal entity, other than a sole proprietorship, shall be attached.

STATE OF CALIFORNIA)
County of _____)

On _____, 201__, before me _____ (here insert name and title of officer) a Notary Public in and for the State of California, personally appeared _____, personally known to me (or proved to me on the basis of satisfactory evidence) to be the person(s) whose name(s) is/are subscribed to the within instrument and acknowledged to me that he/she/they executed the same in his/her/their authorized capacity (ies), and that by his/her/their signature(s) on the instrument the person(s), or the entity upon behalf of which the person(s) acted, executed the instrument.

WITNESS my hand and official seal.

Signature _____ (Seal)

Note: Written evidence of the authority of the person executing this affidavit on behalf of a corporation, partnership, joint venture, or any other legal entity, other than a sole proprietorship, shall be attached.

STATE OF CALIFORNIA)
County of _____)

On _____, 201__, before me _____ (here insert name and title of officer) a Notary Public in and for the State of California, personally appeared _____, personally known to me (or proved to me on the basis of satisfactory evidence) to be the person(s) whose name(s) is/are subscribed to the within instrument and acknowledged to me that he/she/they executed the same in his/her/their authorized capacity (ies), and that by his/her/their signature(s) on the instrument the person(s), or the entity upon behalf of which the person(s) acted, executed the instrument.

WITNESS my hand and official seal.

Signature _____ (Seal)

END OF DOCUMENT

DOCUMENT 00420

BIDDER REGISTRATION AND SAFETY EXPERIENCE

1. INSTRUCTIONS

In order to register to undertake work for the City of Santa Clara, Bidder must submit this completed registration form; do not leave blanks.

INDEPENDENT CONTRACTOR REGISTRATION

Contractor's License # _____

Date: _____ Treasury (Fed Tax I.D.) # _____

Full Corporate Name of Company:

_____

Street Address: _____

_____

Mailing Address: _____

_____

Phone: _____ Fax: _____

Name of Principal Contact: _____

Type of Business: _____ Sole Proprietor _____ Partnership

_____ Non-Profit 501 C3 _____ Corporation

_____ Other (please explain: _____)

2. INSURANCE

A. Workers' Compensation:

Carrier: _____

Address: _____

Phone and Fax: _____

Policy Number: _____

B. General Liability:

Carrier: _____

Address: _____

Phone and Fax: _____

Policy Number: _____

Policy Limits: $ _____

A.M. Best Rating: _____

C. Automotive Liability:

Carrier: _____

Address: _____

Phone and Fax: _____

Policy Number: _____

Policy Limits: $ _____

A.M. Best Rating: _____

D. Professional Liability (if applicable):

Carrier: _____

Address: _____

Phone and Fax: _____

Policy Number: _____

Policy Limits: $ _____

A.M. Best Rating: _____

E. Environmental Impairment Liability (if applicable):

Carrier: _____

Address: _____

Phone and Fax: _____

Policy Number: _____

Policy Limits: $ _____

A.M. Best Rating: _____

3. SAFETY EXPERIENCE

A. The following statements as to safety experience of Bidder are submitted with Bid, as part thereof, and Bidder guarantees the truthfulness and accuracy of the information.

1. List Bidder's Interstate Experience Modification Rate for the last three years.

   a. 20___: _____
   b. 20___: _____
   c. 20___: _____

2. Use Bidder's last year's Cal/OSHA 200 log to fill in the following:

   a. Number of lost workday cases _____

   b. Number of medical treatment cases _____

   c. Number of fatalities _____

3. Employee hours worked last year _____

4. State the name of Bidder's safety engineer/manager or Site Safety Officer:

   _____

   Attach a resume or outline of this individual's safety and health qualifications and experience.

BIDDER CERTIFIES, UNDER PENALTY OF PERJURY, THAT THE FOREGOING INFORMATION IS CURRENT AND ACCURATE AND AUTHORIZES THE CITY OF SANTA CLARA AND ITS AGENTS AND REPRESENTATIVES TO OBTAIN A CREDIT REPORT AND/OR VERIFY ANY OF THE ABOVE INFORMATION.

_____ _____

SIGNATURE DATE

END OF DOCUMENT

THIS PAGE

WAS INTENTIONALLY

LEFT BLANK

DOCUMENT 00421

DECLARATION OF CONTRACTOR'S LICENSE STATUS[1]

I, _____, declare under penalty of perjury under the laws of the State of California that the following is true and correct:

A. The State Contractor's license number for the signatory Contractor is: _____.

B. The license expiration date is: _____.

Executed on _____, 201__ at _____, California.

Contractor shall keep Contractor's license current at all times.

CONTRACTOR

_____
[Contractor's Firm Name – Print or Type]

_____
[Signatory's Name – Print or Type]

_____
[Signature]

_____
[Capacity/Title in Contracting Firm – Print or Type]

END OF DOCUMENT

[1] California Business & Professions Code § 7028.15.

THIS PAGE

WAS INTENTIONALLY

LEFT BLANK

DOCUMENT 00430

SUBCONTRACTORS LIST

Bidder's Name: _____

Bidder submits the following information as to the Subcontractors Bidder intends to employ if awarded the Contract. Include only those Subcontractors proposed to receive more than one half of one percent (0.5%) of the Total Bid Amount.

Full Name of Subcontractor and Business Location: (City and State)	Contractor's License No.	Description of Work: Reference To Bid Items	Percentage of Contract Work

(Bidder to attach additional sheets if necessary)

END OF DOCUMENT

THIS PAGE

WAS INTENTIONALLY

LEFT BLANK

DOCUMENT 00435

PRINCIPALS INTERESTED IN THIS BID

THE NAMES OF ALL PERSONS WHO HAVE AN INTEREST IN THIS BID AS PRINCIPALS ARE AS FOLLOWS:

(Note: If Bidder is a corporation, list the names of the President, Secretary, Chief Financial Officer, General Manager thereof. If Bidder is a partnership, list the names of all partners comprising the firm. If Bidder is an individual, state first and last name in full.)

Principal's Name:	
Mailing Address:	
Title:	

Principal's Name:	
Mailing Address:	
Title:	

Principal's Name:	
Mailing Address:	
Title:	

Principal's Name:	
Mailing Address:	
Title:	

Note: Additional pages may be created by copying this page and editing the page numbers as necessary.

END OF DOCUMENT

THIS PAGE

WAS INTENTIONALLY

LEFT BLANK

DOCUMENT 00440

AFFIDAVIT OF COMPLIANCE WITH ETHICAL STANDARDS FOR CONTRACTORS CITY OF SANTA CLARA

I, _____, being first duly sworn, depose and say to the City of Santa Clara ("City") that:

1. I am _____ *[insert title or capacity]* of _____ *[insert entity name]* ("Bidder").

2. I hereby state that I have read and understand the attached Document 00441, Ethical Standards for Contractors. I have examined appropriate business records, and I have made inquiry of those individuals potentially included within the definition of "Contractor" contained in Document 00441, Ethical Standards for Contractors. I have authority to make these representations on my own behalf and on behalf of the legal entity herein identified.

3. Neither (a) Bidder nor (b) any individual(s) belonging to a category identified in footnote No. 1 of Document 00441, Ethical Standards for Contractors, has been convicted of any one or more of the crimes identified in Document 00441, Ethical Standards for Contractors, within the past five (5) years.

4. Notwithstanding award of any contract by City or performance thereunder, the City shall have all rights and remedies described in Document 00441, Ethical Standards for Contractors.

The above assertions are true and correct and are made under penalty of perjury under the laws of the State of California.

_____
Corporation, Partnership, etc.

_____
Signature

_____
Title

Note: Written evidence of the authority of the person executing this affidavit on behalf of a corporation, partnership, joint venture, or any other legal entity, other than a sole proprietorship, shall be attached.

STATE OF CALIFORNIA)
County of _____)

On _____, 201__, before me _____ (here insert name and title of officer) a Notary Public in and for the State of California, personally appeared _____, personally known to me (or proved to me on the basis of satisfactory evidence) to be the person(s) whose name(s) is/are subscribed to the within instrument and acknowledged to me that he/she/they executed the same in his/her/their authorized capacity (ies), and that by his/her/their signature(s) on the instrument the person(s), or the entity upon behalf of which the person(s) acted, executed the instrument.

WITNESS my hand and official seal.

Signature _____ (Seal)

END OF DOCUMENT

THIS PAGE

WAS INTENTIONALLY

LEFT BLANK

DOCUMENT 00441

ETHICAL STANDARDS FOR CONTRACTORS

Termination of Contract for Certain Acts.

A. City may, at its sole discretion, terminate any contract with Contractor if any one or more of the following occurs:

1. If Contractor[1] does any of the following:

   a. Is convicted[2] of operating a business in violation of any Federal, State or local law or regulation;

   b. Is convicted of a crime punishable as a felony involving dishonesty;[3]

   c. Is convicted of an offense involving dishonesty or is convicted of fraud or a criminal offense in connection with: (1) obtaining; (2) attempting to obtain; or (3) performing a public contract or subcontract;

   d. Is convicted of any offense which indicates a lack of business integrity or business honesty which seriously and directly affects the present responsibility of a City contractor or subcontractor; or

   e. Made (or makes) any false statement(s) or representation(s) with respect to the contract; or

2. If fraudulent, criminal, or other seriously improper conduct of any officer, director, shareholder, partner, employee, or other individual associated with Contractor can be imputed to Contractor when the conduct occurred in connection with the individual's performance of duties for or on behalf of Contractor, with Contractor's knowledge, approval or acquiescence, Contractor's acceptance of the benefits derived from the conduct shall be evidence of such knowledge, approval, or acquiescence.

B. City may also terminate any contract with Contractor if any one or more of the following occurs:

---

[1] For purposes of this Document 00441, the term "Contractor" (whether a person or a legal entity) means any of the following: an owner or co-owner of a sole proprietorship; a person who controls or who has the power to control a business entity; a general partner of a partnership; a principal in a joint venture; or a person who owns more than ten percent (10%) of the outstanding stock of a corporation and who is active in the day to day operations of that corporation.

[2] For purposes of this Document 00441, the terms "convicted" or "conviction" mean a judgment or conviction of a criminal offense by any court of competent jurisdiction, whether entered upon a verdict or a plea, and includes a conviction entered upon a plea of nolo contendere within the past five (5) years.

[3] For purposes of this Document 00441, the term "dishonesty" includes, without limitation, embezzlement, theft, forgery, bribery, falsification or destruction of records, making false statements, failure to pay tax obligations, receiving stolen property, collusion or conspiracy.

1. If Contractor becomes "insolvent";[4]

2. If City determines that Contractor no longer has the financial capability or business experience (including without limitation loss of personnel deemed essential by City) to perform successfully the terms of, or operate under, any contract with City; or

3. If City determines that Contractor fails to submit information, or submits false information, which is required to perform or be awarded a contract with City, including, but not limited to, Contractor's failure to maintain a required state issued license, failure to obtain a City business license (if applicable), or failure to purchase and maintain bonds and/or insurance policies required under any contract with City.

C. In the event a prospective Contractor (or bidder) is ruled ineligible (debarred) to participate in a contract award process, or a contract is terminated pursuant to the these provisions, Contractor may appeal City's action to the City Council by filing a written request with the City Clerk to have the matter heard within ten (10) days of the notice given by City. The matter will be heard within thirty (30) days of the filing of the appeal request with the City Clerk. Contractor shall have the burden of proof on the appeal. Contractor shall have the opportunity to present evidence, both oral and documentary, and argument.

END OF DOCUMENT

[4] For purposes of this Document 00441, Contractor is "insolvent" if it is unable to pay its debts as they become due, transfers assets in fraud of creditors, makes an assignment for the benefit of creditors, files a petition under any section or chapter of the federal Bankruptcy Code (11 U.S.C.), as amended, or under any similar law or statute of the United States or any state thereof, is adjudged bankrupt or insolvent in proceedings under such laws, or a receiver or trustee is appointed for all or substantially all of Contractor's assets.

DOCUMENT 00450

STATEMENT OF QUALIFICATIONS FOR CONSTRUCTION WORK

Instructions: Each Bidder must answer each and every question in this Document 00450, Statement of Qualifications for Construction Work (SOQ). Bidders must fully answer each and every question, including subparts, under penalty of perjury. Any Bidder who fails to complete this SOQ or any part of it, may be deemed to have submitted a non-responsive bid and the bid may not receive any further consideration.

1. Bidder's Experience. Describe at least three (3) projects completed in the past five (5) years substantially similar in nature and complexity to the Project. (For purposes of this question, "substantially similar" shall mean the same type of work, such as piping reconfiguration and installation of generator and pump station modification at the at-grade water tank, etc., where the contract amount of each project was at least $250,000.)

2. Key Personnel. Please attach copies of the resumes of all key personnel that will work on the Project. The resumes must include all of the following minimum information:

   - Name
   - Proposed Assignment on the Project
   - Years of Experience
   - Education (degree, year obtained, school)
   - Professional Registrations
   - Experience directly related to the Project
   - Fluency in English

3. Licensing.

   (a) Does Bidder have valid and current California "A" Contractor's License for the proposed work?

   (b) Has Bidder's license been suspended or revoked at any time during the last five years? If Bidder answers yes, please give the date, duration of the suspension and reason for the suspension or revocation.

4. Safety.

   (a) Has any government agency, such as Cal/OSHA, Federal OSHA or the EPA cited Bidder for any reason in the last five years? If Bidder answers "yes" to this question, attach a summary of each citation and how it was resolved.

   (b) Briefly describe Bidder's safety program, including safety meetings, training, and inspections.

5. Prevailing Wages. Has Bidder been citied during the last five years for failing to pay prevailing wages? If Bidder answers "yes" to this question, please state how many times Bidder has been cited and give the dates for and a summary of each citation.

6. Performance. Has Bidder defaulted, been terminated for cause or had a Surety complete a contract for Bidder in the last five years? If Bidder answers "yes" to this question, attach a description of the project, the name of the project, the name of the public agency and the public agency's contact person's name, title, and phone number.

7. Claims. Has Bidder had any claims, litigation or disputes that resulted in mediation, arbitration or litigation in the last five years? If Bidder answers "yes" to this question, please give the name of the project, amount of the project, amount of the claim, litigation or dispute, and outcome of the claim, litigation or dispute, including the dollar amount of any settlements.

8. Bankruptcy. Has Bidder reorganized under any bankruptcy law during the last five years and if "yes", when?

9. Insurance. Has Bidder ever been terminated by an insurance company, if "yes" why and when were you terminated?

10. Organization. Has Bidder used any other names or reorganized its structure during the last five years? If "yes", please state all former names or structures and the date(s) of the change(s).

11. Litigation History. Description of litigation history for the past ten (10) years, including names of involved parties, nature of dispute, and disposition.

Bidder hereby certifies that responses provided above are true, complete, and accurate. Bidder makes this certification under penalty of perjury of the laws of the State of California.

_____
COMPANY NAME

_____
SIGNATURE

_____
PRINTED NAME

_____
TITLE

_____ _____
DATE TIME

END OF DOCUMENT

DOCUMENT 00451

BIDDER RESPONSIBILITY FORM
ENVELOPE B

Instructions: Each Bidder must answer each and every question in this "Bidder Responsibility Form." Bidders must fully answer each and every question, including subparts, under penalty of perjury. Any Bidder who fails to complete this Bidder Responsibility Form or any part of it, will be deemed to have submitted a non-responsive bid and the bid will not receive any further consideration.

1. Bidder's Experience. Describe the Bidder's experience constructing public works projects substantially similar to the Project. (For purposes of this question, "substantially similar" shall mean the same type of work, such as paving, commercial building construction, etc., where the contract amount was within $50,000 of the estimated cost of the Project.)

2. Key Personnel. Please attach copies of the resumes of all key personnel that will work on the Project. The resumes must include all of the following minimum information:

   - Name
   - Proposed Assignment on the Project
   - Years of Experience
   - Education (degree, year obtained, school)
   - Professional Registrations
   - Experience directly related to the Project
   - Fluency in English

3. Licensing.

   (a) Does Bidder have valid and current California "A" Contractor's License for the proposed work?

   (b) Has Bidder's license been suspended or revoked at any time during the last five years? If Bidder answers yes, please give the date, duration of the suspension and reason for the suspension or revocation.

4. Safety.

   (a) Has any government agency, such as Cal/OSHA, Federal OSHA or the EPA cited Bidder for any reason in the last five years? If Bidder answers "yes" to this question, attach a summary of each citation and how it was resolved.

   (b) Briefly describe Bidder's safety program, including safety meetings, training, and inspections.

5. Prevailing Wages. Has Bidder been citied during the last five years for failing to pay prevailing wages? If Bidder answers "yes" to this question, please state how many times Bidder has been cited and give the dates for and a summary of each citation.

///

///

6. Performance. Has Bidder defaulted, been terminated for cause or had a Surety complete a contract for Bidder in the last five years? If Bidder answers "yes" to this question, attach a description of the project, the name of the project, the name of the public agency and the public agency's contact person's name, title, and phone number.

7. Claims. Has Bidder had any claims, litigation or disputes that resulted in mediation, arbitration or litigation in the last five years? If Bidder answers "yes" to this question, please give the name of the project, amount of the project, amount of the claim, litigation or dispute, and outcome of the claim, litigation or dispute, including the dollar amount of any settlements.

8. Bankruptcy. Has Bidder reorganized under any bankruptcy law during the last five years and if "yes", when?

9. Insurance. Has Bidder ever been terminated by an insurance company, if "yes" why and when were you terminated?

10. Organization. Has Bidder used any other names or reorganized its structure during the last five years? If "yes", please state all former names or structures and the date(s) of the change(s).

Bidder hereby certifies that responses provided above are true, complete, and accurate. Bidder makes this certification under penalty of perjury of the laws of the State of California.

_____
COMPANY NAME

_____
SIGNATURE

_____
PRINTED NAME

_____
TITLE

_____ _____
DATE TIME

END OF DOCUMENT

DOCUMENT 00460

SCHEDULE OF MAJOR EQUIPMENT AND MATERIAL SUPPLIERS

The undersigned Bidder represents that, if awarded the Contract, the items of major equipment and materials specified below will be supplied by the manufacturers or suppliers specified below. By so indicating, bidder warrants that the equipment and materials manufacturer and/or supplied by the named manufacturer or supplier will be provided on the Project unless review of submittal information or performance under tests reveals that the equipment or material does not meet Contract requirements. Failure to indicate a manufacturer or supplier listed in the following schedule may render the Bid non-responsive and may be the basis for rejection of the Bid.[1]

Item	Manufacturer or Supplier
1. Engine Generator Unit	_____
2. Prefabricated Metal Building	_____

Bidder: _____

_____
SIGNATURE

_____, 201__
DATE

END OF DOCUMENT

[1] Bidder's attention is directed to the Special Provisions for other requirements regarding these matters.

THIS PAGE

WAS INTENTIONALLY

LEFT BLANK

DOCUMENT 00481

NON-COLLUSION AFFIDAVIT
PUBLIC CONTRACT CODE §7106

NON-COLLUSION AFFIDAVIT TO BE EXECUTED BY BIDDER AND SUBMITTED WITH BID

The undersigned declares:

I am the _____ of _____, the party making the foregoing bid.

The bid is not made in the interest of, or on behalf of, any undisclosed person, partnership, company, association, organization, or corporation. The bid is genuine and not collusive or sham. The bidder has not directly or indirectly induced or solicited any other bidder to put in a false or sham bid. The bidder has not directly or indirectly colluded, conspired, connived, or agreed with any bidder or anyone else to put in a sham bid, or to refrain from bidding. The bidder has not in any manner, directly or indirectly, sought by agreement, communication, or conference with anyone to fix the bid price of the bidder or any other bidder, or to fix any overhead, profit, or cost element of the bid price, or of that of any other bidder. All statements contained in the bid are true. The bidder has not, directly or indirectly, submitted his or her bid price or any breakdown thereof, or the contents thereof, or divulged information or data relative thereto, to any corporation, partnership, company, association, organization, bid depository, or to any member or agent thereof, to effectuate a collusive or sham bid, and has not paid, and will not pay, any person or entity for such purpose.

Any person executing this declaration on behalf of a bidder that is a corporation, partnership, joint venture, limited liability company, limited liability partnership, or any other entity, hereby represents that he or she has full power to execute, and does execute, this declaration on behalf of the bidder.

I declare under penalty of perjury under the laws of the State of California that the foregoing is true and correct and that this declaration is executed on _____ [date], at _____[city], _____[state].

_____
(Name of Bidder)

_____
(Signature of Principal)

(If Bidder is a partnership or a joint venture, this affidavit must be signed and sworn to by every member of the partnership or venture.)

(If Bidder [including any partner or venturer of a partnership or joint venture] is a corporation, this affidavit must be signed by the Chairman, President, or Vice President and by the Secretary, Assistant Secretary, Chief Financial Officer, or Assistant Treasurer.)

(If Bidder's affidavit on this form is made outside the State of California, the official position of the person taking such affidavit shall be certified according to law.)

[Notarization Follows on Next Page]

///

STATE OF CALIFORNIA)
County of _____)

On _____, 201__, before me _____ (here insert name and title of officer) a Notary Public in and for the State of California, personally appeared _____, personally known to me (or proved to me on the basis of satisfactory evidence) to be the person(s) whose name(s) is/are subscribed to the within instrument and acknowledged to me that he/she/they executed the same in his/her/their authorized capacity(ies), and that by his/her/their signature(s) on the instrument the person(s), or the entity upon behalf of which the person(s) acted, executed the instrument.

WITNESS my hand and official seal.

Signature _____ (Seal)

END OF DOCUMENT

DOCUMENT 00482

BIDDER CERTIFICATIONS

TO BE EXECUTED BY ALL BIDDERS AND SUBMITTED WITH BID

The undersigned Bidder certifies to the City of Santa Clara, a chartered California municipal corporation, acting by and through its City Council, as set forth in sections 1 through 5 below.

1. CERTIFICATE OF NON-DISCRIMINATION

By my signature hereunder, on behalf of the Bidder making this Bid, the undersigned certifies that there will be no discrimination in employment with regard to race, color, religion, gender, sexual orientation, or national origin; that all federal, state, and local directives and executive orders regarding non-discrimination in employment will be complied with; and that the principle of equal opportunity in employment will be demonstrated positively and aggressively.

2. STATEMENT OF CONVICTIONS

By my signature hereunder, I hereby swear, under penalty of perjury, that no more than one (1) final, unappealable finding of contempt of court by a Federal Court has been issued against Bidder within the past two (2) years because of failure to comply with an order of a Federal Court or to comply with an order of the National Labor Relations Board.

3. PREVIOUS DISQUALIFICATIONS

By my signature hereunder, I hereby swear, under penalty of perjury, that the below indicated Bidder, any officer of such Bidder, or any employee of such Bidder who has a proprietary interest in such Bidder, has never been disqualified, removed or otherwise prevented from bidding on, or completing a Federal, State, or local government project because of a violation of law or a safety regulation except as indicated on the separate sheet attached hereto entitled "Previous Disqualifications." If such exceptions are attached, please explain the circumstances.

4. CERTIFICATION OF WORKER'S COMPENSATION INSURANCE

By my signature hereunder, as the Contractor, I certify that I am aware of the provisions of Section 3700 of the Labor Code which require every employer to be insured against liability for worker's compensation or to undertake self-insurance in accordance with the provisions of that Code, and I will comply with such provisions before commencing the performance of the work of this Contract.

///

///

///

///

///

///

5. CERTIFICATION OF PREVAILING WAGE RATES AND RECORDS

By my signature hereunder, as the Contractor, I certify that I am aware of the provisions of Section 1773 of the Labor Code, which requires the payment of prevailing wage on public projects. Also, that the Contractor and any subcontractors under the Contractor shall comply with Section 1776, regarding wage records, and with Section 1777.5, regarding the employment and training of apprentices, of the Labor Code. It is the Contractor's responsibility to ensure compliance by any and all subcontractors performing work under this Contract.

Bidder: _____

Type of Entity: _____

By: _____

(Authorized signature on behalf of Contractor)

Name: _____

Title: _____

Local Address: _____

_____

_____

Telephone ( ) _____

Fax: ( ) _____

NOTE: If the Bidder is a corporation, set forth the legal name of the corporation together with the signature of the officer or officers authorized to sign contracts on behalf of the corporation. If the Bidder is a partnership, set forth the name of the firm together with the signature of the partner or partners authorized to sign contracts on behalf of the partnership. All signer(s) represent and warrant that they are authorized to sign this Bid on behalf of Bidder.

END OF DOCUMENT

DOCUMENT 00490

ADDENDA
(Sample)

City of Santa Clara
Water and Sewer Utilities Department

Addendum Number: [___]

Project: NORTHSIDE TANKS SITE IMPROVEMENTS PROJECT

Invitation Number: WA 30148
Date: _____, 201__
Bid Date: July 30, 2014
Bid Opening: 3:00 P.M.

TO ALL BIDDERS:
The following changes, deletions, additions, and/or clarifications shall be made to the drawings and specifications for the work of the above Project:

SPECIFICATIONS:

DRAWINGS:

This addendum is part of the Contract Documents and in case of conflict among drawings, specifications, and this addendum, the addendum shall govern.

Bidders shall acknowledge receipt of this addendum by inserting the addendum number and date and signing where indicated on DOCUMENT 00400, BID. Failure to do so may subject bidder to disqualification based upon a non-responsive bid.

Issued by the City of Santa Clara

_____
Shilpa B. Mehta, P.E.
Principal Engineer – Water and Sewer

END OF DOCUMENT

THIS PAGE

WAS INTENTIONALLY

LEFT BLANK

DOCUMENT 00510

NOTICE OF AWARD

_____, 201__

DELIVERY VIA:
- ☐ Regular U.S. Mail
- ☐ Express U.S. Mail
- ☐ Overnight Carriers, (FedEx, UPS, DHL etc.)
- ☐ Facsimile @ Fax No. (___)_____-_____and/or
- ☐ Electronic Mail

BIDDER'S NAME: _____

BIDDER'S ADDRESS: _____

ATTENTION: _____

CONTRACT REFERENCE: City of Santa Clara Contract No. WA 30148

PROJECT REFERENCE: NORTHSIDE TANKS SITE IMPROVEMENTS PROJECT

Congratulations, the intent of this letter is to inform you that the bid you submitted to the City of Santa Clara on _____, 201__ for the above referenced public works contract ("Contract"), has been received and reviewed by City staff and your firm has been determined to be the lowest responsible and responsive bidder. Based on your bid and City staff recommendation, the Santa Clara City Council awarded the Contract to your firm on _____, 201__ for the construction of the [_____] PROJECT (the "Project"). The Total Contract Price for this Contract is _____ thousand, _____ hundred, _____ dollars and _____ cents ($_____.00).

However, before the City can execute this Contract and issue a Notice to Proceed to you to begin work on the Project, you must deliver the following documents to the Office of the City Clerk at 1500 Warburton Avenue, Santa Clara, CA 95050, within the next fifteen (15) days (on or before 5:00 p.m. on _____, 201__):

1. One (1) complete original of Contract Document 00520, Agreement, having original signature(s) of authorized representatives of your firm on the signature page.

2. One (1) complete original of Contract Document 00610, Construction Performance Bond, indicating that the required bond has been purchased in an amount equal to the Contract price. The bond must be fully executed by both authorized representatives of your firm and your surety. The signature of the surety must be notarized and the notary form attached to Document 00610.

3. One (1) complete original of Contract Document 00620, Construction Labor and Materials Payment Bond, indicating that the required bond has been purchased in amount equal to the Contract price. The bond must be fully executed by both authorized representatives of your firm and your surety. The signature of the surety must be notarized and the notary form attached to Document 00620.

4. One (1) completed original of Contract Document 00630, Guaranty, with original signature(s) of authorized representatives of your firm.

5. One (1) complete copy of all documentary information received or generated by Contractor in preparation of Bid prices for the Contract Documents as set forth in Contract Document 00670, Escrow Bid Documents.

6. Deliver to the City's insurance compliance contractor, Ebix BPO, all of the required Certificate(s) of Insurance showing proof that all of the required insurance policies, as well as all of the required policy endorsements, have been purchased and properly completed. Also, please provide a written indication that the required insurance company ratings have been met, as set forth in Contract Document 00820, Insurance Requirements. Please forward all insurance compliance information to:

City of Santa Clara Engineering Department
c/o Ebix BPO - Insurance Compliance
P.O. 12010-S2
Hemet, CA 92546-8010
Telephone: (951) 766-2280
Fax: (770) 325-0409

(or for courier delivery):
151 North Lyon Avenue
Hemet, CA 92543-3831

NOTE: Please **do not** send the insurance compliance documents to the City offices. Doing so will only delay the necessary review and the issuance of the Notice to Proceed.

IMPORTANT: Please note that failure to comply with any of the above referenced conditions within the time period specified above will entitle City, at its sole discretion, to: 1) consider your Bid abandoned; 2) annul this Notice of Award; and/or 3) declare your Bid security forfeited. Even if the City does not choose to exercise any of these options, any delay in providing said documentation beyond the deadline indicated above will not extend the Contract Time allowed for performing the Work as set forth in the Contract Documents. Any time delay caused by failure to comply with the required documentation set forth in this Notice of Award will be subtracted from the time allowed to perform the Work as specified in Document 00520, Agreement, of the Contract Documents.

After a Notice to Proceed has been issued and upon commencement of the Work under this Contract, your firm, and each of your subcontractors, must certify and make available for inspection, payroll records on forms provided by the Division of Labor Standards Enforcement, in accordance with Section 1776 of the California Labor Code.

After you have complied with the conditions of this Document 00510, Notice of Award, the City will provide one fully signed copy of Contract Document 00520, Agreement, to you for your records.

Once again, congratulations on being awarded this Contract. We look forward to working with your firm on this Project. If you have any questions regarding this Notice of Award, please contact Howard Salamanca in the City Water and Sewer Utilities Department at 1+(408) 615-2012.

Sincerely,

_____
Rod Diridon, Jr., City Clerk
City of Santa Clara, California,
a chartered California municipal corporation

END OF DOCUMENT

DOCUMENT 00520

AGREEMENT

City of Santa Clara Contract Number WA 30148
Project Title: NORTHSIDE TANKS SITE IMPROVEMENTS PROJECT

PREAMBLE

This Agreement ("Agreement") is made and entered into on this_____ day of _____, 201__, (the "Effective Date") by and between _____, a _____ corporation, with its primary business address located at _____ ("Contractor"), and the City of Santa Clara, California, a chartered California municipal corporation, with its primary business address at 1500 Warburton Avenue, Santa Clara, California 95050 ("City"). City and Contractor may be referred to herein individually as a "Party" or collectively as the "Parties" or the "Parties to this Agreement."

The Parties agree as follows:

AGREEMENT PROVISIONS

Article 1. Work

1.1 Contractor shall complete all Work specified in the Contract Documents, in accordance with the Specifications, Drawings, and all other terms and conditions included in the Contract Documents.

Article 2. Agency and Notices to City

2.1 City has designated the Principal Engineer – Water and Sewer or his/her designee to act as City's Representative(s), who will represent City in performing City's duties and responsibilities and exercising City's rights and authorities in Contract Documents. City may change the individual(s) acting as City's Representative(s), or delegate one or more specific functions to one or more specific City's Representatives, including without limitation engineering, architectural, inspection and general administrative functions, at any time with notice and without liability to Contractor. Each City Representative is the beneficiary of all Contractor obligations to City, including without limitation, all releases and indemnities.

2.2 City has designated the Principal Engineer – Water and Sewer Utilities or his/her designee to act as Construction Manager. City may assign all or part of the City Representative's rights, responsibilities and duties to Construction Manager. City may change the identity of the Construction Manager at any time with notice and without liability to Contractor.

2.3 City has designated GHD Inc. to act as Consulting Engineers. City may change the identity of the Consulting Engineer(s) at any time with notice and without liability to Contractor.

2.4 All notices or demands to City under the Contract Documents shall be delivered to the City's Representative at 1500 Warburton Avenue, Santa Clara, California 95050, or to such other person(s) and address(es) as City shall provide to Contractor.

Article 3. Contract Time and Liquidated Damages

3.1 Contractor shall commence Work at the Site on the date established in Document 00550, Notice to Proceed. The City reserves the right to modify or alter the Commencement Date of the Work due to the need to complete other City provided work at the Site. Contractor shall complete the Work within the following Schedule reflecting the date the Contract Time commences to run as set forth in Document 00550, Notice to Proceed and Document 00700, General Conditions:

3.1.1 The Work shall reach Substantial Completion within one hundred twenty (120) Calendar Days from the date when the Contract Time commences to run.

3.1.2 The Work shall reach Final Completion within one hundred fifty (150) Calendar Days from the date when the Contract Time commences to run.

3.2 Liquidated Damages.

City and Contractor recognize that time is of the essence of this Agreement and that City will suffer financial loss in the form of lost revenues, contract administration expenses (including project management and consultants' expenses), delay and loss of public use, if all or any part of the Work is not completed within the time specified in paragraph 3.1 above plus any extensions thereof allowed in accordance with the Contract Documents. Consistent with Article 15 of Document 00700, General Conditions, Contractor and City agree that because of the nature of the Project, it would be impractical or extremely difficult to fix the amount of actual damages incurred by City because of a delay in completion of all or any part of the Work.

Accordingly, City and Contractor agree that as liquidated damages for delay, Contractor shall pay City:

3.2.1 $1,500 for each Day that expires after the time specified herein for Contractor to achieve Substantial Completion, until the Work reaches Substantial Completion.

3.2.2 $2,000 for each Day that expires after the time specified herein for Contractor to achieve Final Completion, until the Work reaches Final Completion.

These measures of liquidated damages shall apply cumulatively and shall be presumed to be, except as provided herein, the damages suffered by City resulting from the delay in completion of the Work.

3.3 Liquidated damages for delay shall only cover administrative, overhead, interest on bonds, and general loss of public use damages suffered by City as a result of delay. Liquidated damages shall not cover the cost of completion of the Work, damages resulting from defective work, lost revenues or costs of substitute facilities, or damages suffered by others who then seek to recover their damages from City (for example, delay claims of other contractors, subcontractors, tenants, or other third-parties), and defense costs thereof.

Article 4. Total Contract Price

4.1 City shall pay Contractor the Contract Sum for completion of Work in accordance with Contract Documents as shown on the Contractor's Bid, Document 00400, incorporated by this reference.

///

4.2 The Contract Sum is all inclusive and includes all Work; all federal, state, and local taxes on materials and equipment, and labor furnished by Contractor, its subcontractors, subconsultants, architects, engineers, and vendors or otherwise arising out of Contractor's performance of the Work, including any increases in any such taxes during the term of this Agreement; and any duties, fees, and royalties imposed with respect to any materials and equipment, labor or services. The taxes covered hereby include (but are not limited to) occupational, sales, use, excise, unemployment, FICA, and income taxes, customs, duties, and any and all other taxes on any item or service that is part of the Work, whether such taxes are normally included in the price of such item or service or are normally stated separately. Notwithstanding the foregoing, each party shall bear such state or local inventory, real property, personal property or fixtures taxes as may be properly assessed against it by applicable taxing authorities.

Article 5. Contractor's Representations and Warranties

In order to induce City to enter into this Agreement, Contractor makes the following representations and warranties:

5.1 Contractor has visited the Site and has examined thoroughly and understood the nature and extent of the Contract Documents, Work, Site, locality, actual conditions, as-built conditions, and all local conditions and federal, state and local laws and regulations that in any manner may affect cost, progress, performance or furnishing of Work or which relate to any aspect of the design and the means, methods, techniques, sequences or procedures of construction to be employed by Contractor and safety precautions and programs incident thereto.

5.2 Contractor has examined thoroughly and understood all reports of exploration and tests of subsurface conditions, as-built drawings, drawings, product specifications or reports, available for Bidding purposes, of physical conditions, including Underground Facilities, which are identified in Document 00320, Geotechnical Data and Existing Conditions, which may be apparent at the Site, or which may appear in the Drawings and accepts the determination set forth in these documents and Document 00700, General Conditions of the limited extent of the information contained in these documents and materials upon which the Contractor may be entitled to rely. Contractor agrees that except for the information so identified, Contractor does not and shall not rely on any other information contained in these documents, reports and drawings.

5.3 Contractor has conducted or obtained and has understood all such examinations, investigations, explorations, tests, reports and studies (in addition to or to supplement those referred to in Section 5.2 of this Document 00520) that pertain to the subsurface conditions, as-built conditions, Underground Facilities and all other physical conditions at or contiguous to the Site or otherwise that may affect the cost, progress, performance or furnishing of Work, as Contractor considers necessary for the performance or furnishing of Work at the Contract Sum, within the Contract Time and in accordance with the other terms and conditions of the Contract Documents, including specifically the provisions of Document 00700, General Conditions; and no additional examinations, investigations, explorations, tests, reports, studies or similar information or data are or will be required by Contractor for such purposes.

5.4 Contractor has correlated its knowledge and the results of all such observations, examinations, investigations, explorations, tests, reports and studies with the terms and conditions of the Contract Documents.

5.5 Contractor has given City prompt written notice of all conflicts, errors, ambiguities, or discrepancies that it has discovered in or among the Contract Documents and as-built drawings and actual conditions and the written resolution thereof through Addenda issued by City is acceptable to Contractor.

5.6 Contractor is duly organized, existing and in good standing under applicable state law, and is duly qualified to conduct business in the State of California.

5.7 Contractor has duly authorized the execution, delivery and performance of this Agreement, the other Contract Documents and the Work to be performed herein. The Contract Documents do not violate or create a default under any instrument, agreement, order or decree binding on Contractor.

Article 6. Contract Documents

6.1 Contract Documents, which comprise the entire agreement between the City and Contractor concerning the Work, consist of the following documents, including all changes, Addenda and Modifications thereto:

CONTRACT DOCUMENTS

Division 0 - GENERAL PROVISIONS.
Division 1 - GENERAL REQUIREMENTS.
Division 2 - TECHNICAL PROVISIONS.
Division 3 and above - SPECIAL PROVISIONS.
Plans

6.2 There are no Contract Documents other than those listed above in this Article 6. The information supplied under Document 00320, Geotechnical Data and Existing Conditions, is not part of the Contract Documents. The Contract Documents may only be amended, modified or supplemented as provided in Document 00700, General Conditions.

Article 7. Miscellaneous

7.1 Terms used in this Agreement are defined in Document 00700, General Conditions and Section 00050, References and Definitions, and will have the meaning indicated therein.

7.2 It is understood and agreed that in no instance is any person, signing this Agreement for or on behalf of City or acting as an employee, agent or representative of City, liable on this Agreement or any of the Contract Documents, or upon any warranty of authority, or otherwise, and it is further understood and agreed that liability of the City is limited and confined to such liability as authorized or imposed by the Contract Documents or applicable law.

7.3 Contractor shall not assign any portion of the Contract Documents, and may subcontract portions of the Contract Documents only in compliance with the Subcontractor Listing Law, California Public Contracting Code §4100 et seq.

7.4 The Contract Sum includes all allowances (if any).

7.5 In entering into a public works contract or a subcontract to supply goods, services or materials pursuant to a public works contract, Contractor or Subcontractor offers and agrees to assign to the awarding body all rights, title and interest in and to all causes of action it may have under Section 4 of the Clayton Act (15 U.S.C. §15) or under the Cartwright Act (Chapter 2 (commencing with Section 16700) of Part 2 of Division 7 of the Business and Professions Code), arising from purchases of goods, services or materials pursuant to the public works contract or the subcontract. This assignment shall be made and become effective at the time City tenders final payment to Contractor, without further acknowledgment by the parties.

7.6 Copies of the general prevailing rates of per diem wages for each craft, classification, or type of worker needed to execute the Contract, as determined by Director of the State of California Department of Industrial Relations, are deemed included in the Contract Documents, and are on file in the City Clerk's Office, and shall be made available to any interested party on request. Pursuant to Section 1861 of the Labor Code, Contractor represents that it is aware of the provisions of Section 3700 of the Labor Code which require every employer to be insured against liability for workers' compensation or to undertake self-insurance in accordance with the provisions of that Code, and Contractor shall comply with such provisions before commencing the performance of the Work of the Contract Documents.

7.7 Should any part, term or provision of this Agreement or any of the Contract Documents, or any document required herein or therein to be executed or delivered, be declared invalid, void or unenforceable, all remaining parts, terms and provisions shall remain in full force and effect and shall in no way be invalidated, impaired or affected thereby. If the provisions of any law causing such invalidity, illegality or unenforceability may be waived, they are hereby waived to the end that this Agreement and the Contract Documents may be deemed valid and binding agreements, enforceable in accordance with their terms to the greatest extent permitted by applicable law. In the event any provision not otherwise included in the Contract Documents is required to be included by any applicable law, that provision is deemed included herein by this reference (or, if such provision is required to be included in any particular portion of the Contract Documents, that provision is deemed included in that portion).

7.8 This Agreement and the Contract Documents shall be deemed to have been entered into in the County of Santa Clara, State of California, and governed in all respects by California law (excluding choice of law rules). The exclusive venue for all disputes or litigation hereunder shall be in Santa Clara County. Both parties hereby waive their rights under California Code of Civil Procedure Section 394 to file a motion to transfer any action or proceeding arising out of the Contract Documents to another venue. Contractor accepts the Claims Procedure in Document 00700, Article 12, established under the California Government Code, Title 1, Division 3.6, Part 3, Chapter 5.

IN WITNESS WHEREOF, the parties hereto have executed this Agreement the day first mentioned above.

CITY OF SANTA CLARA, CALIFORNIA,
a chartered California municipal corporation

Approved as to form:

RICHARD E. NOSKY, JR.
City Attorney

JULIO J. FUENTES
City Manager

1500 Warburton Avenue
Santa Clara, CA 95050
Telephone: 1+(408) 615-2210
Fax: 1+(408) 241-0347

Attest:

ROD DIRIDON, JR.
City Clerk

"City"

***[NAME OF BUSINESS/COMPANY],**
a _____ (Corp/Partnership/Trust, Etc)

By: _____
(Signature of Person executing the Agreement on behalf of Contractor)

_____
(Please Print or Type Name)

Title: _____

Local Address: _____
_____
_____

Telephone: (___)___-____
Fax: (___)___-____

"Contractor"

END OF DOCUMENT

DOCUMENT 00550

NOTICE TO PROCEED

Date: _____, 201__

Name
Company
Address
City, State Zip

Re: NOTICE TO PROCEED – NORTHSIDE TANKS SITE IMPROVEMENTS PROJECT
WA 30148

Dear _____:

In accordance with Paragraph 3 of Document 00700, General Conditions, this letter is your NOTICE TO PROCEED with the Work for the referenced Project.

Time will be charged on the Project beginning _____, 201__. Document 00520 provides _____ Days to achieve Substantial Completion and _____ Days to achieve Final Completion. The calculated date of Substantial Completion is _____, 201__ and the calculated date of Final Completion is _____, 201__. Should the Work not be completed on time, liquidated damages are to be charged at the rate of $_____ per Day up to Substantial Completion and $_____ per Day up to Final Completion.

The City is interested in having a good working relationship with you and delivering a successful Project. If you need any assistance, please call me at 1+(408) 615-3061.

Sincerely,

Christopher L. de Groot
Director of Water and Sewer Utilities

Shilpa B. Mehta, P.E.
Principal Engineer – Water and Sewer

CdG:SM:hs

END OF DOCUMENT

THIS PAGE

WAS INTENTIONALLY

LEFT BLANK

DOCUMENT 00610

CONSTRUCTION PERFORMANCE BOND

This Construction Performance Bond ("Bond"), dated _____, 201__, is issued in the amount of _____ Dollars, ($_____.___), (the "Penal Sum ") which is equal to one hundred percent of the Contract Price**,** and is entered into by and between the Contractor and the Surety to ensure the faithful performance of the Construction Contract defined below. This Bond consists of this page and the Bond Terms and Conditions, Paragraphs 1 through 13, attached and incorporated by this reference. The Contractor and Surety are the parties to this Bond, which has been issued for the benefit of the City of Santa Clara, California, a chartered California municipal corporation ("City") and in compliance with the terms of the Construction Contract. Any singular reference to the Contractor, Surety, City or other party shall be considered plural where applicable.

The City of Santa Clara Construction Contract to which this Bond applies is:

NORTHSIDE TANKS SITE IMPROVEMENTS PROJECT

City Contract Number: WA 30148

In the Amount of $ _____ (Referred to as the "Total Contract Price")

The Contractor and Surety each acknowledge and accept the terms and conditions of this Bond as evidenced by the following signatures of their representatives. The Contractor and Surety each specifically represent that the individual representatives who have signed below are duly authorized to execute this Bond on its behalf. It is the intent of the Parties that this Bond shall become operative on the date first set forth above.

CONTRACTOR AS PRINCIPAL:	**SURETY:**
Name: _____	Name: _____
Principal Place of Business:	Principal Place of Business:
Address: _____	Address: _____
City/State/Zip _____	City/State/Zip _____
Signature: _____	Signature: _____
Name: _____	Name: _____
Title: _____	Title: _____
	(Please Note: Surety signature must be notarized)
(Please Apply Corporate Seal Here)	(Please Apply Corporate Seal Here)

Approved as to Form:

_____ Date: _____, 201__
City Attorney

BOND TERMS AND CONDITIONS

1. Contractor and Surety, jointly and severally, bind themselves, their heirs, executors, administrators, successors and assigns to City for the complete and proper performance of the Construction Contract, which is incorporated herein by reference.

2. If Contractor completely and properly performs all of its obligations under the Construction Contract, Surety and Contractor shall have no obligation under this Bond.

3. If there is no City Default, Surety's obligation under this Bond shall arise after:

   3.1 City has declared a Contractor Default under the Construction Contract pursuant to the terms of the Construction Contract; and

   3.2 City has agreed to pay the Balance of the Contract Price:

      3.2.1 To Surety in accordance with the terms of this Bond and the Construction Contract; or

      3.2.2 To a contractor selected to perform the Construction Contract in accordance with the terms of this Bond and the Construction Contract.

4. When City has satisfied the conditions of paragraph 3, Surety shall promptly (within 30 days) and at Surety's expense elect to take one of the following actions:

   4.1 Arrange for Contractor, with consent of City, to perform and complete the Construction Contract (but City may withhold consent, in which case the Surety must elect an option described in paragraphs 4.2, 4.3 or 4.4, below); or

   4.2 Undertake to perform and complete the Construction Contract itself, through its agents or through independent contractors; provided, that Surety may not select Contractor as its agent or independent contractor without City's consent; or

   4.3 Undertake to perform and complete the Construction Contract by obtaining bids from qualified contractors acceptable to City for a contract for performance and completion of the Construction Contract, and, upon determination by City of the lowest responsible bidder, arrange for a contract to be prepared for execution by City and the contractor selected with City's concurrence, to be secured with performance and payment bonds executed by a qualified surety equivalent to the bonds issued on the Construction Contract; and, if Surety's obligations defined in paragraph 6, below, exceed the Balance of the Contract Price, then Surety shall pay to City the amount of such excess; or

   4.4 Waive its right to perform and complete, arrange for completion, or obtain a new contractor and with reasonable promptness under the circumstances, and, after investigation and consultation with City, determine in good faith its monetary obligation to City under paragraph 6, below, for the performance and completion of the Construction Contract and, as soon as practicable after the amount is determined, tender payment therefore to City with full explanation of the payment's calculation. If City accepts Surety's tender under this paragraph 4.4, City may still hold Surety liable for future damages then unknown or unliquidated resulting from the Contractor Default. If City disputes the amount of Surety's tender under this paragraph 4.4, City may exercise all remedies available to it at law to enforce Surety's liability under paragraph 6, below.

5. If Surety does not proceed as provided in paragraph 4, above, then Surety shall be deemed to be in default on this Bond ten days after receipt of an additional written notice from City to Surety demanding that Surety perform its obligations under this Bond. At all times City shall be entitled to enforce any remedy available to City at law or under the Construction Contract including, without limitation, and by way of example only, rights to perform work, protect work, mitigate damages, advance critical work to mitigate schedule delay, or coordinate work with other consultants or contractors.

6. Surety's monetary obligation under this Bond is limited by the Amount of this Bond identified herein as the Penal Sum. This monetary obligation shall augment the Balance of the Contract Price. Subject to these limits, Surety's obligations under this Bond are commensurate with the obligations of Contractor under the Construction Contract. Surety's obligations shall include, but are not limited to:

   6.1 The responsibilities of Contractor under the Construction Contract for completion of the Construction Contract and correction of defective work;

   6.2 The responsibilities of Contractor under the Construction Contract to pay liquidated damages, and for damages for which no liquidated damages are specified in the Construction Contract, actual damages caused by non-performance of the Construction Contract including, but not limited to, all valid and proper backcharges, offsets, payments, indemnities, or other damages;

   6.3 Additional legal, design professional and delay costs resulting from Contractor Default or resulting from the actions or failure to act of the Surety under paragraph 4, above (but excluding attorney's fees incurred to enforce this Bond).

7. No right of action shall accrue on this Bond to any person or entity other than City or its successors or assigns.

8. Surety hereby waives notice of any change, alteration or addition to the Construction Contract or to related subcontracts, purchase orders and other obligations, including changes of time. Surety consents to all terms of the Construction Contract, including provisions on changes to the Contract. No extension of time, change, alteration, modification, deletion, or addition to the Contract Documents, or of the work required thereunder, shall release or exonerate Surety on this Bond or in any way affect the obligations of Surety on this Bond.

9. Any proceeding, legal or equitable, under this Bond shall be instituted in any court of competent jurisdiction where a proceeding is pending between City and Contractor regarding the Construction Contract, or in the courts of the County of Santa Clara, or in a court of competent jurisdiction in the location in which the work is located. Communications from City to Surety under paragraph 3.1 of this Bond shall be deemed to include the necessary agreements under paragraph 3.2 of this Bond unless expressly stated otherwise.

10. All notices to Surety or Contractor shall be mailed or delivered (at the address set forth on the signature page of this Bond), and all notices to City shall be mailed or delivered as provided in Document 00520, Agreement. Actual receipt of notice by Surety, City or Contractor, however accomplished, shall be sufficient compliance as of the date received at the foregoing addresses.

11. Any provision in this Bond conflicting with any statutory or regulatory requirement shall be deemed deleted herefrom and provisions conforming to such statutory requirement shall be deemed incorporated herein.

12. Definitions.

12.1 Balance of the Contract Price: The total amount payable by City to Contractor pursuant to the terms of the Construction Contract after all proper adjustments have been made under the Construction Contract, for example, deductions for progress payments made, and increases/decreases for approved modifications to the Construction Contract.

12.2 Construction Contract: The agreement between City and Contractor identified on the signature page of this Bond, including all Contract Documents and changes thereto.

12.3 Contractor Default: Material failure of Contractor, which has neither been remedied nor waived, to perform or otherwise to comply with the terms of the Construction Contract including, but not limited to, “default” or any other condition allowing a termination for cause as provided in Document 00700, General Conditions.

12.4 City Default: Material failure of City, which has neither been remedied nor waived, to pay Contractor progress payments due under the Construction Contract or to perform other material terms of the Construction Contract, if such failure is the cause of the asserted Contractor Default and is sufficient to justify Contractor termination of the Construction Contract.

13. Surety shall submit following documents along with this Construction Performance Bond:

13.1 Verification that Surety is admitted to transact surety business the State of California; and

13.2 Copy of Surety’s Certificate of authority issued by the insurance Commissioner of the State of California along with a statement that said Certificate has not been surrendered, revoked, cancelled, annulled or suspended.

END OF DOCUMENT

DOCUMENT 00620

CONSTRUCTION LABOR AND MATERIAL PAYMENT BOND

This Construction Labor And Material Payment Bond ("Bond") dated _____,201__, is issued in the amount of _____ Dollars ($_____.___), (the "Penal Sum ") which is equal to one hundred percent of the Contract Price**,** and is entered into by and between the Contractor and the Surety to ensure the payment of claimants under the Construction Contract defined below. This Bond consists of this page and the Bond Terms and Conditions, Paragraphs 1 through 14, attached and incorporated by this reference. The Contractor and Surety are the parties to this Bond, which has been issued for the benefit of the City of Santa Clara, California, a chartered California municipal corporation ("City") in compliance with the terms of the Construction Contract. Any singular reference to the Contractor, Surety, City or other party shall be considered plural where applicable.

The City of Santa Clara Construction Contract to which this Bond applies is:

NORTHSIDE TANKS SITE IMPROVEMENTS PROJECT

City Contract Number: WA 30148

In the Amount of $ _____ (Referred to as the "Contract Price")

The Contractor and Surety each acknowledge and accept the terms and conditions of this Bond as evidenced by the following signatures of their representatives. The Contractor and Surety each specifically represent that the individual representatives who have signed below are duly authorized to execute this Bond on its behalf. It is the intent of the Parties that this Bond shall become operative on the date first set forth above.

CONTRACTOR AS PRINCIPAL:	**SURETY:**
Name: _____	Name: _____
Principal Place of Business:	Principal Place of Business:
Address: _____	Address: _____
City/State/Zip _____	City/State/Zip _____
Signature: _____	Signature: _____
Name: _____	Name: _____
Title: _____	Title: _____
	(Please Note: Surety signature must be notarized)
(Please Apply Corporate Seal Here)	(Please Apply Corporate Seal Here)

Approved as to Form:

_____ Date: _____
City Attorney

BOND TERMS AND CONDITIONS

1. Contractor and Surety, jointly and severally, bind themselves, their heirs, executors, administrators, successors and assigns to City and to Claimants, to pay for labor, materials and equipment furnished for use in the performance of the Construction Contract, which is incorporated herein by reference.

2. With respect to City, this obligation shall be null and void if Contractor:

   2.1 Promptly makes payment, directly or indirectly, for all sums due Claimants; and

   2.2 Defends, indemnifies and holds harmless City from all claims, demands, liens or suits by any person or entity who furnished labor, materials or equipment for use in the performance of the Construction Contact, provided City has promptly notified Contractor and Surety (at the address set forth on the signature page of this Bond) of any claims, demands, liens or suits and tendered defense of such claims, demands, liens or suits to Contractor and Surety, and provided there is no City Default.

3. With respect to Claimants, this obligation shall be null and void if Contractor promptly makes payment, directly or indirectly through its Subcontractors, for all sums due Claimants. If Contractor or its Subcontractors, however, fail to pay any of the persons named in Section 3181 of the California Civil Code, or amounts due under the Unemployment Insurance Code with respect to Work or labor performed under the Contract, or for any amounts required to be deducted, withheld, and paid over to the Employment Development Department from the wages of employees of Contractor or Subcontractors pursuant to Section 13020 of the Unemployment Insurance Code, with respect to such Work and labor, then Surety shall pay for the same, and also, in case suit is brought upon this Bond, a reasonable attorney's fee, to be fixed by the court.

4. Consistent with the California Mechanic's Lien Law, Civil Code §3082, *et seq*., Surety shall have no obligation to Claimants under this Bond unless the Claimant has satisfied all applicable notice requirements.

5. Surety's total obligation shall not exceed the amount of this Bond, and the amount of this Bond shall be credited for any payments made in good faith by Surety under this Bond.

6. Amounts due Contractor under the Construction Contract shall be applied first to satisfy claims, if any, under any Construction Performance Bond and second, to satisfy obligations of Contractor and Surety under this Bond.

7. City shall not be liable for payment of any costs, expenses, or attorney's fees of any Claimant under this Bond, and shall have under this Bond no obligations to make payments to, give notices on behalf of, or otherwise have obligations to Claimants under this Bond.

8. Surety hereby waives notice of any change, including changes of time, to the Construction Contract or to related subcontracts, purchase orders and other obligations. Surety further hereby stipulates and agrees that no change, extension of time, alteration or addition to the terms of the Construction Contract, or to the Work to be performed thereunder, or materials or equipment to be furnished thereunder or the Specifications accompanying the same, shall in any way affect its obligations under this Bond, and it does hereby waive any requirement of notice or any such change, extension of time, alteration or addition to the terms of the Construction Contract or to the Work or to the Specifications or any other changes.

9. Suit against Surety on this Bond may be brought by any Claimant, or its assigns, at any time after the Claimant has furnished the last of the labor or materials, or both, but, per Civil Code §3249, must be commenced before the expiration of six months after the period in which stop notices may be filed as provided in Civil Code §3184.

10. All notices to Surety or Contractor shall be mailed or delivered (at the address set forth on the signature page of this Bond), and all notices to City shall be mailed or delivered as provided in Document 00520 (Agreement). Actual receipt of notice by Surety, City or Contractor, however accomplished, shall be sufficient compliance as of the date received at the foregoing addresses.

11. This Bond has been furnished to comply with the California Mechanic's Lien Law including, but not limited to, Civil Code §§3247, 3248, *et seq*. Any provision in this Bond conflicting with said statutory requirements shall be deemed deleted herefrom and provisions conforming to such statutory or other legal requirements shall be deemed incorporated herein. The intent is that this Bond shall be construed as a statutory bond and not as a common law bond.

12. Upon request by any person or entity appearing to be a potential beneficiary of this Bond, Contractor shall promptly furnish a copy of this Bond or shall permit a copy to be made.

13. Definitions.

    13.1 Claimant: An individual or entity having a direct contract with Contractor or with a Subcontractor of Contractor to furnish labor, materials or equipment for use in the performance of the Contract, as further defined in California Civil Code §3181. The intent of this Bond shall be to include without limitation in the terms "labor, materials or equipment" that part of water, gas, power, light, heat, oil, gasoline, telephone service or rental equipment used in the Construction Contract, architectural and engineering services required for performance of the Work of Contractor and Contractor's Subcontractors, and all other items for which a stop notice might be asserted. The term Claimant shall also include the Unemployment Development Department as referred to in Civil Code §3248(b).

    13.2 Construction Contract: The agreement between City and Contractor identified on the signature page of this Bond, including all Contract Documents and changes thereto.

    13.3 City Default: Material failure of City, which has neither been remedied nor waived, to pay the Contractor as required by the Construction Contract, provided that failure is the cause of the failure of Contractor to pay the Claimants and is sufficient to justify termination of the Construction Contract.

14. Surety shall submit following documents along with this Construction Labor and Material Payment Bond:

    14.1 Verification that Surety is admitted to transact surety business the State of California; and

    14.2 Copy of Surety's Certificate of authority issued by the insurance Commissioner of the State of California along with a statement that said Certificate has not been surrendered, revoked, cancelled, annulled or suspended.

END OF DOCUMENT

THIS PAGE

WAS INTENTIONALLY

LEFT BLANK

DOCUMENT 00630

GUARANTY

TO THE CITY OF SANTA CLARA, a chartered Municipal Corporation of the State of California ("City"), for construction of:

NORTHSIDE TANKS SITE IMPROVEMENTS PROJECT

SANTA CLARA, CALIFORNIA

1. The undersigned guarantees all construction performed on this Project and also guarantees all material and equipment incorporated therein.

2. Contractor hereby grants to City for a period of one (1) year following the date of Final Completion, or such longer period specified in the Contract Documents, its unconditional warranty of the quality and adequacy of all of the Work including, without limitation, all labor, materials and equipment provided by Contractor and its Subcontractors of all tiers in connection with the Work.

3. Neither final payment nor use or occupancy of the Work performed by the Contractor shall constitute an acceptance of Work not done in accordance with this Guaranty or relieve Contractor of liability in respect to any express warranties or responsibilities for faulty materials or workmanship. Contractor shall remedy any defects in the Work and pay for any damage resulting therefrom, which shall appear within one (1) year, or longer if specified in the Contract Documents, from the date of Final Completion.

4. If within one (1) year after the date of Final Completion, or such longer period of time as may be prescribed by laws or regulations, or by the terms of Contract Documents, any Work is found to be defective, Contractor shall promptly, without cost to City and in accordance with City's written instructions, correct such defective Work. Contractor shall remove any defective Work rejected by City and replace it with Work that is not defective, and satisfactorily correct or remove and replace any damage to other Work or the work of others resulting therefrom. If Contractor fails to promptly comply with the terms of such instructions, or in an emergency where delay would cause serious risk of loss or damage, City may have the defective Work corrected or the rejected Work removed and replaced. Contractor shall pay for all claims, costs, losses and damages caused by or resulting from such removal and replacement. Where Contractor fails to correct defective Work, or defects are discovered outside the correction period, City shall have all rights and remedies granted by law.

5. Inspection of the Work shall not relieve Contractor of any of its obligations under the Contract Documents. Even though equipment, materials, or Work required to be provided under the Contract Documents have been inspected, accepted, and estimated for payment, Contractor shall, at its own expense, replace or repair any such equipment, material, or Work found to be defective or otherwise not to comply with the requirements of the Contract Documents up to the end of the guaranty period.

6. All abbreviations and definitions of terms used in this Agreement shall have the meanings set forth in the Contract Documents, including, without means of limitation, Section 00050, References and Definitions.

7. The foregoing Guaranty is in addition to any other warranties of Contractor contained in the Contract Documents, and not in lieu of, any and all other liability imposed on Contractor under the Contract Documents and at law with respect to Contractor's duties, obligations, and performance under the Contract Documents. In the event of any conflict or inconsistency between the terms of this Guaranty and any warranty or obligation of the Contractor under the Contract Documents or at law, such inconsistency or conflict shall be resolved in favor of the higher level of obligation of the Contractor.

***[NAME OF BUSINESS/COMPANY],**
a _____ (Corp/Partnership/Trust, Etc)

By: _____ _____
(Signature of Person authorized to sign on behalf of Contractor) Date

_____
(Please Print or Type Name)

_____
Title

Local Address: _____

_____

_____

Telephone: (_____) _____-_____

Fax: (_____) _____-_____

END OF DOCUMENT

DOCUMENT 00650

AGREEMENT AND RELEASE OF ANY AND ALL CLAIMS

THIS AGREEMENT AND RELEASE OF ANY AND ALL CLAIMS ("Agreement and Release"), is made and entered into on this _____ day of _____, 201__, (the "Effective Date"), by and between the City of Santa Clara, California, a chartered California municipal corporation, whose primary place of business is located at 1500 Warburton Avenue, Santa Clara, CA 95050 ("City"), and *[insert Consultant's name], a *[choose one: corporation/partnership/individual], whose primary place of business is located at *[insert Consultant's address] ("Contractor"). City and Contractor may be referred to in this Agreement and Release individually as a "Party" or collectively as the "Parties" or the "Parties to this Agreement and Release."

RECITALS

A. City and Contractor entered into Contract Number WA 30148 (the "Contract").

B. The Work under the Contract has been completed.

Now, therefore, it is mutually agreed between City and Contractor as follows:

AGREEMENT

1. Contractor will not be assessed liquidated damages except as detailed below:

Original Contract Sum	$ _____
Modified Contract Sum	$ _____
Payment to Date	$ _____
Liquidated Damages	$ _____
Payment Due Contractor	$ _____

2. Subject to the provisions of this Agreement and Release, City will forthwith pay to Contractor the sum of $_____ Dollars and _____ Cents ($_____) under the Contract, less any amounts withheld under the Contract or represented by any Notice to Withhold Funds on file with City as of the date of such payment.

3. Contractor acknowledges and hereby agrees that there are no unresolved or outstanding claims in dispute against City arising from the Contract, except for the claims described in paragraph 4 of this Document 00650. It is the intention of the parties in executing this Agreement and Release that this Agreement and Release shall be effective as a full, final and general release of all claims, demands, actions, causes of action, obligations, costs, expenses, damages, losses and liabilities of Contractor against City, and all of its agents, employees, consultants (including without limitation Consulting Engineer), inspectors, representatives, assignees and transferees except for the Disputed Claims set forth in paragraph 4 of this Document 00650. Nothing in this Agreement and Release shall limit or modify Contractor's continuing obligations described in paragraph 6 of this Document 00650.

4. The following claims are disputed (hereinafter, the "Disputed Claims") and are specifically excluded from the operation of this Agreement and Release:

Claim No.	Date Submitted	Description of Claim	Amount of Claim

[Insert information, including attachment if necessary]

5. Consistent with California Public Contract Code Section 7100, Contractor hereby agrees that, in consideration of the payment set forth in paragraph 2 of this Document 00650, Contractor hereby releases and forever discharges City, and all of its agents, employees, consultants, inspectors, assignees and transferees from any and all liability, claims, demands, actions or causes of action of whatever kind or nature arising out of or in any way concerned with the Work under the Contract.

6. Guarantees and warranties for the Work, and any other continuing obligation of Contractor, shall remain in full force and effect as specified in the Contract Documents.

7. Contractor shall immediately defend, indemnify and hold harmless the City and all City Representatives, Engineers, agents, employees, consultants, inspectors, assignees and transferees from any and all claims, demands, actions, causes of action, obligations, costs, expenses, damages, losses and liabilities that may be asserted against them by any of Contractor's suppliers and/or Subcontractors of any tier and/or any suppliers to them for any and all labor, materials, supplies and equipment used, or contemplated to be used in the performance of the Contract, except for the Disputed Claims set forth in paragraph 4 of this Document 00650.

8. Contractor hereby waives the provisions of California Civil Code Section 1542, which provides as follows:

> A general release does not extend to claims which the creditor does not know or suspect to exist in his favor at the time of executing the release, which if known by him, must have materially affected his settlement with the debtor.

9. The provisions of this Agreement and Release are contractual in nature and not mere recitals and shall be considered independent and severable, and if any such provision or any part thereof shall be at any time held invalid in whole or in part under any federal, state, county, municipal or other law, ruling, or regulation, then such provision, or part thereof shall remain in force and effect only to the extent permitted by law, and the remaining provisions of this Agreement and Release shall also remain in full force and effect, and shall be enforceable.

10. Contractor represents and warrants that it is the true and lawful owner of all claims and other matters released pursuant to this Agreement and Release, and that it has full right, title and authority to enter into this instrument. Each party represents and warrants that it has been represented by counsel of its own choosing in connection with this Agreement and Release.

11. All rights of City shall survive completion of the Work or termination of the Contract, and execution of this Agreement and Release.

*** * * CAUTION: THIS IS A RELEASE - READ BEFORE EXECUTING * * ***

The Parties acknowledge and accept the terms and conditions of this Agreement as evidenced by the following signatures of their duly authorized representatives. It is the intent of the Parties that this Agreement shall become operative on the Effective Date.

"Contractor"

By: _____

Name: _____

Its: _____

By: _____

Name: _____

Its: _____

Local Address: _____
_____

Telephone: (____) ____ – _____
Fax: (____) ____ – _____

"City"

CITY OF SANTA CLARA, CALIFORNIA,
a chartered California municipal corporation

Approved as to form:

_____
RICHARD E. NOSKY, JR.
City Attorney

_____
JULIO J. FUENTES
City Manager

1500 Warburton Avenue
Santa Clara, CA 95050
Telephone: 1+(408) 615-2210
Fax: 1+(408) 241-0347

Attest:

_____
ROD DIRIDON, JR.
City Clerk

Date: _____, 201__

END OF DOCUMENT

THIS PAGE

WAS INTENTIONALLY

LEFT BLANK

DOCUMENT 00654

WORKERS' COMPENSATION INSURANCE STATEMENT

TO: The City of Santa Clara, California, 1500 Warburton Avenue, Santa Clara, CA 95050

Contractor hereby states the following:

1. California Labor Code Section 1861
Certification by Contractor regarding Workers' Compensation Insurance Requirements

I am aware of the provisions of Section 3700 of the Labor Code of the State of California, which require every employer to be insured against liability for workers' compensation or to undertake self-insurance in accordance with the provisions of that Code, and I will comply with such provisions before commencing the performance of the Work under this Contract.

2. California Labor Code Section 3800
Declaration verifying Workers' Compensation Insurance Coverage

In the event the Contractor is determined to be the lowest responsible and responsive bidder and is awarded this Contract by the City, Contractor shall verify under penalty of perjury, and provide evidence or confirmation of the existence and status of its Workers' Compensation Insurance Policy. Such information shall be provided by the Contractor in a form acceptable to the City Attorney or the City's insurance compliance representatives within the time period specified in Document 00510, Notice of Award, and shall include, but not be limited to, evidence or confirmation of the following:

a. The Contractor has purchased and is maintaining a valid Workers' Compensation Insurance Policy in a form approved by the California Insurance Commissioner, and that said Workers' Compensation Insurance Policy is in full force and effect on behalf of the Contractor;

b. The full deposit premium on the policy has been paid;

c. The coverage afforded to the Contractor under its Workers' Compensation Insurance Policy is in accordance with the Workers' Compensation Law of California and complies with California statutory limits;

d. Verification of the expiration date of the Contractor's Workers' Compensation Insurance Policy;

e. Advance written notice shall be given to the City in the event of cancellation of the policy. The undersigned shall provide such notice to the City of Santa Clara, within the time period specified in Document 00820, Insurance Requirements; and

///

///

///

///

///

f. The policy includes a Waiver of Subrogation in favor of the City of Santa Clara, its City Council, commissions, officers, employees, volunteers and agents.

Contractor: _____
Contractor's Signature
Note: Signature of the Contractor must be notarized

By: _____
Print/Type Name of Signatory

Its: _____
Title of Signatory

Signed this _____ day of _____, 201__.

END OF DOCUMENT

DOCUMENT 00660

SUBSTITUTION REQUEST

To: The City of Santa Clara,
A chartered Municipal Corporation of the State of California ("City")

Project: **NORTHSIDE TANKS SITE IMPROVEMENTS PROJECT (WA 30148)**

Bidder/Contractor:_____
[note applicable]

Subcontractor/Supplier:_____

Drawing Sheet Reference/Detail No:_____

The undersigned Bidder submits for consideration the following item(s) instead of the specified item for the above project:

Section	Paragraph	Specified Item
_____	_____	_____
_____	_____	_____

Proposed Substitution:_____

_____

The undersigned encloses the information required herein. If this Document 00660 is being submitted by a Bidder wishing to use "or equal" item(s) as provided in Document 00200, Instructions to Bidders, the undersigned Bidder must also enclose the technical information (other than cost) otherwise required for a post-Award of Contract Request for Substitution ("RFS") under Section 01600, Product Requirements. However, If this Document 00660 is being submitted under provisions of Contract Documents after Award of Contract, the undersigned Contractor must include all information required under Section 1600, Product Requirements.

The undersigned has (a) attached manufacturer's literature, including complete technical data and laboratory test results, if applicable, (b) attached an explanation of why proposed substitution is a true equivalent to specified item, (c) included complete information on changes to Drawings and Specifications that the proposed substitution will require for its proper installation, and (d) filled in the blanks below:

A. Does the substitution affect dimensions shown on Drawings?

_____

B. Are the manufacturer's guarantees and warranties on the proposed substitution items identical to those on the specified items? If there are differences, please specify each and every difference in detail.

_____

C. What effect does the substitution have on other contractors, trades, or suppliers?

_____

D. What are the differences between the proposed substitution and the specified item? If proposed substitution has a color or pattern, provide a color board showing proposed substitution in relation to the other adjacent colors and patterns.

_____

E. Will granting the requested substitution cause any schedule delay? (If yes, please explain)

_____

The undersigned Bidder certifies that the function, appearance, and quality of the proposed substitution are equivalent or superior to those of the specified item.

Submitted by:

_____
Bidder/Contractor
[note applicable]

_____
Signature

_____
Name

_____
Address

_____
City/State/Zip

Telephone: _____

Date: _____, 201___

For Use by City or Design Consultant:

____ Accepted ____ Accepted as Noted

____ Not Accepted ____ Received Too Late

By: _____

Date: _____

Remarks: _____

_____

_____

_____

END OF DOCUMENT

DOCUMENT 00670

ESCROW BID DOCUMENTS

1. Requirements for Escrow Bid Documents.

   a. Within the time period established in Document 00510, Notice of Award, Contractor shall submit to City a set of Escrow Bid Documents as defined in paragraph 2, below. Escrow Bid Documents will be used only in the manner and for the purposes described in this Document 00670.

   b. The submission of the Escrow Bid Documents, as with the bonds and insurance documents required under Document 00200, Instructions to Bidders, is considered an essential part of the Contract award. Should Contractor fail to make the submission within the allowed time specified, Contractor may be deemed to have failed to enter into the Contract, Contractor shall forfeit the amount of its Bid security accompanying Contractor's Bid, and City may award the Contract to the next lowest responsive responsible Bidder.

   c. NO PAYMENTS WILL BE MADE, NOR WILL CITY ACCEPT CHANGE ORDER REQUESTS UNTIL THE ABOVE REQUIRED INFORMATION IS SUBMITTED AND APPROVED. ALTERNATIVELY, CITY MAY DECLARE THE BID NON-RESPONSIVE.

   d. Contractor shall submit the Escrow Bid Documents, in person by an authorized representative of the Contractor, to:

      City of Santa Clara
      Office of the City Clerk
      1500 Warburton Avenue
      Santa Clara, CA 95050

2. Scope of Escrow Bid Documents.

   a. Within the time period established in Document 00510, Notice of Award, Contractor shall submit one copy of all documentary information received or generated by Contractor in preparation of Bid prices for the Contract Documents, as specified in paragraphs 5 and 6, below. This material is referred to in this Document 00670 as the "Escrow Bid Documents". Contractor's Escrow Bid Documents will be held in escrow as provided in this Document 00670.

   b. Contractor represents and agrees, as a condition of award of the Contract, that the Escrow Bid Documents constitute all written information used in the preparation of its Bid, and that no other written bid preparation information shall be considered in resolving disputes or claims or may be considered in legal proceedings. Contractor also agrees that nothing in the Escrow Bid Documents shall change or modify the terms or conditions of the Contract Documents. Contractor is advised that the Escrow Bid Documents will only be used as a guide in the resolution of disputes and claims.

3. Ownership of Escrow Bid Documents.

   a. The Escrow Bid Documents are, and shall always remain, the property of Contractor, subject to joint review by City and Contractor, as provided in this Document 00670.

b. City stipulates and expressly acknowledges that the Escrow Bid Documents constitute trade secrets. This acknowledgement is based on City's express understanding that the information contained in the Escrow Bid Documents is not known outside Contractor's business, is known only to a limited extent and only by a limited number of Contractor's employees, is safeguarded while in Contractor's possession, is extremely valuable to Contractor, and could be extremely valuable to Contractor's competitors by virtue of it reflecting Contractor's contemplated construction techniques. City further acknowledges that the Escrow Bid Documents and the information contained in them are made available to City only because such action is an express pre-requisite to award of the Contract. City agrees to safeguard the Escrow Bid Documents, and all information contained in them, against disclosure to the fullest extent permitted by law, consistent with paragraph 4, below.

4. Escrow Bid Documents may be used in the determination of price adjustments and change orders and in the settlement of disputes and claims. If used in legal proceedings, Escrow Bid Documents shall be subject to an appropriate protective order limiting their disclosure.

5. Format and Contents of Escrow Bid Documents.

a. Contractor may submit Escrow Bid Documents in their usual cost-estimating format; a standard format is not required. Contractor shall prepare and submit the Escrow Bid Documents in English.

b. City requires Contractor to itemize clearly in the Escrow Bid Documents the estimated costs of performing the work of each Bid item contained in Contractor's Bid. Contractor shall separate Bid items into sub-items as required to present a detailed cost estimate and allow a detailed cost review. The Escrow Bid Documents shall include all subcontractor bids or quotes, supplier bids or quotes, quantity take-offs, crews, equipment, calculations of rates of production and progress, copies of quotes from Subcontractors and suppliers, and memoranda, narratives, add/deduct sheets, and all other information used by Contractor to arrive at the prices contained in the Bid. Escrow Bid Documents shall include costs of scheduled maintenance, depreciation, fleet rental expense discounts and incentives, and similar cost adjustments if used by Contractor to calculate its Bid prices. Estimated costs shall be broken down into Contractor's usual estimate categories such as direct labor, repair labor, equipment ownership and operation, expendable materials, permanent materials and subcontract costs as appropriate. Plant and equipment and indirect costs should be detailed in Contractor's usual format. Contractor shall identify its allocation of indirect costs, contingencies, markup and other items to each Bid item.

c. Contractor shall identify all costs. For bid items amounting to less than Ten Thousand Dollars ($10,000), Contractor may estimate costs without a detailed cost estimate, provided that Contractor includes applicable labor, equipment, materials and subcontracts, and allocates applicable indirect costs, contingencies and markup.

d. Bid documents provided by City should not be included in the Escrow Bid Documents unless needed to comply with these requirements.

///

///

///

6. Submittal of Escrow Bid Documents.

   a. Contractor shall submit the Escrow Bid Documents within the time period established in Document 00510, Notice of Award. The container shall be clearly marked on the outside with Contractor's name, date of submittal, project name and the words "Escrow Bid Documents - Open only in the presence of Authorized Representatives of both City and Contractor". City will review the Escrow Bid Documents for initial compliance. City has three (3) days after receipt of Bidder's Escrow Bid Documents to demand additional information.

   b. By submitting Escrow Bid Documents, Contractor represents that the material in the Escrow Bid Documents constitutes all the documentary information used in preparation of the Bid and that Contractor has personally examined the contents of the Escrow Bid Documents container and has found that the documents in the container are complete. Contractor agrees that it will not introduce or rely on any other documents to prove how it prepared its Bid.

   c. If Contractor's proposal is based upon subcontracting any part of the Work, each Subcontractor whose total subcontract price exceeds five percent (5%) of the total contract price proposed by Contractor, shall provide separate Escrow Documents to be included with those of Contractor. Such documents shall be opened and examined in the same manner and at the same time as the examination described above for Contractor.

   d. If Contractor wishes to subcontract any portion of the Work after award, City retains the right to require Contractor to submit Escrow Documents for the subcontractor before approval of the subcontract.

7. Storage, Examination, and Final Disposition of Escrow Bid Documents.

   a. The Escrow Bid Documents will be placed in escrow until Final Completion of Work on the Project, in a mutually agreeable institution. Contractor shall pay the cost of storage for the Escrow Bid Documents until that time. The storage facilities shall be the appropriate size for all the Escrow Bid Documents and located conveniently to both City's and, to the extent reasonably possible, Contractor's offices, but in no event outside Santa Clara County.

   b. Both City and Contractor shall examine the Escrow Bid Documents, at any time deemed necessary by either City or Contractor, to assist in the negotiation of price adjustments and change orders or the settlement of disputes and claims. Examination of the Escrow Bid Documents is subject to the following conditions:

      i. As trade secrets, the Escrow Bid Documents are proprietary and confidential under section 3.b. above.

      ii. City and Contractor (and any Subcontractor, to the extent Escrow Bid Documents are required by a Subcontractor) shall each designate in writing to the other party and seven (7) Days prior to any examination, representatives who are authorized to examine the Escrow Bid Documents. Except as otherwise provided in a court order, no other person shall have access to the Escrow Documents.

///

///

iii. Except as otherwise provided in a court order, access to the documents may take place only in the presence of duly designated representatives of both City and Contractor. If Contractor fails to designate a representative or appear for joint examination on seven (7) Days notice, then City representative may examine the Escrow Bid Documents upon an additional three (3) Days notice.

c. Following Final Completion of Work on the Project and achievement of final settlement, City shall direct the escrow agent holding the Escrow Bid Documents in writing to return those documents to Contractor.

END OF DOCUMENT

DOCUMENT 00680

ESCROW AGREEMENT FOR SECURITY DEPOSITS IN LIEU OF RETENTION P.C.C. §22300

THIS ESCROW AGREEMENT ("Escrow Agreement") is made and entered into on this _____ day of _____, 201__, by and between the CITY OF SANTA CLARA, a chartered Municipal Corporation of the State of California (hereinafter "City"), whose address is 1500 Warburton Avenue, Santa Clara, California 95050; _____ ("Contractor"), whose place of business is located at _____; and **[City, as escrow agent …OR… [_____]**, a state or federally chartered bank in the State of California, whose place of business is located at _____] ("Escrow Agent").

For the consideration hereinafter set forth, City, Contractor and Escrow Agent agree as follows:

1. Pursuant to Section 22300 of Public Contract Code of the State of California, Contractor has the option to deposit securities with Escrow Agent as a substitute for retention earnings required to be withheld by City pursuant to Contract Number WA 30148 entered into between City and Contractor for NORTHSIDE TANKS SITE IMPROVEMENTS PROJECT in the amount of **[_____]** dated **[_____, 201__]** (the "Contract"). Alternatively, on written request of Contractor, City shall make payments of the retention earnings directly to Escrow Agent. When Contractor deposits the securities as a substitute for Contract earnings, Escrow Agent shall notify City within ten Days of the deposit. The market value of the securities at the time of substitution shall be at least equal to the cash amount then required to be withheld as retention under terms of Contract between City and Contractor. Securities shall be held in name of _____, and shall designate Contractor as the beneficial owner.

2. City shall make progress payments to Contractor for those funds which otherwise would be withheld from progress payments pursuant to Contract provisions, provided that Escrow Agent holds securities in form and amount specified in paragraph 1 of this Document 00680.

3. When City makes payment(s) of retention earned directly to Escrow Agent, Escrow Agent shall hold said payment(s) for the benefit of Contractor until the time that the escrow created under this Escrow Agreement is terminated. Contractor may direct the investment of the payments into securities. All terms and conditions of this Escrow Agreement and the rights and responsibilities of the parties shall be equally applicable and binding when City pays Escrow Agent directly.

4. Contractor shall be responsible for paying all fees for the expenses incurred by Escrow Agent in administering the Escrow Account, and all expenses of City. Such expenses and payment terms shall be determined by City, Contractor, and Escrow Agent.

5. Interest earned on securities or money market accounts held in escrow and all interest earned on that interest shall be for sole account of Contractor and shall be subject to withdrawal by Contractor at any time and from time to time without notice to City.

6. Contractor shall have the right to withdraw all or any part of the principal in the Escrow Account only by written notice to Escrow Agent accompanied by written authorization from City to Escrow Agent that City consents to withdrawal of amount sought to be withdrawn by Contractor.

7. City shall have the right to draw upon the securities in event of default by Contractor. Upon seven Days written notice to Escrow Agent from City of the default, Escrow Agent shall immediately convert the securities to cash and shall distribute the cash as instructed by City.

8. Upon receipt of written notification from City certifying that the Contract is final and complete, and that Contractor has complied with all requirements and procedures applicable to the Contract, Escrow Agent shall release to Contractor all securities and interest on deposit less escrow fees and charges of the Escrow Account. The escrow shall be closed immediately upon disbursement of all moneys and securities on deposit and payments of fees and charges.

9. Escrow Agent shall rely on written notifications from City and Contractor pursuant to paragraphs 5 through 8, inclusive, of this Document 00680 and City and Contractor shall hold Escrow Agent harmless from Escrow Agent's release and disbursement of securities and interest as set forth.

10. Names of persons who are authorized to give written notice or to receive written notice on behalf of City and on behalf of Contractor in connection with the foregoing, and exemplars of their respective are as follows:

ON BEHALF OF CITY:

_____
Title

_____
Name

_____
Signature

_____
Address

_____
City/State/Zip

ON BEHALF OF CONTRACTOR:

_____
Title

_____
Name

_____
Signature

_____
Address

_____
City/State/Zip

ON BEHALF OF ESCROW AGENT:

_____
Title

_____
Name

_____
Signature

_____
Address

_____
City/State/Zip

At the time the Escrow Account is opened, City and Contractor shall deliver to Escrow Agent a fully executed counterpart of this Document 00680.

IN WITNESS WHEREOF, the parties have executed this Escrow Agreement by their proper officers on the date first set forth above.

CITY:	CONTRACTOR:
_____	_____
_____ Title	_____ Title
_____ Name	_____ Name
_____ Signature	_____ Signature

ESCROW AGENT:

_____

_____
Title

_____
Name

_____
Signature

REVIEWED AS TO FORM:

_____
City Attorney
_____, 201__
Date

END OF DOCUMENT

THIS PAGE

WAS INTENTIONALLY

LEFT BLANK

DOCUMENT 00690

PUBLIC WORKS CONTRACT CHANGE ORDER (Sample)

PUBLIC WORKS CONTRACT CHANGE ORDER NO.

(Per City of Santa Clara Public Works Agreement)

This Change Order is issued after the Effective Date of the Agreement and modifies the terms of the Agreement. It is signed by Contractor, Engineer and Owner and authorizes the addition(s), deletion(s) or revision(s) in the Work described in the Agreement and/or provides for an adjustment in the Contract Price and/or the Contract Times included in the Agreement.

PROJECT NAME: **Northside Tanks Site Improvements Project**
CITY CONTRACT NO. **WA 30148**

OWNER: **CITY OF SANTA CLARA, CALIFORNIA**
ENGINEER:
CONTRACTOR:

Contractor agrees to make the following changes in the Contract Work and/or Contract Times:

Description of Change(s) to be Made:

CHANGE IN CONTRACT PRICE:	**CHANGE IN CONTRACT TIMES:**
Net Change This Change Order**:**	Net Change in Contract Time Per This Change Order:
$	

The Parties to this negotiated Contract modification ("Change Order") acknowledge and agree that this Change Order amends the Contract between the City and Contractor and changes the Contract Documents to adjust the Contract Price, Contract Time, or both. A significant element of the consideration between the Parties which formed the basis for this Change Order is that it includes all of the costs related to the changes in the Scope of Work to be performed by the Contractor. As an integral part of the consideration for this Change Order, any Work performed or to be performed as a result of this Change Order and any direct or indirect costs related to such Work (including, but not limited to, any and all home office overhead, special overhead, delay costs, costs incurred due to lost efficiency or contract delays of any kind) have been included in the Description of Changes to be made, above. The Parties agree that all other terms and conditions included in the Contract Documents and all previous Change Orders which have not been addressed in this Change Order shall remain unchanged and continue in full force and effect. By signing below, Contractor affirms under penalty of perjury under the laws of the State of California that this Change Order is a true and correct claim for necessary additional work, and is not a false claim under Government Code § 12650 et seq.

ENGINEER
Recommended:

By: _____
Engineer
(Authorized Signature)

Date: _____

DEPARTMENT HEAD
Recommended:

By: _____

Date: _____

CONTRACTOR
Accepted and Agreed:

By: _____
Contractor
(Authorized Signature)

Date: _____

CITY OF SANTA CLARA
Approved:

By: _____
City Manager

Attest: _____
City Clerk

Approved as to Form:

_____
City Attorney

Date: _____
The Effective Date of this Change Order

S:\Attorney\AGREEMENTS\Change Orders\Change Order Template PW.doc [rev. 03/17/11]

END OF DOCUMENT

THIS PAGE

WAS INTENTIONALLY

LEFT BLANK

DOCUMENT 00700

GENERAL CONDITIONS

TABLE OF CONTENTS

1. GENERAL 1
1.1. Documents 1
1.2. Exercise of Contract Responsibilities 1
1.3. Defined Terms 1

2. BIDDING 1
2.1. Investigation Prior To Bidding 1
2.2. Subcontractors 2

3. CONTRACT AWARD AND COMMENCEMENT OF THE WORK 3
3.1. Award of Contract 3
3.2. Commencement of Work 3

4. BONDS AND INSURANCE 3
4.1. Bonds 3
4.2. Insurance 4

5. DRAWINGS/PLANS AND SPECIFICATIONS 4
5.1. Intent 4
5.2. Drawing Details 5
5.3. Interpretation of Drawings/Plans and Specifications 5
5.4. Checking of Drawings/Plans 5
5.5. Standards To Apply Where Specifications Are Not Furnished 6
5.6. Deviation From Specifications and Drawings/Plans 6
5.7. Precedence of Documents 6
5.8. Ownership and Use of Drawings/Plans, Specifications and Contract Documents 7

6. CONSTRUCTION BY CITY OR BY SEPARATE CONTRACTORS 7
6.1. City's Right To Perform Construction and To Award Separate Contracts 7
6.2. Mutual Responsibility 7
6.3. City Authority Over Coordination 8

7. CITY AND PAYMENT 9
7.1. City's Representative(s) 9
7.2. Means and Methods of Construction 9
7.3. Receipt and Processing of Applications for Payment 9

8. CONTROL OF THE WORK 9
8.1. Supervision of Work by Contractor 9
8.2. Observation of Work by City and Consultant 10
8.3. Access to Work 10
8.4. Existing Utilities 11
8.5. Underground Facilities 12

9. WARRANTY, GUARANTY, AND INSPECTION OF WORK 14
9.1. Warranty and Guaranty 14
9.2. Inspection of Work 15
9.3. Correction of Defective Work 16
9.4. Acceptance and Correction of Defective Work by City 17
9.5. Rights Upon Inspection or Correction 18
9.6. Samples and Tests of Materials and Work 18
9.7. Proof of Compliance of Contract Provisions 19
9.8. Acceptance 19

10. CONTRACTOR'S ORGANIZATION AND EQUIPMENT 19
10.1. Contractor's Legal Address 19
10.2. Contractor's Office at the Work Site 19
10.3. Contractor's Superintendents or Forepersons 19
10.4. Proficiency in English 20
10.5. Contractor's and Subcontractor's Employees 20
10.6. Contractor to Supply Sufficient Workers and Materials 20
10.7. Contractor to List Trades Working 21
10.8. Contractor's Use of the Site 21

11. PROSECUTION AND PROGRESS OF THE WORK 21
11.1. Schedules and Examinations of Contract Documents 21
11.2. Cost Data 23

12. CLAIMS BY CONTRACTOR 24
12.1. General 24
12.2. Procedure 25
12.3. Claim Format 26
12.4. Exclusive Remedy 26
12.5. Mediation 26
12.6. Subcontractor Claims 27

13. LEGAL AND MISCELLANEOUS 27
13.1. Laws and Regulations 27
13.2. Permits and Taxes 27
13.3. Responsibility of Contractor and Indemnification 28
13.4. Concealed or Unknown Conditions 29
13.5. Notice of Hazardous Waste or Materials Conditions 30
13.6. Suspension of Work 31
13.7. Termination of Contract for Cause 32
13.8. Termination of Contract for Convenience 34
13.9. Contingent Assignment of Subcontracts 36
13.10. Remedies and Contract Integration 37
13.11. Patents 38
13.12. Substitution for Patented and Specified Articles 38
13.13. Interest of Public Officers 38
13.14. Limit of Liability 38
13.15. Severability 39

14. MODIFICATIONS OF CONTRACT DOCUMENTS 39
14.1. Alterations, Modifications and Force Account Work 39

15. TIME ALLOWANCES 40
15.1. Time Allowances for Performance of Contract Documents 40
15.2. Change of Contract Time 41
15.3. Notice of Delay 43
15.4. Time Extensions and/or Damages Entitlements for Delays 43
15.5. Liquidated Damages 44

16. WORKING CONDITIONS AND PREVAILING WAGES 45
16.1. Hours of Work 45
16.2. Use of Site/Sanitary Rules 45
16.3. Protection of Work, Persons, Property, and Operations 46
16.4. Responsibility for Safety and Health 46
16.5. Emergencies 47
16.6. Use of Roadways and Walkways 47
16.7. Nondiscrimination 47
16.8. Prevailing Wages 48
16.9. Environmental Controls 48
16.10. Shoring Safety Plan 49

THIS PAGE

WAS INTENTIONALLY

LEFT BLANK

GENERAL CONDITIONS

1. GENERAL

1.1. Documents

Contract Documents are complementary; what is called for by one is as binding as if called for by all. Contract Documents shall not be construed to create a contractual relationship of any kind between (1) Engineer or any City's Representative and Contractor; (2) City and/or its representatives and (except as provided in paragraph 13.9 below) a Subcontractor, sub-Subcontractor, or supplier of any Project labor, materials, or equipment; or (3) between any persons or entities other than City and Contractor. City shall be deemed to be an intended third-party beneficiary of each agreement referenced in clause (2) above, and each such agreement shall so provide. Contractor is fully responsible for Contractor's own acts and omissions. Contractor is responsible for all acts and omissions of its Subcontractors, suppliers, and other persons and organizations performing or furnishing any of the Work, labor, materials, or equipment under a direct or indirect contract with Contractor.

1.2. Exercise of Contract Responsibilities

In exercising its responsibilities and authorities under the Contract Documents, City does not assume any duties or responsibilities to any Subcontractor or supplier and does not assume any duty of care to Contractor, Contractor's Subcontractors or suppliers. Except as expressly set forth in the Contract Documents, in exercising their respective responsibilities and authorities under the Contract Documents, neither Engineer nor any City's Representative assume any duties or responsibilities to any Subcontractor, sub-Subcontractor or supplier nor assume any duty of care to Contractor or any Subcontractor, sub-Subcontractor or suppliers.

1.3. Defined Terms

All abbreviations and definitions of terms used and not otherwise defined in this Document 00700 are set forth in Section 00050, References and Definitions. This Document 00700 subdivides at first level into Articles, and then into paragraphs.

2. BIDDING

2.1. Investigation Prior To Bidding

A. Prior to bidding, Bidders shall perform the work, investigations, research and analysis required by Article 5 of Document 00520, Agreement. Under the Contract Documents, Contractor is charged with all information and knowledge that a reasonable Bidder would ascertain from having performed the required work, investigations, research, and analysis. Bid prices shall include entire cost of all "incidental work" to complete of the Work, as that term is defined in Article 5 of this Document 00700.

///

///

B. Conditions Shown on Contract Documents: Information as to underground conditions, as-built conditions, or other conditions or obstructions indicated in the Contract Documents, *e.g.*, on Drawings/Plans or in Specifications, has been obtained with reasonable care, and has been recorded in good faith. City warrants, and Contractor may rely on, the accuracy of only limited types of information as discussed below.

1. Aboveground and as-built conditions: There is no express or implied warranty and no express or implied representation that any information as to aboveground conditions or as-built conditions indicated in the Contract Documents is correctly shown, or indicated, or complete. As a condition to bidding, Contractor shall verify by independent investigation all aboveground and as-built conditions. In submitting its Bid, Contractor shall rely on the results of its own independent investigation and shall not rely on City-supplied information regarding aboveground conditions and as-built conditions.

2. Subsurface conditions: Contractor may rely only upon the general accuracy of actual reported depths, actual reported character of materials, actual reported soil types, actual reported water conditions, or actual obstructions shown or indicated in the Contract Documents. City is not responsible for (1) the completeness of any subsurface condition information for bidding or construction, (2) Contractor's conclusions or opinions drawn from any subsurface condition information, or (3) subsurface conditions that are not specifically shown. (For example, City is not responsible for soil conditions in areas contiguous to areas where a subsurface condition is shown.)

3. Conditions Shown in Reports and Drawings/Plans Supplied for Informational Purposes: Reference is made to Document 00320, Geotechnical Data and Existing Conditions, for identification of geotechnical reports, "as built" information, and other drawings or other documents describing physical conditions in or relating to existing surface or subsurface conditions or structures at or contiguous to the Site. These materials are not Contract Documents and, except for any "technical data" regarding subsurface conditions specifically identified in Document 00320, Geotechnical Data and Existing Conditions, and "Underground Facilities" data, as limited in Document 00320, Geotechnical Data and Existing Conditions, Contractor shall not in any manner rely on the information in these materials. Subject to the foregoing, Contractor shall make its own independent investigation of all conditions affecting the Work and must not rely on information provided by City.

2.2. Subcontractors

A. Consistent with Public Contract Code Sections 4101 *et seq*., Contractor shall not substitute any other person or firm in place of any Subcontractor listed in the Bid. Subcontractors shall not assign or transfer their subcontracts or permit them to be performed by any other contractor without City's written approval. At City's request, Contractor shall provide City with a complete copy of all executed subcontracts or final commercial agreements with Subcontractors and/or suppliers.

B. Subcontract agreements shall preserve and protect the rights of City under the Contract Documents so that subcontracting will not prejudice such rights. To the extent of the Work to be performed by a Subcontractor, Contractor shall require the Subcontractor's written agreement (1) to be bound to the terms of Contract Documents and (2) to assume vis-à-vis Contractor all the obligations and responsibilities that Contractor assumes toward City under the Contract Documents. (These agreements include for example, and not by way of limitation, all warranties, claims procedures and rules governing submittals of all types to which Contractor is subject under the Contract Documents.)

C. Contractor shall provide for the assignment to City of all rights any Subcontractor may have against any manufacturer, supplier, or distributor for breach of warranties and guarantees relating to the Work performed by the Subcontractor under the Contract Documents.

3. CONTRACT AWARD AND COMMENCEMENT OF THE WORK

3.1. Award of Contract

City will make the Award of Contract by issuing a Notice of Award. As a condition to City signing Document 00520, Agreement, however, Contractor shall deliver to City the executed agreements, forms, bonds, and insurance documents required by Document 00200, Instructions to Bidders in the required quantities and within the required times. Pursuant to Section 6109 (a) and (b) of the Public Contract Code, a public entity is prohibited from awarding a public works contract to a contractor or subcontractor that has been debarred by the Labor Commissioner.

> "A debarred subcontractor may not receive any public money for performing work as a subcontractor on a public works contract, and any public money that may have been paid to a debarred subcontractor by a contractor on the project shall be returned to the awarding body. The contractor shall be responsible for the payment of wages to workers of a debarred subcontractor who has been allowed to work on the project." Cal. Public Contract Code Section 6109(b).

3.2. Commencement of Work

The Contract Time will commence to run on the 30th Day after the issuance of the Notice of Award or, if a Notice to Proceed is given, on the date indicated in the Notice to Proceed. City may give a Notice to Proceed at any time within 30 Days after the Notice of Award. Contractor shall not do any Work at the Site prior to the date on which the Contract Time commences to run. Contractor shall not do any Work until all the required documents listed in Document 00510, Notice of Award, have been approved by the City.

4. BONDS AND INSURANCE

4.1. Bonds

A. At or before the date indicated in Document 00510, Notice of Award, Contractor shall file with City the following bonds:

1. Corporate surety bond, in the form of Document 00610, Construction Performance Bond, in the penal sum of 100% of the Contractor's Bid as accepted, to guarantee faithful performance of the Work; and

2. Corporate surety bond, in the form of Document 00620, Construction Labor and Material Payment Bond, in the penal sum of 100% of the Contractor's Bid as accepted, to guarantee payment of wages for services engaged and of bills contracted for materials, supplies, and equipment used in performance of the Work.

3. Before the labor and materials bond may be released, Contractor shall submit satisfactory evidence that Contractor is not delinquent in payments to employees, Subcontractors, suppliers, or creditors for labor and materials incorporated into Work. This specifically includes, without limitation, conditional lien release forms for the current progress payment and unconditional release forms for past progress payments (Document 00650, Agreement and Release of Any and All Claims). City also may elect in its sole discretion to pay progress payments by joint check to Contractor and each Subcontractor having an interest in that progress payment in such amount.

B. All corporate sureties must be acceptable and satisfactory to City. Corporate sureties on all bonds required under this Contract must be duly licensed to do business in the State of California and must have an A.M. Best Company financial rating of A-VI or better.

4.2. Insurance

See Document 00820, Insurance Requirements, incorporated herein by this reference.

5. DRAWINGS/PLANS AND SPECIFICATIONS

5.1. Intent

A. Drawings/Plans and Specifications are intended to describe a functionally complete and operable Project (and all parts thereof) to be constructed in accordance with the requirements of Contract Documents. Contractor shall perform any work, provide services and furnish any materials or equipment that may reasonably be inferred from the requirements of Contract Documents or from prevailing custom or trade usage as being required to produce this intended result. Contractor shall interpret words or phrases used to describe work (including services), materials or equipment that have well-known technical or construction industry or trade meaning in accordance with that meaning. Drawings/Plans' intent specifically includes the intent to depict construction that complies with all applicable laws, codes and standards.

B. As part of the "Work," Contractor shall provide all labor, materials, equipment, machinery, tools, facilities, services, employee training and testing, hoisting facilities, shop drawings, storage, testing, security, transportation, disposal, the securing of all necessary or required field dimensions, the cutting or patching of existing materials, notices, permits, documents, reports, agreements and any other items required or necessary to timely and fully complete Work described and the results intended by Contract Documents and, in particular, Drawings/Plans and Specifications. Divisions and Specification Sections and the identification on any Drawings/Plans shall not control Contractor in dividing Work among Subcontractors or suppliers or delineating the Work to be performed by any specific trade.

C. Contractor shall perform reasonably implied parts of Work as "incidental work" although absent from Drawings/Plans and Specifications. Incidental work includes any work not shown on Drawings/Plans or described in Specifications that is necessary or normally or customarily required as a part of the Work shown on Drawings/Plans or described in Specifications. Incidental work includes any Work necessary or required to make each installation satisfactory, legally operable, functional, and consistent with the intent of Drawings/Plans and Specifications or the requirements of Contract Documents including required tasks to be performed under Division 1 of Specifications. Contractor shall perform incidental work without extra cost to City. Incidental work shall be treated as if fully described in Specifications and shown on Drawings/Plans, and the expense of incidental work shall be included in price Bid and Contract Sum.

5.2. Drawing Details

A typical or representative detail on Drawings/Plans shall constitute the standard for workmanship and material throughout corresponding parts of Work. Where necessary, and where reasonably inferable from Drawings/Plans, Contractor shall adapt such representative detail for application to such corresponding parts of Work. The details of such adaptation shall be subject to prior approval by City. Repetitive features shown in outline on Drawings/Plans shall be in exact accordance with corresponding features completely shown.

5.3. Interpretation of Drawings/Plans and Specifications

Should any discrepancy appear or any misunderstanding arise as to the import of anything contained in Drawings/Plans and Specifications, or should Contractor have any questions or requests relating to Drawings/Plans or Specifications, Contractor shall refer the matter to City, in writing. City will issue with reasonable promptness written responses, clarifications or interpretations as City may determine necessary, which shall be consistent with the intent of and be reasonably inferable from Contract Documents. Such written clarifications or interpretations shall be binding upon Contractor. If Contractor believes that a written response, clarification or interpretation justifies an adjustment in the Contract Sum or Contract Time, Contractor shall give City prompt written notice as provided in Section 01250, Modification Procedures. If the parties are unable to agree to the amount or extent of the adjustment, if any, then Contractor shall perform the Work in conformance with City's response, clarification, or interpretation and may make a written claim for the adjustment as provided in Article 12 of this Document 00700.

5.4. Checking of Drawings/Plans

Before undertaking each part of Work, Contractor shall carefully study and compare Contract Documents and check and verify pertinent figures shown in the Contract Documents and all applicable field measurements. Contractor shall be responsible for any errors that might have been avoided by such comparison. Figures shown on Drawings/Plans shall be followed; Contractor shall not scale measurements. Contractor shall promptly report to City, in writing, any conflict, error, ambiguity or discrepancy that Contractor may discover. Contractor shall obtain a written interpretation or clarification from City before proceeding with any Work affected thereby. Contractor shall provide City with a follow-up correspondence every five days until it receives a satisfactory interpretation or clarification.

5.5. Standards To Apply Where Specifications Are Not Furnished

The following general specifications shall apply wherever in the Specifications, or in any directions given by City in accordance with or supplementing Specifications, it is provided that Contractor shall furnish materials or manufactured articles or shall do work for which no detailed specifications are shown. Materials or manufactured articles shall be of the best grade, in quality and workmanship, obtainable in the market from firms of established good reputation. If not ordinarily carried in stock, the materials or manufactured articles shall conform to industry standards for first-class materials or articles of the kind required, with due consideration of the use to which they are to be put. Work shall conform to the usual standards or codes, such as those cited in Section 00050, References and Definitions, for first-class work of the kind required. Contractor shall specify in writing to City the materials to be used or Work to be performed under this paragraph 5.5 ten Business Days prior to furnishing such materials or performing such Work.

5.6. Deviation From Specifications and Drawings/Plans

A. Contractor shall perform Work in accordance with Drawings/Plans and Specifications. Contractor may deviate from Drawings/Plans or the dimensions given in the Drawings/Plans, and may deviate from the Specifications, only upon City's advance written approval of the proposed deviation.

B. City may order that locations, lines and grades for Work vary from those shown on Drawings/Plans. Changes may be made in locations, lines or grades for Work under any item of Contract Documents. No payment in addition to unit price fixed in the Contract Documents for Work under respective items will be allowed on account of variations from Drawings/Plans in unit price items. In lump sum contracts, or where there are no unit price items covering Work affected by variations of locations, lines or grades, all changes in the Contract Documents will be made as set forth in Article 14 of this Document 00700.

5.7. Precedence of Documents

A. In the case of discrepancy or ambiguity in the Contract Documents, the following order of precedence shall prevail:

1. Modifications in inverse chronological order (i.e., most recent first), and in the same order as specific portions they are modifying;
2. Document 00520, Agreement, and terms and conditions referenced therein;
3. Document 00800, Supplementary Conditions;
4. Document 00700, General Conditions;
5. Division 1 - General Requirements;
6. Division 3 and above - Special Provisions;
7. Drawings/Plans;
8. Division 2 - Technical Provisions;
9. Standard Details
10. Written numbers over figures, unless obviously incorrect;
11. Figured dimensions over scaled dimensions, unless obviously incorrect;
12. Large-scale drawings over small-scale drawings, unless obviously incorrect.

///

B. Any conflict between Drawings/Plans and Division 2 and 3 Specifications will be resolved in favor of the document of the latest date (i.e., the most recent document), and if the dates are the same or not determinable, then in favor of Specifications.

C. Any conflict between a bill or list of materials shown in the Contract Documents and the actual quantities required to complete Work required by Contract Documents, will be resolved in favor of the actual quantities.

D. In the event the Specifications include divisions above Division 3 (e.g., Division 4 and above), then such divisions shall be included within the Contract Documents unless identified otherwise.

5.8. Ownership and Use of Drawings/Plans, Specifications and Contract Documents

Drawings/Plans, Specifications and other Contract Documents were prepared for use for Work of Contract Documents only. No part of Contract Documents shall be used for any other construction or for any other purpose except with the written consent of City. Any unauthorized use of Contract Documents is prohibited and at the sole liability of the user.

6. CONSTRUCTION BY CITY OR BY SEPARATE CONTRACTORS

6.1. City's Right To Perform Construction and To Award Separate Contracts

City may perform with its own forces, construction or operations related to the Project. City may also award separate contracts in connection with other portions of the Project or other construction or operations, on the Site or areas contiguous to the Site, under conditions similar to these Contract Documents, or may have utility owners perform other work. When separate contracts are awarded for different portions of the Project or other construction or operations on the Site, the term "Contractor" in these Contract Documents shall mean the Contractor herein.

6.2. Mutual Responsibility

A. Contractor shall afford all other contractors, utility owners and City (if City is performing work with its own forces), proper and safe access to the Site, and reasonable opportunity for the installation and storage of their materials. Contractor shall ensure that the execution of its Work properly connects and coordinates with others' work, and shall cooperate with them to facilitate the progress of the Work.

B. Contractor shall coordinate its Work with the work of other separate contractors, City, and utility owners. Contractor shall hold coordination meetings with other contractors, City and its representatives, and utility owners as required by Section 01315, Project Meetings.

C. Unless otherwise provided in the Contract Documents, Contractor shall do all cutting, fitting and patching of the Work that may be required to make its several parts come together properly and integrate with such other work. Contractor shall not endanger any work of other separate contractors, City or utility owners by cutting, excavating or otherwise altering their work and will only cut or alter their work with the written consent of City and the others whose work will be affected.

D. Contractor's duties and responsibilities under this Document 00700 are for the benefit of City and also for the benefit of such other contractors and utility owners working at the Site to the extent that there are comparable provisions for the benefit of Contractor in the direct contracts between City and such other contractors and utility owners.

E. To the extent that any part of Contractor's Work is to interface with work performed or installed by other contractors or utility owners, Contractor shall inspect and measure the in-place work. Contractor shall promptly report to City in writing any defect in in-place work that will impede or increase the cost of Contractor's interface unless corrected. City will require the Contractor responsible for the Defective Work to make corrections so as to conform to its contract requirements, or, if the defect is the result of an error or omission in the Contract Documents, issue a Change Order. If Contractor fails to measure, inspect and/or report to City in writing defects that are reasonably discoverable, Contractor shall bear all costs of accomplishing the interface acceptable to City. This provision shall be included in any and all other contracts or subcontracts for Work to be performed where such a conflict could exist.

6.3. City Authority Over Coordination

A. City will have authority over coordination of the activities of multiple contractors in cases where City performs work with its own forces or contracts with others for the performance of other work on the Project, or utilities work on the Site. City may at any time and in its sole discretion, designate a person or entity other than City to have authority over the coordination of the activities among the various contractors. City's authority with respect to coordination of the activities of multiple contractors and utility owners shall not relieve Contractor of its obligation to other contractors and utility owners to coordinate its Work with other contractors and utility owners as specified in paragraph 6.2 of this Document 00700. Contractor shall promptly notify City in writing when another contractor on the Project fails to coordinate its work with the Work of Contract Documents.

B. Contractor shall suspend any part of the Work or carry on the same in such manner as directed by City when such suspension or prosecution is necessary to facilitate the work of other contractors or workers. No damages or claims by Contractor will be allowed if the suspension or Work change is due in whole or in part to Contractor's failure to perform its obligation to coordinate its Work with other contractors and utility owners. Damages or claims will be allowed only to the extent of fault by City if the suspension or Work change is due in whole or in part to another contractor's failure to coordinate its work with Contractor, other contractors, and utility owners. City reserves the right to back charge Contractor for any damages or claims incurred by other contractors as a result of Contractor's failure to perform its obligations to coordinate with other contractors and utility owners. City may deposit the funds retained with a Court of competent jurisdiction pursuant to applicable interpleader procedures and Contractor releases City of further liability regarding such funds.

///

///

7. CITY AND PAYMENT

7.1. City's Representative(s)

City's Representative(s) will have limited authority to act on behalf of City as set forth in the Contract Documents. Except as otherwise provided in these Contract Documents or subsequently identified in writing by City, City will issue all communications to Contractor through City's Representative, and Contractor shall issue all communications to City through City's Representative in a written document delivered to City. Should any direct communications between Contractor and City's consultants, architects or engineers not identified in Article 2 of Document 00520, Agreement occur during field visits or by telephone, Contractor shall immediately confirm them in a written document copied to City.

7.2. Means and Methods of Construction

Subject to those rights specifically reserved in the Contract Documents, City will not supervise, or direct, or have control over, or be responsible for, Contractor's means, methods, techniques, sequences or procedures of construction, or the safety precautions and programs incident thereto, or Contractor's failure to comply with laws and regulations applicable to the furnishing or performance of Work. City will not be responsible for Contractor's failure to perform or furnish the Work in accordance with Contract Documents.

7.3. Receipt and Processing of Applications for Payment

As required by Section 01200, Measurement and Payment, Contractor shall prepare the schedules, submit Applications for Payment and warrant title to all Work covered by each Application for Payment. City will review Contractor's Applications for Payment and make payment thereon, and Contractor shall make payments to Subcontractors, suppliers and others, as required by Section 01200, Measurement and Payment.

8. CONTROL OF THE WORK

8.1. Supervision of Work by Contractor

A. Contractor shall supervise, inspect, and direct Work competently and efficiently, devoting the attention and applying such personal skills and expertise as may be required and necessary to perform Work in accordance with Contract Documents. Contractor shall be solely responsible for and have control and charge of construction means, methods, techniques, sequences and procedures, safety precautions and programs in connection with the Work. Contractor shall be responsible to see that the completed Work complies accurately with Contract Documents.

B. Contractor shall keep on the Site at all times during Work progress a competent resident Superintendent, who shall not be replaced without City's express written consent. The Superintendent shall be Contractor's representative at the Site and shall have complete authority to act on behalf of Contractor. All communications to and from the Superintendent shall be as binding as if given to or by Contractor.

///

8.2. Observation of Work by City and Consultant

A. Work shall be performed under City's general observation and administration. Contractor shall comply with City's directions and instructions in accordance with the terms of Contract Documents, but nothing contained in these General Conditions shall be taken to relieve Contractor of any obligations or liabilities under the Contract Documents. City's failure to review or, upon review, failure to object to any aspect of Work reviewed, shall not be deemed a waiver or approval of any non-conforming aspect of Work.

B. City may engage an independent consultant or engineer (collectively for purposes of this paragraph 8.2, "Engineer") to assist in administering the Work. If so engaged, Engineer will advise and consult with City, but will have authority to act on behalf of City only to extent provided in the Contract Documents or as set forth in writing by City. Engineer will not be responsible for and will not have control or charge of construction means, methods, techniques, sequences or procedures, or for safety precautions and programs in connection with Work. Engineer will not be responsible for or have control over the acts or omissions of Contractor, Subcontractors or their agents or employees, or any other persons performing Work.

C. Engineer may review Contractor's submittals, such as Shop Drawings, Product Data, and Samples, but only for conformance with design concept of Work and with information given in the Contract Documents.

D. Engineer may visit the Site at intervals appropriate to stage of construction to become familiar generally with the progress and quality of Work and to determine in general if Work is proceeding in accordance with Contract Documents. Based on its observations, Engineer may recommend to City that it disapprove or reject Work that Engineer believes to be defective or will not produce a complete Project that conforms to Contract Documents or will prejudice the integrity of the design concept of the completed Project as a functioning whole as indicated by Contract Documents. City will also have authority to require special inspection or testing of Work, whether or not the Work is fabricated, installed or completed.

E. Engineer may conduct inspections to recommend to City the dates that Contractor has achieved Substantial Completion and Final Acceptance, and will receive and forward to City for review written warranties and related documents required by Contract Documents.

8.3. Access to Work

During performance of Work, City and its agents, consultants, and employees may at any time enter upon Work, shops or studios where any part of the Work may be in preparation, or factories where any materials for use in Work are being or are to be manufactured, and Contractor shall provide proper and safe facilities for this purpose, and shall make arrangements with manufacturers to facilitate inspection of their processes and products to such extent as City's interests may require. Other contractors performing work for City may also enter upon Work for all purposes required by their respective contracts. Subject to the rights reserved in the Contract Documents, Contractor shall have sole care, custody, and control of the Site and its Work areas.

8.4. Existing Utilities

Drawings/Plans may indicate above and below grade structures, drainage lines, storm drains, sewers, water, gas, electrical, chemical, hot water, and other similar items and utilities, and additional information may be on file at the regional notification center, "Underground Service Alert" ("USA"). Contractor shall locate these known existing installations before proceeding with trenching or other operations that may cause damage, shall maintain them in service where appropriate, and shall repair any damage to them caused by the Work, at no increase in Contract Sum. Additional utilities whose locations are unknown to City are suspected to exist. Contractor shall be alert to their existence; if they are encountered, Contractor shall immediately report to City for disposition of the same. In addition to reporting if any utility is damaged, Contractor shall take appropriate action as provided in this Document 00700. Additional compensation or extension of time on account of utilities not shown or otherwise brought to Contractor's attention, including reasonable action taken to protect or repair damage, shall be determined as provided in this Document 00700.

A. At no additional cost to City, Contractor shall incorporate into the Work main or trunk line utilities identified in the Contract Documents and other utilities or underground structures known or reasonably discernible and that will remain in service, including reasonable adjustments to the design location (including minor relocations) of the existing or new installations. Contractor shall take immediate action to restore any in service installations damaged by Contractor's operations. Should City determine that Contractor has not responded in a timely manner or not diligently pursued completion of the Work, City may restore service and deduct the costs of such action by City from the amounts due under the Contract.

B. Consistent with Government Code Section 4215, as between City and Contractor, City will be responsible for the timely removal, relocation, or protection of existing main or trunk line utility facilities located on the Site only if such utilities are not identified in the Contract Documents or Document 00320, Geotechnical Data and Existing Conditions. City will compensate for the cost of locating and repairing damage not due to Contractor's failure to exercise reasonable care, removing and relocating such main or trunk line utility facilities not indicated in the Contract Documents or Document 00320, Geotechnical Data and Existing Conditions, with reasonable accuracy, and equipment on the Project necessarily idled during such work.

C. Prior to performing Work at the Site, Contractor shall lay out the locations of known underground utilities that are to remain in service and other significant known underground installations. At no additional cost to City, prior to commencing other Work in proximity to such known underground utilities or installations that can be readily inferred from adjacent surface improvements, Contractor shall further locate, by carefully excavating with small equipment, potholing and principally by hand, such utilities or installations that are to remain and that are subject to damage. This obligation applies to all utilities (including, but not limited to, those referenced above).

///

///

D. Nothing in this Document 00700 shall be deemed to require City to indicate the presence of existing service laterals or appurtenances whenever the presence of such utilities on the Site can be inferred by Contractor from the presence of an underground transmission main or other visible facilities, such as buildings, new asphalt, meters and junction boxes, on or adjacent to the Site. Contractor shall immediately secure all available information and notify City and utility, in writing, of its discovery, while performing Work under the Contract Documents, of any utility facilities not identified in the Drawings/Plans and Specifications.

8.5. Underground Facilities

A. Before commencing work of digging trenches or excavation, Contractor shall review all information available regarding subsurface conditions, including but not limited to information supplied in Document 00320, Geotechnical Data and Existing Conditions, and subject to the terms and conditions of these documents, Contractor shall also comply with Government Code Sections 4216 to 4216.9, and in particular Section 4216.2 which provides, in part:

> "Except in an emergency, any person planning to conduct any excavation shall contact the appropriate regional notification center, at least two working days, but no more than 14 calendar days, prior to commencing that excavation, if the excavation will be conducted in an area that is known, or reasonably should be known, to contain subsurface installations other than the underground facilities owned or operated by the excavator and, if practical, the excavator shall delineate with white paint or other suitable markings the area to be excavated….The regional notification center shall provide an inquiry identification number to the person who contacts the center pursuant to this section and shall notify any member, if known, who has a subsurface installation in the area of the proposed excavation."

B. Contractor shall contact USA, and schedule the Work to allow ample time for the center to notify its members and, if necessary, for any member to field locate and mark its facilities. Contractor is charged with knowledge of all subsurface conditions reflected in USA records. Prior to commencing excavation or trenching work, Contractor shall provide City with copies of all USA records secured by Contractor. Contractor shall advise City of any conflict between information provided in Document 00320, Geotechnical Data and Existing Conditions, the Drawings/Plans and that provided by USA records. Contractor's excavation shall be subject to and comply with the Contract Documents, including without limitation Paragraphs 2.1 and 8.4 of this Document 00700.

C. The cost of all of the following will be included in the Contract Sum and Contractor shall have full responsibility for (a) reviewing and checking all available information and data including, but not limited to, Document 00320, Geotechnical Data and Existing Conditions and information on file at USA; (b) locating all Underground Facilities shown or indicated in the Contract Documents, available information, or indicated by visual observation including, but not limited to, and by way of example only, engaging qualified locating services and all necessary backhoeing and potholing; (c) coordination of the Work with the owners of such Underground Facilities during construction; and (d) the safety and protection of all such Underground Facilities and repairing any damage thereto resulting from the Work.

D. If an Underground Facility is uncovered or revealed at or contiguous to the Site which was not shown or indicated in the materials supplied by City or in information on file at USA or is otherwise reasonably available to Contractor, then Contractor shall, promptly after becoming aware thereof and before further disturbing conditions affected thereby (and in no event later than seven Days), and prior to performing any Work in connection therewith (except in an emergency as required by Article 16 of this Document 00700), identify the owner of such Underground Facility and give written notice to that owner and to City. During such time, Contractor shall be responsible for the safety and protection of such Underground Facility.

E. Contractor shall be allowed an increase in the Contract Sum or an extension of the Contract Time, or both, to the extent that they are attributable to the existence of any Underground Facility that is owned and was built by City only where the Underground Facility:

1. Was not shown or indicated in the Contract Documents or in the information supplied pursuant to Document 00320, Geotechnical Data and Existing Conditions, or in information on file at USA;

2. Contractor did not know of it; and

3. Contractor could not reasonably have been expected to be aware of it or to have anticipated it from the information available. (For example, if surface conditions such as pavement repairs, valve covers, or other markings, indicate the presence of an Underground Facility, then an increase in the Contract Price or an extension of the Contract Time will not be due, even if the Underground Facility was not indicated in the Contract Documents, in the information supplied to Contractor pursuant to Document 00320, Geotechnical Data and Existing Conditions, in information on file at USA, or otherwise reasonably available to Contractor.)

F. Contractor shall bear the risk that Underground Facilities not owned or built by City may differ in nature or locations shown in information made available by City pursuant to Document 00320, Geotechnical Data and Existing Conditions, in information on file at USA, or otherwise reasonably available to Contractor. Underground Facilities are inherent in construction involving digging of trenches or other excavations and Contractor is to apply its skill and industry to verify the information available.

///

///

///

///

///

///

9. WARRANTY, GUARANTY, AND INSPECTION OF WORK

9.1. Warranty and Guaranty

A. General Representations and Warranties: Contractor represents and warrants that it is and will be at all times fully qualified and capable of performing every Phase of the Work and to complete Work in accordance with the terms of Contract Documents. Contractor warrants that all construction services shall be performed in accordance with generally accepted professional standards of good and sound construction practices and all requirements of Contract Documents. Contractor warrants that Work, including but not limited to each item of materials and equipment incorporated therein, shall be new, of suitable grade of its respective kind for its intended use, and free from defects in design, engineering, materials, construction and workmanship. Contractor warrants that Work shall conform in all respects with all applicable requirements of federal, state and local laws, applicable construction codes and standards, licenses, and permits, Drawings/Plans and Specifications and all descriptions set forth therein, and all other requirements of Contract Documents. Contractor shall not be responsible, however, for the negligence of others in the specification of specific equipment, materials, design parameters and means or methods of construction where that is specifically shown and expressly required by Contract Documents.

B. Extended Guarantees: Any guarantee exceeding one year provided by the supplier or manufacturer of any equipment or materials used in the Project shall be extended for such term. Contractor expressly agrees to act as co-guarantor of such equipment and materials for a period of one (1) year from date of Final Acceptance, unless a longer period is specified elsewhere in the Contract Documents, and shall supply City with all warranty and guarantee documents relative to equipment and materials incorporated in the Project and guaranteed by their suppliers or manufacturers.

C. Environmental and Toxics Warranty: The covenants, warranties and representations contained in this paragraph 9.1.C are effective continuously during Contractor's Work on the Project and following cessation of labor for any reason including, but not limited to, Project completion. Contractor covenants, warrants and represents to City that:

1. To Contractor's knowledge after due inquiry, no lead or asbestos-containing materials were installed or discovered in the Project at any time during Contractor's construction thereof. If any lead or asbestos-containing materials were discovered, Contractor made immediate written disclosure to City.

2. To Contractor's knowledge after due inquiry, no electrical transformers, light fixtures with ballasts or other equipment containing PCBs are or were located on the Project at any time during Contractor's construction thereof.

3. To Contractor's knowledge after due inquiry, no storage tanks for gasoline or any other toxic substance are or were located on the Project at any time during Contractor's construction thereof. If any such materials were discovered, Contractor made immediate written disclosure to City.

///

4. Contractor's operations concerning the Project are and were not in violation of any applicable environmental federal, state, or local statute, law or regulation dealing with hazardous materials substances or toxic substances and no notice from any governmental body has been served upon Contractor claiming any violation of any such law, ordinance, code or regulation, or requiring or calling attention to the need for any work, repairs, construction, alteration, or installation on or in connection with the Project in order to comply with any such laws, ordinances, codes, or regulations, with which Contractor has not complied. If there are any such notices with which Contractor has complied, Contractor shall provide City with copies thereof.

9.2. Inspection of Work

A. All materials, equipment, and workmanship used in Work shall be subject to inspection and testing at all times during construction and/or manufacture in accordance with the terms of Contract Documents. Work and materials, and manufacture and preparation of materials, from beginning of construction until final completion and acceptance of Work, shall be subject to inspection and rejection by City, its agents, representatives or independent contractors retained by City to perform inspection services, or governmental agencies with jurisdictional interests. Contractor shall provide them proper and safe conditions for such access and advise them of Contractor's Site safety procedures and program so that they may comply therewith as applicable. Upon request or where specified, City shall be afforded access for inspection at the source of supply, manufacture or assembly of any item of material or equipment, with reasonable accommodations supplied for making such inspections.

B. Contractor shall give City at least one full working day notice of readiness of Work for all required inspections, tests or approvals, and shall cooperate with inspection and testing personnel to facilitate required inspections or tests.

C. If applicable laws or regulations of any public body having jurisdiction require any Work (or part thereof) specifically to be inspected, tested or approved by an employee or other representative of such public body, Contractor shall assume full responsibility for arranging and obtaining such inspections, tests or approvals, and furnish City with the required certificates of inspection, or approval. City will pay the cost of initial testing and Contractor shall pay all costs in connection with any follow-up or additional testing. Contractor shall also be responsible for arranging and obtaining and shall pay all costs in connection with any inspections, tests or approvals required for the acceptance of materials or equipment to be incorporated in the Work, or of materials, mix designs, or equipment submitted for approval prior to Contractor's purchase thereof for incorporation in the Work.

D. If Contractor covers any Work, or the work of others, prior to any required inspection, test or approval without written approval of City, Contractor shall uncover the Work at City's request. Contractor shall bear the expense of uncovering Work and replacing Work.

E. In any case where Contractor covers Work contrary to City's request, Contractor shall uncover Work for City's observation or inspection at City's request. Contractor shall bear the cost of uncovering and replacing Work.

F. Whenever required by City, Contractor shall furnish tools, labor and materials necessary to make examination of Work that may be completed or in progress, even to extent of uncovering or taking down portions of finished Work. Should Work be found unsatisfactory, cost of making examination and of reconstruction shall be borne by Contractor. If Work is found to be satisfactory, City, in manner herein prescribed for paying for alterations, modifications, and extra Work, except as otherwise herein specified, will pay for examination.

G. Inspection of the Work by or on behalf of City, or City's failure to do so, shall not under any circumstances be deemed a waiver or approval of any non-conforming aspect of the Work. Contractor shall have an absolute duty, in the absence of a written Change Order signed by City, to perform Work in conformance with the Contract Documents.

H. Any inspection, evaluation, or test performed by or on behalf of City relating to the Work is solely for the benefit of City, and shall not be relied upon by Contractor. Contractor shall not be relieved of the obligation to perform Work in accordance with the Contract Documents, nor relieved of any guaranty, warranty, or other obligation, as a result of any inspections, evaluations, or tests performed by City, whether or not such inspections, evaluations, or tests are permitted or required under the Contract Documents. Contractor shall be solely responsible for testing and inspecting Work already performed to determine whether such Work is in compliance with the requirements of the Contract Documents and is in proper condition to receive later Work.

9.3. Correction of Defective Work

A. If Contractor fails to supply sufficient skilled workers, suitable materials or equipment, or to furnish or perform the Work in such a way that the completed Work will conform to Contract Documents, City may order Contractor to replace any Defective Work, or stop any portion of Work to permit City (at Contractor's expense) to replace such Defective Work. These City rights are entirely discretionary on the part of the City, and shall not give rise to any duty on the part of City to exercise the rights for the benefit of Contractor or any other party.

B. City may direct Contractor to correct any Defective Work or remove it from the Site and replace it with Work that is not defective and satisfactorily correct or remove and replace any damage to other Work or the work of others resulting from the correction or removal. Contractor shall be responsible for any and all claims, costs, losses and damages caused by or resulting from such correction or removal. A Change Order will be issued incorporating the necessary revisions in the Contract Documents with respect to the Work and the Contract Sum. If the parties are unable to agree to the amount of an appropriate decrease in the Contract Sum, City may decide the proper amount or, in its discretion may elect to leave the Contract Sum unchanged and deduct from moneys due Contractor, all such claims, costs, losses and damaged caused by or resulting from the correction or removal. If Contractor disagrees with City's calculations, it may make a claim as provided in Article 12 of this Document 00700. City's rights under this paragraph 9.3.B shall be in addition to any other rights it may have under the Contract Documents or by law.

///

C. Correction Period: If within one year after the date of Final Acceptance, or such longer period of time as may be prescribed by laws or regulations, or by the terms of Contract Documents, any Work is found to be defective, Contractor shall promptly, without cost to City and in accordance with City's written instructions, correct such Defective Work. Contractor shall remove any Defective Work rejected by City and replace it with Work that is not defective, and satisfactorily correct or remove and replace any damage to other Work or the work of others resulting therefrom. If Contractor fails to promptly comply with the terms of such instructions, or in an emergency where delay would cause serious risk of loss or damage, City may have the Defective Work corrected or the rejected Work removed and replaced. Contractor shall pay for all claims, costs, losses and damages caused by or resulting from such removal and replacement. Where Contractor fails to correct Defective Work, or defects are discovered outside the correction period, City shall have all rights and remedies granted by law.

D. In special circumstances where a part of the Work is occupied or a particular item of equipment is placed in continuous service before Final Acceptance of all the Work, the correction period for that part of Work or that item may start to run from an earlier date if so provided by Change Order.

E. Where Defective Work or rejected Work (and damage to other Work resulting therefrom) has been corrected, removed, or replaced under this provision after the commencement of the correction period, the correction period hereunder with respect to such Work shall be extended for an additional period of one year after such correction or removal and replacement has been satisfactorily completed.

9.4. Acceptance and Correction of Defective Work by City

A. City may accept Defective Work. Contractor shall pay all claims, costs, losses and damages attributable to City's evaluation of and determination to accept such Defective Work. If City accepts any Defective Work prior to final payment, a Change Order will be issued incorporating the necessary revisions in the Contract Documents with respect to the Work and the Contract Sum. If the parties are unable to agree to the amount of an appropriate decrease in the Contract Sum, City may deduct from moneys due Contractor, all claims, costs, losses, damages, expenses and liabilities attributable to the Defective Work. If Contractor disagrees with City's calculations, Contractor may make a claim as provided in Article 12 of this Document 00700. If City accepts any Defective Work after final payment, Contractor shall pay to City, an appropriate amount as determined by City.

///

///

///

///

///

///

B. City may correct and remedy deficiency if, after five Days' written notice to Contractor, Contractor fails to correct Defective Work or to remove and replace rejected Work in accordance with paragraph 9.3.B of this Document 00700; or provide a plan for correction of Defective Work acceptable to City; or perform Work in accordance with Contract Documents. In connection with such corrective and remedial action, City may exclude Contractor from all or part of the Site; take possession of all or part of Work and suspend Contractor's Work related thereto; take possession of all or part of Contractor's tools, appliances, construction equipment and machinery at the Site; and incorporate in Work any materials and equipment stored at the Site or for which City has paid Contractor but which are stored elsewhere. Contractor shall allow City, its representatives, agents, employees, and other contractors and Engineer's consultants access to the Site to enable City to exercise the rights and remedies under this paragraph 9.4.B. Contractor shall be responsible for all claims, costs, losses, damages, expenses and liabilities incurred or sustained by City in exercising such rights and remedies. A Change Order will be issued incorporating the necessary revisions in the Contract Documents with respect to Work and the Contract Sum. If the parties are unable to agree to the amount of an appropriate decrease in the Contract Sum, City may deduct from moneys due Contractor, all claims, costs, losses and damages caused by or resulting from the correction or removal. If Contractor disagrees with City's calculations, Contractor may make a claim as provided in Article 12 of this Document 00700.

9.5. Rights Upon Inspection or Correction

A. Contractor shall not be allowed an extension of Contract Time because of any delay in the performance of Work attributable to the exercise by City of its rights and remedies under this Article 9. Where City exercises its rights under this Article 9, it retains all other rights it has by law or under the Contract Documents including, but not limited to, the right to terminate Contractor's right to proceed with the Work under the Contract Documents and/or make a claim or back charge where a Change Order cannot be agreed upon.

B. Inspection by City shall not relieve Contractor of its obligation to have furnished material and workmanship in accordance with Contract Documents. Payment for Work completed through periodic progress payments or otherwise shall not operate to waive City's right to require full compliance with Contract Documents and shall in no way be deemed as acceptance of the Work paid therefore. Contractor's obligation to complete the Work in accordance with Contract Documents shall be absolute, unless City agrees otherwise in writing.

9.6. Samples and Tests of Materials and Work

Contractor shall furnish, in such quantities and sizes as may be required for proper examination and tests, samples or test specimens of all materials to be used or offered for use in connection with Work. Contractor shall prepare samples or test specimens at its expense and furnish them to City. Contractor shall submit all samples in ample time to enable City to make any necessary tests, examinations, or analyses before the time it is desired to incorporate the material into the Work.

///

9.7. Proof of Compliance of Contract Provisions

In order that City may determine whether Contractor has complied or is complying with requirements of Contract Documents not readily enforceable through inspection and tests of Work and materials, Contractor shall at any time, when requested, submit to City properly authenticated documents or other satisfactory proofs of compliance with all applicable requirements.

9.8. Acceptance

Inspection by City or its authorized agents or representatives, any order or certificate for the payment of money, any payment, acceptance of the whole or any part of Work by City, any extension of time, any verbal statements on behalf of City or its authorized agents or representatives shall not operate as a waiver or modification of any provision of the Contract Documents, or of any power reserved to City herein or therein or any right to damages provided in the Contract Documents. Any waiver of any breach of the Contract Documents shall not be held to be a waiver of any other subsequent breach.

10. CONTRACTOR'S ORGANIZATION AND EQUIPMENT

10.1. Contractor's Legal Address

Address and facsimile number given in Contractor's Bid are hereby designated as Contractor's legal address and facsimile number. Contractor may change its legal address and facsimile number by notice in writing, delivered to City, which in conspicuous language advises City of a change in legal address or facsimile number, and which City accepts in writing. Delivery to Contractor's legal address or depositing in any post office or post office box regularly maintained by the United States Postal Service, in a wrapper with postage affixed, directed to Contractor at legal address, or of any drawings, notice, letter or other communication, shall be deemed legal and sufficient service thereof upon Contractor. Facsimile to Contractor's designated facsimile number of any letter, memorandum, or other communication on standard or legal sized paper, with proof of facsimile transmission, shall be deemed legal and sufficient service thereof upon Contractor.

10.2. Contractor's Office at the Work Site

As specified in the Contract Documents, Contractor may be required to maintain an office at the Site, which office shall be headquarters of a Contractor representative authorized to transmit to and receive from City, communications, instructions or Drawings/Plans. Communications, instructions, or Drawings/Plans given to Contractor's representative or delivered at the Site office in representative's absence shall be deemed to have been given to Contractor.

10.3. Contractor's Superintendents or Forepersons

Contractor shall at all times be represented on Site by one or more superintendents or forepersons authorized and competent to receive and carry out any instructions that City may give, and shall be liable for faithful observance of instructions delivered to Contractor or to authorized representative or representatives on Site.

///

///

10.4. Proficiency in English

Supervisors, security guards, safety personnel and employees who have unescorted access to the Site shall possess proficiency in the English language in order to understand, receive and carry out oral and written communications or instructions relating to their job functions, including safety and security requirements.

10.5. Contractor's and Subcontractor's Employees

Contractor shall employ, and shall permit its Subcontractors to employ, only competent and skillful personnel to do Work. If City notifies Contractor that any of its employees, or any of its Subcontractors' employees on Work is incompetent, unfaithful, disorderly or profane, or fails to observe customary standards of conduct or refuses to carry out any provision of the Contract Documents, or uses threatening or abusive language to any person on Work representing City, or violates sanitary rules, or is otherwise unsatisfactory, and if City requests that such person be discharged from Work, then Contractor or its Subcontractor shall immediately discharge such person from Work and the discharged person shall not be re-employed on the Work except with consent of City.

10.6. Contractor to Supply Sufficient Workers and Materials

A. Unless otherwise required by City under the terms of Contract Documents, Contractor shall at all times keep on the Site materials and employ qualified workers sufficient to prosecute Work at a rate and in a sequence and manner necessary to complete Work within the Contract Time. This obligation shall remain in full force and effect notwithstanding disputes or claims of any type.

B. At any time during progress of Work should Contractor directly or indirectly (through Subcontractors) refuse, neglect, or be unable to supply sufficient materials or employ qualified workers to prosecute the Work as required, then City may require Contractor to accelerate the Work and/or furnish additional qualified workers or materials as City may consider necessary, at no cost to City. If Contractor does not comply with the notice within three Business Days of date of service thereof, City shall have the right (but not a duty) to provide materials and qualified workers to finish the Work or any affected portion of Work, as City may elect. City may, at its discretion, exclude Contractor from the Site, or portions of the Site or separate work elements during the time period that City exercises this right. City will deduct from moneys due or which may thereafter become due under the Contract Documents, the sums necessary to meet expenses thereby incurred and paid to persons supplying materials and doing Work. City will deduct from funds or appropriations set aside for purposes of Contract Documents the amount of such payments and charge them to Contractor as if paid to Contractor. Contractor shall remain liable for resulting delay, including liquidated damages and indemnification of City from claims of others.

C. Exercise by City of the rights conferred upon City in paragraph 10.6.B of this Document 00700, is entirely discretionary on the part of City. City shall have no duty or obligation to exercise the rights referred to in paragraph 10.6.B of this Document 00700 and its failure to exercise such rights shall not be deemed an approval of existing Work progress or a waiver or limitation of City's right to exercise such rights in other concurrent or future similar circumstances. The rights conferred upon City under paragraph 10.6.B of this Document 00700 are cumulative to City's other rights under any provision of the Contract Documents.

10.7. Contractor to List Trades Working

Contractor shall, on a daily basis, list the number of workers by trade, equipment, and description of the work actually performed, and provide a copy of that list to the City.

10.8. Contractor's Use of the Site

Contractor shall not make any arrangements with any person to permit occupancy or use of any land, structure or building within the limits of the Work, for any purpose whatsoever, either with or without compensation, in conflict with any agreement between City and any owner, former owner or tenant of such land, structure or buildings. Contractor may not occupy City-owned property outside the limit of the Work as indicated on the Drawings/Plans unless it obtains prior approval from City.

11. PROSECUTION AND PROGRESS OF THE WORK

11.1. Schedules and Examinations of Contract Documents

A. Contractor shall submit schedules and reports, Shop Drawings and Submittals in the appropriate quantity and within the required time, arrange conferences and meetings and proceed with the Work in accordance with Contract Documents, including Sections 01315, Project Meetings, 01320, Progress Schedules and Reports, and 01330, Submittal Procedures.

B. Contractor shall submit the following documents to the City for review and discussion at the Preconstruction Conference described in Section 01315, Project Meetings, if one is held, or within 14 Days after the Notice of Award is issued, whichever occurs first:

1. Progress schedules and reports as required by Sections 01320, Progress Schedules and Reports, and 01330, Submittal Procedures. Contractor shall utilize Progress Schedule in planning, scheduling, coordinating, performing and controlling Work (including all activities of Subcontractors, assigned contractors, equipment vendors and suppliers). Contractor shall update Progress Schedule on a monthly basis to depict accurately the actual progress of Work and for evaluating and preparing Contractor's monthly progress payments. Contractor's failure to submit and maintain an acceptable progress schedule may, in City's discretion, and without limiting the materiality of Contractor's other obligations under the Contract Documents, constitute grounds to declare Contractor in material breach of the Contract Documents

2. A preliminary schedule of Shop Drawing and Sample submittals that shall list each required submittal and the times for submitting, reviewing and processing such submittal, as required by Section 01330, Submittal Procedures. If no such schedule is agreed upon, then all Shop Drawings, Samples and product data submittals shall be completed and submitted within 21 Days after receipt of Notice of Award from City.

3. A preliminary Schedule of Values for all the Work which shall include quantities and prices of items aggregating the Contract Sum and shall subdivide each Schedule of Values into component activities in sufficient detail to serve as the basis for progress payments during construction. Such Schedule of Values shall include an appropriate amount of overhead and profit applicable to each item of Work, a line item for Project Record Documents, and a line item for Project scheduling, and shall conform to Section 01200, Measurement and Payment.

C. Unless otherwise provided in the Contract Documents, at least 15 Days before submission of the first application for payment, a conference attended by Contractor, City, and others as appropriate, will be held to review for acceptability the schedules submitted in accordance with paragraph 11.1.B of this Document 00700. Contractor shall have an additional seven Days to make corrections and adjustments and to complete and resubmit the schedules. Schedules shall be updated and completed as required by Sections 01200, Measurement and Payment, 01320, Progress Schedules and Reports, and 01330, Submittal Procedures. No progress payment shall be due or owing to Contractor until the schedules are submitted to and acceptable to City and/or Engineer as meeting the requirements of the Contract Documents, including Sections 01200, Measurement and Payment, 01320, Progress Schedules and Reports, and 01330, Submittal Procedures. City's acceptance of Contractor's schedules will not create any duty of care or impose on City any responsibility for the sequencing, scheduling or progress of Work nor will it interfere with or relieve Contractor from Contractor's full responsibility therefore.

D. Before commencing any portion of Work, Contractor shall inform City in writing as to time and place at which Contractor wishes to commence Work, and nature of Work to be done, in order that proper provision for inspection of Work may occur, and to assure measurements necessary for record and payment. Information shall be given to City a reasonable time in advance of time at which Contractor proposes to begin Work, so that City may complete necessary preliminary work without inconvenience or delay to Contractor.

E. Contractor shall submit submittals and Shop Drawings to City (or Engineer if City so designates) for review in strict accordance with Section 01330, Submittal Procedures. Submission of a Shop Drawing shall constitute Contractor's representation that all requirements of Section 01330, Submittal Procedures, have been complied with. All submittals will be identified as City may require and in the number of copies specified in Section 01330, Submittal Procedures.

F. Contractor shall not perform Work that requires submission of a Shop Drawing or Sample or other submittal prior to submission and favorable review of the Shop Drawing or Sample or submittal. Where a Shop Drawing or Sample or other submittal is required by Contract Documents or the final Schedule of Shop Drawing and Sample Submittals accepted by City, any related Work performed prior to City's approval of the pertinent submittal shall be at the sole expense, responsibility and risk of Contractor.

11.2. Cost Data

A. Contractor shall maintain full and correct information as to the number of workers employed in connection with each subdivision of Work, the classification and rate of pay of each worker in the form of certified payrolls, the cost to Contractor of each class of materials, tools, and appliances used by Contractor in the Work, and the amount of each class of materials used in each subdivision of Work. Contractor shall, upon City's request, produce copies of the certified payrolls. If Contractor maintains or is capable of generating summaries or reports comparing actual Project costs with Bid estimates or budgets, Contractor shall provide City with a copy of such report upon City's request and whenever it is generated. Any and all information provided to the City shall be at no cost to the City.

B. Contractor shall maintain daily job reports recording all significant activity on the job, including the number of workers on Site, Work activities, problems encountered and delays. Contractor shall provide City with copies for each Day Contractor works on the Project, to be delivered to City either the same Day or the following morning before starting work at the Site. Contractor shall take monthly progress photographs of all areas of the Work. Contractor shall maintain copies of all correspondence with Subcontractors and records of meetings with Subcontractors.

C. City shall have the right to audit and copy Contractor's books and records of any type, nature or description relating to the Project (including but not limited to financial records reflecting in any way costs claimed on the Project), and to inspect the Site, including Contractor's trailer, or other job Site office, and this requirement shall be contained in the subcontracts of Subcontractors working on Site. By way of example, City shall have the right to inspect and obtain copies of all Contract Documents, planning and design documents, Bid proposal and negotiation documents (subject to Document 00670, Escrow Bid Documents), cost records and job cost variance reports, design modification proposals, value engineering or other cost reduction proposals, revisions made to the original design, job progress reports, photographs, and as-built drawings maintained by Contractor. City and any other applicable governmental entity shall have the right to inspect all information and documents maintained under this paragraph 11.2 at any time during the Project and for a period of five years following Substantial Completion. This right of inspection shall not relieve Contractor of its duties and obligations under the Contract Documents. This right of inspection shall be specifically enforceable in a court of law, either independently or in conjunction with enforcement of any other rights in the Contract Documents.

D. Contractor shall maintain in a safe place at the Site one record copy of all Drawings/Plans, Specifications, Addenda, Contract Modifications, Change Orders, Work Directives, Force Account orders, and written interpretations and clarifications in good order and annotated to show all changes made during construction. These Project Record Documents, together with all approved Samples and a counterpart of all approved Shop Drawings, shall be maintained and available to City for reference. Upon completion of the Work, Contractor shall deliver to City, the Project Record Documents, Samples and Shop Drawings and as-built drawings. All documents shall be neat, clear, readable, and organized in binders, or files with table of contents acceptable to the City.

12. CLAIMS BY CONTRACTOR

12.1. General

A. Contract Interpretation Disputes: Should it appear to Contractor that Work to be performed or any of the matters relative to Contract Documents (including without limitation Drawings/Plans or Specifications) are not satisfactorily detailed or explained therein, or should any questions arise as to the meaning or intent of Contract Documents (including without limitation Drawings/Plans or Specifications), Contractor shall give written notice to City. Contractor shall bear all costs incurred in giving notice. City will render a determination regarding the issue, which shall be final. If Contractor disagrees with City's decision, Contractor's sole and exclusive remedy is to file a claim in accordance with this Article 12. Contractor shall diligently prosecute the Disputed Work (as defined below) to Final Completion pending resolution of any claim.

B. Work Disputes: Contractor shall give written notice to City of any dispute arising under the Contract Documents respecting the true value of any Work performed, the implementation of Work required by Contract Documents, any Work omitted, any extra Work that Contractor may be required to perform or time extensions, respecting the size of any payment to Contractor during the performance of Contract Documents, or of compliance with Contract Documents procedures. City will render a determination regarding the issue, which shall be final. If Contractor disagrees with City's decision, Contractor's sole and exclusive remedy is to file a claim in accordance with this Article 12. Pending the resolution of any claim, Contractor shall diligently prosecute the Disputed Work to Final Completion.

C. The claim notice and documentation procedure described in this Article 12 applies to all claims and disputes arising under the Contract Documents, including without limitation any claim or dispute by any Subcontractor or material supplier. All Subcontractor and supplier claims of any type shall be brought only through Contractor as provided in this Article 12. Under no circumstances shall any Subcontractor or supplier make any direct claim against City.

D. "Claim" means a written demand or written assertion by Contractor seeking, as a matter of right, the payment of money, the adjustment or interpretation of Contract Documents terms, or other relief arising under or relating to Contract Documents. In order to qualify as a "claim," the written demand must state that it is a claim submitted under this Article 12.

E. A voucher, invoice, proposed change, Application for Payment, cost proposal, RFI, change order request, or other routine or authorized form of request for payment is not a claim under the Contract Documents. If such request is disputed as to liability or amount, then the disputed portion of the submission may be converted to a claim under the Contract Documents by submitting a separate claim in compliance with claim submission requirements.

F. The provisions of this Article 12 apply under the California Government Code, Title 1, Division 3.6, Part 3, Chapter 5 and survive termination, breach or completion of the Contract Documents. Contractor shall bear all costs incurred in the preparation and submission of a claim.

///

12.2. Procedure

A. Should any clarification, determination, action or inaction by City or Engineer, Work, or any other event, in the opinion of Contractor, exceed the requirements of or not comply with Contract Documents, or otherwise result in Contractor seeking additional compensation in time or money or damages for any reason (collectively "Disputed Work"), then Contractor and City will make good faith attempts to resolve informally any and all such issues, claims and/or disputes. Before commencing the Disputed Work, or within seven Days after Contractor's first knowledge of the Disputed Work, whichever is earlier, Contractor shall file a written notice and cost proposal for the Disputed Work with City stating clearly and in detail its objection and reasons for contending the Work or interpretation is outside the requirements of Contract Documents. If a written notice and cost proposal for Disputed Work is not issued within this time period, or if Contractor proceeds with the Disputed Work without first having given the notice required by this paragraph 12.2.A, Contractor shall waive its rights to further claim on the specific issue.

B. City will review Contractor's timely notice and cost proposal for Disputed Work and provide a decision. If, after receiving the decision, Contractor disagrees with it or still considers the Work required of it to be outside of the requirements of Contract Documents, it shall so notify City, in writing, within seven Days after receiving the decision, by submitting a notice of potential claim, stating that a formal claim will be issued. Within 30 Days of receiving the decision, Contractor shall submit its claim in the form specified herein and all arguments, justification, cost or estimates, schedule analysis, and detailed documentation supporting its position. Contractor's failure to furnish notification within seven Days and all justifying documentation within 30 Days will result in Contractor waiving its right to the subject claim. If Disputed Work persists longer than 30 Days, then Contractor shall, every 30 Days until the Disputed Work ceases, submit to City a document titled "Claim Update" that shall update and quantify all elements of the claim as completely as possible. Contractor's failure to submit a Claim Update or to quantify costs every 30 Days shall result in waiver of the claim for that 30-Day period. Claims or Claim Updates stating that damages, total damages (direct and indirect), schedule input and/or any time extension will be determined at a later date shall not comply with this paragraph 12.2.B and shall result in Contractor waiving its claim(s).

C. Upon receipt of Contractor's formal claim including all arguments, justifications, cost or estimates, schedule analysis, and documentation supporting its position as previously stipulated, City or its designee will review the issue and render a final determination. If Contractor's claims submitted in accordance with this Article 12 at Project completion total less than $375,000, then claims resolution shall proceed in the manner prescribed by Article 1.5, Chapter 1, Part 3 of Division 2 of the California Public Contract Code.

D. Claims shall be calculated in the same manner as Change Orders per Section 01250, Modification Procedures. EXCEPT WHERE PROVIDED BY LAW, OR ELSEWHERE IN THESE CONTRACT DOCUMENTS (IF APPLICABLE), CITY SHALL NOT BE LIABLE FOR SPECIAL OR CONSEQUENTIAL DAMAGES, AND CONTRACTOR SHALL NOT INCLUDE THEM IN ITS CLAIMS. CONTRACTOR SHALL BE LIMITED IN ITS RECOVERY ON CLAIMS TO THE CHANGE ORDER CALCULATIONS SET FORTH IN SECTION 01250, MODIFICATION PROCEDURES.

12.3. Claim Format

A. Contractor shall submit the claim justification in the following format:

1. Cover letter and certification;
2. Summary of claim, including underlying facts, entitlement, schedule analysis, quantum calculations, contract provisions supporting relief;
3. List of documents relating to claim including Specifications, Drawings/Plans clarifications/requests for information, schedules, notices of delay, cost calculations and any others;
4. Chronology of events and correspondence;
5. Analysis of claim merit;
6. Analysis of claim cost; and
7. Attach supporting documents referenced in paragraph 12.3.A.3.

12.4. Exclusive Remedy

Contractor's performance of its duties and obligations specified in this Article 12 and submission of a claim as provided in this Article 12 is Contractor's sole and exclusive remedy for disputes of all types pertaining to the payment of money, extension of time, the adjustment or interpretation of Contract Documents terms or other contractual or tort relief arising from Contract Documents. This exclusive remedy and the limitation of liability (expressed herein and elsewhere throughout Contract Documents) apply notwithstanding the completion, termination, suspension, cancellation, breach or rescission of the Work or Contract Documents, negligence or strict liability by City, its representatives, consultants or agents, or the transfer of Work or the Project to City for any reason whatsoever. Contractor waives all claims of waiver, estoppel, release, bar, or any other type of excuse for non-compliance with the claim submission requirements. Compliance with the notice and claim submission procedures described in Article 12 is a condition precedent to the right to commence litigation, file a Government Code Claim, or commence any other legal action. Claim(s) or issue(s) not raised in a timely protest and timely claim submitted under this Article 12 may not be asserted in any Government Code Claim, subsequent litigation, or legal action. City shall not have deemed to waive any provision under this Article 12, if at City's sole discretion, a claim is accepted in a manner not in accord with this Article 12.

12.5. Mediation

All Contractor claims not subject to the claim resolution procedures set forth in Section 01410, Regulatory Requirements, shall, as a condition precedent to litigation (or if otherwise permitted by the Contract Documents, arbitration) thereon, first be mediated. Mediation shall be non-binding and utilize the services of a mediator mutually acceptable to the parties and, if the parties cannot agree, a mediator selected by the American Arbitration Association from its panel of approved mediators trained in construction industry mediation. All statutes of limitation shall be tolled from the date of the demand for mediation until a date two weeks following the mediation's conclusion. All unresolved Contractor claims shall be submitted to the same mediator. The cost of mediation shall be equally shared.

///

///

12.6. Subcontractor Claims

Contractor shall present as its claims all Subcontractor, sub-Subcontractor and supplier claims of any type, and prove them under the terms of the Contract Documents. City shall not be directly liable to any Subcontractor, any supplier, or any other person or organization, or to any surety for or employee or agent of any of them, for damages or extra costs of any type arising out of or resulting from the Project.

13. LEGAL AND MISCELLANEOUS

13.1. Laws and Regulations

A. Contractor shall keep fully informed of and shall comply with all laws, ordinances, regulations and orders of any properly constituted authority affecting the Contract Documents, Work and persons connected with Work, and shall protect and indemnify City and its officers, employees, consultants and agents against any claim or liability, including attorney's fees, arising from or based on violation of law, ordinance, regulation or order, whether by Contractor or by Subcontractors, employees or agents. Authorized persons may at any time enter upon any part of Work to ascertain compliance of all applicable laws, ordinances, regulations and orders.

B. Whenever Drawings/Plans and Specifications require larger sizes or higher standards than are required by any applicable law, ordinance, regulation or order, Drawings/Plans and Specifications shall govern. Whenever Drawings/Plans and Specifications require something that will violate such laws, ordinances, regulations or orders, then such laws, ordinances, regulations or orders shall govern.

13.2. Permits and Taxes

Contractor shall procure all permits and licenses applicable to the Work (including environmental matters to the extent applicable), pay all charges and fees, including fees for encroachment permits, comply with, implement and acknowledge effectiveness of all permits, initiate and cooperate in securing all required notifications or approvals therefore, and give all notices necessary and incident to due and lawful prosecution of the Work, unless otherwise provided herein. City will pay applicable building permits, school, sanitary sewer, electric, and water development fees, except as otherwise provided in the Contract Documents. Contractor shall pay all sales and/or use taxes levied on materials, supplies, or equipment purchased and used on or incorporated into Work, and all other taxes properly assessed against equipment or other property used in connection with the Work, without any increase in the Contract Sum. Contractor shall make necessary arrangements with proper authorities having jurisdiction over roads, streets, pipelines, navigable waterways, railroads, and other works in advance of operations, even where City may have already obtained permits for the Work.

///

///

///

13.3. Responsibility of Contractor and Indemnification

A. City and each of its officers, employees, consultants and agents including, but not limited to the City Council, Engineer and each City's Representative, shall not be liable or accountable in any manner for loss or damage that may happen to any part of the Work; loss or damage to materials or other things used or employed in performing the Work; injury, sickness, disease, or death of any person; or damage to property resulting from any cause whatsoever except their sole negligence, willful misconduct or active negligence, attributable to performance or character of the Work, and Contractor releases all of the foregoing persons and entities from any and all such claims.

B. To the furthest extent permitted by law (including without limitation California Civil Code Section 2782), Contractor shall assume defense of, and indemnify and hold harmless, City and each of its officers, employees, consultants (including without limitation Consulting Engineer) and agents, including but not limited to the City Council, Engineer and each City's Representative, from claims, suits, actions, losses and liability of every kind, nature and description, including but not limited to claims and fines of regulatory agencies and attorney's fees and consultant's fees, directly or indirectly arising out of, connected with or resulting from performance of the Work, failure to perform the Work, or condition of the Work which is caused in whole or part by any act or omission of Contractor, Subcontractors, anyone directly or indirectly employed by any of them or anyone for whose acts any of them may be liable, regardless of whether it is caused in part by the negligence of City or by any person or entity required to be indemnified hereunder.

C. With respect to third-party claims against Contractor, Contractor waives any and all rights to any type of express or implied indemnity against City and each of its officers, employees, consultants and agents including, but not limited to City, the City Council, Engineer and each City's Representative.

D. Approval or purchase of any insurance contracts or policies shall in no way relieve from liability nor limit the liability of Contractor, its Subcontractors of any tier, or the officers or agents of any of them.

E. To the furthest extent permitted by law (including, without limitation, Civil Code Section 2782), the indemnities, releases of liability and limitations of liability, claims procedures, and limitations of remedy expressed throughout Contract Documents shall apply even in the event of breach of contract, negligence (active or passive), fault or strict liability of the party(ies) indemnified, released, or limited in liability, and shall survive the termination, rescission, breach, abandonment, or completion of the Work or the terms of the Contract Documents. If Contractor fails to perform any of these defense or indemnity obligations, City may in its discretion back charge Contractor for City's costs and damages resulting therefrom and withhold such sums from progress payments or other contract moneys which may become due.

F. The indemnities in the Contract Documents shall not apply to any indemnified party to the extent of its sole negligence or willful misconduct; nor shall they apply to City or other indemnified party to the extent of its active negligence.

13.4. Concealed or Unknown Conditions

A. If either of the following conditions is encountered at Site when digging trenches or other excavations that extend deeper than four feet below the surface, Contractor shall give a written Notice of Differing Site Conditions to City promptly before conditions are disturbed, except in an emergency as required by paragraph 16.5 of this Document 00700, and in no event later than seven Days after first observance of:

1. Subsurface or Latent physical conditions which differ materially from those indicated in the Contract Documents; or

2. Unknown physical conditions of an unusual nature or which differ materially from those ordinarily encountered and generally recognized as inherent in work of the character provided for in the Contract Documents.

In response to Contractor's Notice of Differing Site Conditions under this paragraph 13.4.A, City will investigate the identified conditions, and if they differ materially and cause increase or decrease in Contractor's cost of, or time required for, performance of any part of the Work, City will issue either a Request for Proposal or a Construction Change Directive under the procedures described in the Contract Documents, including without limitation Section 01250, Modification Procedures. If City determines that physical conditions at the Site are not Latent or are not materially different from those indicated in Contract Documents or that no change in terms of the Contract Documents is justified, City will so notify Contractor in writing, stating reasons

B. Contractor shall not be entitled to any adjustment in the Contract Sum or Contract Time regarding claimed Latent or materially different Site conditions (whether above or below grade) if:

1. Contractor knew of the existence of such conditions at the time Contractor submitted its Bid; or

2. Contractor should have known of the existence of such conditions as a result of having complied with the requirements of Contract Documents, including without limitation paragraphs 2.1 and 8.4 of this Document 00700; or

3. The information or conditions claimed by Contractor to be Latent or materially different consist of information, conclusions, opinions or deductions of the kind that paragraph 2.1 of this Document 00700 precludes reliance upon; or

4. Contractor was required to give written Notice of Differing Site Conditions and failed to do so within the time required.

C. If City and Contractor are unable to agree on entitlement to or as to the amount or length of any adjustment in the Contract Sum or Contract Time required under this paragraph 13.4, Contractor shall proceed with the Work as directed by City and may make a claim as provided in Article 12 of this Document 00700.

13.5. Notice of Hazardous Waste or Materials Conditions

A. Contractor shall give a written Notice of Hazardous Materials Condition to City promptly, before any of the following conditions are disturbed (except in an emergency as required by paragraph 16.5 of this Document 00700), and in no event later than 24 hours after first observance of any:

1. Material that Contractor believes may be hazardous waste or hazardous material, as defined in Section 25117 of the Health and Safety Code (including, without limitation, asbestos, lead, PCBs, petroleum and related hydrocarbons, and radioactive material) that is required to be removed to a Class I, Class II, or Class III disposal site in accordance with provisions of existing law ("hazardous material"); or

2. Other material that may present an imminent substantial danger to persons or property exposed thereto in connection with Work at the Site ("other materials").

B. Except as otherwise provided in the Contract Documents or as provided by applicable law, Contractor shall not be required to give any notice for the disturbance or observation of any such hazardous materials or other materials where such matter is disturbed or observed as part of the scope of Work under the Contract Documents (such as hazardous waste or hazardous material investigation, remediation or disposal activities which are identified as the subject of Work under the Contract Documents), where Contractor complies with all requirements in the Contract Documents and applicable law respecting such materials.

C. Contractor's Notice of Hazardous Materials Condition shall indicate whether the hazardous materials or other materials were shown or indicated in the Contract Documents to be within the scope of Work, and whether the hazardous materials or other materials were brought to the Site by Contractor, its Subcontractors, suppliers, or anyone else for whom Contractor is responsible.

D. Contractor shall not be entitled to any adjustment in the Contract Sum or Contract Time regarding claimed hazardous waste or materials if:

1. Contractor knew of the existence of such hazardous materials or other materials at the time Contractor submitted its Bid; or

2. Contractor should have known of the existence of such hazardous material or other materials as a result of its having the responsibility to obtain additional or supplementary examinations, investigation, explorations, tests, studies, and data concerning the conditions at or contiguous to the Site prior to submitting its Bid; or

3. Contractor failed to give the written notice within the time required by paragraph 13.5.A of this Document 00700.

///

///

E. If City determines that conditions involve hazardous materials or other materials and that a change in Contract Document terms is justified, City will issue either a Request for Proposal or Construction Change Directive under the procedures described in the Contract Documents, including without limitation Section 01250, Modification Procedures. If City determines that conditions do not involve hazardous materials or other materials or that no change in Contract Document terms is justified, City will notify Contractor in writing, stating the reasons for its determination.

F. If City and Contractor are unable to agree on entitlement to or as to the amount or length of any adjustment in the Contract Sum or Contract Time required under this paragraph 13.5, Contractor shall proceed with the Work as directed by City and may make a claim as provided in Article 12 of this Document 00700.

G. In addition to the parties' other rights under paragraph 13.5.E of this Document 00700, if Contractor does not agree to resume Work based on a reasonable belief that it is unsafe, or does not agree to resume Work under special conditions, City may order the disputed portion of Work deleted from the Work, or performed by others, or City may invoke its right to terminate Contractor's right to proceed under the Contract Documents in whole or in part, for convenience or for cause as the facts may warrant. If Contractor does not agree with City's determination of any adjustment in the Contract Sum or Contract Time as a result, Contractor may make a claim as provided in Article 12 of this Document 00700.

13.6. Suspension of Work

A. City may, without cause, order Contractor in writing to suspend, delay or interrupt Work in whole or in part for such period of time as City may determine. An adjustment shall be made for increases in cost of performance of Work of the Contract Documents caused by any such suspension, delay or interruption, calculated using the measures set forth in Section 01250, Modification Procedures. No adjustment shall be made to extent that:

1. Performance is, was or would have been so suspended, delayed or interrupted by another cause for which Contractor is responsible; or

2. An equitable adjustment is made or denied under any other provision of Contract Documents; or

3. The suspension of Work was the direct or indirect result of Contractor's failure to perform any of its obligations hereunder. Adjustments made in cost of performance may have a mutually agreed fixed or percentage fee; if the parties cannot agree, Contractor may file a claim under Article 12 of this Document 00700.

///

///

///

///

///

13.7. Termination of Contract for Cause

A. City may declare Contractor in default of Contract Documents and City may terminate Contractor's right to proceed under the Contract Documents for cause:

1. Should Contractor make an assignment for the benefit of creditors; admit in writing its inability to pay its debts as they become due; file a voluntary petition in bankruptcy; be adjudged a bankrupt or insolvent; be the subject of an involuntary petition in bankruptcy which is not dismissed within 60 Days; file a petition or answer seeking for itself any reorganization, arrangement, composition, readjustment, liquidation, dissolution, or similar relief under any present or future statute, law, or regulation; file any answer admitting or not contesting the material allegations of a petition filed against Contractor in any such proceeding; or seek, consent to, or acquiesce in, the appointment of any trustee, receiver, custodian or liquidator of Contractor or of all or any substantial part of its properties or if Contractor, its directors or shareholders, take action to dissolve or liquidate Contractor; or

2. Should Contractor commit a material breach of the Contract Documents; If City declares Contractor in default due to material breach, however, City must allow Contractor an opportunity to cure such breach within ten Days of the date of notice from City to Contractor providing notice of the default; or, if such breach is curable but not curable within such ten-Day period, within such period of time as is reasonably necessary to accomplish such cure. (In order for Contractor to avail itself of a time period in excess of ten Days, Contractor must provide City within the ten-Day period with a written plan acceptable to City to cure said breach which includes, for example, evidence of necessary resources, Subcontractor commitments, schedules and recovery schedules meeting Contract Document requirements and showing a realistic and achievable plan to cure the breach. Contractor must then diligently commence and continue such cure according to the written plan); or

3. Should Contractor violate or allow (by a Subcontractor or other person or entity for which Contractor is responsible) a violation of any valid law, statute, regulation, rule, ordinance, permit, license or order of any governmental agency applicable to the Project or Work and does not cure (or cause to be cured) such violation within ten Days of the date of the notice from City to Contractor demanding such cure; or, if such violation is curable but not curable within such ten-Day period, within such period of time as is reasonably necessary to accomplish such cure. (In order for Contractor to avail itself of a time period in excess of ten Days, Contractor shall provide City within the ten-Day period with a written plan to cure said violation acceptable to City, and then diligently commence and continue performance of such cure according to the written plan.)

///

///

///

B. If City at any time reasonably believes that Contractor is or may be in default under the Contract Documents as provided in paragraph 13.7.A of this Document 00700, City may in its sole discretion notify Contractor of this fact and request written assurances from Contractor of performance of Contract Documents and a written plan from Contractor to remedy any default under the terms of Contract Documents which City may advise Contractor of in writing. Contractor shall, within 10 Days of City's request, deliver a written cure plan which meets the requirements of the written plan deliverable under paragraph 13.7.A.2 of this Document 00700. Failure of Contractor to provide such written assurances of performance and the required written plan, within ten Days of request, will constitute a material breach of Contract Documents sufficient to justify termination for cause.

C. In event of termination for cause, City will immediately serve written notice thereof upon Surety and Contractor. Surety shall have the rights and obligations set forth in Document 00610, Construction Performance Bond. Subject to the Surety's rights under the Performance Bond (which rights are waived upon a default thereunder), City may take over the Work and prosecute it to completion by contract or by any other methods it may deem advisable.

D. In the event of termination by City as provided in paragraph 13.7.A of this Document 00700 for cause:

1. City will compensate Contractor for the value of the Work delivered to City upon termination as determined in accordance with the Contract Documents, subject to all rights of offset and back charges, and provided that Contractor provides City with updated as-builts and Project Record Documents showing the Work performed up to the date of termination. However, City will not compensate Contractor for its costs in terminating the Work or any cancellation charges owed to third parties.

2. Contractor shall deliver to City possession of the Work in its then condition including, but not limited to, all designs, engineering, Project records, Project Record Documents, cost data of all types, Drawings/Plans and Specifications and contracts with vendors and Subcontractors, all other documentation associated with the Project, and all construction supplies and aids dedicated solely to performing the Work which, in the normal course of construction, would be consumed or only have salvage value at the end of the construction period. Contractor shall remain fully liable for the failure of any Work completed and materials and equipment provided through the date of such termination to comply with the provisions of the Contract Documents. The provisions of this paragraph 13.7.D shall not be interpreted to diminish any right which City may have to claim and recover damages for any breach of Contract Documents or otherwise, but rather, Contractor shall compensate City for all loss, cost, damage, expense, and/or liability suffered by City as a result of such termination and failure to comply with Contract Documents.

3. City's rights under paragraph 13.7.D.2 shall be specifically enforceable to the greatest extent permitted by law. City shall, to the extent applicable, have all other rights and remedies set forth in any Bidding Document.

E. City may terminate portions or parts of the Work for cause, provided these portions or parts (1) have separate geographic areas from parts or portions of the Work not terminated or (2) are limited to the work of one or more specific trades or Subcontractors. In such case, Contractor shall cooperate with a completing contractor as required under Article 6 of this Document 00700.

F. In the event a termination for cause is later determined to have been made wrongfully or without cause, then the termination shall be treated as a termination for convenience, and Contractor shall have the recovery rights specified in paragraph 13.8. Any Contractor claim arising out of a termination for cause, however, shall be made in accordance with Article 12 of this Document 00700. No other loss cost, damage, expense or liability may be claimed, requested or recovered by Contractor.

13.8. Termination of Contract for Convenience

A. City may terminate performance of the Work under the Contract Documents in accordance with this clause in whole, or from time to time in part, whenever City shall determine that termination is in City's best interest. Termination shall be effected by City delivering to Contractor notice of termination specifying the extent to which performance of the Work under the Contract Documents is terminated and the effective date of the termination.

B. After receiving a notice of termination under paragraph 13.8.A of this Document 00700, and except as otherwise directed by City, Contractor shall:

1. Stop Work under the Contract Documents on date and to extent specified in notice of termination;

2. Place no further orders or subcontracts for materials, services, or facilities except as necessary to complete portion of Work under the Contract Documents which is not terminated;

3. Terminate all orders and subcontracts to extent that they relate to performance of Work terminated by the notice of termination;

4. Assign to City in manner, at times, and to extent directed by City, all right, title, and interest of Contractor under orders and subcontracts so terminated. City shall have the right, in its sole discretion, to settle or pay any or all claims arising out of termination of orders and subcontracts;

5. Settle all outstanding liabilities and all claims arising out of such termination of orders and subcontracts, with approval or ratification of City to extent City may require. City's approval or ratification shall be final for purposes of this paragraph 13.8;

6. Transfer title to City, and deliver in the manner, at the times, and to the extent, if any, directed by City, all fabricated or unfabricated parts, Work in process, completed Work, supplies, and all other material produced as part of, or acquired in connection with performance of, Work terminated by the notice of termination, and completed or partially completed drawings, drawings, specifications, information, and other property which, if the Project had been completed, would have been required to be furnished to City;

7. Use its best efforts to sell, in manner, at times, to extent, and at price or prices that City directs or authorizes, any property of types referred to in paragraph 13.8.B.6 of this Document 00700, but Contractor shall not be required to extend credit to any purchaser, and may acquire any such property under conditions prescribed and at price or prices approved by City. Proceeds of transfer or disposition shall be applied to reduce payments to be made by City to Contractor under the Contract Documents or shall otherwise be credited to the price or cost of Work covered by Contract Documents or paid in such other manner as City may direct;

8. Complete performance of the part of the Work which was not terminated by the notice of termination; and

9. Take such action as may be necessary, or as City may direct, to protect and preserve all property related to Contract Documents which is in Contractor's possession and in which City has or may acquire interest.

C. After receipt of a notice of termination under paragraph 13.8A of this Document 00700, Contractor shall submit to City its termination claim, in form and with all certifications required by Article 12 of this Document 00700. Contractor's termination claim shall be submitted promptly, but in no event later than 6 months from effective date of the termination. Contractor and City may agree upon the whole or part of the amount or amounts to be paid to Contractor because of a total or partial termination of Work under this paragraph 13.8. If Contractor and City fail to agree on the whole amount to be paid to Contractor because of the termination of the Work under this paragraph 13.8, City's total liability to Contractor by reason of the termination shall be the total (without duplication of any items) of:

1. The reasonable cost to Contractor, without profit, for all Work performed prior to the effective date of the termination, including Work done to secure the Project for termination. Reasonable cost may not exceed the applicable percentage completion values derived from the progress schedule and the schedule of values. Deductions shall be made for cost of materials to be retained by Contractor, cost of Work defectively performed, amounts realized by sale of materials, and for other appropriate credits against cost of Work. Reasonable cost will include reasonable allowance for Project overhead and general administrative overhead not to exceed a total of ten percent of direct costs of such Work. When, in City's opinion, the cost of any item of Work is excessively high due to costs incurred to remedy or replace defective or rejected Work, reasonable cost to be allowed will be the estimated reasonable cost of performing the Work in compliance with requirements of Contract Documents and excessive actual cost shall be disallowed.

2. A reasonable allowance for profit on cost of Work performed as determined under paragraph 13.8.C.1 of this Document 00700, provided that Contractor establishes to City's satisfaction that Contractor would have made a profit had the Project been completed, and provided further that the profit allowed shall not exceed 5 percent of cost.

3. Reasonable costs to Contractor of handling material returned to vendors, delivered to City or otherwise disposed of as directed by City.

4. A reasonable allowance for Contractor's internal administrative costs in preparing termination claim.

5. Except as provided in this paragraph 13.8.C of this Document 00700, City shall not be liable for costs incurred by Contractor or Subcontractors after receipt of a notice of termination. Such non-recoverable costs include, but are not limited to, anticipated profits on Work not performed as of the date of termination, post-termination employee salaries, post-termination general administrative expenses, post-termination overhead or unabsorbed overhead, costs of preparing and submitting Contractor's Bid, attorney's fees of any type, and all costs relating to prosecution of claim or lawsuit.

6. City shall have no obligation to pay Contractor under this paragraph 13.8 unless and until Contractor provides City with updated and acceptable as-builts and Project Record Documents for Work completed prior to termination.

D. In arriving at the amount due Contractor under this clause, there shall be deducted in whole (or in the appropriate part[s] if the termination is partial):

1. All unliquidated advances or other payments on account previously made to Contractor, including without limitation all payments applicable to the terminated portion of Contract Documents;

2. Any claim which City may have against Contractor in connection with Contract Documents; and

3. The agreed price for, or proceeds of sale of, any materials, supplies, or other things kept by Contractor or sold under provisions of this paragraph 13.8, and not otherwise recovered by or credited to City.

13.9. Contingent Assignment of Subcontracts

A. Contractor hereby assigns to City each Subcontract for a portion of the Work, provided that:

1. The assignment is effective only after City's termination of Contractor's right to proceed under the Contract Documents (or portion thereof relating to that Subcontract) pursuant to paragraphs 13.7 or 13.8 of this Document 00700.

2. The Assignment is effective only for the Subcontracts which City expressly accepts by notifying the Subcontractor in writing;

3. The assignment is subject to the prior rights, if any, of the Surety, obligated by Document 00610, Construction Performance Bond, provided under the Contract Documents, where the Surety exercises its rights to complete the Contract;

4. After the effectiveness of an assignment, Contractor shall, at its sole cost and expense (except as otherwise provided in paragraphs 13.7 or 13.8 of this Document 00700), sign all instruments and take all actions reasonably requested by City to evidence and confirm the effectiveness of the assignment in City; and

5. Nothing in this paragraph 13.9 shall modify or limit any of Contractor's obligations to City arising from acts or omissions occurring before the effectiveness of any Subcontract assignment, including but not limited to all defense, indemnity and hold-harmless obligations arising from or related to the assigned Subcontract.

13.10. Remedies and Contract Integration

A. Subject to Contract Documents provisions regarding Contractor claims, claim review, and claim resolution, and subject to the limitations therein, the exclusive jurisdiction and venue for resolving all claims, counter-claims, disputes and other matters in question between City and Contractor arising out of or relating to Contract Documents, any breach thereof or the Project shall be the applicable court of competent jurisdiction located in the State of California, County of Santa Clara. All City remedies provided in the Contract Documents shall be taken and construed as cumulative and not exclusive; that is, in addition to each and every other remedy herein provided; and in all instances City shall have any and all other equitable and legal rights and remedies which it would have according to law.

B. The Contract Documents, any Contract Modifications and Change Orders shall represent the entire and integrated agreement between City and Contractor regarding the subject matters hereof and thereof and shall constitute the exclusive statement of the terms of the parties' agreement. The Contract Documents, and any Contract Modifications and Change Orders, shall supersede any and all prior negotiations, representations or agreements, written or oral, express or implied, that relate in any way to the subject matter of the Contract Documents or written modifications. City and Contractor represent and agree that, except as otherwise expressly provided in the Contract Documents, they are entering into the Contract Documents and any subsequent written modification in sole reliance upon the information set forth or referenced in the Contract Documents or Contract Modifications and the parties are not and will not rely on any other information.

C. In any proceeding to enforce the Contract Documents, Contractor and City agree that the finder of fact shall receive detailed instructions on the meaning and operation of the Contract Documents, including their conditions, limitations of liability and remedies clauses, claims procedures and any other provisions impacting major defenses and theories of liability of the parties. Detailed findings of fact shall be requested, to verify Contract enforcement.

D. Either party's waiver of any breach or failure to enforce any of the terms, covenants, conditions or other provisions of the Contract Documents at any time shall not in any way affect, limit, modify or waive that party's right thereafter to enforce or compel strict compliance with every term, covenant, condition or other provision hereof, any course of dealing or custom of the trade or oral representations notwithstanding.

///

///

///

13.11. Patents

Fees or claims for any patented invention, article or arrangement that may be used upon or in any manner connected with performance of the Work or any part thereof shall be included in the Bid price for doing the Work. Contractor shall defend, indemnify and hold harmless City and each of its officers, employees, consultants (including without limitation Consulting Engineer) and agents, including, but not limited to, the Board and each City's Representative, from all damages, claims for damages, costs or expenses in law or equity, including attorney's fees, arising from or relating to any claim that any article supplied or to be supplied under the Contract Documents infringes on the patent rights, copyright, trade name, trademark, service mark, trade secret or other intellectual property right of any person or persons or that the person or entity supplying the article does not have a lawful right to sell the same. Such costs or expenses for which Contractor agrees to indemnify and hold harmless the above indemnities include but are not limited to any and all license fees, whether such fees are agreed by any indemnitee or ordered by a court or administrative body of any competent jurisdiction.

13.12. Substitution for Patented and Specified Articles

Except as noted specifically in Specifications, whenever in Specifications, material or process is designated by patent or proprietary name or by name of manufacturer, such designation shall be deemed to be used for purpose of facilitating description of material and process desired, and shall be deemed to be followed by the words "or equal" and Contractor may offer any substitute material or process that Contractor considers equal in every respect to that so designated and if material or process offered by Contractor is, in opinion of City, equal in every respect to that so designated, its use will be approved. However, Contractor may utilize this right only by timely submitting Document 00660, Substitution Request Form, as provided in Document 00200, Instructions to Bidders. A substitution will be approved only if it is a true "equal" item in every aspect of its design and quality, including but not limited to its dimensions, weights, service requirements, durability, functioning, impact on contiguous construction elements, overall schedule and design.

13.13. Interest of Public Officers

No representative, officer, or employee of City, no member of the governing body of the locality in which the Project is situated, no member of the locality in which City was activated, and no other public official of such locality or localities who exercises any functions or responsibilities with respect to the Project, during the tenure of the official or for one year thereafter, shall, as principal, agent, attorney or otherwise, be directly or indirectly interested, in the Contract Documents or the proceeds thereof.

13.14. Limit of Liability

CITY, AND EACH OF ITS OFFICERS, BOARD MEMBERS, EMPLOYEES, CONSULTANTS (INCLUDING WITHOUT LIMITATION CONSULTING ENGINEER) AND AGENTS INCLUDING, BUT NOT LIMITED TO, ENGINEER EACH OTHER CITY REPRESENTATIVE SHALL HAVE NO LIABILITY TO CONTRACTOR FOR SPECIAL, CONSEQUENTIAL, OR INCIDENTAL DAMAGES, EXCEPT TO THE LIMITED EXTENT THAT THESE CONTRACT DOCUMENTS OR APPLICABLE PUBLIC CONTRACTING STATUTES MAY SPECIFY THEIR RECOVERY.

13.15. Severability

Any provisions or portions thereof of Contract Documents that are prohibited by, unlawful, or unenforceable under any applicable law of any jurisdiction shall as to such jurisdiction be ineffective without affecting other provisions or portions thereof in the Contract Documents.

14. MODIFICATIONS OF CONTRACT DOCUMENTS

14.1. Alterations, Modifications and Force Account Work

A. No modification or deviation from the Drawings/Plans and Specifications will be permitted except by written Contract Modification.

B. City may, without notice to the sureties, make alterations, deviations, additions to, or deletions from Contract Documents; increase or decrease the quantity of any item or portion of the Work; expand, contract or otherwise change the Contract Time; delete any item or portion of the Work; and require extra Work. Contractor shall perform such Work under applicable provisions of the Contract Documents, unless specifically provided otherwise at the time the change is ordered. In the case of any ordered extra Work, Owner reserves the right to furnish all or portions of associated labor, material, and equipment, which Contractor shall accept and use without payment for costs, markup, profit, or otherwise for such City-furnished labor, materials, and equipment.

C. Changes affecting the Contract Time or Contract Sum of the Work shall be set forth in a written Change Order that shall specify:

1. The Work performed in connection with the change to be made;

2. The amount of the adjustment of the Contract Sum, if any, and the basis for compensation for the Work ordered; and

3. The extent of the adjustment in the Contract Time, if any.

D. A Change Order will become effective when signed by City. If City exercises its right to decide disputed issues pertaining to changed Work as set forth in Articles 12 and 14 of this Document 00700, then the resulting Change Order shall be effective when signed by City, notwithstanding that Contractor has not signed it.

E. Changes not affecting the Contract Time or Contract Sum of the Work, in City's discretion, may be set forth in a written RFI-Reply executed by City. Execution of such an RFI-Reply constitutes Contractor's agreement to make the specified change without change to the Contract Sum or the Contract Time.

F. Changes or deviations from Contract Documents affecting the Contract Time or Contract Sum of the Work shall not be made without the authority of an effective Change Order or Construction Change Directive as provided in Section 01250, Modification Procedures, except in cases of emergency discussed in Article 16 of this Document 00700.

///

G. If changes ordered in design, workmanship or materials are of such a nature as to increase or decrease the cost of any part of the Work, the price fixed in the Contract Documents shall be increased or decreased by the amount that Contractor and City may agree upon as a reasonable and proper allowance for the cost increase or decrease. If an agreement cannot be reached, then City will reach a determination, which shall be final, subject to Contractor's rights under Article 12 of this Document 00700. In all cases Contractor shall perform the changed Work as directed by City subject to Contractor's rights under Article 12 of this Document 00700.

H. Contractor shall, upon City's request, permit inspection of the original unaltered Bid estimate, subcontract agreements, purchase orders relating to the change, and documents substantiating all costs associated with its cost proposal or claims arising from changes in the Work.

I. Changes in the Work made pursuant to this Article 14 and extensions of Contract Time necessary by reason thereof shall not in any way release the guarantees and warranties given by Contractor pursuant to provisions of the Contract Documents, nor shall such changes in the Work relieve or release the Sureties of bonds executed pursuant to said provisions. The Sureties, in executing such bonds, shall be deemed to have expressly agreed to any such change in the Work and to any extension of time made by reason thereof.

J. Procedures for Modifications of Contract Documents and for calculating the cost of extra Work are given in Section 01250, Modification Procedures. Regarding delay and impact costs of any nature, Contractor may not seek delay compensation for on-Site or off-Site costs based on formulas, e.g., "Eichlay" or other formula. Rather, Contractor shall prove actual costs resulting from such delays. If Contractor requests compensation for delay to the construction, then Contractor shall prove and document actual costs plus markup per the cost categories and procedures in Section 01250, Modification Procedures, in order to request, claim or prove compensation for delay.

K. Change Orders in excess of City's approved limit must be approved by the City Council and a performance bond rider covering the changed Work executed before proceeding with the changed Work. Contractor is charged with knowledge of City's approved Change Order limits and procedures in effect at the applicable time.

15. TIME ALLOWANCES

15.1. Time Allowances for Performance of Contract Documents

A. When Contractor and City have signed the Contract Documents, City may serve a Notice to Proceed upon Contractor to that effect, either by depositing notice in a post office or post office box regularly maintained by United States Postal Service in a pre-paid wrapper directed to Contractor at legal address or (at City's option) by delivery by other means at legal address.

B. The start date for Contract Time shall be as provided in paragraph 3.2 of this Document 00700, General Conditions. The total number of Days for completion of the Work under the Contract Documents shall be as provided in Document 00520, Agreement.

15.2. Change of Contract Time

A. The Contract Time may only be changed by Change Order or by Contract Modification, and all time limits stated in the Contract Documents are of the essence of Contract Documents.

B. The Contract Time will be adjusted in an amount equal to the time lost due to:

1. Changes in the Work ordered by City;

2. Acts or neglect by City, Engineer, any City's Representative, utility owners or other contractors performing other work, provided that Contractor has fully and completely performed its responsibilities under the Contract Documents; or

3. Fires, floods, epidemics, abnormal weather conditions beyond the parameters otherwise set forth in this paragraph 15.2, earthquakes, civil or labor disturbances, strikes or acts of God, provided damages resulting therefrom are not the result of Contractor's failure to protect the Work as required by Contract Documents.

C. The Contract Time shall not be extended for any cause identified in paragraph 15.2.B above, however, unless:

1. Contractor actually has been prevented from completing any part of the Work within the Contract Time due to delay that is beyond Contractor's control and due to reasons for which Contractor is not responsible (delays attributable to and within the control of a Subcontractor, or its subcontractors, or supplier shall be deemed to be delays within the control of Contractor);

2. A claim for delay is made as provided herein; and

3. Contractor submits a Time Impact Evaluation as required under Section 01320, Progress Schedules and Reports, that demonstrates actual delay to critical Work activities that actually delay the progress of the Work in the amount of time requested.

D. Where Contractor is prevented from completing any part of the Work within the Contract Time due to delay beyond the control of both City and Contractor (including, but not limited to, adverse weather of all types and acts of other contractors or utilities), an extension of Contract Time, in an amount equal to the time lost due to such delay (without compensation), shall be Contractor's sole and exclusive remedy for such delay.

E. Contractor must present as its claims, all subcontractor and supplier claims of any type, and prove them under the terms of the Contract Documents. City shall not be directly liable to any Subcontractor, any supplier, or any other person or organization, or to any surety for or employee or agent of any of them, for damages or extra costs of any type arising out of or resulting from the Project, including without limitation:

1. delays caused by or within the control of Contractor;

2. changes in the Work ordered by City or any City representative;

3. acts or neglect by City, Utility Owners or other Contractors performing other work;

4. fires, floods, abnormal weather conditions, earthquakes, civil or labor disturbances, strikes or acts of God;

5. other Contractors performing other work as contemplated by Paragraph 6 of this Document 00700; or

6. claimed deficiencies in Project design.

F. Delays due to abnormal or adverse weather conditions shall not be allowed for weather conditions, which fall within the parameters listed herein. Adverse weather delays may be allowed only if the number of workdays of adverse weather exceeds these parameters on a monthly basis and Contractor proves that adverse weather actually caused critical project delays. Contractor shall provide written notice of intent to claim an adverse weather day within one day of the adverse weather day occurring. Rain parameters are as follows, pro-rated in the individual month Contractor starts and finishes work:

> Rain Workdays: January, [6]; February, [6]; March, [5]; April, [3]; May, [1]; June, [0]; July, [0]; August, [0]; September, [0]; October, [2]; November, [4]; December, [6]. The Contractor shall anticipate a total of 33 workdays of abnormal/adverse weather for each complete year and include said workdays in accordance with these General Conditions and Section 01320, Progress Schedule and Reports. Any adverse weather days remaining shall be considered Project float.

In order to qualify as a rain day with respect to the foregoing parameters, daily rainfall must exceed 0.10 of an inch or more at the City of San Jose, California, station, as measured by the National Oceanic & Atmospheric Administration, and Contractor must prove that the rain actually caused critical project delay as set forth above and below.

G. Delays due to abnormal or adverse weather conditions shall not be a prima facie reason for an extension of Contract Times. Contractor shall make every effort to continue Work under prevailing conditions. Delays due to abnormal or adverse weather conditions will be allowed provided that Contractor can prove abnormal or adverse weather conditions at the Site prevented the Contractor from proceeding with seventy five percent (75%) of the schedule crew labor and equipment resources engaged on critical path activities identified on the accepted and most current Critical Path Method (CPM) progress schedule update at the time of the abnormal or adverse weather condition, and 75% o the crew did not work more than three (3) hours. Abnormal or adverse weather delays meeting the criteria in this paragraph are deemed beyond the control of both City and Contractor, and an extension of Contract Times (or milestones) due to such a delay shall be the Contractor's sole and exclusive remedy for such a delay.

H. Adverse weather delay shall be recognized for the actual period of time Contractor proves it was delayed by rain in accordance with the above parameters and requirements. For example, and not by way of limitation, if rain exceeding the specified parameters does not in fact delay Contractor's progress on the critical path, then no time extension shall be recognized; and conversely, if Contractor proves that rain exceeding the specified parameters causes delay to Contractor for a period longer than one day, then Contractor shall be entitled to a time extension equal to the actual period of such delay.

I. Contractor shall take reasonable steps to mitigate potential weather delays, such as dewatering the Site, providing access roads un-impacted by abnormal or adverse weather and covering work and material that could be affected adversely by weather. Failure to do so shall be cause for City to not grant a time extension due to abnormal or adverse weather, where Contractor could have avoided or mitigated the potential delay by exercising reasonable care.

J. Contractor's attention is directed to Section 01100, Summary of Work, paragraph 1.7, Work Days and Hours, for certain limitations on Contractor's rights under this Paragraph 15.2, Change of Contract Time.

15.3. Notice of Delay

Within seven (7) Days of the beginning of any delay, Contractor shall notify City in writing, by submitting a notice of potential claim, of all anticipated delays resulting from the delay event in question. Any request for extension of time shall be accompanied by Contractor's written statement that the adjustment claimed is the entire adjustment to which the claimant is entitled as a result of the occurrence of said event, and shall include a written schedule document that demonstrates delay to the critical path using a Time Impact Evaluation as specified in Section 01320, Progress Schedules. City will determine all claims and adjustments in the Contract Time. No claim for an adjustment in the Contract Time will be valid and such claim will be waived if not submitted in accordance with the requirements of this paragraph.

15.4. Time Extensions and/or Damages Entitlements for Delays

A. Contractor may receive a time extension and be compensated for delays caused directly and solely by City.

B. Contractor may receive a time extension without compensation for delays resulting in whole or in part from causes beyond the reasonable control of Contractor and City, e.g. adverse weather conditions exceeding Contract Documents parameters, earthquakes, Acts of God and epidemics. In such cases, a time extension without compensation shall constitute Contractor's sole and exclusive remedy for such delays.

C. Contractor shall not be entitled to any time extension or compensation including, but not limited to, extended field or home office overhead, field supervision, costs of capital, interest, escalation charges, acceleration costs or other impacts for any delays caused in whole or in part by Contractor's failure to perform its obligations under the Contract Documents, or during periods of delay concurrently caused by Contractor and either City or others.

D. Contractor shall not be entitled to damages for delay to the Work caused by the following reasons:

1. City's right to sequence the Work in a manner which would avoid disruption to City's tenants and their contractors or other prime contractors and their respective subcontractors, exercised as a result of Contractor's failure to perform its cooperation and coordination responsibilities required by Contract Documents; City's enforcement of any government act or regulation; or the provisions of the Contract Documents;

2. For changed Site conditions that are beyond the parties' contemplation, except that City may approve direct costs associated with unknown conditions (but not costs or damages which result from such delays); and

3. Extensive requests for clarifications to Contract Documents or Contract Modifications thereto, provided such clarifications or Contract Modifications are processed by City or its consultants in a reasonable time commensurate with Contract Documents requirements.

15.5. Liquidated Damages

A. Time is of the essence. Execution of Contract Documents by Contractor shall constitute acknowledgement by Contractor that Contractor understands, has ascertained and agrees that City will actually sustain damages in the amount fixed in the Contract Documents for each and every Day during which completion of Work required is delayed beyond expiration of time fixed for completion or extensions of time allowed pursuant to provisions hereof. Contractor and City agree that specified measures of liquidated damages shall be presumed to be the damages actually sustained by City as defined below, and that because of the nature of the Project, it would be impracticable or extremely difficult to fix the actual damages.

B. Liquidated damages shall be considered not as a penalty but as agreed monetary damage sustained by City for increased Project administration expenses, including extra inspection, construction management and architectural and engineering expenses related to the Project and Contract Documents because Contractor failed to perform and complete Work within time fixed for completion or extensions of time allowed pursuant to provisions hereof. Liquidated damages shall not be deemed to include within their scope additional damages or administrative costs arising from Defective Work, lost revenues, interest expenses, cost of completion of the Work, cost of substitute facilities, claims and fines of regulatory agencies, damages suffered by others or other forms of liability claimed against City as a result of delay (e.g., delay or delay related claims of other contractors, subcontractors or tenants), and defense costs thereof. Contractor shall be fully responsible for the actual amount of any such damages it causes, in addition to the liquidated damages otherwise due City.

C. City may deduct from any money due or to become due to Contractor subsequent to time for completion of entire Work and extensions of time allowed pursuant to provisions hereof, a sum representing then-accrued liquidated damages. Should Contractor fall behind the approved Progress Schedule, City may deduct liquidated damages based on its estimated period of late completion. City need not wait until Final Completion to withhold liquidated damages from Contractor's progress payments. Should money due or to become due to Contractor be insufficient to cover aggregate liquidated damages due, then Contractor forthwith shall pay the remainder of the assessed liquidated damages to City.

16. WORKING CONDITIONS AND PREVAILING WAGES

16.1. Hours of Work

Unless specified otherwise in the Contract Documents, Work shall be performed in 8-hour shifts between 7:00 AM and 5:00 PM on Working Days, except to protect the public's health, safety, and welfare or to protect the Work. For any Work planned to be performed by the Contractor outside normal City work hours, Contractor shall submit a written request at least two (2) Working Days in advance for City's approval in its sole discretion. All extra costs incurred by the City for this purpose shall be paid by the Contractor, unless written authorization to waive such charges is given by the Engineer or it is specified otherwise in the Contract Documents. Such costs may be withheld from any succeeding monthly progress payment.

16.2. Use of Site/Sanitary Rules

A. All portions of the Work shall be maintained at all times in neat, clean and sanitary condition. Contractor shall furnish toilets for use of Contractor's and Subcontractors' employees on the Site where needed, and their use shall be strictly enforced. All toilets shall be properly secluded from public observation, and shall be located, constructed and maintained subject to City's approval.

B. Contractor shall confine construction equipment, the storage of materials and equipment and the operations of workers to the Site and land areas identified in and permitted by Contract Documents and other land and areas permitted by applicable laws and regulations, rights of way, permits and easements or as designated by City, and shall not unreasonably encumber the premises with construction equipment or other materials or equipment. Contractor shall assume full responsibility for any damage to any such land or area, any improvement located thereon, or to the owner or occupant thereof resulting from the performance of Work.

C. During the progress of the Work, Contractor shall keep the Site and the Project free from accumulations of waste materials, rubbish and other debris resulting from the Work. At the completion of the Work, Contractor shall remove all waste materials, rubbish and debris from and about the Site as well as all tools, appliances, construction equipment and machinery and surplus materials. Contractor shall leave the premises clean and ready for occupancy by City at Substantial Completion of Work. Contractor shall restore to original condition all property not designated for alteration by Contract Documents.

D. Contractor shall not load nor permit any part of any structure or pavement to be loaded in any manner that will endanger the structure or pavement, nor shall Contractor subject any part of Work or adjacent property to stresses or pressures that will endanger it. Contractor shall conduct all necessary existing conditions investigation regarding structural, mechanical, electrical or any other system existing, shall perform Work consistent with such existing conditions, and shall have full responsibility for insufficiencies or damage resulting from insufficiencies of existing systems, equipment or structures to accommodate performing the Work.

///

16.3. Protection of Work, Persons, Property, and Operations

A. Contractor shall be responsible for initiating, maintaining and supervising all safety precautions and programs in connection with Work. Contractor shall comply with all safety requirements specified in any safety program established by City, or required by state, federal or local laws and ordinances. Contractor shall be responsible for all damage to Work, property or structures, all injuries to persons, and all damage and interruptions to City's operations, arising from the performance of Work of the Contract Documents. Except as otherwise expressly approved by City in writing, Contractor shall at all times perform all Work in a manner which does not interrupt, damage or otherwise adversely impact any existing City facilities or operations.

B. Contractor shall comply with all applicable laws and regulations of any public body having jurisdiction for safety of persons or property or to protect them from damage, injury or loss; and shall erect and maintain all necessary safeguards for such safety and protection. Contractor shall notify owners of adjacent property and of Underground Facilities and utility owners when prosecution of the Work may affect them, and shall cooperate with them in the protection, removal, relocation and replacement of their property.

C. Contractor shall remedy all damage, injury, loss or interruption to any property or operations referred to in paragraph 16.3.A of this Document 00700, caused, directly or indirectly, in whole or in part, by Contractor, any Subcontractor, supplier, or any other person or organization directly or indirectly employed by any of them to perform or furnish any Work or anyone for whose acts any of them may be liable. Contractor's duties and responsibility for safety and for protection of Work shall continue until such time as all the Work is completed and Final Acceptance of the Work. City and its agents do not assume any responsibility for collecting any indemnity from any person or persons causing damage to Contractor's Work.

D. Contractor shall designate a qualified and experienced safety representative at the Site whose duties and responsibilities shall be the prevention of accidents and the maintaining and supervising of safety precautions and programs.

E. City may, at its option, retain such moneys due under the Contract Documents as City deems necessary until any and all suits or claims against Contractor for injury to persons, property or operations shall be settled and City receives satisfactory evidence to that effect.

16.4. Responsibility for Safety and Health

A. Contractor shall ensure that its and each tier of Subcontractors' employees, agents and invitees comply with applicable health and safety laws while at the Site. These laws include the Occupational Safety and Health Act of 1970 and rules and regulations issued pursuant thereto, and City's safety regulations as amended from time to time. Contractor shall comply with all City directions regarding protective clothing and gear.

///

///

B. Contractor shall be fully responsible for the safety of its and its Subcontractors' employees, agents and invitees on the Site. Contractor shall notify City, in writing, of the existence of hazardous conditions, property or equipment at the Site that are not under Contractor's control. Contractor shall be responsible for taking all the necessary precautions against injury to persons or damage to the property of Contractor, Subcontractors or persons from recognized hazards until the responsible party corrects the hazard.

C. Contractor shall confine all persons acting on its or its Subcontractors' behalf to that portion of the Site where Work under the Contract Documents is to be performed: City designated routes for ingress and egress thereto and any other City designated area. Except those routes for ingress and egress over which Contractor has no right of control, within such areas, Contractor shall provide safe means of access to all places at which persons may at any time have occasion to be present.

16.5. Emergencies

In emergencies affecting the safety or protection of persons or Work or property at the Site or adjacent thereto, Contractor, without special instruction or authorization from City, is obligated to act to prevent threat and damage, injury or loss, until directed otherwise by City. Contractor shall give City prompt written notice if Contractor believes that any significant changes in Work or variations from Contract Documents have been caused thereby. If City determines that a change in the Contract Documents is required because of the action taken by Contractor in response to such an emergency, a Change Order or Construction Change Directive will be issued to document the consequences of such action.

16.6. Use of Roadways and Walkways

Contractor shall not interfere with use of any roadway, walkway, or other facility for vehicular or pedestrian traffic without written approval of the Engineer. Before beginning any interference and only with Engineer's prior concurrence, Contractor may provide detour or temporary bridge for traffic to pass around or over the interference, which Contractor shall maintain in satisfactory condition as long as interference continues. Unless otherwise provided in the Contract Documents, Contractor shall bear the cost of these temporary facilities.

16.7. Nondiscrimination

No person or entity shall discriminate in the employment of persons upon public works because of race, religious creed, color, national origin, ancestry, physical disability, mental disability, medical condition, marital status, sexual preference, or gender of such persons, except as provided in Section 12940 of the Government Code. Every contractor for public works violating the provisions of Section 1735 of the Labor Code is subject to all the penalties imposed for a violation of Division 2, Part 7, Chapter 1 of the Labor Code.

///

///

///

16.8. Prevailing Wages

A. Contractor shall pay to persons performing labor in and about Work provided for in the Contract Documents an amount equal to or more than the general prevailing rate of per diem wages for (1) work of a similar character in the locality in which the Work is performed and (2) legal holiday and overtime work in said locality. The per diem wages shall be an amount equal to or more than the stipulated rates contained in a schedule that has been ascertained and determined by the Director of the State Department of Industrial Relations and City to be the general prevailing rate of per diem wages for each craft or type of workman or mechanic needed to execute this Contract. Contractor shall also cause a copy of this determination of the prevailing rate of per diem wages to be posted at each Site.

B. Contractor shall forfeit, as a penalty to City, Fifty Dollars ($50.00) for each laborer, workman, or mechanic employed in performing labor in and about the Work provided for in the Contract Documents for each Day, or portion thereof, that such laborer, workman or mechanic is paid less than the said stipulated rates for any work done under the Contract Documents by him or her or by any Subcontractor under him or her, in violation of Articles 1 and 2 of Chapter 1 of Part 7 of Division II of the California Labor Code. The sums and amounts which shall be forfeited pursuant to this paragraph 16.8.B and the terms of the Labor Code shall be withheld and retained from payments due to Contractor under the Contract Documents, pursuant to this Document 00700 and the Labor Code, but no sum shall be so withheld, retained or forfeited except from the final payment without a full investigation by either the State Department of Industrial Relations or by City. The Labor Commissioner pursuant to Labor Code Section 1775 shall determine the final amount of forfeiture.

C. Contractor shall insert in every subcontract or other arrangement which Contractor may make for performance of work or labor on Work provided for in the Contract, provision that Subcontractor shall pay persons performing labor or rendering service under subcontract or other arrangement not less than the general prevailing rate of per diem wages for work of a similar character in the locality in which the Work is performed, and not less than the general prevailing rate of per diem wages for holiday and overtime work fixed in the Labor Code.

D. Contractor stipulates that it shall comply with all applicable wage and hour laws, including without limitation Labor Code Section 1813.

16.9. Environmental Controls

Contractor shall comply with all rules, regulations, ordinances, and statutes that apply to any work performed under the Contract Documents including, without limitation, any toxic, water and soil pollution controls and air pollution controls specified in Government Code, Section 11017. Contractor shall be responsible for insuring that Contractor's employees, Subcontractors and the public are protected from exposure to airborne hazards or contaminated water, soil or other toxic materials used during or generated by activities on the Site or associated with the Project.

///

///

16.10. Shoring Safety Plan

A. At least five Days in advance of excavating any trench five feet or more in depth, Contractor shall submit to City a detailed plan showing the shoring, bracing and sloping design and other provisions to be made for worker protection from the hazard of caving ground during the excavation, as required by Labor Code Section 6705. A civil or structural engineer registered in California shall prepare and sign any plan that varies from the shoring system standards established by the State Construction Safety Orders.

B. During the course of Work, Contractor shall be responsible for determining where sloping, shoring, and/or bracing is necessary and the adequacy of the design, installation, and maintenance of all shoring and bracing for all excavation, including any excavation less than five feet in depth. Contractor will be solely responsible for any damage or injuries that may result from excavating or trenching. City's acceptance of any drawings showing the shoring or bracing design or work schedule shall not relieve Contractor of its responsibilities under this paragraph 16.10.

END OF DOCUMENT

THIS PAGE

WAS INTENTIONALLY

LEFT BLANK

DOCUMENT 00810

SUPPLEMENTARY CONDITIONS – HAZARDOUS MATERIALS

1. SUMMARY

This Document 00810 includes requirements that supplement the paragraphs of Document 00700, General Conditions, as they apply to location, removal, remediation, disposal, and abatement of hazardous materials and hazardous waste.

2. SUPPLEMENTS

A. Supplement to paragraph 2.1, Investigation Prior to Bidding:

1. Add to the end of paragraph 2.1.B a new paragraph that reads:

"4. Matters Shown in Hazardous Materials Surveys for Informational Purposes: Reference is made to Document 00340, Hazardous Materials Surveys, for hazardous materials surveys included with the Contract Documents and use of data therein. These materials are not Contract Documents and, except for any "technical data" regarding the location of hazardous materials, as limited in Document 00340, Hazardous Materials Surveys, Contractor shall not in any manner rely on the information in these materials. Subject to the foregoing, Contractor shall make its own independent investigation of all conditions affecting the Work and shall not rely on information provided by City."

B. Supplement to paragraph 5.7, Precedence of Documents:

1. Add to the end of paragraph 5.7 a new paragraph that reads:

"5.7.E. Should any provision or requirement of any Contract Document conflict with another provision or requirement in the Contract Documents on subject matters of hazardous waste abatement, clean up, disposal, or required safety standards or methods, then the most stringent provision or requirement shall control."

C. Supplement to paragraph 7.2, Means and Methods of Construction:

1. Number the current paragraph 7.2.A and add to the end of paragraph 7.2 a new paragraph that reads:

"7.2.B Nothing contained in these Contract Documents or inferable therefrom shall be deemed or construed to:
1) Make Contractor the agent, servant, or employee of City; or
2) Create any partnership, joint venture, or other association between City and Contractor."

D. Supplement to paragraph 8, Control of the Work:

1. Add to the end of paragraph 8.2 new paragraphs that read:

"8.2.F City shall exercise administration on Contract Documents. City has employed a consultant to assist in the preparation of the hazardous materials abatement contract specifications. City reserves the right to assign or delegate to this consultant, or any other consultant ("Consultant") any or all Engineer's responsibilities under Contract Documents or alternatively to act as City's representative. Contractor will be notified in writing of any such delegation.

8.2.G Cooperate with Consultant as directed by City. Consultant's duties may include observing Contractor's health and safety program and practices, observing the abatement construction activities, observing the extent of material removed from each job site, reviewing payment requests, reviewing reports required by governmental or quasi-governmental agencies or Contract Documents, and providing clearance tests after abatement is completed. No action, omission to act, approval, or failure to advise Contractor as to any matter by Consultant shall in any way relieve Contractor from its responsibility for the performance of Work in accordance with Contract Documents and applicable law. Unless directed otherwise in writing by City, do not communicate directly with Consultant and shall direct all communications to City."

E. Supplement to paragraph 9, Warranty, Guaranty, and Inspection of Work:

1. Add to the end of paragraph 9.1 a new paragraph that reads:

"9.1.D Additional Warranties and Representations:

1) Contractor represents and warrants that it, its employees and its Subcontractors and their employees, shall at all times have the required levels of familiarity with the Site and the Work, training and ability to comply fully with all applicable law and Contract Documents requirements for safe and expeditious performance of the Work, including whatever training is or may be required regarding the activities to be performed (including, but not limited to, all training required to adequately address the actual or potential dangers of Contract performance).

2) Contractor represents and warrants that it, its employees and its subcontractors and their employees, shall at all times have and maintain in good standing any and all certifications and licenses required by applicable federal, state, and other governmental and quasi-governmental requirements applicable to the Work.

3) Contractor represents and warrants that it has studied carefully all requirements of the Contract Documents regarding procedures for demolition, hazardous waste abatement, or safety practices, specified in the Contract Documents, and prior to submitting its Bid, has either:

(a) Verified to its satisfaction that the specified procedures are adequate and sufficient to achieve the results intended by Contract Documents; or

(b) By way of approved "or equal" request or request for clarification and written Addenda, secured changes to the specified procedures sufficient to achieve the results intended by Contract Documents.

4) Contractor accepts the risk that any specified procedure will result in a completed Project in full compliance with all Contract Documents requirements."

2. Number the current paragraph 9.6.A and add to the end of paragraph 9.6 a new paragraph that reads:

"9.6.B City reserves the right, in its sole discretion, to conduct air monitoring, earth monitoring, work monitoring, and any other tests (in addition to testing required under Document 00520, Agreement, or applicable Law), to monitor Contract requirements of safe and statutory compliant work methods and (where applicable) safe re-entry level air standards under state and federal Law upon completion of the Work, and compliance of the Work with periodic and final inspection of public and quasi-public entities having jurisdiction.

1) Contractor acknowledges that City also has the right to perform, or cause to be performed, various activities and tests including, but not limited to, pre-abatement, during abatement and post-abatement air monitoring, provided that City shall have no obligation to perform said activities and tests, and that a portion of said activities and tests may take place prior to the completion of Work by Contractor. In the event City elects to perform these activities and tests, afford City ample access to the Site and all areas of the Work as may be necessary for the performance of these activities and tests. Include the potential impact of these activities for tests by City in the Contract Sum and the scheduled completion date.

2) Notwithstanding City's rights granted by this paragraph 9, Contractor may be required to retain its own industrial hygiene consultant and shall have primary responsibility for collecting samples and performing all applicable, relevant, or appropriate activities and tests including, but not limited to, pre-abatement, during abatement, and post-abatement air monitoring, required by Contract Documents, applicable Law, or both, and City reserves the right to request documentation of all such activities and tests performed by Contractor relating to Work."

F. Supplement to paragraph 11.2, Cost Data:

1. Add to the end of paragraph 11.2 new paragraphs that read:

"11.2.E Obtain and maintain and shall furnish to City on completion of Work or at any other time requested by City, all necessary, permits, licenses, approvals, authorizations, notifications, training certificates, respirator certificates, reports, correspondence, tests results, air monitoring certificates, forms, medical records, medical certificates, notes and photographs of Work conditions, approved shipping and disposal facility receipts, manifests, and all other documentation required by Contract Documents or applicable Law, or both.

11.2.F Provide City with copies of each such document as it is generated and shall, as a condition to final payment, provide City with a complete set of such documents (bound, organized, and indexed) at the conclusion of Work. Keep and maintain in retrievable files true and correct copies of all such documents for a period of not less than 30 years after Final Completion of the Work. City shall have the right to inspect or photocopy these records and, if Contractor should cease business operations, then it shall furnish these records to City."

G. Supplement to paragraph 13, Legal and Miscellaneous:

1. Add to the end of paragraph 13.1 new paragraphs that read:

"13.1.C Compliance with Laws. Contractor represents that it is familiar with and shall comply with all Laws applicable to the Work or completed Work including, but not limited to all Laws relating to:

1) Protection of the public health, welfare, and environment;

2) Generation, processing, treatment, handling, storage, transport, disposal, destruction, or other management of asbestos, PCB, lead, petroleum-based products, or other hazardous materials of any kind; or

3) Protection of environmentally sensitive areas such as wetlands.

13.1.D Disposal. Contractor has the sole responsibility for determining current waste storage, handling, and transportation and disposal regulations for the Site and for each waste disposal facility. Contractor shall comply fully at Contractor's sole cost and expense with these regulations and any applicable Law. City may, but is not obligated to, require submittals with this information for it to review consistent with Contract Documents.

13.1.E Tracking. Contractor shall develop and implement a system acceptable to City to track hazardous waste from the Site to disposal, including appropriate "Hazardous Waste Manifests" on the applicable EPA form , so that City may track the volume of waste Contractor puts in each landfill and receive from each landfill a certificate of receipt.

13.1.F Facilities. Contractor shall provide City with the name and address of each waste disposal facility prior to any disposal, and City shall have the express right to reject any proposed disposal facility. Contractor may not use any disposal facility to which City has objected. Contractor shall document actual disposal or destruction of waste at a designated facility by completing a disposal certificate or certificate of destruction and forwarding the original to the Contractor (with a copy to City)."

///

///

///

2. Number the text of current paragraph 13.2 paragraph 13.2.A and add to the end of paragraph 13.2 new paragraphs that read:

"13.2.B Before performing any of the Work, and at such other times as may be required by applicable Law, deliver all requisite notices and obtain the approval of all governmental and quasi-governmental authorities having jurisdiction over the Work. Submit evidence satisfactory to City that Contractor and any disposal facility (a) have obtained all required permits, approvals and the like in a timely manner both prior to commencement of the Work and thereafter as and when required by applicable Law, and (b) are in compliance with all such permits, approvals and the like. For example, before commencing any work in connection with the Work involving asbestos-containing materials or PCB subject to regulation, Contractor shall provide the required notice of intent to renovate or demolish to the appropriate state or federal agency having jurisdiction, by certified mail, return receipt required, or by some other method of transmittal for which a return receipt is obtained, and to send a copy of that notice to City. Contractor shall not conduct any Work involving asbestos-containing materials or PCB unless Contractor has first confirmed that the appropriate agency having jurisdiction is in receipt of the required notification. All permits, licenses, and bonds required by governmental or quasi-governmental authorities, fees, deposits, tap fees, offsite easements, and asbestos and PCB disposal facilities necessary for the prosecution of the Work shall be procured and paid for by Contractor. Contractor shall give all notices and comply with the Law bearing on the conduct of the Work as drawn and specified. If Contractor observes or reasonably should have observed that Drawings and Specifications and other Contract Documents are at variance therewith, it shall be responsible for promptly notifying City in writing of such fact. If Contractor performs any Work contrary to Law without such notice to City, Contractor shall bear all costs arising therefrom.

In the case of any permits or notices held in City's name or of necessity to be made in City's name, City will cooperate with Contractor in securing the permit or giving the notice, but Contractor shall prepare for City's review and execution upon approval, all necessary applications, notices, and other materials."

3. Add to the end of paragraph 13.3 a new paragraph that reads:

"13.3.G To the greatest extent permitted by Law, the indemnities and limitation of liability expressed throughout the Contract Documents apply with equal force and effect to any claims or liabilities imposed or existing by virtue of the removal, abatement, and disposal of hazardous waste. This includes liabilities connected to the selection and use of a waste disposal facility, personal injury, property damage, loss of use of property, damage to the environment or natural resources, or "disposal" and "release" of materials associated with the Work (as defined in 42 U.S.C. Section 9601 *et seq*)."

///

4. Add to the end of paragraph 13.7 a new paragraph that reads:

"13.7.G Notwithstanding anything in paragraph 13.7 to the contrary, City shall have an absolute right to terminate for default immediately without notice and without an opportunity to cure should Contractor knowingly or recklessly commit a material breach of the terms of the Contract Documents or the Law on any matter involving the exposure of persons or property to hazardous waste. If the breach exposing persons or property to hazardous waste is due solely to an ordinary, unintentional and non-reckless failure to exercise reasonable care, then the procedures in paragraph 13.7 for termination for default shall apply without modification."

H. Supplement to paragraph 16.2, Protection of Work, Persons, and Property:

1. Add to the end of paragraph 16.2 a new paragraph that reads:

"16.2.F Contractor shall perform safe, expeditious, and orderly work in accordance with the best practices and the highest standards in the hazardous waste abatement, removal, and disposal industry, the Law (as herein defined), and the Contract Documents including, but not limited to, all responsibilities relating to the preparation and return of waste shipment records, all requirements of the Law, delivering of all requisite notices, and obtaining all necessary governmental and quasi-governmental approvals."

END OF DOCUMENT

DOCUMENT 00820

INSURANCE REQUIREMENTS

Without limiting the Contractor's indemnification of the City, and prior to commencing any of the Services required under this Agreement, the Contractor shall purchase and maintain in full force and effect, at its sole cost and expense, the following insurance policies with at least the indicated coverages, provisions and endorsements:

A. COMMERCIAL GENERAL LIABILITY INSURANCE

1. Commercial General Liability Insurance policy which provides coverage at least as broad as Insurance Services Office form CG 00 01. Policy limits are subject to review, but shall in no event be less than, the following:

   $5,000,000 Each occurrence
   $5,000,000 General Aggregate
   $5,000,000 Products/Completed Operations Aggregate
   $5,000,000 Personal Injury
   $5,000,000 Project Aggregate

2. Exact structure and layering of the coverage shall be left to the discretion of Contractor; however, any excess or umbrella policies used to meet the required limits shall be at least as broad as the underlying coverage and shall otherwise follow form.

3. The following provisions shall apply to the Commercial Liability policy as well as any umbrella policy maintained by the Contractor to comply with the insurance requirements of this Agreement:

   a. Coverage shall be on a "pay on behalf" basis with defense costs payable in addition to policy limits;

   b. There shall be no cross liability exclusion which precludes coverage for claims or suits by one insured against another; and

   c. Coverage shall apply separately to each insured against whom a claim is made or a suit is brought, except with respect to the limits of liability.

B. BUSINESS AUTOMOBILE LIABILITY INSURANCE

Business automobile liability insurance policy which provides coverage at least as broad as ISO form CA 00 01 with policy limits a minimum limit of not less than five million dollars ($5,000,000) each accident using, or providing coverage at least as broad as, Insurance Services Office form CA 00 01. Liability coverage shall apply to all owned, non-owned and hired autos.

In the event that the Work being performed under this Agreement involves transporting of hazardous or regulated substances, hazardous or regulated wastes and/or hazardous or regulated materials, Contractor and/or its subcontractors involved in such activities shall provide coverage with a limit of five million dollars ($5,000,000) per accident covering transportation of such materials by the addition to the Business Auto Coverage Policy of Environmental Impairment Endorsement MCS90 or Insurance Services Office endorsement form CA 99 48, which amends the pollution exclusion in the standard Business Automobile Policy to cover

pollutants that are in or upon, being transported or towed by, being loaded onto, or being unloaded from a covered auto.

C. WORKERS' COMPENSATION

1. Workers' Compensation Insurance Policy as required by statute and employer's liability with limits of at least one million dollars ($1,000,000) policy limit Bodily Injury by disease, one million dollars ($1,000,000) each accident/Bodily Injury and one million dollars ($1,000,000) each employee Bodily Injury by disease.

2. The indemnification and hold harmless obligations of Contractor included in this Agreement shall not be limited in any way by any limitation on the amount or type of damage, compensation or benefit payable by or for Contractor or any subcontractor under any Workers' Compensation Act(s), Disability Benefits Act(s) or other employee benefits act(s).

3. This policy must include a Waiver of Subrogation in favor of the City of Santa Clara, its City Council, commissions, officers, employees, volunteers and agents.

D. POLLUTION LIABILITY

In the event that this contract involves hazardous or regulated wastes and/or hazardous or regulated materials, Contractor and/or its subcontractors shall provide a Contractor's Pollution Liability Insurance policy with coverage limits not less than five million dollars ($5,000,000) each claim in connection with the Work performed under this Contract. All activities contemplated in this agreement shall be specifically scheduled on the policy as "covered operations." Any deductible must be declared to and approved by City. Such policy shall cover, at a minimum, liability for bodily injury, damage to and loss of use of property, and clean–up costs arising from sudden, accidental and gradual pollution and remediation in connection with the Work under this Agreement. Contractor will use its best efforts to have the City, Council, officers, employees and volunteers added as additional insureds under this policy. The following provisions shall apply:

1. The policy shall provide coverage for the hauling of waste from the project site to the final disposal location, including non-owned disposal sites.

2. Products/completed operations coverage shall extend a minimum of 3 years after project completion.

3. Coverage shall be included on behalf of the insured for covered claims arising out of the actions of independent contractors.

4. If the insured is using subcontractors the Policy must include work performed "by or on behalf" of the insured.

5. Policy shall contain no language that would invalidate or remove the insurer's duty to defend or indemnify for claims or suits expressly excluded from coverage. Policy shall specifically provide for a duty to defend on the part of the insurer.

E. COMPLIANCE WITH REQUIREMENTS

All of the following clauses and/or endorsements, or similar provisions, must be part of each commercial general liability policy, and each umbrella or excess policy.

1. Additional Insureds. City of Santa Clara, its City Council, commissions, officers, employees, volunteers and agents are hereby added as additional insureds in respect to liability arising out of Contractor's work for City, using Insurance Services Office (ISO) Endorsement CG 20 10 11 85 or the combination of CG 20 10 03 97 and CG 20 37 10 01, or its equivalent.

2. Primary and non-contributing. Each insurance policy provided by Contractor shall contain language or be endorsed to contain wording making it primary insurance as respects to, and not requiring contribution from, any other insurance which the indemnities may possess, including any self-insurance or self-insured retention they may have. Any other insurance indemnities may possess shall be considered excess insurance only and shall not be called upon to contribute with Contractor's insurance.

3. General Aggregate. The general aggregate limits shall apply separately to Contractor's work under this Agreement providing coverage at least as broad as Insurance Services Office (ISO) Endorsement CG 2503, 1985 Edition, or insurer's equivalent (CGL);

4. Cancellation.

   a. Each insurance policy shall contain language or be endorsed to reflect that no cancellation or modification of the coverage provided due to non-payment of premiums shall be effective until written notice has been given to City at least ten (10) days prior to the effective date of such modification or cancellation. In the event of non-renewal, written notice shall be given at least ten (10) days prior to the effective date of non-renewal.

   b. Each insurance policy shall contain language or be endorsed to reflect that no cancellation or modification of the coverage provided for any cause save and except non-payment of premiums shall be effective until written notice has been given to City at least thirty (30) days prior to the effective date of such modification or cancellation. In the event of non-renewal, written notice shall be given at least thirty (30) days prior to the effective date of non-renewal.

5. Other Endorsements. Other endorsements may be required for policies other than the commercial general liability policy if specified in the description of required insurance set forth in Sections A through E of this Document 00820.

F. ADDITIONAL INSURANCE RELATED PROVISIONS

Contractor and City agree as follows:

1. Requirements of specific insurance coverage features described in this Agreement shall not be construed to be a limitation of liability on the part of Contractor or any of its subcontractors, nor to relieve any of them of any liability or responsibility under the Contract Documents, as a matter of law or otherwise. Such requirements are not intended by any Party to be limited to providing coverage for the vicarious liability of the City or to the supervisory role, if any, of City. All insurance coverage provided pursuant to this Agreement in any way relating to City is intended to apply to the full extent of the policies involved.

2. Contractor shall maintain all required insurance policies in full force and effect during entire period of performance of the Services under this Agreement of Contract Documents. Contractor shall also keep such insurance in force during warranty and guarantee periods. At time of making application for extension of time, Contractor shall

submit evidence that insurance policies will be in effect during requested additional period of time.

3. City reserves the right, at any time during the term of this Agreement to change the amounts and types of insurance required by giving the Contractor thirty (30) days advance written notice of such change. If such change results in substantial additional cost to the Contractor, the City will negotiate in good faith additional compensation proportional to the increased benefit to City.

4. Any type of insurance or any increase of limits of liability not described in this Exhibit which Contractor requires for its own protection or in compliance with applicable statutes or regulations, shall be Contractors' responsibility and at its own expense.

5. No liability insurance coverage provided by Contractor to comply with the terms of this Agreement shall prohibit Contractor, or Contractor's employees, or agents, from waiving the right of subrogation prior to a loss. Contractor waives its right of subrogation against Indemnitees. Any property insurance policies affected by Contractor shall be endorsed to delete the subrogation condition as to indemnitees or shall specifically allow Contractor to waive subrogation prior to a loss. Contractor hereby waives any right of recovery against the indemnitees and agrees to require any subcontractor to do so.

6. Contractor agrees to ensure that subcontractors, and any other party involved with the Services who is brought onto or involved in the performance of the Services by Contractor, provide the same minimum insurance coverage required of Contractor, <u>except as with respect to limits</u>. Contractor agrees to monitor and review all such coverage and assumes all responsibility for ensuring that such coverage is provided in conformity with the requirements of this Agreement. Contractor agrees that upon request by City, all agreements with, and insurance compliance documents provided by, such subcontractors and others engaged in the project will be submitted to City for review.

7. Contractor shall cooperate fully with City and Contractor's insurance companies in any safety and accident prevention program and claims handling procedures as established for the performance of Services under this Agreement.

8. All coverage types and limits required under this Agreement are subject to approval, modification and additional requirements by the City, as the need arises. Contractor shall not make any reductions in scope of coverage which may affect City's protection without City's prior written consent.

9. For purposes of applying insurance coverage only, all contracts pertaining to the performance of services will be deemed to be executed when finalized and any activity commences in furtherance of performance under this agreement.

10. Contractor acknowledges and agrees that any actual or alleged failure on the part of City to inform Contractor of non-compliance with any of the insurance requirements set forth in this Agreement in no way imposes any additional obligations on City nor does it waive any of the City's rights under this Agreement or any other regard.

11. Any provision in this Agreement dealing with the insurance coverage provided pursuant to these requirements, is subordinate to and superseded by the requirements contained herein. These insurance requirements are intended to be separate and distinct from any other provision in this Agreement and are intended by the Parties here to be interpreted as such.

12. Contractor agrees to be responsible for ensuring that no contract used by any party involved in any way with the project reserves the right to charge City or Contractor for the cost of additional insurance coverage required by this Agreement. Any such provisions are to be deleted with reference to City. It is not the intent of City to reimburse any third party for the cost of complying with these requirements. There shall be no recourse against City for payment of premiums or other amounts with respect thereto.

13. Contractor agrees to obtain and provide to City evidence of Professional Liability insurance for Architects or Engineers if engaged by Contractor to perform any of the Services required under this Agreement. City shall determine the minimum coverage and policy limits required, after consultation with Contractor.

14. The City acknowledges that some insurance requirements contained in this Agreement may be fulfilled by self-insurance on the part of the Contractor. The Contractor's insurance obligations under this Agreement under may be satisfied in whole or in part by adequately funded self-insurance retention, but only after approval from the City Attorney's Office upon satisfactory evidence of financial capacity.

15. The City reserves the right to withhold payments from the Contractor in the event of material noncompliance with the insurance requirements set forth in this Agreement.

EVIDENCE OF COVERAGE

Prior to commencement of any Services under this Agreement, Contractor, and each and every subcontractor (of every tier) shall, at its sole cost and expense, purchase and maintain not less than the minimum insurance coverage with the endorsements and deductibles indicated in this Agreement. Such insurance coverage shall be maintained with insurers, and under forms of policies, satisfactory to City and as described in this Agreement. Contractor shall file with the City all certificates and endorsements for the required insurance policies for City's approval as to adequacy of the insurance protection.

EVIDENCE OF COMPLIANCE

Contractor or its insurance broker shall provide the required proof of insurance compliance, consisting of Insurance Services Office (ISO) endorsement forms or their equivalent and the ACORD form 25-S certificate of insurance (or its equivalent), evidencing all required coverage shall be delivered to City, or its representative as set forth below, at or prior to execution of this Agreement. Upon City's request, Contractor shall submit to City copies of the actual insurance policies or renewals or replacements. Unless otherwise required by the terms of this Agreement, all certificates, endorsements, coverage verifications and other items required to be delivered to City pursuant to this Agreement shall be mailed to:

EBIX Inc.
City of Santa Clara Water and Sewer Utilities Department
P.O. 12010-S2 or 151 North Lyon Avenue
Hemet, CA 92546-8010 Hemet, CA 92543

Telephone number: 951-766-2280
Fax number: 770-325-0409
Email address: ctsantaclara@ebix.com

QUALIFYING INSURERS

All of the insurance companies providing insurance for Contractor shall have, and provide written proof of, an A. M. Best rating of at least A minus 6 (A- VI) or shall be an insurance company of equal financial stability that is approved by the City or its insurance compliance representatives.

I:\New Agreements\CITY\Updated\EXHIBIT C-05 Public Works Contract over $500,000.doc

END OF DOCUMENT

DOCUMENT 00830

APPRENTICESHIP PROGRAM

1. Contractor and Subcontractors shall comply with the requirements of California Labor Code Sections 1776, 1777.5, and 1777.6 concerning the employment of apprentices by Contractor or Subcontractors. Willful failure to comply may result in penalties, including loss of the right to Bid on or receive Public Works contracts.

2. Section 1777.5, as amended, requires a Contractor or Subcontractor employing tradespersons in any apprenticeable occupation to apply to the joint apprenticeship committee nearest the site of a public works project and which administers the apprenticeship program in that trade for a certification of approval. The certificate shall also fix the ratio of apprentices to journeypersons that will be used in performance of the Contract. The ratio of work performed by apprentices to journeypersons in such cases shall not be less than one hour of apprentices work for every five hours of labor performed by journeypersons (the minimum ratio for the land surveyor classification shall not be less than one apprentice for each five journeypersons), except:

   A. When unemployment for the previous three-month period in the area exceeds an average of 15 percent;

   B. When the number of apprentices in training in the area exceeds a ratio of one to five;

   C. When a trade can show that it is replacing at least 1/30 of its membership through apprenticeship training on an annual basis state-wide or locally; or

   D. Assignment of an apprentice to any work performed under a public works contract would create a condition which would jeopardize his or her life or the life, safety, or property of fellow employees or the public at large or if the specific task to which the apprentice is to be assigned is of such a nature that training cannot be provided by a journeyperson.

3. Contractor is required to make contributions to funds established for administration of apprenticeship programs if Contractor employs registered apprentices or journeypersons in any apprenticeable trade on such contracts and if other contractors on the public works site are making such contributions.

4. Information relative to apprenticeship standards, wage schedules, and other requirements may be obtained from the Director of the California Department of Industrial Relations, or from the Division of Apprenticeship Standards and its branch offices.

END OF DOCUMENT

THIS PAGE

WAS INTENTIONALLY

LEFT BLANK

SECTION 01100

SUMMARY OF WORK

PART 1 GENERAL

1.1 SUMMARY

A. This section includes Summary of Work including:

1. Work Covered By Contract Documents
2. Bid Items, Allowances, and Alternates
3. Work Under Other Contracts
4. Future Work
5. Work Sequence
6. Work Days and Hours
7. Cooperation of Contractor and Coordination with Other Work
8. Maintenance, Product Handling, and Protection
9. Partial Occupancy/Utilization Requirements
10. Contractor Use of Premises
11. Lines and Grades
12. Protection of Existing Structures and Utilities
13. Damage to Existing Property
14. Dust Control
15. Parking
16. Laydown/Staging Area
17. Permits
18. Punch List Verification
19. Actual Damages for Violations
20. Unfavorable Construction Conditions
21. Construction Site Access
22. Specification Data Sheets and Schedules
23. Site Administration
24. Circularizing Business and Residences

1.2 WORK COVERED BY CONTRACT DOCUMENTS

A. Reference Document 00100, Notice Inviting Bids, for a brief description of the Work.

B. Furnish all labor, materials, equipment, services, permits, temporary controls and construction facilities, and all general conditions, seismic requirements, general requirements and incidentals required to complete the Work in its entirety as described in the Contract Documents.

C. The Work of this Contract includes work covered by unit prices and/or lump sum.

D. The Work of this Contract comprises construction of all the Work indicated, described, and shown in the Contract Documents.

E. Unless provided otherwise in the Contract Documents, all risk of loss to Work covered by Contract Documents shall rest with Contractor until Final Acceptance of the Work.

F. Contractor's use of the premises for Work and storage is limited to the area indicated on the plans.

G. Contractor shall be solely responsible for all utilities (including without limitation electric, cable TV, water, gas, telephone, storm drain, sanitary sewer, etc.) at the Site.

H. Connections to Existing Facilities. Unless otherwise specified or indicated, Contractor shall make all necessary connections to existing facilities, including structures, drain lines, and utilities such as water, sewer, gas, telephone, and electric. In each case, Contractor shall receive permission from City or the owning utility prior to undertaking connections.

I. Existing materials and equipment removed and not reused as a part of the Work shall be returned to the City. Contractor shall carefully remove, in a manner to prevent damage, all materials and equipment specified or indicated to be salvaged and reused or to remain the property of City. Contractor shall store and protect salvaged items specified or indicated to be reused in the Work. Salvaged items not to be reused in the Work, but to remain City's property shall be delivered by Contractor in good condition to City at:

City of Santa Clara
Water and Sewer Utilities Corporation Yard
1705 Martin Avenue
Santa Clara, CA 95050

J. Any items specified or indicated to be salvaged which are damaged in removal, storage, or handling through carelessness or improper procedures shall be replaced by Contractor in kind or with new items. Contractor may furnish and install new items instead of those specified or indicated to be salvaged and reused, in which case such removed items will become Contractor's property. Existing materials and equipment removed by Contractor shall not be reused in the Work, except where so specified or indicated.

1.3 BID ITEMS, ALLOWANCES, AND ALTERNATES

A. Any Bid Item may be deleted from the Work and Contract Sum, in total or in part, prior to or after award of Contract without compensation in any form or adjustment of other Bid Items or prices therefore. Should such deletions occur, it shall not impact the basis of award, as publicly announced immediately prior to bid opening.

B. Payment of all items is subject to provisions of Contract Documents, including without limitation Section 01200, Measurement and Payment.

C. For all Bid Items, furnish and install all work indicated and described in Specifications and all other Contract Documents, including connections to existing systems. Work and requirements applicable to each individual Bid Item, or unit of Work, shall be deemed incorporated into the description of each Bid Item (whether Lump Sum, or Unit Price).

D. Bid Items are not intended to be exclusive descriptions of work categories and Bidder shall determine and include in its pricing all materials, labor, and equipment necessary to complete each Bid Item as shown and specified. Reference the Special Provisions for description of Bid Items.

E. Allowances:

1. Allowance work shall be done as change order work and as specified in Section 01250, Modification Procedures. Contractor shall identify Allowance Items (See Document 00400, Bid) work on the Progress Schedules and on Requests for Payment.

2. The Amount given on Document 00400, Bid Form, under each Allowance Item is the sum of money set aside for each Allowance. These amounts shall be included in the Contract Price on the Bid Form.

3. If the cost of work done under any Allowance Item is less than the amount given on the Bid Form under that Allowance Item, the Contract Sum shall be reduced by the difference between the amount given in the Bid Form and the cost of work actually done.

F. Alternates

1. Per Section 01130, Alternates, the lump sum or unit price paid for Alternate items shall be full payment for full Alternate scope; including: cleaning and testing, submittals, and all other Contract Document requirements.

2. Notwithstanding any inclusion of any of the Alternate items in the Award of Contract or the Contract Documents, Contractor shall not proceed with Alternate item work without receiving a written notice to proceed from the City.

1.4 WORK UNDER OTHER CONTRACTS

Reference Special Provisions.

1.5 FUTURE WORK

Reference Special Provisions.

1.6 WORK SEQUENCE

A. Construct Work in stages as outlined in the Contract Documents; coordinate construction schedule and operations with City.

B. Contractor shall schedule Work accordingly.

C. Contractor acknowledges that shoring may be required to maintain a safe excavation and protect facilities or pipelines, including both existing and recently constructed under this Contract. All expenses for shoring of excavations for construction of required improvements shall be included in the appropriate bid items.

1.7 WORK DAYS AND HOURS

Reference Subsection 16.1, Hours of Work, of Document 00700, General Conditions, (page 00700-45).

1.8 COOPERATION OF CONTRACTOR AND COORDINATION WITH OTHER WORK

A. Coordinate with City and any City forces, or other contractors and forces, as required by Document 00700, General Conditions, paragraph 6.

B. Employ a full time coordinator to constantly review Contract Documents, submittals, changes, and prepare overlay drawings as necessary to avoid conflicts, errors, omissions and untimely construction.

1.9 MAINTENANCE, PRODUCT HANDLING, AND PROTECTION

A. Transport, deliver, handle, and store materials and equipment at the Site in such a manner as to prevent the breakage, damage or intrusions of foreign matter or moisture, and otherwise to prevent damage.

B. Hazardous substance compliance: Provide City with copies of the OSHA Material Safety Data Sheets (MSDS) for all products containing a hazardous substance, examples: Adhesives, paints, sealants, and the like.

C. Packaging: Provide packaged material in manufacturer's original containers with seals unbroken and labels intact until incorporated into the Work.

D. Remove all damaged or otherwise unsuitable material and equipment promptly from the Site.

E. Protection: Protect all finished surfaces.

F. Cost of maintenance of systems and equipment prior to Final Acceptance will be considered as included in prices bid and no direct or additional payment will be made therefore.

1.10 PARTIAL OCCUPANCY/UTILIZATION REQUIREMENTS

A. Contractor shall allow City to take possession of and use any completed or partially completed portion of the Project during the progress of the Work as soon as is possible without interference to the Work.

B. Possession, use of Project or work, and placing and installation of equipment by City shall not in any way signify the completion of the Work or any part of it.

C. Contractor shall not be held responsible for damage to the occupied part of the Work resulting from City occupancy.

D. Use and occupancy by City prior to acceptance of the Work does not relieve Contractor of its responsibility to maintain insurance and bonds required under the Contract until entire Work is completed and accepted by City.

E. Prior to date of Final Acceptance of the Work by City, all necessary repairs or renewals in Work or part thereof so used, not due to ordinary wear and tear, but due to defective materials or workmanship or to operations of Contractor, shall be made at expense of Contractor, as required in Document 00700, General Conditions.

F. Use by City of Work or part thereof as contemplated by this section shall in no case be construed as constituting acceptance of Work or any part thereof. Such use shall neither relieve Contractor of any responsibilities under Contract, nor act as waiver by City of any of the conditions thereof.

G. City may specify in the Contract Documents that portions of the Work shall be substantially completed on milestone dates prior to substantial completion of all of the Work. Contractor shall notify City and City's Construction Manager in writing when Contractor considers any such part of the Work ready for its intended use and substantially complete and request City to issue a Certificate of Substantial Completion for that part of the Work.

1.11 CONTRACTOR USE OF PREMISES

A. Confine operations at Site to areas permitted by Contract Documents, permits, ordinances, and laws.

B. Do not unreasonably encumber Project Site with materials or equipment.

C. Assume full responsibility for protection and safekeeping of products stored on premises.

D. Move any stored products that interfere with operations of City or other contractor.

E. Parking, storage, staging, and work areas shall be coordinated with the City, and comply with all other Contract Documents requirements.

1.12 LINES AND GRADES

A. Contractor shall be responsible for the accuracy of the Work. All Work shall be done to the lines, grades, and elevations indicated on the Plans. Contractor shall verify the levels shown on the Plans with existing levels and notify the City of any discrepancies before proceeding with the Work.

B. City shall provide basic horizontal and vertical control points, as shown on the plans, to be used as datums for the Work. All additional survey, layout, and measurement work shall be performed by Contractor.

C. Contractor shall provide at its cost a licensed Civil Engineer or Land Surveyor, competent assistants, and such instruments, tools, stakes and other materials required to complete and maintain the survey, layout, and measurement work. In addition, Contractor shall furnish at its cost said competent persons and such tools, stakes, and other materials as City (and/or the Engineer) may require in establishing or designating control points, or in checking survey, layout, and measurement work performed by Contractor.

D. Contractor shall keep City informed, a reasonable time in advance, of the times and places at which it wishes to do Work, so that any checking deemed necessary by City may be done with minimum inconvenience to City and minimum delay to Contractor.

E. Contractor shall remove and reconstruct Work which is improperly located.

F. No direct payment will be made for Contractor's cost of any Work or delay occasioned by establishing, maintaining, or checking lines and grades or making other measurements, or by inspection, and no extension of time will be allowed for such delays.

1.13 PROTECTION OF EXISTING STRUCTURES AND UTILITIES

A. The Plans may indicate existing above- and below-grade structures, drainage lines, storm drains, sanitary sewers, water, gas, electric, hot water, and other similar items and utilities that are known to City. Contractor shall protect facilities against damage and deleterious substances.

B. Contractor shall locate these known existing installations before proceeding with trenching or other operations which may cause damage, shall maintain them in service where appropriate, and shall repair any damage to them caused by the Work, at no increase in Contract Sum.

C. Additional utilities whose locations are unknown to City are suspected to exist. Contractor must be alert to their existence. If additional utilities are encountered, Contractor must immediately report to City for disposition.

D. In addition to reporting, if a utility is damaged, Contractor must take appropriate action as provided in Document 00700, General Conditions.

E. Additional compensation or extension of time on account of utilities not indicated or otherwise brought to Contractor's attention including reasonable action taken to protect or repair damage shall be determined as provided in Document 00700, General Conditions.

1.14 DAMAGE TO EXISTING PROPERTY

A. Contractor will be responsible for any damage to existing structures, Work, materials, or equipment because of its operations and shall repair or replace any damaged structures, Work, materials, or equipment to the satisfaction of, and at no additional cost to the City.

B. Contractor shall protect all existing structures and property from damage and shall provide bracing, shoring, or other work necessary for such protection.

C. Contractor shall be responsible for all damage to streets, roads, curbs, gutters, sidewalks, highways, shoulders, ditches, embankments, culverts, bridges, or other public or private property, which may be caused by transporting equipment, materials, or workers to or from the Work. Contractor shall make satisfactory and acceptable arrangements with the agency having jurisdiction over the damaged property concerning its repair or replacement.

1.15 DUST CONTROL

A. Contractor shall take reasonable measures to prevent unnecessary dust. The following items shall be specifically implemented to control dust:

1. All construction locations with active excavation shall be watered at least twice daily.

2. Cover all trucks hauling soil, sand, and other loose materials.

3. Pave, apply water daily, or apply non-toxic soil stabilizers on all un-paved access roads, parking areas, and staging areas at construction site.

4. Sweep daily with water sweepers all paved access roads, parking areas, and staging areas at construction sites during earthwork activities.

5. Cover all stockpiles.

6. Limit the speed of all construction vehicles to 5 miles per hour while on un-paved roads at the Site.

B. Buildings or operating facilities which may be affected adversely by dust shall be adequately protected from dust. Existing and new machinery, motors, instrument panels, or similar equipment shall be protected by suitable dust screens. Proper ventilation shall be included with dust screens

1.16 PARKING

Contractor shall provide and maintain suitable parking areas for the use of all construction workers and others performing work or furnishing services in connection with the Project, as required to avoid any need for parking personal vehicles where they may interfere with public traffic, City's operations, or construction activities.

1.17 LAYDOWN/STAGING AREA

Reference Special Provisions.

1.18 PERMITS

A. Applicable permits: Permits, agreements, or written authorizations that are known by the City to apply to this project are listed in the Special Provisions.

1. Cal/OSHA Permit. The Contractor shall obtain, as applicable, a permit as required by Cal/OSHA for each of the following:
   a. Construction of trenches or excavations that are five feet or more in depth and into which a person is required to descend.
   b. Construction or demolition of any building, structure, or scaffolding for falsework more than three stories high, or the equivalent height (36 feet).
   c. Erection or dismantling of vertical shoring systems more than three stories high, or the equivalent height (36 feet).

B. For Traffic Signal Projects, Contractor shall obtain a no-cost electrical permit from the Building Inspection Division prior to the start of Work and shall comply with all inspection requirements of said permit. Contractor shall be responsible for scheduling any required electrical inspections and shall notify the Public Works Inspector of the time of such inspections. The Building Inspection Division Electrical Inspector shall inspect all work from the Tesco Panel to the point of connection to the City power supply for Code compliance.

C. Permits that may be required, such as electrical, mechanical, fire prevention, irrigation, grading, slope protection, tree cutting, etc., have not been applied for and shall be obtained by Contractor. Applicable City permit fees will be paid by the City to the extent specified in Document 00700, General Conditions.

1.19 PUNCH LIST VERIFICATION

A punch list examination will be performed upon Substantial Completion of Work. One follow-up review of punch list items for each discipline will be provided. If further Site visits are required to review punch list items due to incompleteness of the Work by Contractor, Contractor shall reimburse City for these visits.

1.20 ACTUAL DAMAGES FOR VIOLATIONS

A. In addition to damages which are impracticable or extremely difficult to determine, for which liquidated damages will be assessed as described in paragraph 15.5 of Document 00700, General Conditions, City may incur actual damages resulting from loss of use of any permit described in this Section 01100, or from use in violation of legal or regulatory requirements where the violations result from Contractor's activities. Violations or threatened violations may subject the City to fines and/or other costs or civil liabilities.

B. Contractor shall be liable for and shall pay City the amount of any actual losses in addition to liquidated damages or other remedies provided by the Contract Documents.

C. The amount of liquidated damages provided in paragraph 15.5 of Document 00700, General Conditions, is not intended to include, nor does the amount include, any damages incurred by City for reasons other those listed in that paragraph. Any money due or to become due to Contractor may be retained by City to cover both the liquidated and the actual damages described above and, should such money not be sufficient to cover such damages, City shall have the right to recover the balance from Contractor or its sureties.

1.21 UNFAVORABLE CONSTRUCTION CONDITIONS

During unfavorable weather, wet ground, or other unsuitable construction conditions, Contractor shall confine its operations to Work which will not be affected adversely by such conditions. No portion of the Work shall be constructed under conditions which would affect adversely the quality or efficiency thereof, unless special means or precautions are taken by Contractor to perform the Work in a proper and satisfactory manner.

1.22 CONSTRUCTION SITE ACCESS

Contractor shall at all times limit access to the Site to necessary personnel only. All personnel associated with construction of the Project shall enter the site through Contractor's access gate, at the location indicated on the Drawings. Access for construction personnel shall be limited to 7:00 a.m. to 5:00 p.m. local time. All mail and deliveries (Federal Express, equipment, etc.) shall be sent to a separate address (at Contractor's gate), specifically arranged by Contractor for the Project. Contractor is responsible for providing adequate signage to alert delivery persons to the new address.

1.23 SPECIFICATION DATA SHEETS AND SCHEDULES

A. Specifications may have data sheets and schedules as part of specific specification sections. Locations for data entries on the data sheets and schedules may be left blank intentionally. Each line where data may be entered on the data sheet has a selection box in the column "Chk". When the box for a line is checked and no data is entered in the respective line, this indicates that no data is required for that line of the data sheet.

B. Other standard codes which apply to the Work are designated in the Specifications.

1.24 SITE ADMINISTRATION

Contractor shall be responsible for all areas of the Site used by it and by all Subcontractors in the performance of the Work. Contractor shall exert full control over the actions of all employees and other persons with respect to the use and preservation of property and existing facilities, except such controls as may be specifically reserved to City or others. Contractor shall have the right to exclude from the Site all persons who have no purpose related to the Work or its inspection, and may require all persons on the Site (except City's employees) to observe the same regulations, as Contractor requires of its employees.

1.25 CIRCULARIZING BUSINESS AND RESIDENCES

Prior to any work, the Contractor shall notify, by circular, all businesses and residents with street frontage or property affected by the proposed construction. Notification shall be done forty-eight (48) hours in advance of starting the work affecting businesses and residents. The circular shall state the name, address and telephone of the Contractor, starting time and date, nature and extent of the proposed work, and the approximate date upon which the Contractor expects to complete the pertinent construction activity. The circular must be approved by the Engineer or Inspector prior to distribution. Submit circular for approval at least two (2) full working days prior to date of intended distribution.

END OF SECTION

THIS PAGE

WAS INTENTIONALLY

LEFT BLANK

SECTION 01100SP

SUMMARY OF WORK

The paragraphs indicated herein of Section 01100 of the Standard Specifications shall not be modified or deleted, but shall be supplemented as follows:

Add to paragraph 1.5 the following:

A. Construct work to accommodate City operations requirements and the tank coating project during the construction period; Contractor to coordinate construction schedule and operations with City.

Add to paragraph 1.6 the following:

D. Contractor shall notify the City 7 days in advance of proposed shutdown for any utility service.

E. Water Utilities

One tank must be operational at all times. Contractor shall construct as much of the new pipeline as possible without disrupting tank service. Assemble, test, and disinfect the new outlet piping down to the last connection fitting. Complete final connection during an 8 hour shutdown (maximum); then perform bacteriological test for final connection.

F. Suggested Sequence of Construction

1. Install new underground electrical conduits for relocating the Utility (Silicon Valley Power – SVP) 15-kV Service cables. Silicon Valley Power will remove the existing service cables and install the new service cables and connect to their transformer. Coordinate work with SVP.

2. Procure and construct new emergency generator building for a complete functional system.

3. Procure and install new emergency generator unit for a complete functional system.

4. Demolish and remove existing engine and pump assembly including concrete pad, controls and accessories.

5. Procure and install new Automatic Transfer Switch (ATS), Manual transfer Switch (MTS) and Motor Control Center (MCC) for a complete functional system.

6. Provide and install cables and conduits to connect new emergency generator unit, ATS and MTS for a complete functional system

7. Replace existing Station Power transformer and panel board and temporarily

connect to existing power source in conductor gallery. Provide temporary disconnect switch on transformer primary per NEC requirements. Final connection to be made to MCC after utility power is connected to new ATS.

8. Test and commission emergency generator, ATS and MTS.

9. After the emergency generator, ATS and MTS are operational, modify and reconnect Pumps #1 and #2 (verify with City) to new MCC starters. Test each pump for proper operation. Only one (1) pump motor shall be out of service during the cutover. Coordinate power outage and work with City.

10. Transfer utility (SVP) power service to new Switchboard. Coordinate power outage and work with City.

11. Modify and reconnect Pumps #3 and #4 (verify with City) to new MCC starters. Test each pump for proper operation. Only one (1) pump motor shall be out of service during the cutover. Coordinate power outage and work with City.

12. Remove temporary power connection to station power transformer and reconnect to MCC.

13. Perform Functional Acceptance Test for all equipment and systems to verify correct operation of the systems.

END OF SECTION

SECTION 01130

ALTERNATES

1.1 SUMMARY

A. Section Includes:
   1.2 Procedures
   1.3 Selection and Award of Alternates

B. Related Sections and Documents:
   1. Bid: Document 00400
   2. Agreement: Document 00520
   3. Summary of Work: Section 01100
   4. Submittals Procedure: Section 01330
   5. Applicable Sections in Division 2 and above

C. Definition: An Alternate Bid is an amount proposed by Bidder and stated on its Bid to be added to or deducted from the Base Bid amount if City decides to accept a corresponding change, either in scope of Work or in products, materials, equipment, systems, or installation methods described in the Contract Documents.

D. The cost for each add Alternate is the net addition to the Base Bid to incorporate the Alternate into the Work. No other adjustments are made to the Contract Sum.

E. The cost for each deduct Alternate is the net deduction to the Base Bid to incorporate the Alternate into the Work. No other adjustments are made to the Contract Sum.

F. Coordination of related Work is required to ensure that Work affected by each selected Alternate is completed and properly interfaced with Work of Alternates and the overall construction schedule.

1.2 PROCEDURES

A. Submit Alternates with full descriptions of the proposed Alternate and the effect on adjacent or related components.

B. Include as part of each Alternate, miscellaneous devices, accessory objects, and similar items incidental to or required for a complete installation, whether or not mentioned as part of the Alternate. Modify affected adjacent Work as necessary to fully integrate that Work into the Project.

C. Execute accepted Alternates under the same conditions as other Work of this Contract.

D. Specifications Sections contain many of the requirements for materials necessary to achieve the Work described under each Alternate.

E. Coordinate related Work, and modify surrounding Work to integrate the Work of each Alternate in accordance with the Contract Documents.

///

///

1.3 SELECTION AND AWARD OF ALTERNATES

A. The apparent low Bid will be determined by comparing the sum of each Bidder's Total Base Bid plus the selected Alternate Bid Items which are within the announced construction budget. If the construction budget is less than all the Base Bids, the apparent low Bid will be the lowest Base Bid. The construction budget and the order of priority in which the Alternate Bid Items will be considered will be announced by the City immediately before the initial Bid package is opened.

B. Accepted Alternates will be identified in the City-Contractor Agreement.

END OF SECTION

SECTION 01200

MEASUREMENT AND PAYMENT

PART 1 GENERAL

1.1 SUMMARY

Section includes description of requirements and procedures for determining amount of Work performed and for obtaining payment for Work performed.

1.2 REFERENCES

A. California Public Contract Code

B. California Code of Civil Procedure

C. California Government Code

1.3 SCOPE OF WORK

Work under Contract Documents, or under any Bid Item, allowance, or alternate, shall include all labor, materials, taxes, transport, handling, storage, supervision, administration, and all other items necessary for the satisfactory completion of Work, whether or not expressly specified or indicated.

The work includes demolition of existing piping, installation of new piping and valves, instrumentation, and vaults. At the water distribution pump station, the project will improve emergency fire flow capability by removing the single propane-fueled pump and installing a larger diesel-fueled standby generator. In addition, the work includes electrical modifications to the existing pump house. To provide for improved electrical safety at the site, a separate 17 feet by 23 feet pre-fabricated metal building to be constructed adjacent to the existing pump house to facilitate installation of a new 350 KW generator. The work will also include the addition of more instrumentation to provide additional remote monitoring and control capability, as well as improved operation and data reporting through integration with the existing SCADA system

1.4 DETERMINATION OF QUANTITIES

Quantity of work to be paid for under any item for which a unit price is fixed in Contract Documents shall be number, as determined by City, of units of work satisfactorily completed in accordance with Contract Documents or as directed by City. Unless otherwise provided, determination of number of units of work so completed will be based, so far as practicable, on actual measurement or count within prescribed or ordered limits, and no payment will be made for work done outside of limits. Measurements and computations will be made by methods set forth in Contract Documents, including without limitation this Section 01200. If methods are not so set forth, measurements shall be made in any manner which City considers appropriate for class of Work measured (e.g., pre-assigned values, percentage completion, units completed or incremental milestones). Contractor must immediately inform City of any disputes regarding quantity measurements and shall immediately supply City with any documentation supporting the disputed measurements.

1.5 SCOPE OF PAYMENT

A. Except as otherwise expressly stated in Section 01100, Summary of Work, payment to Contractor at the unit price or other price fixed in Contract Documents for performing Work required under any item, or (if the Contract is on a single lump sum price basis) at the lump sum price fixed in the Contract Documents for performing all Work required under Contract Documents, and as either may be adjusted pursuant to any approved Change Order or Construction Change Directive, shall be full compensation for completing, in accordance with Contract Documents, all Work required under the item or under Contract Documents, and for all expense incurred by Contractor for any purpose in connection with the performance and completion of said Work, including all incidental work necessary for completion of the Work.

B. The Contract Sum, whether lump sum, unit price or otherwise, shall be deemed to include all costs necessary to complete required Work, all costs (if any) for loss or damage arising from nature of Work or prosecution of the Work, and from action of elements. Unless Contract Documents expressly provide otherwise, the Contract Sum shall be deemed to include:

1. Any and all costs arising from any unforeseen difficulties which may be encountered during, and all risks of any description connected with, prosecution of Work or prosecution of Bid Item (whether lump sum or unit price) until acceptance by City;

2. All expenses incurred due to suspension, or discontinuance of Work or discontinuance of Bid Item (whether lump sum or unit price) as provided in Contract Documents;

3. Escalation to allow for cost increases between time of Contract Award and completion of Work or completion of Bid Item (whether lump sum or unit price).

4. All incidentals including, but not limited to, required bonds, insurance, traffic controls, and permits.

C. Whenever it is specified herein that Contractor is to do work or furnish materials of any class for which no price is fixed in Contract Documents, it shall be understood that Contractor is to do such work or furnish such materials without extra charge or allowance or direct payment of any sort, and that cost of doing work or furnishing materials is to be included in price Bid, unless it is expressly specified herein, in particular cases, that work or material is to be paid for as extra work.

D. Unit Prices shall apply to work by unit prices if at least one of the following conditions applies:

1. The actual quantities performed on the Project are not less than 75 percent or greater than 125 percent of the estimated quantities contained in Document 00400, Bid.

2. The actual total dollar amount, using the Bid unit price, for work performed on the Project does not vary by more than $10,000 above or below the total Bid item amount contained in Document 00400, Bid.

If actual quantities or amounts exceed these parameters, then the unit price may be adjusted by an amount to reflect the Contractor's incremental cost differential resulting from increased or decreased economies of scale.

Should the City and Contractor be unable to agree on an incremental unit price cost differential, the adjusted cost shall be determined per Section 4-1.03B of the Standard Specifications, with the following exceptions:

1. In the event of increases above the limits described in this Section, the adjusted unit price shall not exceed the Bid unit price, and

2. In the event of decreases below the limits described in this Section, the effected Bid item's revised total Bid item amount shall not exceed the original total Bid item amount.

E. No payment shall be made for materials or equipment not yet incorporated into the Work, except as specified in Section 01100, Summary of Work.

F. The City may, in its discretion, where Contractor requests payment on the basis of materials and equipment not incorporated in the Work, Contractor must satisfy the following conditions:

1. The materials and/or equipment shall be delivered and suitably stored at the Site or at another local location agreed to in writing, for example, a mutually acceptable warehouse;

2. Full title to the materials and/or equipment shall vest in City at the time of delivery to the Site, warehouse or other storage location;

3. Obtain a negotiable warehouse receipt, endorsed over to City for materials and/or equipment stored in an off-site warehouse. No payment will be made until such endorsed receipts are delivered to City;

4. Stockpiled materials and/or equipment shall be available for City inspection, but City shall have no obligation to inspect them and its inspection or failure to inspect shall not relieve Contractor of any obligations under the Contract Documents. Materials and/or equipment shall be segregated and labeled or tagged to identify these specific Contract Documents;

5. After delivery of materials and/or equipment, if any inherent or acquired defects are discovered, defective materials and/or equipment shall be removed and replaced with suitable materials and/or equipment at Contractor's expense;

6. At Contractor's expense, ensure the materials and/or equipment against theft, fire, flood, vandalism, and malicious mischief, as well as any other coverage required under the Contract Documents;

7. Contractor's Application for Payment shall be accompanied by a bill of sale, invoice or other documentation warranting that City has received the materials and equipment free and clear of all liens and evidence that the materials and equipment are covered by appropriate property insurance and other arrangements to protect City's interest therein, all of which must be satisfactory to City. This documentation shall include, but not be limited to, conditional releases of mechanics' liens and stop notices from all those providing materials and equipment as to which the Application for Payment relates, as well as

unconditional releases of the same from the same as to the previous Application for Payment for which they have not already been provided.

G. Amounts previously paid for materials and equipment prior to incorporation into the Work shall be deducted from amounts otherwise due Contractor as they are incorporated.

1.6 BASIS OF PAYMENT

A. Unit Price Quantities: When estimated quantity for specific portions of Work is listed in the Bid, quantity of Work to be paid for shall be actual number of units satisfactorily completed, as determined by City and agreed to by Contractor, in accordance with Contract Documents.

B. Lump Sum: When estimated quantity for specific portion of Work is not indicated and unit is designated as lump sum, payment will be on a lump sum basis for Work satisfactorily completed in accordance with Contract Documents.

C. Allowances: Allowance items (if any) will be paid for as provided in Section 01100, Summary of Work. Funds authorized for Allowance work will not be released for Contract payments unless City has authorized Allowance work in writing.

D. City does not expressly, or by implication, agree, warrant, or represent in any manner, that actual amount of Work will correspond with amount shown or estimated and reserves right to increase or decrease amount of any class or portion of Work, to leave out entire Bid Item or Items, or to add work not originally included in Bid or Contract Documents, when in its judgment such change is in best interest of City. No change in Work shall be considered a waiver of any other condition of Contract Documents. No claim shall be made for anticipated profit, for loss of profit, for damages, or for extra payment whatever, except as otherwise expressly provided for in Contract Documents, because of any differences between amount of work actually done and estimated amount as set forth herein, or for elimination of Bid Item.

1.7 PROGRESS PAYMENTS

A. If requested by Contractor, progress payments will be made monthly.

B. Schedule of Values:

1. Within ten (10) Days from issuance of Notice of Award and prior to the Contractor's first Application for Payment, submit a detailed breakdown of its Bid by scheduled Work items and/or activities, including coordination responsibilities and Project Record Documents responsibilities. Where more than one Subcontractor comprises the work of a Work item or activity, the Schedule of Values shall show a separate line item for each subcontract. Furnish such breakdown of the total Contract Sum by assigning dollar values (cost estimates) to each applicable Progress Schedule network activity, which cumulative sum equals the total Contract Sum. The format and detail of the breakdown shall be as directed by City to facilitate and clarify future progress payments to Contractor for direct Work under Contract Documents. This breakdown shall be referred to as the Schedule of Values.

2. Contractor's overhead, profit, insurance, cost of bonds (except to the extent expressly identified in a Bid Item) and/or other financing, as well as "general conditions costs," (e.g., Site cleanup and maintenance, temporary roads and

access, off-Site access roads, temporary power and lighting, security, and the like), shall be prorated through all activities so that the sum of all the Schedule of Values line items equals Contractor's total Contract Sum, less any allowances designated by City. Scheduling, record documents and quality assurance control shall be separate line items.

3. City will review the breakdown in conjunction with the Progress Schedule to ensure that the dollar amounts of this Schedule of Values are, in fact, fair market cost allocations for the Work items listed. Upon favorable review by City, City will accept this Schedule of Values for use. City shall be the sole judge of fair market cost allocations.

4. City will reject any attempt to increase the cost of early activities, i.e., "front loading," resulting in a complete reallocation of moneys until such "front loading" is corrected. Repeated attempts at "front loading" may result in suspension or termination of the Work for default, or refusal to process progress payments until such time as the Schedule of Values is acceptable to City.

C. Applications for Payment: Contractor shall establish and maintain records of cost of the Work in accordance with generally accepted accounting practices. In addition:

1. On or before the 20th Day of each month, but after receipt of City's approval of the updated Schedule as required by Section 01320, Progress Schedules and Reports, Contractor shall submit to City two (2) copies of an Application for Payment for the cost of the Work put in place during the period from the 15th Day of the previous month to the 15th Day of the current month. Such Applications for Payment shall be for the total value of activities completed or partially completed, including approved activity costs, based upon Schedule of Values prices (or Bid item prices if unit price) of all labor and materials incorporated in the Work up until midnight of the last Day of that one month period, less the aggregate of previous payments. Accumulated retainage shall be shown as separate item in payment summary. Contractor shall submit in a form acceptable to City an itemized cost breakdown of Contractor's record of Cost of the Work together with supporting data and any certification required by City. If Contractor is late submitting its Application for Payment, that Application may be processed at any time during the succeeding one-month period, resulting in processing of Contractor's Application for Payment being delayed for more than a Day for Day basis.

2. Applications for Payment may include, but are not necessarily limited to the following:

a. Material, equipment, and labor incorporated into the Work, less any previous payments for the same;

b. Up to 75 percent of the cost of equipment identified in paragraph 1.5F of this Section 01200 (if any), if purchased and delivered to the Site or stored off Site, as may be approved by City.

c. Up to 50 percent of the cost of materials identified in paragraph 1.5F of this Section 01200 (if any), specifically fabricated for the Project that are not yet incorporated into the Work.

3. At the time any Application for Payment is submitted, certify in writing the accuracy of the Application and that Contractor has fulfilled all scheduling requirements of Document 00700, General Conditions, and Section 01320, Progress Schedules and Reports, including updates and revisions. A responsible officer of Contractor shall execute the certification.

4. No progress payment will be processed prior to City receiving all requested, acceptable schedule update information. Failure to submit a schedule update complying with Section 01320, Progress Schedules and Reports, justifies denying the entire Application for Payment.

5. Each Application for Payment shall list each Change Order and Construction Change Directive ("CCD") executed prior to date of submission, including the Change Order/CCD Number, and a description of the work activities, consistent with the descriptions of original work activities. Submit a monthly Change Order/CCD status log to City.

6. If City requires substantiating data, submit information requested by City, with cover letter identifying Project, Application for Payment number and date, and detailed list of enclosures. Submit one copy of substantiating data and cover letter for each copy of Application for Payment submitted.

7. If Contractor fails or refuses to participate in work reconciliations or other construction progress evaluation with City, Contractor shall not receive current payment until Contractor has participated fully in providing construction progress information and schedule update information to City.

D. Progress Payments:

1. City will not process payment requests prior to the Contractor presenting the City with evidence that the Project Record Documents have been updated to show all changes up to and including the month for which the payment request is being made (See Section 01780, Project Record Documents).

2. City will review Contractor's Application for Payment following receipt. If adjustments need to be made to percent of completion of each activity, City will make appropriate notations and return to Contractor. Contractor shall revise and resubmit. All parties shall update percentage of completion values in the same manner, i.e., express value of an accumulated percentage of completion to date.

3. Each Application for Payment may be reviewed by City and/or inspectors to determine whether the Application for Payment is proper, and shall be rejected, revised, or approved by City pursuant to the Schedule of Values prepared in accordance with paragraph 1.7B of this Section 01200.

4. If it is determined that the Application for Payment is not proper and suitable for payment, City will return it to the Contractor as soon as practicable, but no later than seven Days after receipt, together with a document setting forth in writing the reasons why the Application for Payment is not proper. If City determines that portions of the Application for Payment are not proper or not due under the Contract Documents, then City may approve the other portions of the Application for Payment, and in the case of disputed items or defective Work not remedied, may withhold up to 150 percent of the disputed amount from the progress payment.

5. Pursuant to Public Contract Code Section 20104.50, if City fails to make any progress payment within 30 Days after receipt of an undisputed and properly submitted Application for Payment from Contractor, City shall pay interest to the Contractor equivalent to the legal rates set forth in subdivision (a) of Section 685.010 of the Code of Civil Procedure. The 30-Day period shall be reduced by the number of Days by which City exceeds the seven-Day return requirement set forth herein.

6. As soon as practicable after approval of each Application for Payment for progress payments, City will pay to Contractor in manner provided by law, an amount equal to 95 percent of the amounts otherwise due as provided in the Contract Documents (City will retain the remaining 5 percent as retention), or a lesser amount if so provided in the Contract Documents, provided that payments may at any time be withheld if, in judgment of City, Work is not proceeding in accordance with Contract, or Contractor is not complying with requirements of Contract, or to comply with stop notices or to offset liquidated damages accruing or expected.

7. Before any progress payment or final payment is due or made, Contractor shall submit satisfactory evidence that Contractor is not delinquent in payments to employees, Subcontractors, suppliers, or creditors for labor and materials incorporated into Work. This specifically includes, without limitation, conditional lien release forms for the current progress payment and unconditional release forms for past progress payments. City also may elect in its sole discretion to pay progress payments by joint check to Contractor and each Subcontractor having an interest in that progress payment in such amount.

8. City reserves and shall have the right to withhold payment for any equipment and/or specifically fabricated materials that, in the sole judgment of City, are not adequately and properly protected against weather and/or damage prior to or following incorporation into the Work.

9. Granting of progress payment or payments by City, or receipt thereof by Contractor, shall not be understood as constituting in any sense acceptance of Work or of any portion thereof, and shall in no way lessen liability of Contractor to replace unsatisfactory work or material, though unsatisfactory character of work or material may have been apparent or detected at time payment was made.

10. When City shall charge sum of money against Contractor under any provision of Contract Documents, amount of charge shall be deducted and retained by City from amount of next succeeding progress payment or from any other moneys due or that may become due Contractor under Contract. If, on completion or termination of Contract, such moneys due Contractor are found insufficient to cover City's charges against it, City shall have right to recover balance from Contractor or Sureties.

11. The City will not contemplate reducing the retention until the City issues the Certificate of Substantial Completion in accordance with Paragraph 1.3 of Section 01770, Contract Closeout. The City reserves the right to maintain the full retention after the Certificate of Substantial Completion is issued if the Contractor is not complying with the requirements of the Contract, to comply with stop notices, to offset liquidated damages accruing or expected, or for any other reason.

1.8 SUBSTITUTION OF SECURITIES IN LIEU OF RETENTION

A. In accordance with the provisions of Public Contract Code Section 22300, substitution of securities for any moneys withheld under Contract Documents to ensure performance is permitted under following conditions:

1. At request and expense of Contractor, securities listed in Section 16430 of the Government Code, bank or savings and loan certificates of deposit, interest bearing demand deposit accounts, standby letters of credit, or any other security mutually agreed to by Contractor and City which are equivalent to the amount withheld under retention provisions of Contract shall be deposited with Controller or with a state or federally chartered bank in California, as the escrow agent, who shall then pay such moneys to Contractor. Upon satisfactory completion of Contract, securities shall be returned to Contractor.

2. Alternatively, Contractor may request and City shall make payment of retentions earned directly to the escrow agent at the expense of Contractor. At the expense of Contractor, Contractor may direct the investment of the payments into securities and receive the interest earned on the investments upon the same terms provided for in this Section 01200 for securities deposited by Contractor. Upon satisfactory completion of Contract Documents, Contractor shall receive from escrow agent all securities, interest, and payments received by the escrow agent from City, pursuant to the terms of this Section 01200. Pay to each Subcontractor, not later than 20 Days after receipt of the payment, the respective amount of interest earned, net of costs attributed to retention withheld from each Subcontractor, on the amount of retention withheld to ensure the performance of Contractor.

3. Contractor shall be beneficial owner of securities substituted for moneys withheld and shall receive any interest thereon.

4. Enter into escrow agreement with Controller according to Document 00680 (Escrow Agreement for Security Deposits in Lieu of Retention), as authorized under Public Contract Code Section 22300, specifying amount of securities to be deposited, terms and conditions of conversion to cash in case of default of Contractor, and termination of escrow upon completion of Contract Documents.

5. Public Contract Code Section 22300 is hereby incorporated in full by this reference.

1.9 FINAL PAYMENT

A. As soon as practicable after all required Work is completed in accordance with Contract Documents, including punchlist, testing, record documents and Contractor maintenance after Final Acceptance, City will pay to Contractor, in manner provided by law, unpaid balance of Contract Sum of Work (including without limitation retentions), or whole Contract Sum of Work if no progress payment has been made, determined in accordance with terms of Contract Documents, less sums as may be lawfully retained under any provisions of Contract Documents or by law.

B. Prior progress payments shall be subject to correction in the final payment. City's determination of amount due as final payment shall be final and conclusive evidence of

amount of Work performed by Contractor under Contract Documents and shall be full measure of compensation to be received by Contractor.

C. Contractor and each assignee under an assignment in effect at time of final payment shall execute and deliver at time of final payment, and as a condition precedent to final payment, Document 00650, Agreement and Release of Any and All Claims, discharging City, its officers, agents, employees, and consultants of and from liabilities, obligations, and claims arising under Contract Documents.

1.10 EFFECT OF PAYMENT

A. Payment will be made by City, based on City's observations at the Site and the data comprising the Application for Payment. Payment will not be a representation that City has:

1. Made exhaustive or continuous on-Site inspections to check the quality or quantity of Work;

2. Reviewed construction means, methods, techniques, sequences, or procedures;

3. Reviewed copies of requisitions received from Subcontractors and material suppliers and other data requested by City to substantiate Contractor's right to payment; or

4. Made examination to ascertain how or for what purpose Contractor has used money previously paid on account of the Contract Sum.

PART 2 DESCRIPTION OF BID ITEMS

2.1 Summary

The Bid Amounts for each Bid Item will be used for comparative bid analysis. The Bid amounts will also form the basis of monthly progress payments. Each Lump Sum bid amount will undergo further breakdown as described later in this section. Bid items are not intended to be exclusive descriptions of work categories and the Contractor shall determine and include in its pricing all materials, labor, and equipment necessary to complete project in full as shown in Contract Documents and each Bid Item (work phase) as shown and specified.

2.2 Description of Bid Items

BID ITEM NO. 1 - MOBILIZATION/DEMOBILIZATION The lump sum bid for mobilization shall not exceed five percent (5%) of the total bid price. Mobilization shall include: the obtaining of insurance and bonds; moving onto the site of all equipment; submittal and approval of initial project schedule; obtaining and paying for all permits by other agencies as applicable; furnishing temporary construction utilities (temporary power, toilets, water, fences, etc.); installing construction signs; temporary facilities(s); and other construction all as required for the proper performance and completion of the work.

The lump sum bid for demobilization shall not be less than three percent (3%) of the total bid price. Demobilization shall include site cleaning and restoration of surfaces within the job site, post-construction meeting, removal of all temporary facilities and equipment from the work area, disconnection of the temporary construction utilities and turnover of project to the City.

In the event the Contractor writes in a Mobilization/Demobilization price greater than eight percent (8%) on the Bid Schedule found in Section 00400, **BID,** the City will pay any excess with the final Progress Payment.

Contractor may apply for payment of mobilization on a percent complete basis as the items covered in the Mobilization are being completed. Payment for Mobilization/Demobilization will be made at the lump sum price named in the Bid Schedule under Item 1, and no additional compensation shall be made therefore.

BID ITEM NO. 2 – SITE DEMOLITION The lump sum bid for site demolition shall include: the demolition work associated with all yard piping and appurtenances, cutting capping and abandonment of existing utilities, removal and salvage of the concrete vault and associated PRV, ARV and bollards, existing propane tank and foundation.

Contractor may apply for payment of Site Demolition on a percent complete basis as the items covered in Site Demolition are being completed. . Payment for Site Demolition will be made at the lump sum price named in the Bid Schedule under Item 2, and no additional compensation shall be made therefore.

BID ITEM NO. 3 – 8" & 12" DIP RECONFIGURATION The lump sum bid for 8" & 12" DIP reconfiguration shall include: the inlet piping reconfiguration work for the 8" and 12" DIP lines required to accommodate the new flow meter vaults and flush valve vaults. This item will also include the flowmeter, transmitter, valves, excavation and backfill associated with pipe installation. This item includes piping inside flowmeter valve vault.

Contractor may apply for payment of 8" & 12" DIP Reconfiguration work on a percent complete basis as the items covered in the 8" & 12" DIP Reconfiguration are being completed. Payment for 8" & 12" DIP Reconfiguration will be made at the unit price named in the Bid Schedule under Item 3, and no additional compensation shall be made therefore.

BID ITEM NO. 4 – FLOWMETER VAULTS The bid price for flowmeter vaults shall include: installation of two (2) flowmeter vaults including the associated excavation and backfill.

Contractor may apply for payment of Flowmeter Vaults on a percent complete basis as the items covered in Flowmeter Vaults are being completed. Payment for Flowmeter Vaults will be made at the unit price named in the Bid Schedule under Item 4, and no additional compensation shall be made therefore.

BID ITEM NO. 5 – ALTITUDE VALVE MODIFICATIONS The bid price for Altitude Valve Modifications shall include the modification required for the two (2) altitude valves.

Contractor may apply for payment of Altitude Valve Modifications on a percent complete basis as the items covered in Altitude Valve Modifications are being completed. Payment for Altitude Valve Modifications will be made at the unit price named in the Bid Schedule under Item 5, and no additional compensation shall be made therefore.

BID ITEM NO. 6 – 2-INCH FLUSH VALVES The bid price for 2-inch Flush Valves shall include installation two (2) 2-inch flush valves, associated piping and appurtenances, flush valve vault and associated excavation and backfill.

Contractor may apply for payment of 2-inch Flush Valves on a percent complete basis as the items covered in 2-inch Flush Valves are being completed. Payment for 2-inch Flush Valves will be made

at the unit price named in the Bid Schedule under Item 6, and no additional compensation shall be made therefore.

BID ITEM NO. 7 – 6-INCH FLUSH VALVES The bid price for 6-inch Flush Valves shall include installation two (2) 6-inch flush valves, associated piping and appurtenances, flush valve vault and associated excavation and backfill.

Contractor may apply for payment of 6-inch Flush Valves on a percent complete basis as the items covered in 2-inch Flush Valves are being completed. Payment for 6-inch Flush Valves will be made at the unit price named in the Bid Schedule under Item 7, and no additional compensation shall be made therefore.

BID ITEM NO. 8 – TURBIDIMETERS & CABINET The lump sum bid for Turbidimeters & Cabinet shall include: two (2) new turbidimeters and relocation of the existing turbidimeter cabinet.

Contractor may apply for payment of Turbidimeters & Cabinet work on a percent complete basis as the items covered in Turbidimeters & Cabinet equipment are being completed. Payment for Turbidimeters & Cabinet will be made at the lump sum price named in the Bid Schedule under Item 8, and no additional compensation shall be made therefore.

BID ITEM NO. 9 – CHLORINE ANALYZERS The bid price for Chlorine Analyzers shall include: two (2) new chlorine analyzers at each storage tank including the chlorine analyzer enclosures
Contractor may apply for payment of Chlorine Analyzers work on a percent complete basis as the items covered in Chlorine Analyzers equipment are being completed. Payment for Chlorine Analyzers will be made at the unit price named in the Bid Schedule under Item 9, and no additional compensation shall be made therefore.

BID ITEM NO. 10 – FIRE HYDRANT The bid price for Fire Hydrant shall include: one (1) new fire hydrant, restrained FCA, reducing elbow and thrust block, gate valve and 12” plug and associated piping with the fire hydrant assembly.

Contractor may apply for payment of Fire Hydrant work on a percent complete basis as the items covered in Fire Hydrant equipment are being completed. Payment for Fire Hydrant will be made at the unit price named in the Bid Schedule under Item 10, and no additional compensation shall be made therefore.

BID ITEM NO. 11 – FLEXIBLE EXPANSION JOINT – 18” The bid price for Flexible Expansion Joint – 18” shall include: two (2) flexible expansion joints – 18” at the outlet of Storage Tanks 1 and 2.

Contractor may apply for payment of Flexible Expansion Joint – 18” work on a percent complete basis as the items covered in Flexible Expansion Joint – 18” equipment are being completed. Payment for Flexible Expansion Joint – 18” will be made at the unit price named in the Bid Schedule under Item 11, and no additional compensation shall be made therefore.

BID ITEM NO. 12 – OUTLET PIPING - 18” & 20” DIP The bid price for Outlet Piping – 18” & 20” DIP shall include: 120 ft of 18” and 20” DIP pipe at the outlet of Storage Tanks 1 and 2, valves, pipe support and associated excavation and backfill. Piping with the valve vaults is included in this item. The unit price shall be an average price of the 18” and 20” DIP sizes including fittings and appurtenances.

Contractor may apply for payment of Outlet Piping – 18” & 20” DIP work on a percent complete basis as the items covered in Outlet Piping – 18” & 20” DIP equipment are being completed.

Payment for Outlet Piping – 18” & 20” DIP will be made at the unit price named in the Bid Schedule under Item 12, and no additional compensation shall be made therefore.

BID ITEM NO. 13 – VALVE VAULTS The bid price for Valve Vaults shall include: installation of two (2) valve vaults including the associated excavation and backfill.

Contractor may apply for payment of Valve Vaults on a percent complete basis as the items covered in Valve Vaults are being completed. Payment for Valve Vaults will be made at the unit price named in the Bid Schedule under Item 4, and no additional compensation shall be made therefore.

BID ITEM NO. 14 – ACTUATED OUTLET BUTTERFLY VALVES The bid price for Outlet Butterfly Valves shall include: installation of two (2) 18” new butterfly valve in the valve vault and electric motor actuators.

Contractor may apply for payment of Valve Vaults on a percent complete basis as the items covered in Valve Vaults are being completed. Payment for Valve Vaults will be made at the unit price named in the Bid Schedule under Item 14, and no additional compensation shall be made therefore.

BID ITEM NO. 15 – MANUAL OUTLET BUTTERFLY VALVES The bid price for Outlet Butterfly Valves shall include: installation of three (3) 18” new manual butterfly valve outside the valve vaults on the 18” line.

Contractor may apply for payment of Valve Vaults on a percent complete basis as the items covered in Valve Vaults are being completed. Payment for Valve Vaults will be made at the unit price named in the Bid Schedule under Item 15, and no additional compensation shall be made therefore.

BID ITEM NO. 16 – PUMP STATION INTERIOR DEMOLITION The lump sum bid price for Pump Station Interior Demolition shall include: demolition of the conductor gallery, LPG engine, pump and ancillary piping and valves, engine controller, 8” piping and valves, 2” copper water line and existing motor starters.

Contractor may apply for payment of Pump Station Interior Demolition on a percent complete basis as the items covered in Pump Station Interior Demolition are being completed. Payment for Pump Station Interior Demolition will be made at the lump sum price named in the Bid Schedule under Item 16, and no additional compensation shall be made therefore.

BID ITEM NO. 17 – PUMP STATION PIPING The lump sum bid for Pump Station Piping shall include: new 8” DIP piping in the pump station room, valves and appurtenances.

Contractor may apply for payment of Pump Station Piping work on a percent complete basis as the items covered in the Pump Station Piping are being completed. Payment for Pump Station Piping will be made at the lump sum price named in the Bid Schedule under Item 17 and no additional compensation shall be made therefore.

BID ITEM NO. 18 – STANDBY GENERATOR The bid price for Standby Generator shall include: new standby generator.

Contractor may apply for payment of Standby Generator on a percent complete basis as the items covered in Standby Generator are being completed. Payment for Standby Generator will be made

at the unit price named in the Bid Schedule under Item 18, and no additional compensation shall be made therefore.

BID ITEM NO. 19 – BUILDING ANNEX The bid price for Building Annex shall include: new generator building annex including foundation, all associated mechanical and electrical components for a complete building, signage and safety equipment.

Contractor may apply for payment of Building Annex on a percent complete basis as the items covered in Building Annex are being completed. Payment for Building Annex will be made at the lump sum price named in the Bid Schedule under Item 19, and no additional compensation shall be made therefore.

BID ITEM NO. 20 – MCC, ATS, ELECTRICAL EQUIPMENT The bid price for MCC, ATS, Electrical Equipment shall include: the new motor control center, automatic transfer switch, reduced voltage soft start panels, lighting panels, instrument cabinets, transformer and lighting associated with the electrical equipment in the existing pump room.

Contractor may apply for payment of MCC, ATS, Electrical Equipment on a percent complete basis as the items covered in MCC, ATS, Electrical Equipment are being completed. Payment for MCC, ATS, Electrical Equipment will be made at the unit price named in the Bid Schedule under Item 20, and no additional compensation shall be made therefore.

BID ITEM NO. 21 – SITE ELECTRICAL AND SCADA IMPROVEMENTS The bid price for Site Electrical and SCADA Improvements shall include: relocation of the existing service feed and associated coordination with the power Utility (Silicon Valley Power), new and relocated conduits, wiring and other electrical appurtenances associated with the new and relocated electrical equipment, instruments and new generator location, and SCADA integration of the new improvements required.

Contractor may apply for payment of Standby Generator on a percent complete basis as the items covered in Standby Generator are being completed. Payment for Standby Generator will be made at the unit price named in the Bid Schedule under Item 21, and no additional compensation shall be made therefore.

END OF SECTION

THIS PAGE

WAS INTENTIONALLY

LEFT BLANK

SECTION 01250

MODIFICATION PROCEDURES

PART 1 GENERAL

1.1 SUMMARY

A. Section includes:

1. Description of general procedural requirements for alterations, modifications, and extras.

1.2 GENERAL

A. Any change in scope of Work or deviation from Contract Documents including, without limitation, extra work, or alterations or additions to or deductions from the original Work, shall not invalidate the original Contract, and shall be performed under the terms of the Contract Documents.

B. Only Contractor or City may initiate changes in scope of Work or deviation from Contract Documents.

1. Contractor may initiate changes by submitting Requests for Information ("RFIs"), Notice of Concealed or Unknown Conditions, or Notice of Hazardous Waste Conditions.

   a. RFIs shall be submitted to seek clarification of or request changes in the Contract Documents.
   b. Notices of Concealed or Unknown Conditions shall be submitted in accordance with Document 00700, General Conditions.
   c. Notices of Hazardous Waste Conditions shall be submitted in accordance with Document 00700, General Conditions.

2. Contractor shall be responsible for its costs to implement and administer RFIs throughout the Contract duration. Regardless of the number of RFIs submitted, Contractor shall not be entitled to additional compensation. Contractor shall be responsible for both City and its Engineer's administrative costs for answering RFIs where the answer could reasonably be found by reviewing the Contract Documents, as determined by City; at City's discretion, such costs may be deducted from progress payments or final payment.

3. City may issue a Supplemental Instruction to clarify the Contract Documents.

4. City may initiate changes in the Work or Contract Time by issuing Requests for Proposals ("RFPs") to Contractor. Such RFPs will detail all proposed changes in the Work and request a quotation of changes in Contract Sum and Contract Time from Contractor.

///

///

///

5. City may also, by Construction Change Directive ("CCD"), order changes in the Work within the general scope of the Contract consisting of additions, deletions, or other revisions, the Contract Sum and Contract Time being adjusted accordingly. A CCD shall be used in the absence of total agreement on the terms of a Change Order and may, upon notice, consist of a Change Order executed by City only.

1.3 PROCEDURES

A. Cost Proposal and Procedures: Whenever Contractor is required in this Section 01250 to prepare a Cost Proposal, and whenever Contractor is entitled to submit a Cost Proposal and elects to do so, Contractor shall prepare and submit to City for consideration a Cost Proposal using a form acceptable to the City. All Cost Proposals must contain a complete breakdown of costs of credits, deducts and extras; itemizing materials, labor, taxes, overhead and profit. All Subcontractor Work shall be so indicated. Individual entries on the Cost Proposal form shall be determined as provided in paragraphs 1.4 and 1.5 of this Section 01250. After receipt of a Cost Proposal with a detailed breakdown, City will act promptly thereon.

1. If City accepts a Cost Proposal, City will prepare Change Order for Contractor and City signatures.

2. If Cost Proposal is not acceptable to City because it does not agree with cost and/or time included in Cost Proposal, City will submit in a response what it believes to be a reasonable cost and/or adjustment, if any. Except as otherwise provided in this Section 01250, Contractor shall have seven Days in which to respond to City with a revised Cost Proposal.

3. When necessity to proceed with a change does not allow the City sufficient time to conduct a proper check of a Cost Proposal (or revised Cost Proposal), City may order Contractor to proceed on basis to be determined at earliest practical date. In this event, value of change, with corresponding equitable adjustment to Contract, shall not be more than increase or less than decrease proposed.

B. Request for Information ("RFI"): Whenever Contractor requires information regarding the Project or Contract Documents, or receives a request for information from a Subcontractor, Contractor may prepare and deliver an RFI to City. Contractor shall use an RFI form acceptable to the City. Contractor must submit time critical RFIs at least 30 Days before scheduled start date of the affected Work activity. Contractor shall reference each RFI to an activity of Progress Schedule and shall note time criticality of the RFI, indicating time within which a response is required. Contractor's failure to reference RFI to an activity on the Progress Schedule and note time criticality on the RFI shall constitute Contractor's waiver of any claim for time delay or interruption to the Work resulting from any delay in responding to the RFI.

1. City will respond to the RFI with a written response to Contractor. Contractor shall distribute response to all appropriate Subcontractors.

2. If Contractor is satisfied with the response and does not request change in Contract Sum or Contract Time, then the response shall be executed without a change.

///

3. If Contractor believes the response is incomplete, Contractor shall issue another RFI (with the same RFI number with the letter "A" indicating if it is a follow-up RFI) to City clarifying original RFI. Additionally, City may return RFI requesting additional information should original RFI be inadequate in describing condition.

4. If Contractor believes that the response results in change in Contract Sum or Contract Time, Contractor shall notify City in writing within seven Days after receiving the response. If City disagrees with Contractor, then Contractor may give notice of intent to submit a Claim as described in Article 12 of Document 00700 (General Conditions), and submit its Claim within 30 Days of receiving the City's decision. If City agrees with Contractor, then Contractor must submit a Cost Proposal within 14 Days of receiving the City's decision. Contractor's failure to deliver either the foregoing notice and Claim or Cost Proposal by the respective deadlines stated in the foregoing sentences shall result in waiver of the right to file a Cost Proposal or Claim.

C. Supplemental Instruction: City may issue Supplemental Instruction to Contractor.

1. If Contractor is satisfied with Supplemental Instruction and does not request change in Contract Sum or Contract Time, then Supplemental Instruction shall be executed without a Change Order.

2. If Contractor believes that Supplemental Instruction results in change in Contract Sum or Contract Time, then Contractor must submit a Cost Proposal to City within 14 Days of receiving the Supplemental Instruction.

D. Construction Change Directives ("CCD"): If at any time City believes in good faith that a timely Change Order will not be agreed upon using the foregoing procedures, City may issue a CCD with its recommended cost and/or time adjustment. Upon receipt of CCD, Contractor shall promptly proceed with the change of Work involved and concurrently respond to City's CCD within 10 Days.

1. Contractor's response must be any one of following:

   a. Return CCD signed, thereby accepting City's response, time and cost.
   b. Submit a (revised if applicable) Cost Proposal with supporting documentation (if applicable, reference original Cost Proposal number followed by letter A, B, etc. for each revision), if City so requests.
   c. Give notice of intent to submit a Claim as described in Article 12 of Document 00700, General Conditions, and submit its Claim with 30 Days of receiving the CCD.

2. If the CCD provides for an adjustment to the Contract Sum, the adjustment shall be based on one of the following methods:

   a. Mutual acceptance of a lump sum properly itemized and supported by sufficient substantiating data to permit evaluation.
   b. Unit prices stated in the Contract Documents or subsequently agreed upon.
   c. Cost to be determined in a manner agreed.

///

3. CCD signed by Contractor indicates the agreement of Contractor therewith, including adjustment in Contract Sum and Contract Time or the method for determining them. Such agreement shall be effective immediately and shall be recorded as a Change Order.

4. If Contractor does not respond promptly or disagrees with the method for adjustment in the Contract Sum, the method and the adjustment shall be determined by City on the basis of reasonable expenditures and savings of those performing the Work attributable to the change including, in case of an increase in the Contract Sum, a reasonable allowance for overhead and profit. If the parties still do not agree on the price for a CCD, Contractor may file a Claim per Article 12 of Document 00700, General Conditions. Contractor shall keep and present, in such form as City may prescribe, an itemized accounting together with appropriate supporting data. Unless otherwise provided in the Contract Documents, costs for the purposes of this paragraph shall be limited to those provided in paragraphs 1.4 and 1.5 of this Section 01250.

5. Pending final determination of cost to City, amounts not in dispute may be included in Applications for Payment. The amount of credit to be allowed by Contractor to City for a deletion or change which results in a net decrease in the Contract Sum shall be actual net cost as confirmed by City. When both additions and credits covering related Work or substitutions are involved in a change, the allowance for overhead and profit shall be figured on the basis of net increase, if any, with respect to that change.

E. City Requested RFP: Contractor shall furnish a Cost Proposal within 14 Days of receiving the City's RFP. Upon approval of RFP, City will issue a Change Order directing Contractor to proceed with extra Work. If the parties do not agree on the price for an RFP, City may either issue a CCD or decide the issue per Article 12 of Document 00700, General Conditions. Contractor shall perform the changed Work notwithstanding any claims or disagreements of any nature.

F. Differing Site Conditions: Contractor shall submit Notices of Differing Site Conditions to resolve problems regarding differing underground Site conditions encountered in the execution of the Work pursuant to paragraph 13.4 of Document 00700, General Conditions, which shall govern. If City determines that a change in Contract Sum or Contract Time is justified, City will issue RFP or CCD.

G. Hazardous Waste Conditions: Contractor shall submit Notices of Hazardous Waste Conditions to resolve problems regarding hazardous materials encountered in the execution of the Work pursuant to paragraph 13.5 of Document 00700, General Conditions, which shall govern. If City determines that a change in Contract Sum or Contract Time is justified, City will issue RFP or CCD.

H. All Changes:

1. Documentation of Change in Contract Sum and Contract Time:

   a. Contractor shall maintain detailed records of Work performed on a time-and-material basis.
   b. Contractor shall document each proposal for a change in cost or time with sufficient data to allow evaluation of the proposal.

c. Contractor shall, on request, provide additional data to support computations for:
   1) Quantities of products, materials, labor and equipment.
   2) Taxes, insurance, and bonds.
   3) Overhead and profit.
   4) Justification for any change in Contract Time and new Progress Schedule showing revision due, if any.
   5) Credit for deletions from Contract, similarly documented.

d. Contractor shall support each claim for additional costs, and for Work performed on a cost-and-percentage basis, with additional information including:
   1) Credit for deletions from Contract, similarly documented.
   2) Origin and date of claim.
   3) Dates and times Work was performed and by whom.
   4) Time records and wage rates paid.
   5) Invoices and receipts for products, materials, equipment and subcontracts, similarly documented.

I. Correlation of Other Items:

1. Contractor shall revise Schedule of Values and Application for Payment forms to record each authorized Change Order or CCD as a separate line item and adjust the Contract Sum as shown thereon prior to the next monthly pay period.

2. Contractor shall revise the Progress Schedules prior to the next monthly pay period.

3. Contractor shall enter changes in Project Record Documents prior to the next monthly pay period.

J. Responses: For all responses for which the Contract Documents, including without limitation this Section 1250, do not provide a specific time period, recipients shall respond within a reasonable time.

1.4 COST DETERMINATION

A. Total cost of extra Work or of Work omitted shall be the sum of labor costs, material costs, equipment rental costs and specialist costs as defined herein plus overhead and profit as allowed herein. This limit applies in all cases of claims for extra Work, whether calculating Cost Proposals, Change Orders or CCDs, or calculating claims of all types, and applies even in the event of fault, negligence, strict liability, or tort claims of all kinds, including strict liability or negligence. Contractor may recover no other costs arising out of or connected with the performance of extra Work, of any nature. No special, incidental or consequential damages may be claimed or recovered against City, its representatives or agents, whether arising from breach of contract, negligence or strict liability, unless specifically authorized in the Contract Documents.

B. Overhead and Profit: (Overhead shall be as defined in paragraph 1.8 of this Section 01250)

1. Overhead and profit on labor for extra Work shall be 15 percent (15%).

2. Overhead and profit on materials for extra Work shall be 15 percent (15%).

3. Overhead and profit on equipment rental for extra Work shall be 10 percent (10%).

4. When extra Work is performed by a Subcontractor, Contractor shall receive a 5 percent (5%) markup on Subcontractor's total costs of extra Work. Subcontractor's overhead and profit on its Work shall not exceed 10 percent (10%).

5. When extra Work is performed by a lower tier Subcontractor, Contractor shall receive a maximum total markup of 5 percent (5%) and the Subcontractor shall receive a maximum total markup of five percent (5%) on the lower tier Subcontractor's total costs of extra Work. The total sum of overhead, profit, and markup for all lower tier Subcontractors shall not exceed 10 percent (10%).

6. Notwithstanding the foregoing, in no case shall the total overhead, profit, and markup on any extra Work exceed 20 percent (20%) of the direct cost, notwithstanding the actual number of contract tiers.

7. On proposals covering both increases and decreases in Contract Sum, overhead, profit, and markup shall be allowed on the net increase only as determined in paragraph 1.4 above. When the net difference is a deletion, no percentage for overhead, profit, and markup shall be allowed, but rather a deduction shall issue.

8. The markup shall include profit, small tools, cleanup, engineering, supervision, warranties, cost of preparing the cost proposal, jobsite overhead, and home office overhead. No markup will be allowed on taxes, insurance, and bonds.

C. Taxes, Bonds, and Insurance:

1. All State sales and use taxes, Santa Clara County and applicable City sales taxes, shall be included.

2. Federal and Excise tax shall not be included.

3. The Contractor's Bond and Insurance costs on Subcontractors shall be shown separately and applied to the work by Subcontractors and is not included in the 5 percent (5%) markup limitations, nor included in the 15 percent (15%) limitation for the Contractor. The Contractor must provide written support documentation to justify any bond and insurance costs, but the sum of the bond and insurance costs shall not exceed 1.75 percent (1.75%) for the Contractor. Bond and Insurance costs for Subcontractor and any lower tier Subcontractor are included in the limitations for overhead, profit, and markup.

D. Owner-Operated Equipment: When owner-operated equipment is used to perform extra Work, Contractor will be paid for operator as follows:

1. Payment for equipment will be made in accordance with paragraph 1.5C of this Section 01250.

2. Payment for cost of labor will be made at no more than rates of such labor established by collective bargaining agreements for type of worker and location of Work, whether or not owner-operator is actually covered by such an agreement.

E. Accord and Satisfaction: Every Change Order and accepted CCD shall constitute a full accord and satisfaction, and release, of all Contractor (and if applicable, Subcontractor) claims for additional time, money or other relief arising from or relating to the subject matter of the change including, without limitation, impacts of all types, cumulative impacts, inefficiency, overtime, delay and any other type of claim. Contractor may elect to reserve its rights to disputed claims arising from or relating to the changed Work at the time it signs a Change Order or approves a CCD, but must do so expressly in a writing delivered concurrently with the executed Change Order or approved CCD, and must also submit a Claim for the reserved disputed items pursuant to Article 12 of Document 00700 no later than 30 days of Contractor's first written notice of its intent to reserve rights.

1.5 COST BREAKDOWN

A. Labor: Contractor will be paid cost of labor for workers (including forepersons when authorized by City) used in actual and direct performance of extra Work. Labor rate, whether employer is Contractor, Subcontractor or other forces, will be sum of following:

1. Actual Wages: Actual wages paid shall include any employer payments to or on behalf of workers for health and welfare, pension, vacation, and similar purposes.

2. Labor surcharge: Payments imposed by local, county, state, and federal laws and ordinances, and other payments made to, or on behalf of, workers, other than actual wages as defined in paragraph 1.5A.1 of this Section 01250, such as taxes and worker's compensation insurance. Such labor surcharge shall not exceed that set forth in California Department of Transportation official labor surcharges schedule which is in effect on date upon which extra Work is accomplished and which schedule is incorporated herein by reference as though fully set forth herein.

B. Material: Only materials furnished by Contractor and necessarily used in performance of extra Work will be paid for. Cost of such materials will be cost, including sales tax, to purchaser (Contractor, Subcontractor or other forces) from supplier thereof, except as the following are applicable:

1. If cash or trade discount by actual supplier is offered or available to purchaser, it shall be credited to City notwithstanding fact that such discount may not have been taken.

2. For materials salvaged upon completion of extra Work, salvage value of materials shall be deducted from cost, less discounts, of materials.

3. If cost of a material is, in opinion of City, excessive, then cost of material shall be deemed to be lowest current wholesale price at which material is available in quantities concerned delivered to Site, less any discounts as provided in paragraph 1.5B.1 of this Section 01250.

///

///

///

///

C. Equipment Rental: For Contractor- or Subcontractor-owned equipment, payment will be made at rental rates listed for equipment in California Department of Transportation official equipment rental rate schedule which is in effect on date upon which extra Work is accomplished and which schedule is incorporated herein by reference as though fully set forth herein. If there is no applicable rate for an item of equipment, then payment shall be made for Contractor- or Subcontractor-owned equipment at rental rate listed in the most recent edition of the Association of Equipment Distributors (AED) book. For rented equipment, payment will be made based on actual rental invoices. Equipment used on extra Work shall be of proper size and type. If, however, equipment of unwarranted size or type and cost is used, cost of use of equipment shall be calculated at rental rate for equipment of proper size and type, as determined by City. Rental rates paid shall be deemed to cover cost of fuel, oil, lubrication, supplies, small tools, necessary attachments, repairs and maintenance of any kind, depreciation, storage, insurance, and all incidentals. Unless otherwise specified, manufacturer's ratings, and manufacturer-approved modifications, shall be used to classify equipment for determination of applicable rental rates. Individual pieces of equipment or tools not listed in said publication and having a replacement value of $200 or less, whether or not consumed by use, shall be considered to be small tools and no payment will be made therefore as payment is included in payment for labor. Rental time will not be allowed while equipment is inoperative due to breakdowns.

1. For equipment on Site, rental time to be paid for equipment shall be time equipment is in operation on extra Work being performed or on standby as approved by City. The following shall be used in computing rental time of equipment:
   a. When hourly rates are listed, less than 30 minutes of operation shall be considered to be ½ hour of operation.
   b. When daily rates are listed, less than four hours of operation shall be considered to be ½ day of operation.

2. For equipment that must be brought to Site to be used exclusively on extra Work, cost of transporting equipment to Site and its return to its original location shall be determined as follows:
   a. City will pay for costs of loading and unloading equipment.
   b. Cost of transporting equipment in low bed trailers shall not exceed hourly rates charged by established haulers.
   c. Cost of transporting equipment shall not exceed applicable minimum established rates of California Public Utilities Commission.
   d. City will not make any payment for transporting and loading and unloading equipment if equipment is used on Work in any other way than upon extra Work.

3. Rental period may begin at time equipment is unloaded at Site of extra Work and terminate at end of the performance of the extra Work or Day on which City directs Contractor to discontinue use of equipment, whichever first occurs. Excluding Saturdays, Sundays, City's furlough days, and City's legal holidays, unless equipment is used to perform extra Work on such days, rental time to be paid per day shall be four (4) hours for zero (0) hours of operation, six (6) hours for four (4) hours of operation and eight (8) hours for eight (8) hours of operation, time being prorated between these parameters. Hours to be paid for equipment that is operated less than eight (8) hours due to breakdowns, shall not exceed eight (8) less number of hours equipment is inoperative due to breakdowns.

///

D. Work Performed by Special Forces or Other Special Services: When City and Contractor, by agreement, determine that special service or item of extra Work cannot be performed by forces of Contractor or those of any Subcontractors, service or extra Work item may be performed by specialist. Invoices for service or item of extra Work on basis of current market price thereof may be accepted without complete itemization of labor, material, and equipment rental costs when it is impracticable and not in accordance with established practice of special service industry to provide complete itemization. In those instances wherein Contractor is required to perform extra Work necessitating a fabrication or machining process in a fabrication or machine shop facility away from Site, charges for that portion of extra Work performed in such facility may, by agreement, be accepted as a specialist billing. City must be notified in advance of all off-Site Work. In lieu of overhead and profit provided in paragraph 1.4B of this Section 01250, 15 percent (15%) will be added to specialist invoice price, after deduction of any cash or trade discount offered or available, whether or not such discount may have been taken.

1.6 FORCE-ACCOUNT WORK

A. If it is impracticable because of nature of Work, or for any other reason, to fix an increase or decrease in price definitely in advance, the Contractor may be directed to proceed at a not-to-exceed (NTE) maximum price which shall not under any circumstances be exceeded. Subject to such limitation, such extra Work shall be paid for at actual necessary cost for Force-Account Work or at the negotiated cost, as determined by City. The cost for Force-Account Work shall be determined pursuant to paragraphs 1.4 and 1.5 of this Section 01250.

B. Force-Account Work shall be used when it is not possible or practical to price out the changed Work prior to the start of that Work. In these cases, Force-Account Work will be utilized during the pricing and negotiation phase of the change. Once negotiations have been concluded and a bilateral agreement has been reached, the tracking of the Work under Force-Account is no longer necessary. Force-Account Work shall also be used when negotiations between City and Contractor have broken apart and a bilateral agreement on the value of the changed Work cannot be reached. City may approve other uses of Force-Account Work.

C. Whenever any Force-Account Work is in progress, definite price for which has not been agreed on in advance, Contractor shall report to City each Day in writing in detail amount and cost of labor and material used, and any other expense incurred in Force-Account Work on preceding Day, by using a Cost Proposal form acceptable to the City. No claim for compensation for Force-Account Work will be allowed unless a report has been made.

D. Whenever Force-Account Work is in progress, definite price for which has not been agreed on in advance, Contractor shall report to City when 75 percent (75%) of the NTE amount has been expended.

E. Force-Account Work shall be paid as extra Work under this Section 01250. Methods of determining payment for Work and materials provided in this paragraph 1.6 shall not apply to performance of Work or furnishings of material that, in judgment of City, may properly be classified under items for which prices are otherwise established in Contract Documents.

1.7 CITY-FURNISHED MATERIALS

City reserves right to furnish materials as it deems advisable, and Contractor shall have no claims for costs and overhead and profit on such materials.

1.8 OVERHEAD DEFINED

A. The following non-exclusive list constitutes charges that are deemed included in overhead for all Contract Modifications, including Force-Account Work or CCD Work, whether incurred by Contractor, Subcontractors, or suppliers, and Contractor shall not invoice or receive payment for these costs separately:

1. Cartage and Vetical transportation (Elevators, Vertical Resource Lifts, etc.)

2. Cleanup as a result of change order work

3. Computer services
   a. De-bugging
   b. Patching
   c. Programming
   d. Protecting (i.e., anti-virus and firewall applications)

4. Consumables and attrition

5. Drawings: field drawings, Shop Drawings, sketches, etc., including submissions of drawings

6. Employee vehicle and gas expenses

7. Estimating

8. Final cleanup

9. General administration and preparation of cost proposals, schedule analysis, change orders and other supporting documentation as necessary

10. General Superintendence

11. Handling and disposal fees

12. Home office expenses

13. Janitorial services

14. Parking expenses of any field labor, foreman, office personnel, and superintendents

15. Procurement and use of vehicles and fuel used coincidentally in base bid Work.

16. Protection of work

17. Reproduction services

18. Routine field inspection of Work proposed

19. Salaries of project engineer, superintendent, timekeeper, storekeeper, administrative assistants, and secretaries

20. Small tools and equipment valued at less than $200

21. Insurance and Bond Premiums/Costs

22. Surveying

23. Temporary on-Site facilities:
    a. Electrical: Power, lighting
    b. Fencing, etc.
    c. Offices
    d. Platforms
    e. Plumbing
    f. Telephones, etc.
    g. Water

24. Testing

25. Traveling expenses

26. Trucking within 50 miles of the Project Site

27. Other incidental work

1.9 RECORDS AND CERTIFICATION

A. Force-Account (cost reimbursement) charges shall be recorded daily and summarized in a form acceptable to the City. Contractor or authorized representative shall complete and sign the form each day. Contractor shall also provide with the form: the names and classifications of workers and hours worked by each; an itemization of all materials used; a list by size type and identification number of equipment and hours operated; and an indication of all Work performed by specialists.

B. No payment for Force-Account Work shall be made until Contractor submits original invoices substantiating materials and specialists charges.

C. City shall have the right to audit all records in possession of Contractor, Subcontractors, and lower tier Subcontractors relating to activities covered by Contractor's claims for modification of Contract, including Force-Account Work and CCD Work, as set forth in Document 00700, General Conditions.

///

///

///

///

D. Further, City will have right to audit, inspect, or copy all records maintained in connection with this Contract, including financial records, in possession of Contractor relating to any transaction or activity occurring or arising out of, or by virtue of, the Contract. If Contractor is a joint venture, right of City shall apply collaterally to same extent to records of joint venture sponsor, and of each individual joint venture member. This right shall be specifically enforceable, and any failure of Contractor to voluntarily comply shall be deemed an irrevocable waiver and release of all claims then pending that were or could have been subject to the Article 12 of Document 00700.

END OF SECTION

SECTION 01315

PROJECT MEETINGS

PART 1 GENERAL

1.1 SUMMARY

A. This Section includes descriptions of the required Project meetings for the Work. These meetings include:

1.2 Preconstruction Conference.
1.3 Schedule Review Meetings
1.4 Weekly Progress Meetings.
1.5 Progress Schedule and Billing Meetings.
1.6 Special Meetings.
1.7 Safety Meetings.
1.8 Utility Coordination Meetings.

1.2 PRECONSTRUCTION CONFERENCE

A. City may call for and administer the Preconstruction Conference at a time and place to be announced (usually the week prior to start of Work).

B. Contractor, all major Subcontractors, and major suppliers shall attend the Preconstruction Conference.

C. Agenda may include, but not be limited to, the following items:

1. Schedules

2. Personnel and vehicle permit procedures

3. Use of premises

4. Location of the Contractor’s on-Site facilities

5. Security

6. Housekeeping

7. Submittal and RFI procedures

8. Inspection and testing procedures

9. Utility shutdown procedures

10. Control and reference point survey procedures

11. Injury and Illness Prevention Program

12. Contractor's Initial Schedule, showing all significant Work tasks, including the Critical Path

13 Contractor's Schedule of Values

14. Contractor's Schedule of Submittals

D. If a Preconstruction Conference is held, the City may produce minutes. If minutes are produced, the City may distribute copies of the minutes to attendees. Attendees shall have 7 Days to submit comments or additions to the minutes. Minutes, if produced by the City, shall constitute final memorialization of results of the Preconstruction Conference.

1.3 SCHEDULE REVIEW MEETINGS

A. If called by the City, Contractor shall meet with City prior to Start Date of the Work under Contract Documents and conduct initial review of Contractor's draft Shop Drawing and Sample Submittal Schedule, draft Schedule of Values, and Initial Schedule.

B. Authorized representative in Contractor's organization, designated in writing, who will be responsible for working and coordinating with City relative to preparation and maintenance of Progress Schedule shall attend the initial schedule review meeting .

C. Contractor shall meet with City to review the Progress Schedule and construction schedule submittals.

1. Contractor shall have its manager, superintendent, scheduler, and key Subcontractor representatives, as required by City, in attendance. The meeting will take place over a continuous one-Day period.

2. City's review will be limited to submittal's conformance to Contract Documents requirements including, but not limited to, coordination requirements. City's review may also include:
   a. Clarifications of Contract Requirements.
   b. Directions to include activities and information missing from submittal.
   c. Requests to Contractor to clarify its schedule.

3. Within 5 Days of the Schedule Review Meeting, Contractor shall respond in writing to all questions and comments expressed by City at the meeting.

D. City will administer Schedule Review Meetings and shall distribute minutes of Schedule Review Meetings to attendees. Attendees shall have 5 Days to submit comments or additions to minutes. Minutes will constitute final memorialization of results of Schedule Review Meetings.

E. City may combine the Schedule Review Meeting with the Preconstruction Conference.

1.4 WEEKLY PROGRESS MEETINGS

A. City has the option to schedule and administer weekly progress meetings throughout duration of Work. Progress meetings will be held weekly unless otherwise directed by City.

1. Meetings shall be held at Contractor's on-Site office unless otherwise directed by City.

2. City or Contractor, if directed by City, will prepare an agenda and meeting minutes.

3. City or Contractor, if directed by City, will distribute minutes of the meeting to all attendees, who will distribute to those affected by decisions made at meeting. Attendees can either submit comments or additions to minutes prior to the next progress meeting, or may attend the next progress meeting and submit comments or additions there. Minutes will constitute final memorialization of results of meeting.

B. Progress meetings shall be attended by Contractor's job superintendent, major Subcontractors and suppliers, City, and others as appropriate to agenda topics for each meeting.

C. Agenda may contain, but is not limited to, the following items, as appropriate:

1. Review, revise as necessary, and approve previous meeting minutes

2. Review of Work progress since last meeting

3. Status of Construction Work Schedule, delivery schedules, adjustments

4. Submittal, RFI, and Change Order status

5. Review of the Contractor's safety program activities and results, including report on all serious injury and/or damage accidents

6. Other items affecting progress of Work

1.5 PROGRESS SCHEDULE AND BILLING MEETINGS

A. A meeting will be held on approximately the 25th of each month to review the schedule update submittal and progress payment application.

1. At this meeting, at a minimum, the following items will be reviewed:
   a. Percent complete of each activity;
   b. Time impact evaluations for Change Orders and Time Extension Request;
   c. Actual and anticipated activity sequence changes;
   d. Actual and anticipated duration changes; and
   e. Actual and anticipated Contractor delays.
   f. Status of Project Record Drawings, see Section 01780, Project Record Documents.

2. These meetings are considered a critical component of overall monthly schedule update submittal and Contractor shall have appropriate personnel attend. At a minimum, Contractor's General Superintendent and Scheduler shall attend these meetings.

3. Contractor shall plan on the meeting taking no less than four hours.

1.6 SPECIAL MEETINGS

A. Any party may call special meetings by notifying all desired participants and City 5 Days in advance, giving reason for meeting. Special meetings may be held without advance notice in emergency situations.

B. At any time during the progress of Work, City shall have authority to require Contractor attend meeting of any or all of the Subcontractors engaged in Work or in other work, and notice of such meeting shall be duly observed and complied with by Contractor.

C. Contractor shall schedule and conduct coordination meetings as necessary to discharge coordination responsibilities in Document 00700, General Conditions. Contractor shall give City 5 Days written notice of coordination meetings. Contractor shall maintain minutes of coordination meetings. Attendees shall have 7 Days to submit comments or additions to minutes. Minutes will constitute final memorialization of results of coordination meetings.

1.7 SAFETY MEETINGS

A. Conduct monthly Contractor Safety Committee meetings.

B. Conduct weekly toolbox safety talks.

1.8 UTILITY COORDINATION MEETINGS

A. Contractor shall plan, coordinate and schedule meetings with all utility companies and City forces installing utilities. The City's Construction Manager and the Engineer shall be invited to attend these meetings and the Contractor shall be responsible for presiding at these meetings, as well as preparing and distributing meeting minutes within 3 work days of each meeting. Additional requirements regarding the coordination and scheduling of utility work by others is included, but not limited to, Section 01100, Summary of Work, Document 00700, General Conditions, and the Contract Drawings.

END OF SECTION

SECTION 01320

PROGRESS SCHEDULES AND REPORTS

PART 1 GENERAL

1.1 SUMMARY

A. Perform scheduling of Work under this Contract in accordance with requirements of this Section 01320.

1. Development of schedule, cost, and resource loading of the Progress Schedule, monthly payment requests, and project status reporting requirements of the Contract Documents shall employ scheduling as required in this Section 01320.

2. The Schedule shall be cost-loaded based on Schedule of Values as approved by City.

3. Submit schedules and reports as specified in 00700, General Conditions.

B. Upon Award of Contract, immediately commence development of Initial Schedule to ensure compliance with schedule submittal requirements.

C. Contractor's obligations under this Section 01320 are hereby deemed material obligations justifying City's remedies for default if Contractor fails to perform. Nothing in this paragraph 1.1.C of this Section 01320 or the lack of an express statement that any other Contract Documents provision is or is not material shall be considered in determining whether any such other provision is material.

D. Employ competent scheduling personnel or a schedule consultant with experience performing scheduling required herein on two prior similar projects.

1.2 GENERAL

A. Progress Schedule shall be based on and incorporate milestone and completion dates specified in Contract Documents.

B. Overall time of completion and time of completion for each milestone shown on Progress Schedule shall adhere to times in Document 00520, Agreement, unless an earlier (advanced) time of completion is requested by Contractor and agreed to by City. A Change Order shall formalize any such agreement.

1. City is not required to accept an earlier (advanced) schedule (i.e., one that shows early completion date(s) for the Contract Time).

2. Contractor is not entitled to extra compensation in event agreement is reached on an earlier (advanced) schedule and Contractor completes its Work, for whatever reason, beyond completion date shown in earlier (advanced) schedule but within the Contract Time.

3. A schedule showing the Work completed in less than the Contract Time, which has been accepted by City, shall be considered to have Project Float. The Project Float is the time between the scheduled completion of the Work and Contract Substantial Completion. Project Float is a resource available to both City and Contractor.

4. Float Ownership: Neither City nor Contractor owns float. The Project owns the float. As such, liability for delay of any Substantial Completion or Final Completion date rests with the party whose actions, last in time, actually cause delay to a Substantial Completion or Final Completion date.
   a. For example, in the event of unexcused delay by Party A and Party B, and if Party A uses some, but not all of the float and Party B later uses remainder of the float as well as additional time beyond the float, Party B shall be liable for the time that represents a delay to the Substantial Completion date.
   b. Under this scenario, Party A would not be responsible for the time since it did not consume all of the float and additional float remained; therefore, the Substantial Completion Date was unaffected.

C. Progress Schedule shall be the basis for evaluating job progress, payment requests, and time extension requests. Responsibility for developing Contract schedule and monitoring actual progress as compared to Progress Schedule rests with Contractor.

D. Failure of Progress Schedule to include any element of the Work or any inaccuracy in Progress Schedule will not relieve Contractor from responsibility for accomplishing the Work in accordance with the Contract. City's acceptance of Schedule shall be for its use in monitoring and evaluating job progress, payment requests, and time extension requests, and shall not, in any manner, impose a duty of care upon City, or act to relieve Contractor of its responsibility for means and methods of construction.

E. Transmit each item under form approved by City or following Section 01330.

1. Identify Project with the City Contract number, and name of Contractor.

2. Provide space for Contractor's approval stamp and City's review stamps.

3. Submittals received from sources other than Contractor will be returned to Contractor without City's review.

1.3 INITIAL AND ORIGINAL PROGRESS SCHEDULE

A. Initial Schedule submitted in accordance with paragraph 11.1.B of Document 00700, General Conditions, shall serve as Contractor's schedule for up to 30 Days after the Notice to Proceed.

B. Initial Schedule must indicate detailed plan for the Work to be completed in first 30 Days of the Contract; details of planned mobilization of plant and equipment; sequence of early operations; and procurement of materials and equipment. Show Work beyond 30 Days in summary form.

C. Contractor shall submit its Original Schedule for review no later than first progress payment. Original Schedule and all updates shall comply with all standards herein.

D. All Schedules shall be time-scaled.

E. All Schedules shall be cost- and resource-loaded. Accepted cost- and resource-loaded Schedule will be used as basis for monthly progress payments. Use of Initial Schedule for progress payments shall not exceed 30 Days.

F. Except as otherwise expressly provided in this Section 01320, Contractor shall meet with City to review and discuss each Schedule (i.e., Initial, Original, and monthly updates) within seven Days after each Schedule has been submitted to City.

1. City's review and comment on any Schedule shall be limited to Contract conformance (with sequencing, coordination, and milestone requirements).

2. Contractor shall make corrections to Schedule necessary to comply with Contract requirements and shall adjust Schedule to incorporate any missing information requested by City. Resubmit Initial Schedule if requested by City.

G. If Contractor is of the opinion that any of the Work included on its Schedule has been impacted, submit to City a written Time Impact Evaluation ("TIE") in accordance with paragraph 1.8 of this Section 01320. The TIE shall be based on the most current update of the Initial Schedule.

1.4 SCHEDULE FORMAT AND LEVEL OF DETAIL

A. Each Schedule (Initial, Original, and updates) shall indicate all separate fabrication, procurement and field construction activities required for completion of the Work, including but not limited to the following:

1. All Contractor, Subcontractor, and assigned Contractor work shall be shown in a logical work sequence that demonstrates a coordinated plan of work for all contractors. The intent is to provide a common basis of acceptance, understanding, and communication, as well as interface with other contractors.

2. Activities related to the delivery of Contractor and City-furnished equipment to be Contractor-installed per Contract shall be shown.

3. All activities shall be identified through codes or other identification to indicate the building (i.e., buildings, Site work) and Contractor/Subcontractor responsibility to which they pertain.

4. Break up the Work schedule into activities of durations of approximately 21 Days or less each, except for non-field construction activities or as otherwise deemed acceptable by City.

5. Show the critical path in red. For each activity, show early start, late start, early finish, late finish, durations measured in Days, float, resources, predecessor and successor activities, planned workday/week for the activity, man power loading, and scheduled/actual progress payments.

B. Seasonal weather conditions (which do not constitute a delay as defined herein) shall be considered in the planning and scheduling of all work influenced by high or low ambient temperatures or presence of high moisture for the completion of the Work within the allotted Contract Time.

C. Failure by Contractor to include any element of Work required for performance of the Work on the detailed construction schedule shall not excuse Contractor from completing all Work required within the Contract Time.

D. A two-week "look ahead," detailed daily bar chart schedule shall be updated and issued weekly.

E. Utilize computer-scheduling software, such as Microsoft Project software or approved equivalent, for all scheduling including schedule updates.

1.5 MONTHLY SCHEDULE UPDATE SUBMITTALS

A. Following acceptance of Contractor's Initial Schedule, monitor progress of Work and adjust Schedule each month to reflect actual progress and any anticipated changes to planned activities.

1. Each Schedule update submitted shall be complete, including all information requested for the Initial Schedule and Original Schedule submittal.

2. Each update shall continue to show all Work activities including those already completed. These completed activities shall accurately reflect "as built" information by indicating when activities were actually started and completed, and Contractor warrants the accuracy of as-built information as shown.

B. A meeting will be held on approximately the 25th of each month to review the Schedule update submittal and progress payment application.

1. At this meeting, at a minimum, the following items will be reviewed: Percent complete of each activity; TIEs for Change Orders and Time Extension Request; actual and anticipated activity sequence changes; actual and anticipated duration changes; and actual and anticipated Contractor delays.

2. These meetings are considered a critical component of overall monthly schedule update submittal; have appropriate personnel attend. At a minimum, Contractor's General Superintendent and Scheduler shall attend these meetings.

3. Plan on the meeting taking no less than four hours.

C. Within five Days after monthly Schedule update meeting, submit the updated Schedule.

D. City will either accept or reject monthly schedule update submittal.

1. If accepted, percent complete shown in monthly update will be basis for Application for Payment by Contractor. The schedule update shall be submitted as part of Contractor's Application for Payment.

2. If rejected, update shall be corrected and resubmitted by Contractor before the Application for Payment is submitted.

///

///

E. Updating, changing or revising of any report, curve, schedule or narrative submitted to City by Contractor under this Contract, nor City's review or acceptance of any such report, curve, schedule or narrative shall not have the effect of amending or modifying, in any way, the Contract Substantial Completion date or milestone dates or of modifying or limiting, in any way, Contractor's obligations under this Contract.

1.6 SCHEDULE REVISIONS

A. Updating the Schedule (Initial and Original) to reflect actual progress shall not be considered revisions to the Schedule. Since scheduling is a dynamic process, however, revisions to activity durations and sequences are expected on a monthly basis.

B. To reflect revisions to the Schedule, provide City with a written narrative with a full description and reasons for each Work activity revised. For revisions affecting the sequence of Work, provide a schedule diagram that compares the original sequence to the revised sequence of Work. Provide the written narrative and schedule diagram for revisions three Days in advance of the monthly schedule update meeting. Clearly show and discuss any changes in the critical path.

C. Schedule revisions shall not be incorporated into any schedule update until City has reviewed the revisions. City may request further information and justification for schedule revisions and, within three Days, provide City with a complete written narrative response to City's request.

D. If City does not accept Contractor's revision, and Contractor disagrees with City's position, Contractor has seven Days from receipt of City's letter rejecting the revision, to provide a written narrative providing full justification and explanation for the revision. Contractor's failure to respond in writing within seven Days of City's written rejection of a schedule revision shall be contractually interpreted as acceptance of City's position, and Contractor waives its rights to subsequently dispute or file a claim regarding City's position. If Contractor files a timely response as provided in this paragraph, and the parties are still unable to agree, Contractor's sole right shall be to file a claim as provided in Document 00700, General Conditions, Article 12.

E. At City's discretion, Contractor can be required to provide Subcontractor certifications of performance regarding proposed schedule revisions affecting said Subcontractors.

1.7 RECOVERY SCHEDULE

A. If a Schedule update shows a substantial completion date 21 Days beyond any Contract Substantial Completion date, or individual Milestone completion dates, submit to City within seven Days the proposed revisions to recover the lost time. As part of this submittal, provide a written narrative for each revision made to recapture the lost time. If the revisions include sequence changes, provide a schedule diagram comparing the original sequence to the revised sequence of Work. If City requests, show the intended critical path; secure appropriate Subcontractor and supplier consent to the recovery Schedule; submit a narrative explaining trade flow and construction flow changes, duration changes, added/deleted activities, critical path changes and identify all near critical paths and man hour loading assumptions for major Subcontractors.

B. The revisions shall not be incorporated into any Schedule update until City has reviewed the revisions.

C. If City does not accept Contractor's revisions, City and Contractor shall follow the procedures in paragraphs 1.6C, 1.6D, and 1.6E of this Section 01320.

D. At City's discretion, Contractor can be required to provide Subcontractor certifications for revisions affecting said Subcontractors.

1.8 TIME IMPACT EVALUATION FOR CHANGE ORDERS AND OTHER DELAYS

A. When Contractor is directed to proceed with changed work, prepare and submit, within 14 Days from the direction to proceed, a TIE that includes both a written narrative and a schedule diagram depicting how the changed work affects other schedule activities. The schedule diagram shall show how Contractor proposes to incorporate the changed work in the schedule, and how it impacts the current Schedule update critical path or otherwise. Contractor is also responsible for requesting time extensions based on the TIE's impact on the critical path. The diagram shall be tied to the main sequence of scheduled activities to enable City to evaluate the impact of changed work to the scheduled critical path.

B. Comply with the requirements of paragraph 1.8A of this Section 01320 for all types of delays such as, but not limited to, Contractor/Subcontractor delays, adverse weather delays, strikes, procurement delays, fabrication delays, etc.

C. Contractor is responsible for all costs associated with the preparation of TIEs, and the process of incorporating TIEs into the current schedule update. Provide City with four copies of each TIE.

D. Once agreement has been reached on a TIE, the Contract Time will be adjusted accordingly. If agreement is not reached on a TIE, the Contract Time may be extended in an amount City allows, and Contractor may submit a claim for additional time claimed by Contractor as provided in Document 00700, General Conditions.

1.9 TIME EXTENSIONS

A. Contractor is responsible for requesting time extensions for time impacts that, in the opinion of Contractor, impact the critical path of the current schedule update. Notice of time impacts shall be given in accordance with Document 00700, General Conditions.

B. Where an event for which City is responsible impacts the projected Substantial Completion date, provide a written mitigation plan, including a schedule diagram, which explains how (e.g., increase crew size, overtime, etc.) the impact can be mitigated. Also include a detailed cost breakdown of the labor, equipment, and material Contractor would expend to mitigate City-caused time impact. Submit mitigation plan to City within 14 Days from the date of discovery of said impact. Contractor is responsible for the cost to prepare the mitigation plan.

C. Failure to request time, provide TIE, or provide the required mitigation plan will result in Contractor waiving its right to a time extension and cost to mitigate the delay.

D. No time will be granted under the Contract Documents for cumulative effect of changes.

E. City will not be obligated to consider any time extension request unless requirements of Contract Documents are complied with.

F. Failure of Contractor to perform in accordance with the current schedule update shall not be excused by submittal of time extension requests.

G. Notwithstanding any other provision of this Section 01320, if Contractor does not submit a TIE within the required 14 Days for any issue, Contractor hereby agrees that Contractor does not require a time extension for that issue.

1.10 PROJECT STATUS REPORTING

A. In addition to submittal requirements for scheduling identified in this Section 01320, provide a monthly project status report (i.e., written narrative report) to be submitted in conjunction with each Schedule as specified herein. Status reporting shall be in form specified in this paragraph 1.10 below.

B. Prepare monthly written narrative reports of status of Project for submission to City. Written status reports shall include:

1. Status of major Project components (percent complete, amount of time ahead or behind schedule) and an explanation of how Project will be brought back on schedule if delays have occurred.

2. Progress made on critical activities indicated on each Schedule, including inspections.

3. Explanations for any lack of work on critical path activities planned to be performed during last month.

4. Explanations for any schedule changes, including changes to logic or to activity durations.

5. List of critical activities scheduled to be performed during the next month.

6. Status of major material and equipment procurement.

7. Any delays encountered during reporting period.

8. Provide printed report indicating actual versus planned resource (labor, materials and equipment) loading for each trade and each activity. This report shall be provided on weekly and monthly basis.
   a. Actual resource shall be accumulated in field by Contractor, and shall be as noted on Contractor's daily reports. These reports will be basis for information provided in monthly and weekly printed reports.
   b. Explain all variances and mitigation measures.

9. Contractor may include any other information pertinent to status of Project. Include additional status information requested by City at no additional cost.

10. Status reports, and the information contained therein, shall not be construed as claims, notice of claims, notice of delay, or requests for changes or compensation.

C. At the close of each workday, Contractor shall provide City with report of Contractor and its Subcontractors' work activities for that day, including trades, equipment, work activities worked on, staff levels, and equipment deliveries.

END OF SECTION

SECTION 01330

SUBMITTAL PROCEDURES

PART 1 GENERAL

1.1 SUMMARY

A. Submittals are intended to assist the Contractor in the performance of the Work. A review of a submittal shall not transfer any responsibility for complying with the requirements of the Contract Documents from the Contractor to the City.

B. Section includes description of general requirements for Submittals for the Work:

1.2 Procedures
1.3 Schedule of Shop Drawing and Sample Submittals
1.4 Safety Program
1.5 Progress Schedule
1.6 Product Data
1.7 Shop Drawings
1.8 Samples
1.9 Coordination Drawings
1.10 Quality Assurance/Control Submittals
  a. Test Reports
  b. Certificates
  c. Manufacturers' Instructions
  d. Material Safety Data Sheets
1.11 Installation, Operations, and Maintenance Manuals
1.12 Computer Programs
1.13 Project Record Documents
1.14 Delay of Submittals
1.15 Optional Review Meeting

1.2 PROCEDURES

A. Submit at Contractor's expense, in duplicate sets, the following items ("Submittals") required by the Contract Documents:

1. Schedule of Shop Drawing and Sample Submittals

2. Safety Plans

3. Progress Schedule

4. Product Data; Shop Drawings

5. Samples

6. Coordination Drawings

7. Quality Assurance Control Data

8. Machine Inventory Sheets

9. Installation, Operation, and Maintenance Manuals

10. Computer Programs

11. Project Record Documents

B. Submit these Submittals to City for review and approval in accordance with accepted Schedule of Shop Drawings and Samples Submittals. If no such schedule is agreed upon, then all Shop Drawing, Samples, and product data Submittals shall be submitted within 21 Days after receipt of Notice of Award from City.

C. Transmit each item with the appropriate Submittal transmittal form (attached to this Section 01330 as Exhibits A and B) or a form approved by the City. Identify Project, Contractor, Subcontractor, major supplier, pertinent Drawing sheet and detail number, and Specification Section number as appropriate. Where manufacturer's standard drawings or data sheets are used, they shall be marked clearly to show those portions of the data that are applicable to this Project. Inapplicable portions shall be marked out. Submittals shall be submitted based on each Specification Section. Submittals containing information about more than one Specification Section will be returned for resubmittal. Submittals shall include all information requested by each Specification Section. (No partial Submittals.) Incomplete Submittals will not be reviewed by the City and will be returned to the Contractor.

D. The data shown on the Submittals shall be complete with respect to quantities, dimensions, specified performance and design criteria, materials and similar data to show City the materials and equipment Contractor proposes to provide and to enable City to review the information for the limited purposes specified in this Section 01330. Submittals shall be identified clearly as to material, supplier, pertinent data such as catalog numbers and the use for which it is intended and otherwise as City may require to enable City to review the Submittal. The quantity of each Submittal to be submitted will be as required by individual Specification Sections or this Section 01330.

E. At the time of each submission, give City specific written notice of all variations, if any, that the submitted Submittal may have from the requirements of the Contract Documents, and the reasons therefore. This written notice shall be in a written communication attached to the Submittal transmittal form. In addition, cause a specific notation to be made on each Submittal submitted to City for review and approval of each such variation. If City accepts deviation, City will note its acceptance on the returned Submittal transmittal form and, if necessary, issue appropriate Contract Modification.

F. Submittal coordination and verification is responsibility of Contractor; this responsibility shall not be delegated in whole or in part to Subcontractors or suppliers. Before submitting each Submittal, review and coordinate each Submittal with other Submittals and with the requirements of the Work and the Contract Documents, and determine and verify:

1. All field measurements, quantities, dimensions, specified performance criteria, installation requirements, materials, catalog numbers and similar information with respect thereto;

2. All materials with respect to intended use, fabrication, shipping, handling, storage, assembly and installation pertaining to the performance of the Work; and

3. All information relative to Contractor's sole responsibilities and of means, methods, techniques, sequences and procedures of construction and safety precautions and programs incident thereto.

G. Contractor's submission to City of a Submittal shall constitute Contractor's representation that it has satisfied its obligations under the Contract Documents, and as set forth immediately above in this paragraph 1.2 of Section 01330, with respect to Contractor's review and approval of that Submittal.

H. Designation of work "by others," if shown in Submittals, shall mean that work will be responsibility of Contractor rather than Subcontractor or supplier who has prepared Submittals.

I. After review by City of each of Contractor's Submittals, one set of material will be returned to Contractor with actions defined in the following categories:

1. NO EXCEPTIONS TAKEN - Accepted subject to its compatibility with future Submittals and additional partial Submittals for portions of the Work not covered in this Submittal. Does not constitute approval or deletion of specified or required items not shown on the Submittal.

2. MAKE CORRECTIONS NOTED (NO RESUBMISSIONS REQUIRED) - Same as item 1 above, except that minor corrections as noted shall be made by Contractor.

3. REVISE AS NOTED AND RESUBMIT - Rejected because of major inconsistencies or errors that shall be resolved or corrected by Contractor prior to subsequent review by City.

4. REJECTED - RESUBMIT - Submitted material does not conform to Drawings and/or Specifications in major respect (i.e., wrong size, model, capacity, or material).

J. Make a complete and acceptable Submittal at least by second submission. City reserves the right to deduct monies from payments due Contractor to cover additional costs of review beyond the second submission as required by paragraph 1.2.T.1 of this Section 01330. Illegible Submittals will be rejected and returned to Contractor for resubmission. Contractor shall be in breach of the Contract if Contractor's first resubmittal, following a Submittal which City determines falls within categories 3 or 4 of paragraph 1.2.I. above, does not fall within categories 1 or 2 of paragraph 1.2.I. above.

K. Favorable review will not constitute acceptance by City of any responsibility for the accuracy, coordination and completeness of the Submittals. Accuracy, coordination, and completeness of Submittals shall be sole responsibility of Contractor, including responsibility to back-check comments, corrections, and modifications from City's review before fabrication. Contractor, Subcontractors, or suppliers may prepare Submittals, but Contractor shall ascertain that Submittals meet requirements of Contract Documents, while conforming to structural space and access conditions at point of installation. City's review will be only to assess if the items covered by the Submittals will, after installation or incorporation in the Work, conform to the information given in the Contract Documents and be compatible with the design concept of the completed Project as indicated by the Contract Documents. Favorable review of Submittal, method of work, or information regarding materials and equipment Contractor proposes to furnish shall not relieve Contractor of responsibility for errors therein and shall not be regarded as assumption of risks or liability by City, or any officer or employee thereof, and

Contractor shall have no claim under Contract Documents on account of failure or partial failure or inefficiency or insufficiency of any plan or method of work or material and equipment so accepted. Favorable review shall be considered to mean merely that City has no objection to Contractor using, upon Contractor's own full responsibility, plan or method of work proposed, or furnishing materials and equipment proposed.

L. City's review will not extend the means, methods, techniques, sequences or procedures of construction or to safety precautions or programs incident thereto. The review and approval of a separate item as such will not indicate approval of the assembly in which the item functions.

M. Submit complete initial Submittal for those items where required by individual Specification Sections. Complete Submittal shall contain sufficient data to demonstrate that items comply with Specifications, shall meet minimum requirements for submissions cited in Specification Sections, shall include motor data and seismic anchorage certifications, where required, and shall include necessary revisions required for equipment other than first named. If Contractor submits incomplete initial Submittal when complete Submittal is required, Submittal may be returned to Contractor without review.

N. Copy, conform, and distribute reviewed Submittals in sufficient numbers for Contractor's files, Subcontractors, and vendors.

O. After City's review of Submittal, revise as noted and resubmit as required. Identify changes made since previous Submittal.

1. Begin no fabrication or work that requires Submittals until return of Submittals not requiring resubmittal. Do not extrapolate from Submittals covering similar work.

2. Normally, Submittals will be processed and returned to Contractor within 21 Days of receipt.

P. Distribute copies of reviewed Submittals to concerned persons. Instruct recipients to promptly report any inability to comply with provisions.

Q. All Submittals shall be number-identified by Contractor, prior to submission to City, in accordance with the following:

1. Number each Submittal according to the Specification Section covering the item(s) being submitted. If possible, all items associated with any Specification Section shall be submitted together. If not, each individual Submittal shall be identified by the Specification Section number followed by "-1, "-2", "-3", etc.

2. Affix the Submittal number under which each Submittal is made on every copy of each Shop Drawing, product data, sample, certification, etc.

3. Number Installation, Operation, and Maintenance Manuals with original root number of the approved Submittal for the item.

4. If the Submittal is a resubmittal (including without limitation after an initial Submittal is rejected, returned without review or marked 'Revise as Noted and Resubmit'), add the suffix designation "A" (i.e., a resubmittal of Submittal 1 would be numbered 1A). Subsequent resubmittals would be identified by the Submittal number and sequential letters (i.e., "B", "C", "D", etc.).

5. All Submittals shall include all information requested by each Specification Section. No partial Submittals will be accepted unless previously authorized by City. In the event a partial Submittal is authorized, each subsequent different Submittal (as opposed to resubmittal) is given a new number.

R. Submission Requirements:

1. Deliver Submittals to the City for review at least 30 Days before reviewed Submittals will be needed.

2. Initial Submittal of Installation, Operation, and Maintenance Manuals shall be submitted 45 Days after the date the Submittals that pertain to the applicable portion of the Installation, Operation, and Maintenance Manual are satisfactorily reviewed.

3. The following table lists the number of initial Submittals required from Contractor for each type of submission, to whom Contractor shall distribute the information, and City's distribution of reviewed submissions. If Contractor needs more copies of reviewed Submittals returned to it, then either submit additional copies or make copies from the returned transparency Submittal. Submittals requiring resubmission will require the same quantity and distribution as an initial Submittal.

	Contractor Initial Submittal		**City Submittal Review Return**	
SUBMITTAL	# of Original Transparencies	# of Copies/ Prints/ Samples	# of Original Transparencies	# of Copies/ Prints/ Samples
	City	City	Contractor	Contractor
Shop Drawings	2	7	1	1
Product Data	0	7	0	1
Samples	0	4	0	1
Materials Safety Data Sheets	0	5	0	1
Installation, Operation, and Maintenance Manuals	1	5	0	1
Other Documents	2	9	1	1

4. Accompany Submittals with Submittal transmittal form, in duplicate, containing:
   a. Date, revision date, and Submittal log number.
   b. Project name and City's Contract number.
   c. Contractor's name, address, and job number.
   d. Specification Section number clearly identified.
   e. The quantity of Shop Drawings, Product Data, or Samples submitted.
   f. Notification of deviations from Contract Documents.
   g. Materials Safety Data Sheet (MSDS) for each item complying with OSHA's Hazard Communication Standard 29 CFR 1910.1200.
   h. Other pertinent data.

5. Submittal shall include:
   a. Date and revision dates.
   b. Revisions, if any, identified.
   c. Project Name and Contract number.

d. The names of:
   1) Contractor, Subcontractor, Supplier, Manufacturer, and separate detailer, when pertinent.
e. Identification of product material by location within the Project.
f. Relation to adjacent structure or materials.
g. Field dimensions, clearly identified as such.
h. Specification Section number and applicable detail reference number on the Drawings.
i. Applicable reference standards, such as ASTM, ANSI, FS, NEMA, SMACNA or ACI.
j. A blank space, on each Drawing or data sheet, 5" x 4" for the City's stamp.
k. Identification of deviations from Contract Documents.
l. Contractor's stamp, initialed or signed, with language certifying the review of Submittals, verification of field measurements, construction criteria and technical standards in compliance with Contract Documents.

S. Resubmission requirements:

1. Shop Drawings:
   a. Revise initial Shop Drawings as required and resubmit as specified for initial Submittals.
   b. Indicate on Shop Drawings any changes that have been made other than those requested by City.

2. Product Data and Samples:
   a. Submit new Product Data and Samples as required for initial Submittals.

3. Installation, Operation, and Maintenance Manuals:
   a. Revise initial Installation, Operation, and Maintenance Manual(s) as required and resubmit as specified for initial Submittals.

T. Number of resubmissions:

1. One re-examination of Contractor's Submittals that have been returned for correction or replacement will be included in City's budget. Any additional re-examination of Contractor's Submittals will be considered additional scope services to be paid by Contractor to the City. Contractor shall pay City (or City may deduct from any progress or final payment), for engineering personnel, on an hourly basis at 2.5 times direct payroll expenses, and for consultant personnel time at 1.25 times the amount billed City.

1.3 SCHEDULE OF SHOP DRAWING AND SAMPLE SUBMITTALS

A. Submit preliminary Schedule of Shop Drawing and Sample Submittals as required by Document 00700, General Conditions. Submit two copies of final and accepted Schedule of Shop Drawings and Sample Submittals as required by paragraph 1.2A.1 of this Section 01330.

B. Schedule of Shop Drawing and Sample Submittals will be used by City to schedule its activities relating to review of Submittals. Schedule of Submittals shall indicate the timing of Submittals and the early Submittals of long-lead-time items and of items that require extensive review.

C. Schedule of Shop Drawing and Sample Submittals will be reviewed by City and shall be revised and resubmitted until accepted by City.

D. Unless otherwise specified, submit Submittals in groups containing all associated items to ensure that related information is available for checking each item when Submittals are received. Identify on the Submittal which Submittals should be reviewed together.

1.4 SAFETY PROGRAM

A. Submit three copies of Safety Program specific to these Contract Documents to City within the time set forth in Section 01540, Site Security and Safety, paragraph 1.5.

1.5 PROGRESS SCHEDULE

A. See Section 01320, Progress Schedules and Reports, for schedule and report requirements. Section 01320 shall control in any conflict with Section 01330.

B. Submit one electronic copy and three print copies of schedule at each of the following times:

1. Initial Progress Schedule submitted in accordance with paragraph 11.1.B of Document 00700, General Conditions.

2. Original Schedule within 20 Days of the Notice to Proceed date.

3. Adjustments to the Schedule as required.

4. Monthly Schedule Updates, seven Days prior to monthly progress meeting.

C. Submit four full color paper copies of sufficient size for easy reading of the reports listed in Section 01320, Progress Schedules and Reports, with:

1. Initial Schedule

2. Original Schedule

3. Each Monthly Schedule Update

D. An electronic copy of the schedules and reports listed in this paragraph 1.5 shall be submitted on CD-ROM or other City-approved electronic media, using City-approved software, including software described in paragraph 1.4E. of Section 01320 in addition to the hard copies specified in this paragraph 1.5. Electronic files shall be complete copies, including all programs and electronic coding.

1.6 PRODUCT DATA

A. Within five (5) Days after the start date of the Contract Time, submit two copies of complete list of major products proposed for use, with name of manufacturer, telephone number, trade name, and model number of each product. Tabulate product data by Specification Section.

B. For products specified only by reference standards, give manufacturer, trade name, model or catalog designation, and reference standards.

C. Product or Catalog Data:

1. Manufacturer's standard drawings shall be modified to delete non-applicable data or include applicable data.

2. Manufacturer's catalog sheets, brochures, diagrams, schedules, charts, illustrations and other standard descriptive data:
   a. Mark each copy to identify pertinent materials, products, or models.
   b. Show dimensions and clearances required, performance characteristics and capacities, wiring diagrams and controls.
   c. Include applicable MSDS.

D. Supplemental Data:

1. Submit number of copies that Contractor requires, plus two copies that will be retained by City.

2. Mark each copy to identify applicable products, models, options, and other data. Supplement manufacturer's standard data to provide information unique to Project.

E. Provide copies for Project Record Documents described in Section 01770, Contract Closeout.

1.7 SHOP DRAWINGS

A. Minimum Sheet Size: 8½ inches by 11 inches. Other Sheet Sizes: Multiples of 8½ inches by 11 inches. Maximum Sheet Size: 30 inches by 42 inches.

B. Original sheet will be marked with City's review comments and returned to Contractor.

C. Mark each copy to identify applicable products, models, options, and other data; supplement manufacturers' standard data to provide information unique to Work.

D. Include manufacturers' installation instructions when required by Specification Section.

E. If Contractor submits Shop Drawings for items that Shop Drawings are not specified, City will not be obliged to review them.

F. Contractor is responsible for procuring copies of Shop Drawings for its own use as it may require for the progress of the Work.

G. Shop Drawings shall be drawn to scale and completely dimensioned, giving plan view together with such sectional views as are necessary to clearly show construction detail and methods.

1.8 SAMPLES

A. Submit full range of manufacturers' standard colors, textures, and patterns for City's selection.

B. Submit samples to illustrate functional and aesthetic characteristics of product, with integral parts and attachment devices. Coordinate Submittal of different categories for interfacing work.

C. Include identification on each sample, giving full information.

D. Sizes: Unless otherwise specified, provide the following:

1. Paint Chips: Manufacturers' standard

2. Flat or Sheet Products: Minimum 6 inches square, maximum 12 inches square

3. Linear Products: Minimum 6 inches, maximum 12 inches long

4. Bulk Products: Minimum 1 pint, maximum 1 gallon

E. Full size samples may be used in Work upon approval by City.

F. Field Samples and Mock-ups (if applicable):

1. Erect field samples and mock-ups at Site in accordance with requirements of Specification Sections. If testing is conducted, record and certify results and full Contract compliance.

2. Modify or make additional field samples and mock-ups as required to provide appearance and finishes approved by City.

3. Approved field samples and mock-ups may be used in Work upon approval by City.

4. Construct or prepare as many additional Samples as may be required, as directed by the City, until desired textures, finishes, and/or colors are obtained.

5. Accepted Samples and mock-up shall serve as the standard of quality for the various units of work.

G. No review of a Sample shall be taken in itself to change or modify the requirements in the Contract Documents.

H. Finishes, materials, and workmanship in the completed Work shall match accepted Samples.

1.9 COORDINATION DRAWINGS (NOT USED)

1.10 QUALITY ASSURANCE/CONTROL SUBMITTALS

A. Test Reports:

1. Submit three copies; One copy will be marked with City's review comments and returned to Contractor.

2. Indicate that material or product conforms to or exceeds specified requirements.

3. Reports may be from recent or previous tests on material or product, but shall be acceptable to City. Comply with requirements of each individual Specification Section.

B. Certificates:

1. Submit five copies; One copy will be marked with City's review comments and returned to Contractor.

2. Indicate that material or product conforms to or exceeds specified requirements.

3. Submit supporting reference data, affidavits, and certifications as appropriate.

4. Certificates may be recent or from previous test results on material or product, but shall be acceptable to City.

C. Manufacturers' Instructions:

1. Submit three copies; One copy will be marked with City's review comments and returned to Contractor.

2. Include manufacturers' printed instructions for delivery, storage, assembly, installation, startup, adjusting, and finishing.

3. Identify conflicts between manufacturers' instructions and Contract Documents.

D. Material Safety Data Sheets:

1. In addition to Material Safety Data Sheets (MSDS) otherwise required by the Contract Documents, submit five copies for any paints, solvents, thinners, varnish, lacquer, glues and adhesives, mastics, or other materials needed for the Project as required by the individual Specification Sections or as otherwise specified in the Contract Documents.

2. MSDS required for a Submittal shall be submitted with product data in order for the Submittal to be reviewed.

1.11 INSTALLATION, OPERATIONS, AND MAINTENANCE MANUALS

See Special Provisions

1.12 COMPUTER PROGRAMS

See Special Provisions

1.13 PROJECT RECORD DOCUMENTS

Submit one copy of each of the Project Record Documents listed in Section 01770, Contract Closeout.

1.14 DELAY OF SUBMITTALS

Delay of Submittals by Contractor is considered avoidable delay. Liquidated damages incurred because of late Submittals will be assessed to Contractor.

1.15 OPTIONAL REVIEW MEETING

A. At the Contractor's request, in order to facilitate the timeliness of the review process, the City may schedule a meeting to review the materials submitted. If this option is exercised, the following requirements apply:

1. Request a meeting date with the City at least 10 Business Days in advance.

2. Provide the complete package of Submittal information at least 5 Business Days in advance of the meeting.

3. The meeting shall take place at City's office. City will provide the authorized staff to review and respond on the Submittal information during the meeting.

4. Make available for this meeting the job superintendent and/or foreman, Contractor's safety officer, and someone knowledgeable of all the items submitted and authorized to make substitutions or changes**.**

END OF SECTION

[TRANSMITTAL SHEET FOLLOWS THIS PAGE]

EXHIBIT A

SUBMITTAL NO. _____

<table>
<tr><td colspan="3">Project Name:
[NORTHSIDE TANKS SITE IMPROVEMENTS PROJECT WA 30148</td><td colspan="2">Date Received:</td></tr>
<tr><td colspan="3">City of Santa Clara, a Municipal Corporation
of the State of California
1500 Warburton Avenue
Santa Clara, CA 95050</td><td colspan="2">Checked By:</td></tr>
<tr><td colspan="2">Contractor:</td><td>Log Page:</td><td colspan="2"></td></tr>
<tr><td colspan="2">Address:

Attention:</td><td>Address:

Attention:</td><td colspan="2">Specification Section Number:
1st Submittal ☐ | Resubmittal ☐</td></tr>
<tr><td colspan="2">Date Transmitted:</td><td>Previous Transmittal Date:</td><td colspan="2"></td></tr>
<tr><td>No. Copies</td><td>Description</td><td>Manufacturer</td><td>Dwg. or Data No.</td><td>Action Taken*</td></tr>
<tr><td></td><td></td><td></td><td></td><td></td></tr>
<tr><td></td><td></td><td></td><td></td><td></td></tr>
<tr><td></td><td></td><td></td><td></td><td></td></tr>
</table>

Remarks

* The action designated above is in accordance with the following legend:

A. No Exceptions Taken
B. Make Corrections Noted (No Resubmission Required)
C. Make Corrections Noted and Resubmit
D. Not Approved – This submittal is deficient in the following area(s):
   1. Not enough information for review
   2. No reproducibles submitted
   3. Copies illegible
   4. Not enough copies submitted
   5. Wrong sequence number
   6. Wrong resubmittal number
   7. Wrong Specification section number
   8. Wrong form used
   9. See comments
E. City's review not required
   1. Submittal not required
   2. Supplemental information. Submittal retained for informational purposes only
   3. Information reviewed and approved prior to Submittal
   4. See comments

Comments

By Date

Distribution: Contractor ☐ File ☐ Field ☐ City ☐ Other ☐

EXHIBIT B

MANUAL SUBMITTAL NO. _____

Project Name: NORTHSIDE TANKS SITE IMPROVEMENTS PROJECT WA 30148			Date Received:	
City of Santa Clara, a Municipal Corporation of the State of California 1500 Warburton Avenue Santa Clara, CA 95050			Checked By:	
Contractor:			Log Page:	
Address: Attention:	Address: Attention:		Specification Section Number:	
			1st Submittal ☐	Resubmittal ☐
Date Transmitted:	Previous Transmittal Date:			
No. Copies	Description	Manufacturer	Dwg. or Data No.	Action Taken*

Remarks

* The action designated above is in accordance with the following legend:

A. No Exceptions Taken
B. Make Corrections Noted (No Resubmission Required)
C. Make Corrections Noted and Resubmit
D. Not Approved – This manual Submittal is deficient in the following area(s):
   1. Equipment record sheets
   2. Functional description
   3. Assembly, disassembly, installation, alignment, adjustment, and checkout instructions
   4. Operating instructions
   5. Lubrication and maintenance instructions
   6. Troubleshooting guide
   7. Parts list and ordering instructions
   8. Organization (indexing and tabbing)
   9. Wiring diagrams and schematics specific to installation
   10. Outline, cross section, and assembly diagrams
   11. Test data and performance curves
   12. Tag or equipment identification numbers
   13. See comments

Comments

By _____ Date

Distribution: Contractor ☐ File ☐ Field ☐ City ☐ Other ☐

END OF SECTION

THIS PAGE

WAS INTENTIONALLY

LEFT BLANK

SECTION 01410

REGULATORY REQUIREMENTS

PART 1 GENERAL

1.1 SUMMARY

A. Section includes: regulatory requirements applicable to Contract Documents.

B. Specific reference in the Specifications to codes and regulations or requirements of regulatory agencies shall mean the latest printed edition of each adopted by the regulatory agency in effect at the time of the opening of Bids, except as may be otherwise specifically stated in the Contract Documents.

C. Should any conditions develop not covered by the Contract Documents wherein the finished Work will not comply with current codes, a change order detailing and specifying the required Work shall be submitted to and approved by City before proceeding with the Work.

1.2 REFERENCES TO REGULATORY REQUIREMENTS

A. Codes, laws, ordinances, rules and regulations referred to shall have full force and effect as though printed in full in these Specifications. Code, laws, ordinances, rules and regulations are not furnished to Contractor, because Contractor is assumed to be familiar with these requirements. The listing of applicable codes, laws, and regulations for hazardous waste abatement Work in the Contract Documents is supplied to Contractor as a courtesy and shall not limit Contractor's responsibility for complying with all applicable laws, regulations or ordinances having application to the Work. Where conflict among the requirements or with these Specifications occurs, the most stringent requirements shall be used.

B. Conform to referenced codes, laws, ordinances, rules and regulations.

C. Precedence:

1. Where specified requirements differ from the requirements of applicable codes, ordinances and standards, the more stringent requirements shall take precedence.

2. Where Drawings or Specifications require or describe products or execution of better quality, higher standard or greater size than required by applicable codes, ordinances and standards, Drawings and Specifications shall take precedence so long as such increase is legal.

3. Where no requirements are identified on Drawings or in Specifications, comply with all requirements of applicable codes, ordinances and standards of governing authorities having jurisdiction.

///

///

1.3 CODES

A. Codes that apply to Contract Documents include, but are not limited to, the following:

1. CBC (Part 2, Title 24, CCR, including, but not limited to, Sections 16A, 102A.23, 308, 420A, 504-506, 904.2.6, 1019 and 1604)

2. CEC (Part 3, Title 24, CCR)

3. CMC (Part 4, Title 24, CCR)

4. CPC (Part 5, Title 24, CCR),

5. State Elevator Safety Regulations (Part 7, Title 24, CCR)

1.4 LAWS, ORDINANCES, RULES, AND REGULATIONS

A. During prosecution of Work to be done under Contract Documents, comply with applicable laws, ordinances, rules and regulations, including, but not limited to, the following:

1. Federal
   a. Americans With Disabilities Act of 1990
   b. 29 CFR, Section 1910.1001, Asbestos
   c. 40 CFR, Subpart M, National Emission Standards for Asbestos
   d. Executive Order 11246
   e. Federal Endangered Species Act
   f. Clean Water Act

2. State of California
   a. California Code of Regulations, Titles 5, 8, 19, 21, 22, 24 and 25
   b. California Public Contract Code
   c. California Health and Safety Code
   d. California Government Code
   e. California Labor Code
   f. California Civil Code
   g. California Code of Civil Procedure
   h. CPUC General Order 95, Rules for Overhead Electric Line Construction
   i. CPUC General Order 128, Rules for Construction of Underground Electric Supply and Communications Systems
   j. Cal/OSHA
   k. OSHA: Hazard Communications Standards
   l. California Endangered Species Act
   m. California Water Code
   n. California Fish and Game Code

///

///

///

///

3. State of California Agencies
   a. State and Consumer Services Agency
   b. Office of the State Fire Marshall
   c. Office of Statewide Health Planning and Development
   d. Department of Fish and Game
   e. Bay Area Air Quality Management District
   f. San Francisco Bay Regional Water Quality Control Board

4. Local Agencies:
   a. City of Santa Clara
   b. County of Santa Clara
   c. Santa Clara County Fire Department

5. Other Requirements:
   a. National Fire Protection Association (NFPA): Pamphlet 101, Life Safety.
   b. References on Drawings or in Specifications to “code” or “building code” not otherwise identified shall mean the codes specified in this Section 01410, together with all additions, amendments, changes, and interpretations adopted by code authorities of the jurisdiction.

B. Have access to all of the above documents within 24 hours.

C. Other Applicable Laws, Ordinances and Regulations:

1. Work shall be accomplished in conformance with all applicable laws, ordinances, rules and regulations of federal, state, and local governmental agencies and jurisdictions having authority over the Project.

2. Work shall be accomplished in conformance with all rules and regulations of public utilities and utility districts.

3. Where such laws, ordinances rules, and regulations require more care or greater time to accomplish Work, or require better quality, higher standards or greater size of products, Work shall be accomplished in conformance to such requirements with no change to the Contract Time and Contract Sum, except where changes in laws, ordinances, rules and regulations occur subsequent to the time of opening of the bids.

D. Under California Government Code Section 930.2 et. seq. and Public Contract Code Section 7105(d)(2), neither the Contract Claims Procedure (Document 00700, Article 12) nor the Change Order Procedure (Section 01250) may be modified, waived, or otherwise not complied with, absent a written change order that explicitly and expressly makes such modifications.

1.5 CONFLICTS

A. Between referenced regulatory requirements: Comply with the one establishing the more stringent requirement.

B. Between referenced regulatory requirements and Contract Documents: Comply with the one establishing the more stringent requirement.

1.6 REQUIRED PROVISIONS ON CONTRACT CLAIM RESOLUTION

A. The California Public Contract Code specifies required provisions on resolving contract claims less than $375,000, which are set forth below, and constitute a part of this Contract.

1. For the purposes of this section, "Claim" means a separate demand by Contractor of $375,000 or less for (1) a time extension, (2) payment or money or damages arising from Work done by or on behalf of Contractor arising under the Contract Documents and payment of which is not otherwise expressly provided for or the Claimant is not otherwise entitled to, or (3) an amount the payment of which is disputed by City. In order to qualify as a Claim, the written demand must state that it is a Claim submitted under paragraph 12 of Document 00700, General Conditions, and be submitted in compliance with all requirements of Document 00700, General Conditions, paragraph 12. Separate Claims which total more than $375,000 do not qualify as a "separate demand of $375,000 or less," as referenced above, and are not subject to this section.

2. A voucher, invoice, payment application, or other routine or authorized form of request for payment is not a Claim for purposes of this section. If such request is disputed as to liability or amount, then the disputed portion of the submission may be converted to a Claim under this section by submitting a separate claim in claim in compliance with Contract Documents claim submission requirements.

3. Caution. This section does not apply to tort claims and nothing in this section is intended nor shall be construed to change the time periods for filing tort claims or actions specified by Chapter 1 and Chapter 2 of Part 3 of Division 3.6 of Title 1 of the California Government Code.

B. Procedure:

1. The Claim must be in writing, submitted in compliance with all requirements of Document 00700, General Conditions, paragraph 12, including, but not limited to, the time prescribed by and including the documents necessary to substantiate the Claim, pursuant to Document 00700, General Conditions, paragraph 12.3. Claims must be filed on or before the day of final payment. Nothing in this section is intended to extend the time limit or supersede notice requirements for the filing of claims as set forth in Document 00700, General Conditions, paragraph 12 or elsewhere in the Contract Documents.

2. For Claims of fifty thousand dollars ($50,000) or less:
   a. City shall respond in writing within 45 days of receipt of the Claim, or
   b. City may request in writing within 30 days of receipt of the Claim, any additional documentation supporting the Claim or relating to any defenses or claims City may have against Claimant.
      1) If additional information is thereafter required, it shall be requested and provided in accordance with this section upon mutual agreement of City and Claimant.
      2) City's written response to the Claim, as further documented, shall be submitted to Claimant within 15 days after receipt of further documentation or within a period of time no greater than taken by Claimant in producing the additional information, whichever is greater.

3. For Claims over Fifty Thousand Dollars ($50,000) and less than or equal to $375,000:
   a. City shall respond in writing within 60 days of receipt of the Claim, or
   b. City may request in writing within 30 days of receipt of the Claim, any additional documentation supporting the Claim or relating to any defenses or claims City may have against Claimant.
      1) If additional information is thereafter required, it shall be requested and provided in accordance with this section, upon mutual agreement of City and Claimant;
      2) City's written response to the Claim, as further documented, shall be submitted to Claimant within 30 days after receipt of further documentation or within a period of time no greater than taken by Claimant in producing the additional information, whichever is greater.

4. Meet and Confer:
   a. If Claimant disputes City's written response, or City fails to respond within the time prescribed above, Claimant shall notify City, in writing, either within 15 days of receipt of City's response or within 15 days of City's failure to timely respond, and demand an informal conference to meet and confer for settlement of the issues in dispute. Upon demand City will schedule a meet and confer conference within 30 days for settlement of the dispute.
   b. Following the meet and confer conference, if the Claim or any portion remains in dispute, Claimant may file a claim as provided in Chapter 1 (commencing with Section 900) and Chapter 2 (commencing with Section 910) of Part 3 of Division 3.6 of Title 1 of the California Government Code. For purposes of those provisions, the running of the period of time within which a claim must be filed shall be tolled from the time Claimant submits its written claim as set forth in paragraph 12.2.B of Document 00700 (General Conditions), until the time that Claim is denied as a result of the meet and confer process, including any period of time utilized by the meet and confer process.

1.7 COMPLIANCE WITH AMERICANS WITH DISABILITIES ACT

Contractor acknowledges that, pursuant to the Americans with Disabilities Act (ADA), programs, services and other activities provided by a public entity to the public, whether directly or through a contractor, must be accessible to the disabled public. Contractor shall provide the services specified in the Contract Documents in a manner that complies with the ADA and any and all other applicable federal, state and local disability rights legislation. Contractor agrees not to discriminate against disabled persons in the provision of services, benefits or activities provided under this Agreement and further agrees that any violation of this prohibition on the part of Contractor, its employees, agents or assigns shall constitute a material breach of the Contract Documents.

END OF SECTION

THIS PAGE

WAS INTENTIONALLY

LEFT BLANK

SECTION 01411

REGULATORY REQUIREMENTS - HAZARDOUS MATERIALS

PART 1 GENERAL

1.1 SUMMARY

A. Section Includes:

1. Regulatory requirements applicable to Work in connection with hazardous waste abatement and disposal including, but not limited to, organochlorine pesticide, arsenic, lead, and mercury contaminated soils and materials, construction and demolition debris and any other hazardous substance or hazardous waste.

B. This Section supplements Section 01410, Regulatory Requirements, and the Work-specific listings of applicable regulatory requirements elsewhere in the Specifications.

1.2 REFERENCES TO REGULATORY REQUIREMENTS

A. Codes, laws, ordinances, rules, and regulations applicable to the Work shall have full force and effect as though printed in full in Contract Documents. Codes, laws, ordinances, rules, and regulations are not furnished to Contractor, because Contractor is assumed to be familiar with their requirements. The listing herein of applicable codes, laws, and regulations for hazardous waste abatement work is supplied to Contractor as a courtesy and shall not limit Contractor's responsibility for complying with all applicable laws, regulations, or ordinances having application to the Work. Where conflict among the requirements or with these Specifications exists, the most stringent requirements shall be used.

B. Conform to all applicable codes, laws, ordinances, rules, and regulations that are in effect on date of contracting.

1.3 LAWS, ORDINANCES, RULES, AND REGULATIONS

A. During prosecution of Work under Contract Documents, Contractor shall comply with applicable laws, ordinances, rules and regulations including, but not limited to, those listed below.

B. Federal:

1. Statutory Requirements:
    a. Resource Conservation and Recovery Act, 42 U.S.C. Sections 6901 *et seq*.
    b. Comprehensive Environmental Response, Compensation and Liability Act of 1980, as amended by the Superfund Amendments and Reauthorization Act of 1986, 42 U.S.C. Sections 9601 *et seq*.
    c. Toxic Substances Control Act of 1976, 15 U.S.C., Sections 2601 *et seq*.
    d. Hazardous Materials Transportation Act of 1975, 49 U.S.C. Sections 1801 *et seq.*
    e. Clean Water Act, 33 U.S.C. Sections 1251 *et seq.*
    f. Safe Drinking Water Act, 42 U.S.C., Sections 3001 *et seq.*

g. Clean Air Act, Section 112, 42 U.S.C., Section 7412

h. Occupational Safety and Health Act of 1970, 29 U.S.C., Sections 651 *et seq.*

i. Underground Storage Tank Law, 42 U.S.C., Sections 6991 *et seq.*

j. The Emergency Planning and Community Right to Know Act of 1986, 42 U.S.C., Sections 11011 *et seq.*

2. Environmental Protection Agency (EPA):
   a. 40 C.F.R. Parts 260, 264, 265, 268, 270
   b. 40 C.F.R. Parts 258 *et seq.*
   c. 40 C.F.R. Part 761
   d. 40 C.F.R. Parts 122-124
   e. 40 C.F.R. 61.150(d), 61.152

3. Occupational Safety and Health Administration (OSHA):
   a. OSHA Worker Protection Standards, 29 C.F.R. Part 1926.58, Construction Standards and 29 C.F.R. 1910.1001 General Industry Standard
   b. OSHA, 29 C.F.R. Part 1926.1101, Construction Standards for Asbestos
   c. OSHA, Lead Exposure in Construction: Interim Final Rule, 29 C.F.R. 1926.62
   d. National Emission Standard for Hazardous Air Pollutants, 40 C.F.R. Part 61
   e. Asbestos Hazardous Emergency Response Act, 40 C.F.R. 763, 29 C.F.R. 1910.134, 1910.1000, 1910.1025, Appendix D, 1910.1200, 1926.58(f) (7), (k), (m), and (n), 1926.103
   f. 29, C.F.R. 1910.120

4. Department of Transportation:
   a. 49 C.F.R. 173.1090
   b. 49 C.F.R. 172
   c. 49 C.F.R. 173
   d. DOT, HM 181 and MH126f

C. State of California Requirements:

1. Statutory Law:
   a. The Carpenter-Presley-Tanner Hazardous Substance Account Act, Health & Safety Code, Sections 25300 *et seq.*
   b. Health and Safety Code, Section 25359.4
   c. Hazardous Waste Control Law, Health & Safety Code, Sections 25100 *et seq.*
   d. Porter-Cologne Water Quality Control Act, Water Code, Sections 13000 *et seq.*
   e. Health and Safety Code, Sections 25249.5, 25915-25924
   f. California Labor Code Chapter 6, including, without limitation, Sections 6360 *et seq.,* 6382, 6408, 6501.5-6501.9, 6503.5, 9021.5, 9030, 9080
   g. Business and Professions Code, including without limitation, Sections 7058.5, 7065.01, 7118.5
   h. Underground Storage of Hazardous Substance Act, Health and Safety Code, Sections 25280 *et seq.*

i. Petroleum Underground Storage Tank Cleanup, Health and Safety Code, Sections 25299.10 *et seq.*
j. Safe Drinking Water and Toxic Enforcement Act of 1986, Health & Safety Code, Sections 25249.5 *et seq.* (Proposition 65)
k. Above Ground Petroleum Storage Act, Health and Safety Code, Sections 25270 *et seq.*
l. Hazardous Materials Release Response Plans and Inventory, Health and Safety Code, Chapter 6.95

2. Administrative Code and Regulations:
   a. 22 CCR Division 4.5, Environmental Health Standards for the Management of Hazardous Waste, Sections 6600 *et seq.*
   b. Cal/OSHA Worker Protection Standards, 8 CCR, Sections 1529, 5208
   c. 23 CCR, Sections 2610 *et seq.*
   d. 8 CCR, Sections 340, 341.10, 1529, 1531, 5144, 5194, 5208, and 5216, Appendix D
   e. 22 CCR, Sections 12100 *et seq.,* 66504, 67740(a) (2) (A), 77702

3. Local Agency Requirements:
   a. Bay Area Air Quality Management District, Fugitive Dust Rules
   b. Bay Area Air Quality Management District Regulation 11-2-303
   c. State Water Resource Control Board, General Construction Activity Stormwater Permit Requirements (Order 92-OS DWQ)

4. Local Agency Requirements:
   a. Santa Clara Fire Department.
   b. City of Santa Clara Ordinances.
   c. County of Santa Clara Ordinances

D. [see document 00700, ¶13.2A]

END OF SECTION

SECTION 01450

TESTING AND INSPECTION

PART 1 GENERAL

1.1 SUMMARY

A. This Section includes descriptions of requirements and procedures for Testing and Inspection, included in:

1.2 Contractor's Quality Control
1.3 Quality of the Work
1.4 Inspections and Tests by Governing Authorities
1.5 Inspections and Tests by Serving Utilities
1.6 Inspections and Tests by Manufacturer's Representatives
1.7 Testing
1.8 Additional Testing and Inspection

1.2 CONTRACTOR'S QUALITY CONTROL

A. Contractor's Quality Control: Ensure that products, services, workmanship and Site conditions comply with requirements of the Contract Documents by coordinating, supervising, testing, and inspecting the Work and by utilizing only suitably qualified and appropriately audited, licensed or trained, personnel.

B. Quality Requirements: Work shall be accomplished in accordance with quality requirements of the Contract Documents, including, by reference, all codes, laws, rules, regulations, and standards. When no quality basis is prescribed, the quality and testing procedures shall be in accordance with the best-accepted practices of the construction industry for the locale of the Project, for projects of this type, or standards set by engineering or technical societies (e.g., ASTM or ASHRAE), whichever is more stringent.

C. Quality Control Personnel: Employ and assign knowledgeable and skilled personnel as necessary to perform quality control functions to ensure that the Work is provided as required.

1.3 QUALITY OF THE WORK

A. Quality of Products: Unless otherwise Indicated or Specified, all products shall be new, free of defects, and fit for the intended use.

B. Quality of Installation: All Work shall be produced plumb, level, square and true, or true to indicated angle, and with proper alignment and relationship between the various elements, as shown on or required by Contract Documents.

C. Protection of Completed Work: Take all measures necessary to preserve completed Work free from damage, deterioration, soiling, and staining, until acceptance by City.

///

///

D. Standards and Code Compliance and Manufacturer's Instructions and Recommendations: Unless more stringent requirements are indicated or specified, comply with manufacturer's instructions and recommendations, reference standards and building code research report requirements in preparing, fabricating, erecting, installing, applying, connecting, and finishing Work.

E. Deviations from Standards and Code Compliance and Manufacturer's Instructions and Recommendations: Secure City's advanced written consent. Document and explain all deviations from reference standards and building code research report requirements and manufacturer's product installation instructions and recommendations, including acknowledgement by the manufacturer that such deviations are acceptable and appropriate for the Project.

F. Verification of Quality: Work shall be subject to verification of quality by City in accordance with provisions of the Contract Documents.

1. Cooperate by making Work available for inspection.
2. Such verification may include mill, plant, shop, or field inspection as required.
3. Provide access to all parts of the Work, including plants where materials or equipment are manufactured or fabricated.
4. Provide all information and assistance as required, including that by and from subcontractors, fabricators, materials suppliers and manufacturers, for verification of quality by City.
5. Applicable provisions of the Contract Documents shall govern Contract Modifications, if any, resulting from such verification activities.

G. Observations by City's Consultants: Periodic and occasional observations of Work in progress will be made by City and City's Consultants as deemed necessary to review progress of Work and general conformance with design intent.

H. Limitations on Inspection, Test and Observation: Neither employment of independent testing and inspection agency nor observations or tests by City and City's Consultants shall in any manner relieve Contractor of obligation to perform Work in full conformance to all requirements of Contract Documents.

I. City's Acceptance and Rejection of Work: City reserves the right to reject all Work not in conformance to the requirements of the Contract Documents, or otherwise defective.

J. Correction of Defective Work: Defective Work shall be modified, replaced, repaired or redone by the Contractor at no change in Contract Sum or Contract Time.

K. Acceptance of Defective Work: Acceptance of defective Work, without specific written acknowledgement and approval of City, shall not relieve the Contractor of the obligation to correct such Work.

L. Contract Adjustment for Defective Work: Should City determine that it is not feasible or in City's interest to require defective Work to be repaired or replaced, an equitable reduction in Contract Sum shall be made by agreement between City and Contractor. If equitable amount cannot be agreed upon, a Construction Change Directive will be issued and the amount in dispute resolved in accordance with applicable provisions of Document 00700, General Conditions.

M. Non-Responsibility for Defective Work: City and City's Consultants disclaim any and all responsibility for Work produced not in conformance with the Contract Documents.

N. Responsibility for Defective Work: Contractor shall have full responsibility for all consequences resulting from defective work, including without limitation all delays, disruptions, extra inspection and correction costs by Contractor and City and re-Work, and extra time and costs of all types. Contractor waives excuses for defective work relating to City's prior review of Submittals and/or prior failure to notice defective work in place on inspection.

1.4 INSPECTIONS AND TESTS BY GOVERNING AUTHORITIES

A. Regulatory Requirements for Testing and Inspection: Comply with California Building Code (CBC) requirements and all other requirements of governing authorities having jurisdiction.

B. Inspections and Tests by Governing Authorities: Cause all tests and inspections required by governing authorities having jurisdiction to be made for Work under this Contract.

1. Such authorities may include, but are not limited to, City of Santa Clara Building Department, Office of Statewide Health Planning Department (OSHPD), Public Works Department, Fire Department, and similar agencies.
2. Except as specifically noted, scheduling, conducting and paying for such inspections shall be solely the Contractor's responsibility.

1.5 INSPECTIONS AND TESTS BY SERVING UTILITIES

Cause all tests and inspections required by serving utilities to be made for Work under this Contract. Scheduling conducting and paying for such inspections shall be solely the Contractor's responsibility.

1.6 INSPECTIONS AND TESTS BY MANUFACTURER'S REPRESENTATIVES

Cause all tests and inspections specified to be conducted by materials or systems manufacturers to be made. Additionally, all tests and inspections required by materials or systems manufacturers as conditions of warranty or certification of Work shall be made, the cost of which shall be included in the Contract Sum.

1.7 TESTING

A. City may select an independent testing and inspection agency or agencies to conduct tests and inspections as indicated in the Contract Documents.

B. All time and costs for Contractor's service related to such tests and inspections shall be included in Contract Time and Contract Sum.

C. Contractor shall notify City in writing (and, if provided, on inspection request form provided by City) and, if directed by City, testing and inspection agency, when Work is ready for specified tests and inspections. Deliver this written notification at least three (3) Working Days before the requested inspection date.

D. Contractor shall pay for all additional charges by testing and inspection agencies and governing authorities having jurisdiction due to the following:

1. Contractor's failure to properly schedule or notify testing and inspection agency or authorities having jurisdiction.

2. Changes in sources, lots, or suppliers of products after original tests or inspections.

3. Changes in means, methods, techniques, sequences, and procedures of construction that necessitate additional testing, inspection, and related services.

4. Changes in mix designs for concrete and mortar after review and acceptance of submitted mix design.

5. Contractor submitted requests to change materials or products, which are accepted, but require testing and/or re-inspection beyond original design.

6. Costs to travel and per diem to perform factory testing off-sites over 50 miles from the jobsite.

7. Cost of re-testing work due to failure of the original test.

E. Tests and special inspections to be paid by City may, where required, include the following:

MATERIAL TESTS

Soil compaction testing

F. Contractor Responsibilities in Inspections and Tests:

1. Unless specified otherwise, notify City and testing agency three (3) Working Days in advance of expected time of each test and inspection, and for all other operations requiring inspection and testing services, by submitting Contractor's inspection request in writing (or, if City provides a specific form, on that form).

   a. When tests or inspections cannot be performed after such notice, reimburse City for testing and inspection agency personnel and travel expenses incurred due to Contractor's negligence.

2. Deliver to laboratory or designated location, adequate samples of materials proposed to be used that require advance testing, together with proposed mix designs.

3. Cooperate with testing and inspection agency personnel, City, and City's Consultants. Provide access to Work areas and off-Site fabrication and assembly locations, including during weekends and after normal Work hours.

4. Provide incidental labor and facilities to provide safe access to Work to be tested and inspected, to obtain and handle samples at the Site or at source of products to be tested, and to store and cure test samples.

5. Provide, at least fifteen (15) Days in advance of first test or inspection of each type, a schedule of tests or inspections indicating types of tests or inspections and their scheduled dates.

G. Testing by the City is done to verify, to the City's satisfaction, that the Work is proceeding properly. It is not to replace the Contractor's quality control/quality assurance program. It is the Contractor's responsibility to perform any testing needed to ensure the Work complies with the Contract Documents, it is safe, and it is performed in an efficient manner.

1.8 ADDITIONAL TESTING AND INSPECTION

A. If initial tests or inspections made by the City or the Testing and Inspection Agency reveal that materials do not comply with Contract Documents, or if City has reasonable doubt that materials do not comply with Contract Documents, additional tests and inspections shall be made as directed.

1. If additional tests and inspections establish that materials comply with Contract Documents, City shall pay all costs for such tests and inspections.

2. If additional tests and inspections establish that materials do not comply with Contract Documents, all costs of such tests and inspections shall be deducted from Contract Sum.

3. If Work requiring inspection is covered by follow-on or follow-up Work before it is inspected, uncover Work so proper inspections can be performed. All costs of such tests and inspections shall be deducted from Contract Sum.

END OF SECTION

THIS PAGE

WAS INTENTIONALLY

LEFT BLANK

SECTION 01500

TEMPORARY FACILITIES AND CONTROLS

PART 1 GENERAL

1.1 SUMMARY

A. Section Includes:

1.2 Temporary Electricity
1.3 Temporary Communications
1.4 Temporary Water
1.5 Fences
1.6 Protection of Public and Private Property
1.7 Tree and Plant Protection
1.8 Temporary Sanitary Facilities
1.9 Temporary Barriers and Enclosures
1.10 Construction Aids
1.11 Water Control
1.12 Pollution Control
1.13 Dust Control
1.14 Erosion Control
1.15 Noise Control
1.16 Traffic Control
1.17 Security
1.18 Solid Waste Services
1.19 Removal of Temporary Facilities and Controls

1.2 TEMPORARY ELECTRICITY

Contractor shall provide, maintain, and pay for electrical power at the Site for construction purposes and for Contractor's trailer(s). Power may be obtained from City, but Contractor must provide all necessary wiring and appurtenances for connection to City's system. Contractor must meter all connections to City's system to determine usage rates.

1.3 TEMPORARY COMMUNICATIONS (NOT USED)

1.4 TEMPORARY WATER

A. Provide, maintain, and pay for suitable quality water service required for construction operations.

B. All water required for and in connection with the Work, including without limitation for dust control, shall be furnished by and at the expense of Contractor. Contractor may be allowed to utilize water from the City, with City's approval. However, City does not guarantee availability of this water. Contractor shall furnish necessary pipe, hose, nozzles, meter, and tools and perform all necessary labor. Unnecessary waste of water will not be permitted. Special hydrant wrenches shall be used for opening and closing fire hydrants; in no case shall pipe wrenches be used for this purpose.

1.5 FENCES

A. All existing fences affected by the Work shall be maintained by Contractor until Final Completion. Fences which interfere with construction operations shall not be relocated or dismantled until City gives written permission to do so, and the period the fence may be left relocated or dismantled has been agreed upon. Where fences must be maintained across the construction easement, adequate gates shall be installed. Gates shall be kept closed and locked at all times when not in use.

B. On completion of the Work across any tract of land, Contractor shall restore all fences to their original or to a better condition and to their original locations.

1.6 PROTECTION OF PUBLIC AND PRIVATE PROPERTY

A. Contractor shall protect, shore, brace, support, and maintain all landscape areas (sod, groundcover, shrubs, trees, etc.), underground pipes, conduits, drains, and other underground construction uncovered or otherwise affected by its construction operations. All pavement, surfacing, driveways, curbs, walks, buildings, utility poles, guy wires, fences, and other surface structures affected by construction operations, together with all landscape areas in yards, parkways, and medians, shall be restored to their original condition, whether within or outside the Site. All replacements shall be made with new materials.

B. Contractor shall be responsible for all damage to landscape areas, streets, roads, highways, shoulders, ditches, embankments, culverts, bridges, and other public or private property, regardless of location or character, which may be caused by transporting equipment, materials, or workers to or from the Work, Site or any part thereof, whether by Contractor or Subcontractors. Contractor shall make satisfactory and acceptable arrangements with the City, or the agency or authority having jurisdiction over the damaged property, concerning its repair or replacement or payment of costs incurred in connection with the damage.

C. All fire hydrants and water control valves shall be kept free from obstruction and available for use at all times.

1.7 TREE AND PLANT PROTECTION

A. Preserve and protect existing trees and plants at site, which are designated to remain and those adjacent to the Site. Contractor's attention is directed to Contract Documents for additional requirements and restrictions as it pertains to the protection of existing trees and plants.

1.8 TEMPORARY SANITARY FACILITIES

A. Provide and maintain required temporary buildings with sanitary toilets for use of all workers. At a minimum, sanitary facilities shall be located at trailer site, staging area, and adjacent to Work area.

B. Sanitary facilities shall be of reasonable capacity, properly maintained throughout the construction period, and obscured from public view to the greatest practical extent. If toilets of the chemically treated type are used, at least one toilet will be furnished for each 20 persons. Contractor shall enforce the use of such sanitary facilities by all personnel at the Site.

C. Comply with all minimum requirements of the Health Department or other public agency having jurisdiction; maintain in a sanitary condition at all times.

1.9 TEMPORARY BARRIERS AND ENCLOSURES

A. Provide barriers to prevent unauthorized entry to construction areas, and to protect existing facilities and adjacent properties from damage.

B. Provide barricades required by governing authorities for public access to existing buildings.

C. Protect vehicular traffic, stored materials, Site, and structures from damage.

D. Provide barricades and covered walkways as required by governing authorities for public rights-of-way.

E. Provide barriers around trees and plants designated to remain.

F. Shield all welding operations from public view with solid barrier.

G. Remove barriers and enclosures only after acceptance of that portion of the Work area.

H. See Subsection 1.16, Traffic Control, for additional requirements.

1.10 CONSTRUCTION AIDS

Contractor shall furnish, install, maintain, and operate all construction aids required by it and its Subcontractors in the performance of the Work, except as otherwise provided herein. Such construction aids shall include elevators and hoists, cranes, temporary enclosures, swing staging, scaffolding and temporary stairs. Construction aids shall be furnished without charge to the Subcontractors, and all necessary erection, maintenance, and operating personnel shall be included. In the event of conflict, the contractor furnishing the equipment shall determine priorities in the best interest of the Project.

1.11 WATER CONTROL

A. Grade Site to drain.

B. Maintain excavations free of water.

C. Protect Site from puddling or running water.

D. Provide water barriers as required to protect Site from soil erosion.

E. Provide for drainage of storm water and such water as may be applied or discharged on the Site in performance of the Work. Drainage facilities shall be adequate to prevent damage to the Work, the Site, and adjacent property.

F. Clean, enlarge and/or supplement existing drainage channels and conduit as necessary to carry all increased runoff attributable to Contractor's operations. Construct dikes as necessary to divert increased runoff from entering adjacent property (except in natural channels), to protect City's facilities and the Work, and to direct water to drainage channels or conduits. Provide ponding as necessary to prevent downstream flooding.

1.12 POLLUTION CONTROL

A. Provide methods, means, and facilities required to prevent contamination of soil, water, or atmosphere by the discharge of noxious substances from construction operations.

B. Provide systems for control of atmospheric pollutants.

1. Prevent toxic concentrations of chemicals.

2. Prevent harmful dispersal of pollutants into the atmosphere.

3. Direct pollutants such as diesel exhaust away from building air intakes.

C. The Contractor shall implement BMPs during construction activities as specified in Section 02007, Storm Water Pollution Prevention. Erosion and sedimentation control practices shall include installation of silt fences, straw wattle, soil stabilization, revegetation, and runoff control to limit increases in sediment in stormwater runoff, including but not limited to, detention basins, straw bales, silt fences, check dams, geofabrics, drainage swales, and sand bag dikes.

D. In the event that dewatering of excavations is required, Contractor shall obtain the necessary permits for discharge of the dewatering effluent from the local jurisdiction. Contractor shall be responsible for assuring that water quality of such discharge meets the appropriate permit requirements prior to any discharge.

1.13 DUST CONTROL

A. Provide positive methods and apply dust control material to minimize raising dust from the construction operations, equipment, and provide positive means to prevent airborne dust from dispersing into the atmosphere.

B. SEE SECTION 01590, CITY MITIGATION MEASURES, FOR ADDITIONAL REQUIREMENTS FOR CONTROLLING DUST AT AND AROUND THE SITE.

1.14 EROSION CONTROL

A. Contractor shall prevent soil erosion on the Site and adjacent property resulting from its construction activities to the maximum extent practical. Effective measures shall be initiated prior to the commencement of clearing, grading, excavation, or other operations that will disturb the natural protection.

B. Work shall be scheduled to expose areas subject to erosion for the shortest possible time, and natural vegetation shall be preserved to the greatest extent practicable. Temporary storage and construction buildings shall be located, and construction traffic routed, to minimize erosion. Temporary fast-growing vegetation or other suitable ground cover shall be provided as necessary to control runoff.

C. See Section 02007, Storm Water Pollution Prevention, for additional requirements.

1.15 NOISE CONTROL

A. Conform to OSHA and City noise ordinance requirements unless a more stringent requirement is otherwise specified in the Contract Documents.

B. City has limited hours of certain types of construction operations. Coordinate work with City's Construction Manager.

C. See Section 01590, City Mitigation Measures, for additional requirements and limitations regarding noise generated by the Contractor.

D. Contractor shall take reasonable measures to avoid unnecessary noise. Such measures shall be appropriate for the normal ambient sound levels in the area during working hours. All construction machinery and vehicles shall be equipped with practical sound-muffling devices, and operated in a manner to cause the least noise consistent with efficient performance of the Work. During construction activities on or adjacent to occupied buildings, and when appropriate, Contractor shall erect screens or barriers effective in reducing noise in the buildings and shall conduct its operations to avoid unnecessary noise which might interfere with the activities of building occupants.

E. Ensure and provide certification to City that all construction equipment and vehicles used for the Work are:

1. Maintained in good mechanical condition

2. Equipped with properly installed engine mufflers

1.16 TRAFFIC CONTROL

A. The City restricts routing of construction traffic and construction vehicles and equipment parking. The Contractor's attention is directed to Section 12, CONSTRUCTION AREA TRAFFIC CONTROL DEVICES, of the Standard Specifications. The Contractor shall supply and install all traffic control devices (including all warning, regulatory, and guide signs) required for the Project. The City will not furnish signs nor any other traffic control devices for the Project.

Prior to start of Work, the Contractor shall submit for City review and approval its Traffic Control and Detour Plan. Submit said plan a minimum of two (2) full Working Days prior to the Preconstruction Conference. If there is no Preconstruction Conference, submit said plan at least two (2) weeks prior to starting the Work. The plan shall include (where necessary) lane closures, detours, no parking areas, signing program for construction, access to private property and business establishments, pedestrian traffic, railroad crossings, transit routes, loading areas, the proposed routing of the construction vehicles, hours required for access and the safe guards and procedures necessary to carry out the Work, as well as where Contractor plans to park construction vehicles and equipment, and other matters which might be important to the safe movement of traffic. The plan shall also indicate placement and type of warning signs, lights, devices, flag persons; and have a schedule for implementation.

B. The plan shall be in a minimum 11" x 17" CAD format. Prove eight (8) copies after approval. Update Traffic Control and Detour Plan with each revision, and once a month.

C. It is imperative that field traffic control be handled in such a manner as to adequately and safely direct all traffic movements in the Project area. The Contractor shall not be allowed to proceed with construction at any time that, in the opinion of the Engineer, traffic control is inadequate to meet the field conditions. Traffic control measures, in addition to those indicated on the approved traffic control plans, may be required as field conditions dictate.

D. The Contractor shall not be allowed to restrict vehicle access to any of the properties in the Project area at all times during construction if practical.

E. Areas to be posted with “No Parking” signs must be verified as correct by the City Police Department. Signs must be verified by the Police Department and posted a minimum of forty-eight (48) hours prior to the start of construction in each area requiring parking restrictions. The Santa Clara Police Department’s verification number is (408) 615-4760. A limited number of temporary “No Parking” signs may, at the sole discretion of the Engineer, be furnished to the Contractor by the City.

F. The Contractor shall conduct his operations as to cause the least possible obstruction and inconvenience to both vehicular and pedestrian traffic.

G. Specific City Traffic Routing and Parking Restrictions: Below are specific City traffic and parking restrictions:

1. Construction Traffic and Vehicles: All inbound and outbound construction related traffic to and from the Site is restricted to public street(s) immediately adjacent to the Site.

2. Construction Parking: Construction vehicles and equipment parking is restricted to areas within the Site and other areas as determined by the City.

3. Alternative Parking: The Contractor can negotiate with any other entity to accommodate parking by its workers. However, the City does not make any guarantee that such parking is available to the Contractor.

H. Street Lane and Sidewalk Closures: Below are specific lane and sidewalk closure requirements and restrictions which shall apply unless specifically modified by an approved Traffic Control Plan. Said Plan may be reviewed or modified by the Engineer at any time when, in the opinion of the Engineer, changes are necessary to provide for the safety, health, welfare, or convenience of the public.

1. Street Lane Closures: Contractor shall provide continuous pedestrian traffic access. All traffic lanes shall remain open between the hours of 6:00-9:00 a.m. and 3:30-7:00 p.m. Lanes may individually be closed between 9:00 a.m. and 3:30 p.m. Maintain two-way traffic (one lane for each direction or movement) at all times in a condition satisfactory to the Engineer. The full width of the traveled way shall be open for use by public traffic beginning at 3:00 p.m. Fridays, and all day on Saturdays, Sundays, designated City holidays, and when construction operation are not actively in progress on Working Days.

   Residents along the road or street shall be provided passage. Convenient access to driveways, houses, and buildings along the road or street shall be maintained. Temporary crossings shall be provided and maintained in good condition.

   The blocking of industrial, commercial, or institutional driveways shall not be allowed. Access shall be provided to permit the movement of vehicles to and from the grounds of such establishments. Contractor shall provide vehicular access to all other types of driveways at all times except during actual construction. Actual construction times, however, shall be limited to the hours of 8:00 a.m. and 5:00 p.m. on authorized Working Days.

   Wherever it is necessary that trenches and excavation be bridged, these bridges shall permit unobstructed flow of traffic or pedestrians (ADA compliant) and shall meet the following criteria:

a. Bridging shall be secured against displacement by using adjustable cleats, angles, bolts, or other devices.

b. Bridging shall be installed to operate with minimum noise.

c. The trench shall be adequately shored, to support the bridging and traffic.

d. Only steel plates shall be used for bridging. Steel plates used for bridging shall extend one foot (minimum) beyond the edges of the trench (See "Steel Plate Benching" Standard Detail).

2. Sidewalk Closures: Contractor must obtain all necessary permits and comply with all City regulations before closing sidewalks.

a. Where walks, pathways, or access ways are closed by the Work , an ADA complaint, alternate walkway shall be provided, preferably within the immediate location of the pathway or access to be closed. Where it is necessary to divert pedestrians into a major detour and/or into a parking lane or traffic area, at no time shall pedestrians be diverted into a portion of a street used for vehicular traffic. Any deviation from the above must have prior approval of the Engineer.

b. At locations where adjacent alternate walkways cannot be provided (i.e., where no pathway or access is available within the immediate location of the interruption) ADA compliant detours shall be clearly planned, marked, and constructed. Appropriate signs and barricades must be installed at the limits of construction and in advance of the closure (or detour) in order to divert pedestrians to the appropriate walkway or detour.

c. Contractor shall provide sufficient signage, indicating by way of arrows and text, pedestrian route closures, and new pathways and detours required for alternate pedestrian routes around the construction. Alternate pedestrian routes, the final sign configuration, the exact wording of the base sign and all mounting locations shall be approved by the City.

3. The Contractor shall pay for all street and sidewalk closures, including but not limited to, the appropriate street closure and temporary directional signage, crosswalks, flag persons as required to control construction traffic and implement the Traffic Control and Detour Plan. The City has waived the Encroachment Permit fees for street closures or diversions, but the Contractor must plan, schedule, apply for, coordinate and implement all necessary street closures or diversions. Contractor shall take all necessary precautions to protect the public from construction activities. Minimum requirements for the directional signage and related signage must comply with City traffic regulations. Contact the City Traffic Engineer at (408) 615-3000 for more information regarding traffic regulations and requirements.

4. The Contractor shall observe all posted traffic signage on and in adjacent neighborhoods.

5. The Contractor shall not be relieved from responsibility for public safety by City's direction, lack of same, or approval of the Traffic Control and Detour Plan with respect to signs, lights, and/or protective devices.

1.17 SECURITY

A. Provide adequate security for equipment and construction materials for the Work that are either erected or stored at the Site.

B. Contractor is responsible for the security and protection of the Contractor's Work and work area.

C. Coordinate with local law enforcement and cooperate at all times with them.

D. If the Contractor fails to adequately secure the Site in the opinion of the City, qualified forces may be employed and costs for the services shall be charged to the Contractor.

E. Maintain fencing at all times.

F. Review and comply with all local ordinances related to emergency response requirements.

G. Develop, submit, update, and maintain an emergency response program for this Project specific to the needs of the Project.

H. Provide list of emergency contact numbers for the Project, including all personnel work and home phone numbers. The Contractor must provide twenty-four hour contact phone numbers for Contractor personnel.

1.18 SOLID WASTE SERVICES

A. Solid waste services consist of garbage, green waste, organic waste, and/or recyclable materials collection by the City's franchise haulers.

B. Mission Trails Waste Systems, Inc. (408-727-5365) is the exclusive franchise hauler for all residential, commercial, and institutional establishments located within the City limits. Contact the City's Streets and Automotive Services Department at (408) 615-3080 for a list of the non-exclusive franchise haulers that provide solid waste services in the industrial use areas within the City limits.

C. Building construction and/or demolition contractors may self-haul the solid waste produced by such business activities in compliance with the City's solid waste services franchise agreements.

1.19 REMOVAL OF TEMPORARY FACILITIES AND CONTROLS

A. Maintain all temporary facilities, staging area, and controls as long as needed for the safe and proper completion of the Work; and remove all such temporary facilities. Promptly clean and repair damage caused by installation or use of temporary facilities. Restore site including staging area(s) to condition equal to or better than the condition prior to the installation of the temporary facility(s). If the Contractor fails or refused to repair the damage promptly, the City may have the necessary work performed and charge the cost to the Contractor or deduct the expense from any amounts due or to become due to the Contractor.

END OF SECTION

SECTION 01540

SITE SECURITY AND SAFETY

PART 1 GENERAL

1.1 SUBMITTALS

A. See Section 01330, Submittal Procedures.

B. Site Security

C. Safety Program

1.2 PROTECTION

A. Continuously maintain protection as necessary to protect the Work, as a whole and in part, and adjacent property and improvements from accidents, injuries, or damage.

B. Properly protect the Work:

1. With lights, guardrails, temporary covers, and barricades.

2. Enclose excavations with proper barricades.

3. Brace and secure all parts of the Work against storm and accident.

4. Provide such additional forms of protection that may be necessary under existing circumstances.

C. Provide and maintain in good condition all protective measures required to adequately protect the public from hazards resulting from the Work and to exclude unauthorized persons from the Work. When regulated by Building Code, Cal OSHA, or other authority, such legal requirements for protection shall be considered as minimum requirements. Be responsible for the protection in excess of such minimum requirements as required.

1.3 CONTROL OF SITE

Ensure that no alcohol, firearms, weapons, or controlled substance enters or is used at the Site. Immediately remove from the Site and terminate the employment of any employee found in violation of this provision.

1.4 SITE SECURITY

A. As part of the Work included within the Contract Price, Contractor shall take and be fully responsible for all reasonably required measures to protect and maintain the security of persons, existing facilities and property at the Site, including without limitation preventing theft, loss, vandalism, graffiti, and improper concealment of personal property of the City and all persons lawfully present on the Site, and including times where workers are not present on the Site. Contractor's measures shall include, at a minimum, installing a temporary chain-link fence with locking gate surrounding the Site if so instructed by the Engineer.

B. No claim shall be made against City by reason of any act of an employee or trespasser, and Contractor shall repair all damage to City's property resulting from Contractor's failure to provide adequate security measures.

C. Contractor shall maintain a lock on the Construction access gate at all times.

D. Contractor shall supply additional security fencing, barricades, lighting, and other security measures as required to protect and control the Site.

1.5 SAFETY PROGRAM

A. Fifteen (15) Days prior to the start of the Work, Contractor shall submit a Safety Program. Comply with the Safety Program and all applicable federal, state, and local regulation codes, rules, law and ordinances.

B. Receipt and/or review of the Safety Program by City, Engineer, or City's representative shall not relieve Contractor of any responsibility for complying with all applicable safety regulations.

C. It is essential that Contractor and each Subcontractor implement an effective and vigorous Safety and Health Program to cover their respective portions of the Work. Subject to Contractor's overall responsibility for Project safety, it shall be understood that the full responsibility for providing a safe place to work with respect to their respective portions of the Work rests with each individual Contractor and Subcontractor.

D. Safety Program components:

1. Injury and Illness Prevention Program (IIPP): Conforming to the General Industrial Safety Orders (CCR Title 8, Division 1, Chapter 4, Subchapter 7, Section 3203), and the California Labor Code (Section 6401.7).

2. Site-Specific Health and Safety Plan (HSP): Describing health and safety procedures that shall be implemented during the Work in order to ensure safety of the public and those performing the Work. Follow the guidelines for a HSP listed in f29 C.F.R. 1910.120.

E. The wearing of hard hats shall be mandatory at all times for personnel on Site. Supply sufficient hard hats to equip properly all employees and visitors.

F. Whenever an exposure exists, appropriate personal protective equipment (PPE) shall be used by all affected personnel. Supply PPE to all personnel under Contractor's direction.

1.6 SAFETY REQUIREMENTS

A. Standards: Maintain the Project in accordance with state and local safety and insurance standards.

B. Hazards Control:

1. Store volatile wastes in covered metal containers and remove from premises daily.

2. Prevent accumulation of wastes that create hazardous conditions.

3. Provide adequate ventilation during use of volatile or noxious substances.

C. Conduct cleaning and disposal operations to comply with local ordinances and anti-pollution laws.

1. Do not burn or bury rubbish or waste material on the Site.

2. Do not dispose of volatile wastes such as mineral spirits, oil, or paint thinner in storm or sanitary drains.

3. Do not dispose of wastes into streams or waterways.

D. Provide accident information on the forms provided by Contractor. This information shall be provided on the same day as the occurrence of said incident.

1.7 SITE SAFETY OFFICER

A. Designate one of Contractor's staff as "Site Safety Officer" whose duties shall include the responsibility for enforcing the environmental protection provisions of the Contract Documents including safety and health, the requirements of the Occupational Safety and Health Act, and other applicable federal, state, and local standards. Submit for review by City Contractor's intended traffic flow plan, security plan, program for temporary structures, housecleaning plan, demolition program, and environmental safety and health plan. After review by City, the implementation and enforcement of these plans shall become the responsibility of the Site Safety Officer. Any changes in the plans shall be requested by Contractor through the Site Safety Officer for written concurrence by City.

B. City's risk management representative(s) shall be allowed access to accident/injury and illness reports, inspection reports, scheduling and construction meetings, and safety meetings.

END OF SECTION

THIS PAGE

WAS INTENTIONALLY

LEFT BLANK

SECTION 01580

PROJECT IDENTIFICATION SIGNS

PART 1 GENERAL

1.01 SUMMARY

A. Section Includes:

1. Project identification sign.
2. Project informational signs.
3. Maintenance.
4. Turnover.

B. Related Sections

1. Section 01100, Summary of Work
2. Section 01500, Temporary Construction

1.02 QUALITY ASSURANCE

A. Design sign and structure to withstand 50-miles/hr winds.

B. Sign Printer: Experienced as a professional sign printer for a minimum of five years.

C. Finishes & Painting: Must use materials that can withstand weathering, fading, and chipping for duration of two years.

1.03 SUBMITTALS

A. See Section 01330, Submittal Procedures, for general shop drawing and product data requirements.

B. Provide submittals 14 Days prior to the start of the Work showing content, layout, lettering, color, structure, sizes, and proposed location of sign, as well as product data for proposed materials.

PART 2 PRODUCTS

2.01 SIGN MATERIALS

A. Structure and Framing: New wood, and structurally adequate for required duration.

B. Sign Surfaces: Exterior grade plywood with medium density overlay, minimum ¾-inch thick, Grade A-C plywood, and standard large sizes to minimize joints.

C. Rough Hardware: Galvanized.

D. Paint and Primers: Exterior quality, two coats of both primer and paint; sign background of color as selected and approved by City.

2.02 PROJECT IDENTIFICATION SIGN

A. One digitally plotted sign, laminated, backed and mounted. 48 square feet, and bottom of sign a minimum of 6 feet above ground.

B. Content:

1. To be provided by the City.

C. Specific Requirements:

1. Plotted Image
   4 color Bubble Jet Digital output on one piece 5 mil vinyl sheet
   UV safe or solvent based inks suitable for color retention in outdoor setting for 2 years

2. Image Lamination
   5 mil pressure sensitive lamination film clear mat finish. Lamination must be suitable for outdoor setting for 2 years.

3. Image Backing
   Image shall be permanently backed on Alumalite® or equal Corrugated Plastic Core, Aluminum Surface rigid composite.
   Surface is .016-inch high-gloss painted aluminum on both sides for rigidity and to minimize warping
   Specifications Core: Corrugated PolyAllomer (CPA) sizes up to 5’ x 10’
   Thickness: 6mm & 10mm
   Lengths and Width Tolerances: ±1/2"
   Square Tolerance: Diagonals within 1/8"
   Wind Load: 6mm 120+ mph, 10mm 140+ mph
   when properly supported on four edges
   Bond Test: ASTM C481-A (Cyclic aging): PASS
   Fire Test: ASTM E84 "Class A" Flame Spread

2.03 PROJECT INFORMATION SIGN (NOT USED)

PART 3 – EXECUTION

3.01 INSTALLATION

A. Install project identification sign within forty-five (45) days after date of Notice to Proceed.

B. Erect the project identification sign(s) as specified and shown on the Contract Documents. Final location(s) shall be reviewed and approved by the Engineer before installation by Contractor.

C. Erect supports and framing on secure foundation, rigidly braced and framed to resist wind loadings.

D. Paint exposed surfaces of sign supports and framing with standard colors selected by the City.

3.02 MAINTENANCE

A. Maintain signs and supports, keep clean and repair deterioration and damage.

3.03 TURNOVER (NOT USED)

END OF DOCUMENT

THIS PAGE

WAS INTENTIONALLY

LEFT BLANK

SECTION 01590

CITY MITIGATION MEASURES

PART 1 GENERAL

1.1 SUMMARY

A. This Section includes description of requirements and procedures for Mitigation Measures, included in:

1.04 Cultural Resources & Human Remains
1.05 Air Quality

1.02 RELATED SECTIONS

Section 01100 - Summary of Work

1.03 GENERAL

The Contractor shall comply with and implement the mitigation measures listed in this Section, as well as other City mitigation measures listed in the Contract Documents.

1.04 CULTURAL RESOURCES & HUMAN REMAINS

A. If it is determined by the City or discovered during the performance of the Work that the Site contains archaeological resources, the City and Planning Division shall be notified and all work within the proximity of the find shall temporarily halt so that the City-approved archaeologist can examine the find and document its provenience and nature (through drawings, photographs, written description, etc., as necessary).

B. If human remains are encountered during Project construction, the Contractor shall notify the Santa Clara County Coroner's Office immediately. The coroner will determine if the remains are those of a Native American, and if they are, will notify the Native American Heritage Commission.

C. The Contractor shall receive a non-compensable time extension for delays resulting from the discovery of cultural resources or human remains beyond the Contractor's control as defined in Paragraph 15.2B of Document 00700, General Conditions.

D. Archaeological And Paleontological Rights:

1. When working within the archaeologically sensitive area(s) identified by the City or as specified in the Contract Documents, the Contractor shall notify the City at least five (5) full Working Days in advance of performing any earth-moving activities to enable the City to provide archaeological monitoring of the work. The City has retained the services of a qualified archaeologist to monitor earthmoving activities of the Project.

///

///

2. Monitoring shall consist of coordinating subsurface work to allow for the careful examination of vertical and horizontal soil relationships for the purpose of defining positive archaeological finds (prehistoric and/or historic). In the event that cultural resources are encountered, all work within the proximity of the find shall temporarily halt so that the archaeologist can examine the find and document its provenience and nature (through drawings, photographs, written description, etc., as necessary). The monitor will then direct the work to either proceed if the find is deemed to be insignificant or is adequately documented and resolved, or continue elsewhere, as appropriate, until adequate mitigation measures are adopted or the matter is otherwise resolved to the satisfaction of the City.

3. The Contractor shall notify the City a minimum of two (2) full working days in advance of canceling scheduled subsurface construction work including grading or similar work to provide the City with sufficient notice to cancel archaeological monitoring services.

4. The City may suffer damages in the event that the Contractor failed to comply with the required notification. The parties hereto agree that it is and will be extremely difficult to determine the actual damage that the City will sustain in the event that the City does not receive the required notification; and it is therefore agreed that the Contractor will pay to the City the sum of $1,000 for each occurrence of the Contractor's failure to provide the required notification. The Contractor agrees to pay said liquidated damages herein provided for, and further agrees that the City may deduct the amount thereof from any moneys due or that may become due to the Contractor under the Contract. In addition, in the event that the Contractor fails to comply with the required notification, the Contractor shall cease all construction operations, including non- surface constructions, until the required notification is provided in accordance with the Provisions of this Section.

1.05 AIR QUALITY

A. Water all active construction areas at least twice daily or as needed to prevent dust.

B. Cover all trucks hauling soils, sand, and other loose materials, or all trucks shall maintain at least 2 feet of freeboard.

C. Pave, or apply water three times daily, or apply nontoxic soil stabilizers on all unpaved roads, parking areas, and construction staging areas.

D. Sweep daily with water weepers all paved access roads, parking area, and staging areas at construction sites as needed to prevent dust.

E. Sweep streets daily with water sweepers, if visible soil material is carried onto adjacent public streets.

F. Hydroseed or apply nontoxic soil stabilizers to inactive construction areas (previously graded areas inactive for ten days or more).

G. Enclose, cover, water twice daily, or apply nontoxic soil binders to exposed stockpiles (dirt, sand, etc.).

H. Traffic speeds on unpaved roads shall be limited to 15 miles per hour.

I. Install sandbags or other erosion-control measures to prevent silt runoff to public roadways during rainy season construction (November through April).

J. Other related requirements by the City:

1. Dust-proof chutes shall be used for loading construction debris onto trucks. Alternative means of loading construction debris may be permitted if approved by the City.

2. Contractor shall suspend dust-producing activities during periods of high winds when dust control measures are unable to avoid visible dust plumes.

3. During the dry season (May to October) provide equipment and staffing for watering of all exposed or disturbed soil surfaces at least twice daily. See Section 02007, Storm Water Pollution Prevention.

4. Any fine materials transported by truck will be covered or wetted down to control dust.

5. Demolition of pre-1980 buildings shall comply with BAAQMD Regulation 11, Rule 2: Hazardous Materials, Asbestos Demolition, Renovation and Manufacturing.

1.06 SPECIAL-STATUS BIRDS AND MIGRATORY PASSERINES AND RAPTORS PROTECTION MEASURES

A. Note that the tank site is located near active burrowing owl habitat. Construction activity during the migratory period is prohibited. This migratory period is typically from February 1st through August 31st. The City will monitor and survey the burrowing owls and provide any precaution information to the Contractor for working in the area. Contractor shall take all necessary measures to protect the burrowing owls and their habitat.

END OF SECTION

THIS PAGE

WAS INTENTIONALLY

LEFT BLANK

SECTION 01600

PRODUCT REQUIREMENTS

PART 1 GENERAL

1.1 SUMMARY

A. Section includes:

1.2 Products
1.3 Product Options and Substitutions
1.4 Product Delivery Requirements
1.5 Shipping Requirements
1.6 Product Storage and Handling Requirements

1.2 PRODUCTS

A. Products: New material, machinery, components, equipment, fixtures, and systems forming the Work. Does not include machinery and equipment used for preparation, fabrication, conveying and erection of the Work. Products may also include existing materials or components required for reuse.

B. Do not use materials and equipment removed from existing premises, except as specifically permitted by the Contract Documents.

C. For similar components, provide interchangeable components of the same manufacturer.

1.3 PRODUCT OPTIONS AND SUBSTITUTIONS

A. Summary: This paragraph 1.3 describes procedures for selecting products and requesting substitutions of unlisted materials in lieu of materials named in the Specifications or approved for use in Addenda that were not already the subject of a Document 00660, Substitution Request Form, submittal as provided in Document 00200, Instructions to Bidders.

B. Contractor's Options:

1. For products specified only by reference standard: Select any product meeting that standard.

2. For products specified by naming one or more products or manufacturers:

a. Select products of any named manufacturer meeting specifications.
b. If product becomes unavailable due to no fault of Contractor, submit Request for Substitution (RFS), including all information contained in this Section 01600 and a fully executed Document 00660, Request for Substitution, but using the term "Contractor" each place the term "Bidder" appears in that form.

///

C. Substitutions:

1. Except as provided in Document 00200, Instructions to Bidders, with respect to "or equal" items, City will consider Contractor's substitution requests only when product becomes unavailable due to no fault of Contractor. Requests for review of proposed substitute items will not be accepted from anyone other than Contractor. The RFS shall state the extent, if any, to which the evaluation and acceptance of the proposed substitute will prejudice Contractor's achievement of Substantial Completion on time, and whether or not acceptance of the substitute for use in the Work will require a change in any of the Contract Documents (or in the provisions of any other direct contract with City for work on the Project).

2. Submit separate RFS (and four copies) for each product and support each request with:

   a. Product identification.
   b. Manufacturer's literature.
   c. Samples, as applicable.
   d. Name and address of similar projects on which product has been used, and dates of installation.
   e. Name, address, and telephone number of manufacturer's representative or sales engineer.
   f. For construction methods: Detailed description of proposed method; drawings illustrating methods.

3. Where required, itemize a comparison of the proposed substitution with product specified and list significant variations including, but not limited to dimensions, weights, service requirements, and functional differences. If variation from product specified is not pointed out in submittal, variation will be rejected even though submittal was favorably reviewed. Identify all variations of the proposed substitute from that specified in the RFS and indicate available maintenance, repair, and replacement service.

4. State whether the substitute will require a change in any of the Contract Documents (or provisions of any other direct contract with City for work on the Project) to adapt the design of the proposed substitute, and whether or not incorporation or use of the substitute in connection with Work is subject to payment of any license fee or royalty. Submit data relating to changes in construction schedule.

5. Include accurate cost data comparing proposed substitution with product and amount of net change in Contract Sum including, but not limited to, an itemized estimate of all costs or credits that will result directly or indirectly from acceptance of such substitute, including costs of redesign and claims of other contractors affected by the resulting change, all of which will be considered by City in evaluating the proposed substitute. City may require Contractor to furnish additional data about the proposed substitute.

6. City will not consider substitutions for acceptance (or, in City's sole discretion, City may make Contractor solely responsible for all resulting costs, expenses and other consequences) when a substitution:

   a. Results in delay meeting construction Milestones or completion dates.

b. Is indicated or implied on submittals without formal request from Contractor.
c. Is requested directly by Subcontractor or supplier.
d. Acceptance will require substantial revision of Contract Documents.
e. Disrupts Contractor's job rhythm or ability to perform efficiently.

7. Substitute products shall not be ordered without written acceptance of City.

8. City will determine acceptability of proposed substitutions and reserve right to reject proposals due to insufficient information.

9. Accepted substitutions will be evidenced by a Change Order.

10. All Contract Documents requirements apply to Work involving substitutions.

D. Contractor's Representation and Warranty:

1. Contractor's RFS constitute a representation and warranty that Contractor:

a. Has investigated proposed product and determined that it meets or exceeds, in all respects, specified product.
b. Will provide the same warranty for substitution as for specified product.
c. Will coordinate installation and make other changes that may be required for Work to be complete in all respects.
d. Waives claims for additional costs which may subsequently become apparent.
e. Will compensate City for additional redesign costs associated with substitution.
f. Will be responsible for Construction Schedule slippage due to substitution.
g. Will be responsible for Construction Schedule delay due to late ordering of available specified products caused by requests for substitution that are subsequently rejected by City.
h. Will compensate City for all costs; including extra costs of performing Work under Contract Documents, extra cost to other contractors, and any claims brought against City, caused by late requests for substitutions or late ordering of products.

E. City's Duties:

1. Review Contractor's RFS with reasonable promptness.

2. Notify Contractor in writing of decision to accept or reject requested substitution.

F. Administrative Requirements:

1. Specified products, materials, or systems for Project may include engineering or on-file standards required by the regulatory agency. Contractor's substitution of products, materials or systems may require additional engineering, testing, reviews, approvals, assurances, or other information for compliance with regulatory agency requirements or both. Provide all agency approvals or other additional information required and pay additional costs for required City services made necessary by the substitution at no increase in Contract Sum or Contract Time, and as a part of substitution proposal.

1.4 PRODUCT DELIVERY REQUIREMENTS

A. Deliver products in accordance with manufacturer's instructions.

B. Promptly inspect shipments to assure that products comply with requirements, quantities are correct, and products are undamaged.

1.5 SHIPPING REQUIREMENTS

A. Preparation for Shipment. All equipment shall be suitably packaged to facilitate handling and to protect against damage during transit and storage. All equipment shall be boxed, crated, or otherwise completely enclosed and protected during shipment, handling, and storage. All equipment shall be protected from exposure to the elements and shall be kept dry at all times.

1. Painted and coated surfaces shall be protected against impact, abrasion, discoloration, and other damage. Painted and coated surfaces which are damaged prior to acceptance of equipment shall be repainted to the satisfaction of City.

2. Grease and lubricating oil shall be applied to all bearings and similar items.

B. Shipping. Before shipping each item of equipment shall be tagged or marked as identified in the delivery schedule or on the Shop Drawings. Complete packing lists and bills of material shall be included with each shipment.

1.6 PRODUCT STORAGE AND HANDLING REQUIREMENTS

A. Store products only in staging area or other safe area per provisions of Section 01100, Summary of Work.

B. Handle, store, and protect products in accordance with manufacturer's instructions, with seals and labels intact and legible. Store sensitive products in weather-tight, climate-controlled enclosures.

C. For exterior storage of fabricated products, place on appropriate supports, above ground.

D. Cover products subject to deterioration with impervious sheet covering. Provide ventilation to avoid condensation.

E. Store loose granular materials on solid flat surfaces in a well-drained area.

F. Provide equipment and personnel to store products by methods to prevent soiling, disfigurement, or damage.

G. Arrange storage of products to permit access for inspection. Periodically inspect to assure products are undamaged and are maintained under specified conditions.

H. Without limiting the foregoing:

1. Contractor shall bear the responsibility for delivery of equipment, spare parts, special tools, and materials to the Site and shall comply with the requirements specified herein and provide required information concerning the shipment and delivery of the materials specified in Contract Documents. These requirements also apply to any subsuppliers making direct shipments to the Site. Acceptance of the equipment shall be made only after it is installed, tested, placed in operation and found to comply with all the specified requirements.

2. All items shall be checked against packing lists immediately on delivery to the Site for damage and for shortages. Damage and shortages shall be remedied with the minimum of delay.

3. No metalwork (miscellaneous steel shapes and reinforcing steel) shall be stored directly on the ground. Masonry products shall be handled and stored in a manner to hold breakage, chipping, cracking, and spalling to a minimum. Cement, lime, and similar products shall be stored off the ground on pallets and shall be covered and kept completely dry at all times. Pipe fittings and valves may be stored out of doors, but must be placed on wooden blocking. PVC pipe, geomembranes, plastic liner, and other plastic materials shall be stored off the ground on pallets and protected from direct sunlight.

4. Pumps, motors, electrical equipment, and all equipment with antifriction or sleeve bearings shall be stored in weathertight structures maintained at a temperature above 60°F. Electrical equipment, controls, and insulation shall be protected against moisture and water damage. All space heaters furnished in equipment shall be connected and operated continuously.

5. Equipment having moving parts such as gears, bearings, and seals, shall be stored fully lubricated with oil, grease, etc., unless otherwise instructed by the manufacturer. Manufacturer's storage instructions shall be carefully followed by Contractor.

6. When required by the equipment manufacturer, moving parts shall be rotated a minimum of twice a month to ensure proper lubrication and to avoid metal to metal "welding". Upon installation of the equipment, Contractor shall, at the discretion of City, start the equipment at one-half load for an adequate period of time to ensure that the equipment does not deteriorate from lack of use.

7. When required by the equipment manufacturer, lubricant shall be changed upon completion of installation and as frequently as required thereafter during the period between installation and acceptance. New lubricants shall be put into the equipment by Contractor at the time of acceptance.

8. Equipment and materials shall not show any pitting, rust, decay, or other deleterious effects of storage when installed in the Work.

9. In addition to the protection specified for prolonged storage, the packaging of spare units and spare parts shall be for export packing and shall be suitable for long-term storage in a damp location. Each spare item shall be packed separately and shall be completely identified on the outside of the container.

10. Handling. Stored items shall be laid out to facilitate their retrieval for use in the Work. Care shall be taken when removing the equipment for use to ensure the precise piece of equipment is removed and that it is handled in a manner than does not damage the equipment.

END OF SECTION

THIS PAGE

WAS INTENTIONALLY

LEFT BLANK

SECTION 01715

EXISTING UNDERGROUND FACILITIES

PART 1 GENERAL

1.1 PUBLIC FACILITIES AFFECTED

It is the Contractor's responsibility to verify the location of all existing utilities with the appropriate utility agencies prior to the commencement of construction. Contractor shall notify all utility owners 48-hours prior to the commencement of work adjacent to the utility. Contact Underground Services Alert (USA) at 1 (800) 227-2600.

1.2 PRIVATE FACILITIES AFFECTED

No attempt has been made to locate private utilities on private property such as sprinkler irrigation systems or electrical conduits. Contact the property owners prior to construction.

END OF SECTION

THIS PAGE

WAS INTENTIONALLY

LEFT BLANK

SECTION 01740

CLEANING

PART 1 GENERAL

1.1 SECTION INCLUDES

1.2 Progress Cleaning

1.3 Final Cleaning

1.2 PROGRESS CLEANING

A. Contractor shall perform periodic cleaning to ensure that any streets and other City and public properties are maintained free from accumulation of waste materials, dust, mud, and debris.

B. Where required, Contractor shall wet down surfaces to lay dust and prevent the blowing of dust to nearby residences, businesses, or public properties.

C. Contractor shall keep all streets clean and free of dust, mud, and debris resulting from Contractor's operations. Daily cleanup throughout the job will be necessary as Contractor progresses with its Work, but extra attention to cleanup shall be made prior to weekends and holidays. Without limiting the foregoing, Contractor shall remove trench spoil along traveled ways daily; grade and vacuum broom surfaces. No water flushing into storm drains or other waterways will be allowed.

D. All dust, mud, spoils, and construction debris shall be removed at least daily from all roadways, ditches, shoulders, and private property (fills or spoils placed on private property at private property owner's written request excepted).

E. Disposal of Materials:

1. As part of the scope of Work included within the Contract Sum, Contractor shall be fully responsible for disposing of all construction debris, dirt, and spoils resulting from the Work.

2. All waste materials, debris, dirt, and rubbish shall be disposed of at sites to be chosen by Contractor in accordance with applicable local, state, and federal regulations.

3. Contractor is cautioned that the County of Santa Clara and cities within the county have regulations governing the disposal of rubble, broken pavement, and similar materials.

4. Contractor shall become familiarized with the requirements of the agency having jurisdiction over any contemplated disposal site and shall comply with all such requirements.

F. All excess soil from performance of Work shall be disposed at a Class I, II, or III landfill at sites to be chosen by Contractor in accordance with applicable local, state, and federal regulations.

G. If Contractor does not maintain the Site, any affected streets, sidewalks, or other public or private facilities in a clean and safe condition, in the opinion of City, then City shall have the option of using outside equipment to perform the cleanup and such cost will be withheld from the Contract Sum.

1.3 FINAL CLEANING

A. Contractor shall execute final cleaning prior to final inspection, using only properly skilled workers.

B. Clean equipment and fixtures to a sanitary condition, clean or replace filters of mechanical equipment operated during construction, clean ducts, blowers and coils of units operated without filters during construction.

C. Clean Site; mechanically sweep paved areas.

D. Remove waste and surplus materials, rubbish, and construction facilities from Site.

END OF SECTION

SECTION 01770

CONTRACT CLOSEOUT

PART 1 GENERAL

1.1 SUMMARY

A. Section includes description of contract closeout procedures including:

1.2 Removal of Temporary Construction Facilities
1.3 Substantial Completion
1.4 Final Completion
1.5 Final Cleaning
1.6 Project Record Documents
1.7 Material, Equipment, and Finish Data
1.8 Project Guarantee
1.9 Warranties
1.10 Turn-In
1.11 Release of Claims
1.12 Building Inspection Coordination
1.13 Liquidated Damages

1.2 REMOVAL OF TEMPORARY CONSTRUCTION FACILITIES

A. Remove temporary materials, equipment, services, and construction prior to Substantial Completion inspection.

B. Clean and repair damage caused by installation or use of temporary facilities.

C. Restore permanent facilities used during construction to specified condition.

D. Comply with paragraph 1.18 of Section 01500, Removal of Temporary Facilities and Controls.

1.3 SUBSTANTIAL COMPLETION

A. Substantial Completion is defined in Document 00050, References and Definitions. When Contractor considers Work or designated portion of the Work as Substantially Complete, submit written notice to City, with list of items remaining to be completed or corrected.

B. Within reasonable time, City will inspect to determine status of completion.

C. Should City determine that Work is not Substantially Complete, City will notify Contractor in writing, listing all defects and omissions.

D. Contractor shall remedy deficiencies and send a second written notice of Substantial Completion to the City. Upon receipt of proper notice, the City will reinspect the Work. If deficiencies previously noted are not corrected on reinspection, then Contractor shall pay City's cost of the reinspection.

E. When City concurs that Work is Substantially Complete, City will issue a Certificate of Substantial Completion, accompanied by Contractor's list of items to be completed or corrected as verified by City.

F. Manufactured units, equipment and systems that require startup must have been started up and run for periods prescribed by City and all associated training completed and all spare parts and "Operation and Maintenance" manuals turned over to the City before a Certificate of Substantial Completion will be issued.

G. A punch list examination will be performed upon Substantial Completion. One follow-up review of punch list items for each discipline will be provided. If further Site visits are required to review punch list items due to incompleteness of the Work by Contractor, Contractor will reimburse City for costs associated with these visits.

1.4 FINAL COMPLETION

A. Final Completion is defined in Document 00050, References and Definitions. Final Completion occurs when Work meets requirements for City's Final Acceptance. When Contractor considers Work is Finally Complete, submit written certification that:

1. Contractor has inspected Work for compliance with Contract Documents, and all requirements for Final Acceptance have been met.

2. Except for Contractor maintenance after Final Acceptance, Work has been completed in accordance with Contract Documents and deficiencies listed with Certificate of Substantial Completion have been corrected. Equipment and systems have been tested in the presence of City, and are operative. All user manuals and warranties have been submitted and accepted by the City.

3. Work is complete and ready for final inspection.

B. In addition to submittals required by the Contract Documents, provide submittals required by governing authorities and submit final statement of accounting giving total adjusted Contract Sum, previous payments, and sum remaining due.

C. When City finds Work is acceptable and final closeout submittals are complete, City may, if needed, issue final Change Order reflecting approved adjustments to Contract Sum not previously made by Change Order. Should City determine that Work is incomplete or defective:

1. City will notify Contractor, in writing, listing the incomplete or defective items.

2. Contractor shall promptly remedy the deficiencies and notify the City when it is ready for reinspection.

3. When City determines that the Work is acceptable under the Contract Documents, City will request Contractor to make closeout submittals.

///

///

D. Final adjustments of accounts:

1. Submit a final statement of accounting to City, showing all adjustments to the Contract Sum and complete and execute Document 00650, Agreement and Release of Any and All Claims.

2. If so required, City shall prepare a final Change Order for submittal to Contractor, showing adjustments to the Contract Sum that were not previously made into a Contract Modification.

1.5 FINAL CLEANING

Contractor shall comply with all applicable requirements in Section 01740, Cleaning.

1.6 PROJECT RECORD DOCUMENTS

Contractor shall comply with all applicable requirements in Section 01780, Project Record Documents.

1.7 MATERIAL, EQUIPMENT, AND FINISH DATA

Contractor shall submit two sets of data for primary materials, equipment, and finishes as required under each Specification Section prior to final inspection, bound in 8-½ inches by 11 inches three-ring binders with durable plastic covers to City for City's records.

1.8 PROJECT GUARANTEE

A. Requirements for Contractor's guarantee of completed Work are included in Article 9 of Document 00700, General Conditions. Contractor shall guarantee Work done under Contract against failures, leaks, or breaks or other unsatisfactory conditions due to defective equipment, materials, or workmanship, and perform repair work or replacement required, at Contractor's sole expense, for period of one (1) year from date of Final Acceptance, unless a longer period is specified elsewhere in the Contract Documents.

B. Neither recordation of Final Acceptance nor final certificate for payment nor provision of the Contract nor partial or entire use or occupancy of premises by City shall constitute acceptance of Work not done in accordance with Contract Documents nor relieve Contractor of liability in respect to express warranties or responsibility for faulty materials or workmanship.

C. City may make repairs to defective Work as set forth in paragraph 9.3 of Document 00700, General Conditions, if, within five (5) Working Days after mailing of written notice of defective work to Contractor or authorized agent, Contractor neglects to make or undertake repair with due diligence; provided, however, that in case of leak or emergency where, in opinion of City, delay would cause hazard to health or serious loss or damage, repairs may be made without notice being sent to Contractor, and Contractor shall pay cost thereof.

D. If, after installation, operation, or use of materials or equipment to be provided under Contract proves to be unsatisfactory to City, City shall have right to operate and use materials or equipment until said materials and equipment can, without damage to City, be taken out of service for correction or replacement. Period of use of defective materials or equipment pending correction or replacement shall in no way decrease guarantee period required for acceptable corrected or replaced items of materials or equipment.

E. Nothing in this Section shall be construed to limit, relieve, or release Contractor's, Subcontractors', and equipment suppliers' liability to City for damages sustained as result of latent defects in equipment caused by negligence of suppliers' agents, employees, or Subcontractors. Stated in another manner, warranty contained in the Contract Documents shall not amount to, nor shall it be deemed to be, waiver by City of any rights or remedies (or time limits in which to enforce such rights or remedies) it may have for defective workmanship or defective materials under laws of this State pertaining to acts of negligence.

1.9 WARRANTIES

A. Execute Contractor's submittals and assemble warranty documents, and installation, operations and maintenance manuals described in Section 01330, Submittals, executed or supplied by Subcontractors, suppliers, and manufacturers.

1. Provide table of contents and assemble in 8½ inches by 11 inches three-ring binder with durable plastic cover, appropriately separated and organized.

2. Include contact names and phone numbers for City personnel to call during warranty period.

3. Assemble in Specification Section order.

B. Submit material prior to final application for payment.

1. For equipment put into use with City's permission during construction, submit within 14 Days after first operation.

2. For items of Work delayed materially beyond Date of Substantial Completion, provide updated submittal within 14 Days after acceptance, listing date of acceptance as start of warranty period.

C. Warranties are intended to protect City against failure of Work and against deficient, defective and faulty materials and workmanship, regardless of sources.

D. Limitations: Warranties are not intended to cover failures that result from the following:

1. Unusual or abnormal phenomena of the elements

2. Vandalism after Substantial Completion

3. Insurrection or acts of aggression including war

E. Related Damages and Losses: Remove and replace Work which is damaged as result of defective Work, or which must be removed and replaced to provide access for correction of warranted Work.

F. Warranty Reinstatement: After correction of warranted Work, reinstate warranty for corrected Work to date of original warranty expiration or to a date not less than one year after corrected Work was done, whichever is later.

G. Replacement Cost: Replace or restore failing warranted items without regard to anticipated useful service lives.

H. Warranty Forms: Submit drafts to City for approval prior to execution. Forms shall not detract from or confuse requirements or interpretations of Contract Documents.

1. Warranty shall be countersigned by manufacturers.

2. Where specified, warranty shall be countersigned by Subcontractors and installers.

I. Rejection of Warranties: City reserves right to reject unsolicited and coincidental product warranties that detract from or confuse requirements or interpretations of Contract Documents.

J. Term of Warranties: For materials, equipment, systems, and workmanship, warranty period shall be one (1) year minimum from date of Final Completion of entire Work except where:

1. Detailed specifications for certain materials, equipment or systems require longer warranty periods.

2. Materials, equipment, or systems are put into beneficial use of City prior to Final Completion as agreed to in writing by City.

K. Warranty of Title: No material, supplies, or equipment for Work under Contract shall be purchased subject to any chattel mortgage, security agreement, or under a conditional sale or other agreement by which an interest therein or any part thereof is retained by seller or supplier. Contractor warrants good title to all material, supplies, and equipment installed or incorporated in Work and agrees upon completion of all Work to deliver premises, together with improvements and appurtenances constructed or placed thereon by Contractor, to City free from any claim, liens, security interest, or charges, and further agrees that neither Contractor nor any person, firm, or corporation furnishing any materials or labor for any Work covered by Contract shall have right to lien upon premises or improvement or appurtenances thereon. Nothing contained in this paragraph, however, shall defeat or impair right of persons furnishing materials or labor under bond given by Contractor for their protection or any rights under law permitting persons to look to funds due Contractor in hands of City.

1.10 TURN-IN

Contract Documents will not be closed out and final payment will not be made until all personnel Identification Media, vehicle permits, keys issued to Contractor during prosecution of Work, and letters from property owners pursuant to paragraph 1.2 of Document 01740, Cleaning, are turned in to City.

1.11 RELEASE OF CLAIMS

Contract Documents will not be closed out and final payment will not be made until Document 00650, Agreement and Release of Any and All Claims, is completed and executed by Contractor and City.

///

///

///

1.12 BUILDING INSPECTION COORDINATION

When required, Contractor shall coordinate with City Building Inspectors a final inspection as part of the process for obtaining the Substantial Completion certificate.

1.13 LIQUIDATED DAMAGES

If assessment of Liquidated Damages as provided by the Contract Documents occurs during the Project, such assessment shall stop at the date the Contractor achieves Substantial Completion. Contractor shall then have a period as specified in sub-article 3.1 of Document 00520, Agreement, and sub-section 1.6 of Section 01100, Summary of Work, to complete all activities to achieve Final Completion. If Final Completion is not achieved in this period, Liquidated Damages shall resume at the daily rates specified in Document 00520, Agreement, until such time as Final Completion is achieved by the Contractor.

END OF SECTION

SECTION 01780

PROJECT RECORD DOCUMENTS

PART 1 GENERAL

1.1 SUMMARY

A. This Section specifies administrative and procedural requirements for Project Record Documents.

B. Project Record Documents required include:

1. Marked-up copies of Drawings
2. Mark-up copies of Shop Drawings
3. Newly prepared Drawings (e.g., Change Orders).
4. Marked-up copies of Specifications, Addenda, Change Orders, and other Contract Modifications
5. Marked-up Project Data submittals
6. Record Samples
7. Field records for variable and concealed conditions
8. Record information on Work that is recorded only schematically
9. Other Project Record Documents as specified in other Sections of the Contract Documents.

C. Specific Project Record Documents requirements that expand requirements of this Section are included in the individual Sections of the Specifications.

D. General Project closeout requirements are included in Section 01770, Contract Closeout.

E. Maintenance of Documents and Samples.

Contractor shall:

1. Store Project Record Documents and Samples in the field office apart from Contract Documents used for construction.
2. Do not permit Project Record Documents to be used for construction purposes.
3. Maintain Project Record Documents in good order and in a clean, dry, legible condition.
4. Make documents and samples available at all times for inspection by the Engineer.

F. The Engineer will provide one full size set of the Drawings and one project manual for Contractor's use for recording as-built conditions.

G. The Engineer will make no progress or final payment if the Project Record Documents are not current at the time the Contractor submits its Application for Payment.

1.2 PROJECT RECORD DRAWINGS

Contractor shall perform the following:

A. Mark-up Procedure: During the construction period, maintain a set of Contract Drawings and Shop Drawings for Project Record Documents purposes. Label each document (on first sheet or page) "PROJECT RECORD" in 2-inch high printed letters. Keep record documents current. Note: A reference by number to a Change Order, Construction Change Directive, RFI, RFP, Field Instructions, or other such document is not acceptable as sufficient record information on any record document. Do not permanently conceal any Work until required information has been recorded.

1. Mark all Project Record Drawings to indicate the actual installation where the installation varies appreciably from the installation shown originally. Give particular attention to information on concealed elements that would be difficult to identify or measure and record later. Items required to be marked include but are not limited to:

    a. Dimensional changes to the Drawings.
    b. Revisions to details shown on the Drawings.
    c. Depths of various elements of foundation in relation to main floor level or survey datum.
    d. Horizontal and vertical location of underground utilities and appurtenances referenced to permanent surface improvements.
    e. Location of internal utilities and appurtenances concealed in construction referenced to visible and accessible features of structure.
    f. Establish locations of underground work, points of connection with existing utilities, changes in direction, valves, manholes, catch basins, capped stub outs, invert elevations, and similar items.
    g. Locations of underground work, points of connection with existing utilities, changes in direction, valves, manholes, catch basins, capped stub outs, invert elevations, and similar items.
    h. Actual numbering of each electrical circuit.
    i. Field changes of dimension and detail.
    j. Revisions to routing of piping and conduits.
    k. Revisions to electrical circuitry.
    l. Actual equipment locations.
    m. Duct size and routing.
    n. Changes made by Change Order, Construction Change Directive, or Field Instruction..
    o. Details not on original Contract Drawings.

2. Mark completely and accurately Project Record Drawing prints of Contract Drawings or Shop Drawings, whichever is the most capable of showing actual physical conditions. Where Shop Drawings are marked, show cross-reference on Contract Drawings location.

3. Mark Project Record Drawing sets with red erasable colored pencil; use other colors to distinguish between changes for different categories of the Work at the same location.

4. Mark important additional information that was either shown schematically or omitted from original Drawings.

5. Note Construction Change Directive numbers; Field Instruction numbers; alternate numbers, Change Order numbers, and similar identification.

6. Responsibility for Mark-up: Where feasible, the individual or entity who obtained Project Record Drawing data, whether the individual or entity is the installer, Subcontractor, or similar entity, is required to prepare the mark-up on Project Record Drawings.

    a. Accurately record information in an understandable and legible drawing technique.
    b. Record data as soon as possible after it has been obtained. In the case of concealed installations, record and check the mark-up prior to concealment.

B. Preparation of Record Drawings: Immediately prior to inspection for Certification of Substantial Completion, review completed marked-up Project Record Drawings with the Engineer; furnish a full set of corrected Shop Drawings to the Engineer; make corrections on the mark-up Project Record Drawings from hand-drawn drawings; and provide to the Engineer the Contractor's mark-up Project Record Drawings and all other information to start the process to prepare a full set of AutoCAD Project Record Drawings.

1. Incorporate changes and additional information previously marked on print sets. Erase, redraw, and add details and notations where applicable. Identify and date each Drawing; include the printed designation "PROJECT RECORD DRAWINGS" in a prominent location on each Drawing.

2. Refer instances of uncertainty to the Engineer for resolution.

3. Distribution: Whether or not changes and additional information were recorded, organize and bind original marked-up set of prints that were maintained during the construction period into manageable sets. Bind the set with durable paper cover sheets, with appropriate identification, including titles, dates, and other information on cover sheets.

C. Shop Drawings and Samples: Maintain as record documents; legibly annotate Shop Drawings and Samples to record changes made after review.

D. Distribution of Marked-Up Drawings: Submit the marked-up Project Record Drawings set to the Engineer for City's records.

1.3 PROJECT RECORD SPECIFICATIONS

Contractor shall perform the following:

A. During the construction period, maintain one copy of the Project Specifications, including addenda and modifications issued, for Project Record Document purposes.

B. Mark the Project Record Specifications to indicate the actual installation where the installation varies substantially from that indicated in Specifications and Modifications issued. Note related Project Record Drawing information, where applicable. Give particular attention to substitutions, selection of product options, Change Order, Construction Change Directive, and Field Instruction work, and information on concealed installation that would be difficult to identify or measure and record later. Provide to the Engineer the Contractor's mark-up Project Record Specifications and all other information to start the process to prepare a full set of Microsoft Word Project Record Specifications.

1. In each Specification Section where products, materials or units of equipment are specified or scheduled, mark the copy with the proprietary name and model number of the product furnished.

2. Record the name of the manufacturer, catalog number, supplier and installer, and other information necessary to provide a record of selections made and to document coordination with Project Record Product Data submittals and maintenance manuals.

3. Note related Project Record Product Data, where applicable, for each principal product specified, indicate whether Project Record Product Data has been submitted in maintenance manual instead of submitted as Project Record Product Data.

C. Upon completion of mark-up, submit Project Record Specifications to City for City's records.

1.4 ADDITIONAL REQUIREMENTS FOR FINAL PROJECT RECORD DOCUMENTS

A. Subsequent work is highly dependent on the accuracy of the as-built site conditions, including the actual rough grade elevations. Contractor shall take particular care to provide complete and accurate as-built information of the rough grade elevations on the mark-up Project Record Drawings for the City's use for subsequent work.

B. After Substantial Completion and before Final Completion, the Engineer will carefully transfer all data shown on the Contractor's mark-up Project Record Drawings to the corresponding computer files, coordinating the information as required.

C. Contractor shall clearly indicate at each affected detail and other drawings a full description of changes made during construction, and the actual location of items as previously specified.

D. Contractor shall "cloud" all affected areas.

E. Contractor shall stamp each Record Drawing with the following information:

1. Project Record Document.

2. Prepared by: Contractor's name, permanent address.

3. Date prepared.

4. Contractor's signature.

5. City Project number.

1.5 PROJECT RECORD PRODUCT DATA

Contractor shall perform the following:

A. During the construction period, maintain one copy of each Project Record Product Data submittal for Project Record Document purposes.

1. Mark Project Record Product Data to indicate the actual product installation where the installation varies substantially from that indicated in Project Record Product Data submitted. Include significant changes in the product delivered to the site, and changes in manufacturer's instructions and recommendations for installation.

2. Give particular attention to information on concealed products and installations that cannot be readily identified and recorded later.

3. Note related Change Orders and mark-up of Project Record Drawings, where applicable.

4. Where Project Record Product Data is required as part of maintenance manuals, submit marked-up Project Record Product Data as an insert in the manual, instead of submittal as Project Record Product Data.

5. The Contractor is responsible for mark-up and submittal of Project Record Product Data for the Work.

6. Upon completion of mark-up, submit a complete set of Project Record Product Data to the Engineer for City's records.

B. Material, Equipment, and Finish Data

1. Provide data for primary materials, equipment and finishes as required under each Specification Section.

2. Submit two sets prior to final inspection, bound in 8-1/2 inches by 11 inches three-ring binders with durable plastic covers; provide typewritten table of contents for each volume.

3. Arrange by Specification division and give names, addresses, and telephone numbers of Subcontractors and suppliers.

   List:

   a. Trade names.
   b. Model or type numbers.
   c. Assembly diagrams.
   d. Operating instructions.
   e. Cleaning instructions.
   f. Maintenance instructions.
   g. Recommended spare parts.
   h. Product data.

1.6 MISCELLANEOUS PROJECT RECORD SUBMITTALS

Contractor shall perform the following:

A. Refer to other Specification Sections for miscellaneous record keeping requirements and submittals in connection with various construction activities. Immediately prior to Substantial Completion, complete miscellaneous records and place in good order, properly identified and bound or filed, ready for use and reference. Submit to the Engineer for City's records.

B. Categories of requirements resulting in miscellaneous records include, but are not limited to, the following:

   1. Field records on excavations and foundations
   2. Field records on underground construction and similar work
   3. Survey showing locations and elevations of underground lines
   4. Invert elevations of drainage piping
   5. Surveys establishing building lines and levels
   6. Authorized measurements utilizing unit prices or allowances
   7. Records of plant treatment
   8. Ambient and substrate condition tests
   9. Certifications received in lieu of labels on bulk products
   10. Batch mixing and bulk delivery records
   11. Testing and qualification of tradespersons
   12. Documented qualification of installation firms
   13. Load and performance testing
   14. Inspections and certifications by governing authorities
   15. Leakage and water-penetration tests
   16. Fire resistance and flame spread test results
   17. Final inspection and correction procedures

1.7 RECORDING

Contractor shall post changes and modifications to the Contract Documents as they occur. Do not wait until the end of the Project. The Engineer may periodically review Project Record Documents to assure compliance with this requirement.

1.8 SUBMITTAL

Contractor shall perform the following:

A. At completion of Project, deliver Project Record Documents to the Engineer.

B. Accompany submittal with transmittal letter containing:

1. Date
2. Project title and number
3. Contractor's name and address
4. Number and title of each Project Record Document
5. Certification that each document as submitted is complete and accurate
6. Contractor's signature

END OF SECTION

THIS PAGE

WAS INTENTIONALLY

LEFT BLANK

SECTION 02005

TRENCH AND EXCAVATION SAFETY

1. GENERAL

1.1 DESCRIPTION

This work shall consist of furnishing all labor, equipment, materials and incidentals required to design, construct, maintain and remove all shoring, sheeting, bracing, lagging, cribbing, piling, or other types of support for the walls of open excavations and trenches required for the construction of the project in accordance with all applicable laws, including Section 6705 of the Labor Code of the State of California, concerning trench excavation safety plans.

2. SAFETY PLAN

2.1 TRENCH AND EXCAVATION SAFETY PLAN

Before beginning excavation for a trench five (5') feet or more in depth, or of any excavation that requires shoring, the Contractor shall submit to the Engineer for review of a detailed plan showing the design of shoring, bracing, sloping, or other provisions to be made for worker protection from the hazards of caving ground due to excavation. Such plan shall be submitted at least five (5) days before the Contractor intends to begin work on the excavation. If such plan varies from the shoring system standards established by the Construction Safety Orders of the State Division of Occupational Safety and Health, the plan shall be prepared by a California Registered Civil or Structural Engineer and shall be submitted along with calculations and other supporting documentation to the Engineer at least ten days prior to the start of trench excavation.

Nothing herein shall be deemed to allow the use of shoring, sloping, or protective systems less effective than that required by the Construction Safety Orders of the Division of Occupational Safety and Health.

2.2 PERMITS REQUIRED

A. Contractor shall obtain the necessary permits from the State of California Division of Occupational Safety and Health prior to performance of any work requiring such permits.

3. CONSTRUCTION

3.1 INSTALLATION

The Contractor shall furnish and install all sheet piling, shoring, bracing, lagging or other devices as a precaution against caving in or sloughing in of the sides of any excavation in conformance with the rules of the State Division of Occupational Safety and Health. The protection of adjacent structures and existing facilities from ground movement due to excavation and the elimination of the element of danger to life, property, or to existing improvements is the intent of these requirements. Additional supports requested by the

Engineer shall in no way relieve the Contractor of his responsibility for the sufficiency of its precautions.

Unless specifically allowed by the Engineer, sloping of a trench wall will not be approved for any trench made within or adjacent to a paved surface; shoring, bracing, or other means of positive support shall be required.

3.2 REMOVAL

All trench and excavation support materials shall, unless specifically allowed by the Engineer, be removed during backfilling. In addition, they shall be removed in such a manner as to prevent any movement of the ground or damage to the piping or other structures.

4. MEASUREMENT AND PAYMENT

All work involved in providing plans, for obtaining permits, for furnishing, installing and removing the Trench Excavation and Safety work in accordance with the requirements of this Section will be paid for at a lump sum price, unless otherwise specified in the Contract Documents.

When the Contract Documents do not include a contract pay item for Trench Excavation and Safety, full compensation for any necessary Trench Excavation and Safety required to perform the construction operations specified shall be considered as included in the price paid for the other bid items of work involved and no additional compensation will be allowed therefore.

Payment, whether by separate bid item or as included in other bid items, shall include full compensation for furnishing all labor, materials, tools, equipment, and incidentals, and for doing all the work involved in performing the Trench Excavation and Safety work as required by the Contract Documents and as directed by the Engineer.

END OF SECTION

SECTION 02007

STORM WATER POLLUTION PREVENTION

1. GENERAL

1.1 DESCRIPTION

Storm water pollution is a major source of water pollution. To help combat the problems of storm water pollution, federal, state, and city governments have developed a program for monitoring and permitting discharges to municipal storm drain systems, creeks, rivers, and the San Francisco Bay.

1.2 DEFINITIONS

ABAG – Association of Bay Area Governments

Adequate BMPs – Best Management Practices effective for minimizing erosion, controlling sediment onsite, containing materials and wastes, and preventing storm water pollution, such as those described in the latest revisions of the Regional Board's Erosion and Sediment Control Field Manual, the California Stormwater Quality Association's Stormwater Management Practices Handbook for Construction, the ABAG Manual of Standards for Erosion & Sediment Control Measures, or other appropriate references.

BASMAA – Bay Area Stormwater Management Agencies Association BMP – Best Management Practices.

CASQA – California Stormwater Quality Association.

Erosion Controls - Practices designed to prevent the process by which soil particles are removed from the land surface by wind, water, and/or gravity.

Illicit Discharge – Any non-storm water discharge to a storm drain or watercourse, except for conditionally exempted discharges allowed under the Program's NPDES permit.

NOI – Notice of Intent.

NOI Site – A construction site of a size or nature to require coverage under the State's Construction Activity General Permit.

NPDES – National Pollution Discharge Elimination System.

RWQCB-SFBR – Regional Water Quality Control Board – San Francisco Bay Region.

SCVURPPP - Santa Clara Valley Urban Runoff Pollution Prevention Program

Sediment Controls - Practices designed to remove sediments (soil particles, clays, sands, and other minerals) from stormwater before they are transported off-site or reach a storm drain inlet, creek, river, or other waterways.

Significant Erosion Potential – Conditions created by land disturbance activities that require a grading permit, as defined by local ordinance, or by discharges of storm water runoff over

areas with erodable soils.

Site Design Measures - Methods of laying out a proposed development so as to reduce impervious surface area, especially directly-connected impervious area, maximize permeability, maximize choices for mobility, use drainage as a design element, and protect sensitive natural areas.

Source Control Measures – Structural controls or operational practices designed to prevent or limit pollution generation where it is created so that pollutants do not contact stormwater. Structural or operational measures designed to infiltrate or detain runoff prior to its entering the storm drain system to reduce the volume and velocity of runoff as well as provide some natural treatment.

SWPPP – Storm Water Pollution Prevention Plan.

SWRCB – State of California Water Resources Control Board.

Treatment Controls - Landscape or structural controls designed to treat or reduce the amount of pollutants in stormwater or to reduce the amount or rate of stormwater. Treatment controls include detention basins, water quality wetlands, biofilters, vertical filters, solid separators, and manufactured inserts.

Wet Season – As defined by local ordinance (typically October 15 to April 15), or as determined by current conditions.

1.3 CONSTRUCTION GENERAL REQUIREMENTS

Construction activities can significantly alter natural drainage patterns and pollute storm water runoff. Runoff picks up pollutants as it flows over the ground or paved areas and carries these pollutants into the storm drain system. Common sources of illicit discharge from construction sites include: sediments from soil erosion; construction materials and waste (e.g., paint, solvents, concrete, drywall); landscaping runoff containing fertilizers and pesticides; and spilled oil, fuel, and other fluids from construction vehicles and heavy equipment.

The City has developed storm water management programs that include requirements for construction activities. Construction projects within the City will need to comply with these requirements. If a project construction activity disturbs one acre or more, the Responsible Party (Contractor) must file a Notice of Intent (NOI) to obtain coverage under the General Construction Activity Permit issued by the State Water Resources Control Board, and prepare a Storm water Pollution Prevention Plan (SWPPP). Projects, both private and municipal, with less than one acre disturbed are required to follow appropriate storm water pollution prevention measures.

The SWPPP must identify appropriate storm water pollution prevention measures or best management practices (BMPs), to reduce pollutants in storm water discharges from the construction site both during and after construction is completed. A best management practice or BMP is defined as any program, technology, process, practice, operating method, measure, or device that controls, prevents, removes, or reduces pollution. BMPs, for construction activities, shall be used for all size construction projects, adequate for the season and site conditions.

For more information on the General Permit, designing storm water quality controls, or

producing a Storm water Pollution Prevention Plan, please refer to the California Stormwater Quality Association's Stormwater Best Management Practice Handbook for Construction Activity, the RWQCB-SFBR's Erosion and Sediment Control Field Manual and its Guidelines for Construction Projects, or the Santa Clara Valley Urban Runoff Pollution Prevention Program.

The requirements in this Section incorporate those described in the latest revision of the brochure "Blueprint for a Clean Bay – Best Management Practices to Prevent Stormwater Pollution from Construction-Related Activities" prepared by the Bay Area Stormwater Management Agencies Association (BASMAA) and the Santa Clara Valley Urban Runoff Pollution Prevention Program, based on the RWQCB-SFBR Erosion and Sediment Control Manual, CASQA's California Storm Water Best Management Practice Handbook for Construction Activity, and the Association of Bay Area Governments (ABAG) Manual of Standards for Erosion & Sediment Control Measures.

1.4 POST-CONSTRUCTION GENERAL REQUIREMENTS

New and redevelopment projects can significantly alter natural drainage patterns and pollute storm water runoff by increasing the amount of impervious surface area and amounts and types of pollutants entering the runoff. Runoff picks up pollutants as it flows over the ground or paved areas and carries these pollutants into the storm drain system. Because impervious areas do not allow for infiltration of water, the amount and flow rate of runoff increases when development occurs, which may be detrimental to the receiving waters due to resulting erosion and stream scour.

The City has developed storm water management programs that include requirements for post-construction activities to ensure compliance with Provision C.3. of the SCVURPPP NPDES permit. The General Construction permit also contains requirements for permanent stormwater quality controls. The Responsible Party (Contractor) must comply with both the General Construction permit requirements and with Provision C.3. of the SCVURPPP NPDES permit. Public and private new development and redevelopment projects within the City will need to comply with these requirements.

All developments should consider the inclusion of site design and source control measures. Depending on the amount of impervious surface coverage the proposed project will have, the project may need to meet the additional treatment control requirements of the SCVURPPP NPDES permit. Furthermore, maintenance programs shall be set up to ensure proper maintenance and operation of the treatment controls over the life of the project. The City must also manage increases in peak runoff flow volume of certain project where such increased flow and/or volume can cause increased erosion of creek beds and banks, silt pollution generation, or other impacts to beneficial uses. Contact the City for more information on the definition and requirements related to Provision C.3.

For more information on Provision C.3 of the SCVURPPP NPDES Permit or designing storm water quality controls please refer to the latest revision of the Santa Clara Valley Urban Runoff Pollution Prevention Program C.3. Handbook, BASMAA's Start at the Source manual and the CASQA's BMP Handbooks New Development and Redevelopment.

2. GENERAL PRACTICES

2.1 GENERAL PRACTICES

In the following subsections are some general principles which are to be followed that can significantly reduce Illicit Discharge from construction activity and help make compliance with storm water regulations easier.

2.2 EMPLOYEE AND SUBCONTRACTOR TRAINING AND AWARENESS

The Contractor shall train all employees/subcontractors on the storm water pollution prevention requirements contained in this Section. The Contractor shall further inform subcontractors of the storm water pollution prevention contract requirements and include appropriate subcontract provisions to ensure that these requirements are met.

2.3 EMERGENCY RESPONSE PLAN

Contractor shall have an Emergency Response Plan, including 24-hour contact phone numbers, and file a copy with the City.

2.4 IDENTIFICATION AND PROTECTION OF STORM DRAINAGE FACILITIES

Identify all storm drains, drainage swales, creeks, and rivers located near the construction site and make sure all subcontractors are aware of their locations to prevent pollutants from entering them.

Protect all storm drain inlets using filter fabric cloth or other best management practices to prevent sediments from entering the storm drainage system during construction activities.

For any new storm drain inlets constructed as part of the project, City will provide and install “No Dumping Flows to Bay” plaques near each catch basin.

2.5 SITE AND MATERIAL PROTECTION

Avoid contaminating clean runoff from areas adjacent to construction site by using berms and/or temporary or permanent drainage ditches to divert water flow around the site. Reduce storm water runoff velocities by constructing temporary check dams and/or berms where appropriate.

Keep materials out of the rain – prevent runoff pollution at the source. Schedule clearing or heavy earth moving activities for periods of dry weather. Cover exposed piles of soil, construction materials and wastes with plastic sheeting or temporary roofs. Before it rains, sweep and remove materials from surfaces that drain to storm drains, creeks, rivers, or channels.

Store containers of paints, chemicals, solvents, and other hazardous materials in accordance with secondary containment regulations. It is recommended that these materials and wastes be covered, as needed, to avoid potential management of collected rainwater as a hazardous waste.

Do not over-apply pesticides or fertilizers and follow the manufacturers’ instructions for

mixing and applying materials.

Keep an adequate (depending on season) supply of erosion and sediment control materials on-site throughout the year.

Be sure that trailers carrying your materials are covered during transit. If not, the hauler may be cited and fined.

2.6 MATERIAL WASTE MANAGEMENT

Keep pollutants off exposed surfaces. Place trash cans around the site to reduce litter. Dispose of all non-hazardous construction wastes in covered dumpsters or recycling receptacles by the end of each working day. Dumpsters and recycling receptacles shall be emptied frequently enough to prevent overflowing. Only City approved solid waste hauling companies shall be used by Contractor. Contractor is responsible for keeping site clean every day.

Practice source reduction – reduce waste by ordering only the amount you need to finish the job.

Recycle leftover materials to the maximum extent practicable. Materials such as concrete, asphalt, scrap metal, solvents, degreasers, cleared vegetation, paper, rock, and vehicle maintenance materials such as used oil, antifreeze, batteries, and tires are recyclable. Any current City requirements for construction and demolition recycling shall be followed.

Dispose of all wastes properly. Materials that cannot be reused or recycled must be taken to an appropriate landfill or disposed of as hazardous waste. Never throw debris into channels, rivers, creeks, or into wetland areas. Never store or leave debris in the street or near a waterway where it may contact runoff.

Illegal dumping is a violation subject to a fine and/or time in jail. Be sure that trailers carrying materials to and from the site are covered during transit. If not, the hauler may be cited and fined.

2.7 SPILL PREVENTION AND CONTROL

Clean up leaks, drips, and other spills immediately so they do not contact storm water. A stockpile of spill cleanup materials, such as filter fabric, sand/gravel bags, rags and/or absorbents shall be readily accessible on- site. Ensure that all employees know where these materials are and how to use them. The Contractor shall immediately contain and prevent leaks and spills from entering storm drains, and properly clean up and dispose of the waste and cleanup materials. Any spill of material that has entered the storm drainage system shall be immediately reported by calling “911.”

Refuel vehicles and heavy equipment in one designated location on the site following Best Management Practices and take care to clean up spills immediately.

Wash vehicles at an appropriate off-site facility. If equipment must be washed on-site, do not use soaps, solvents, degreasers, or steam cleaning equipment, and prevent wash water from entering the storm drain. Direct wash water to a containment point where it can evaporate and/or infiltrate, if appropriate.

Never wash down pavement or surfaces where materials have spilled. Use dry cleanup methods whenever possible.

2.8 DUST CONTROL AND STREET SWEEPING

If recycled water is used on-site to control dust, it shall not be allowed to enter the storm drainage system.

Clean and sweep roadways and on-site paved areas, at least daily and as often as necessary to remove all materials attributed to the work. When cleaning sediments from streets, driveways and paved areas on construction sites, use dry sweeping methods where possible. If potable water must be used to flush pavement, collect runoff to settle out sediments and protect storm drain inlets. In no event shall the cleaning and sweeping be less than at the end of each working day. Storm Water Pollution Prevention personnel may order more frequent sweeping and cleaning.

3. EROSION PREVENTION AND SEDIMENT CONTROL

3.1 PREVENT EROSION AND CONTROL SEDIMENT

The RWQCB-SFBR Erosion and Sediment Control Field Manual, the CASQA California Storm Water Best Management Practices Handbook for Construction Activity and the Association of Bay Area Governments Manual of Standards for Erosion and Sediment Control provide specific details and design criteria for erosion and sediment control plans, which the Contractor shall use.

Protect storm drain inlets from sediment-laden runoff. Storm drain inlet protection devices include sand/gravel bag barriers, filter fabric fences, block and gravel filters, and excavated drop inlet sediment traps or a combination of these.

Delineate clearing limits, easements, setbacks, sensitive or critical areas, trees, drainage courses, and buffer zones to prevent excessive or unnecessary disturbances and exposure. Remove existing vegetation only when absolutely necessary. Use protective fencing and erosion control blankets (e.g., jute or straw matting, glass fiber or excelsior matting, mulch netting) where necessary.

Prevent construction vehicle tires from tracking soil onto adjacent streets by constructing a temporary stone pad with a filter fabric under liner near the site exit where dirt and mud can be removed.

Phase grading operations to reduce disturbed areas and time of exposure. Excavation and grading during wet weather should be avoided.

Collect and detain sediment-laden runoff and water-generated by de- watering in sediment traps (and excavated or bermed area or constructed device) to allow sediments to settle out prior to discharge.

Performance of erosion and sediment controls is dependent on proper installation, routine inspections and maintenance of the controls. Most of the BMP’s are temporary and if left alone can quickly fall into disrepair and/or become ineffective. Routine inspections and maintenance, particularly before and after a storm event, shall be part of any erosion and sediment control plan, regardless of the size of project/improvement.

4. SAW CUTTING PROCEDURES

4.1 GENERAL

When making saw-cuts in pavement, use as little water as possible. During saw cutting, cover catch basins using control measures, such as filter fabric, sand/gravel bags, and fine gravel dams, to keep slurry out of the storm drain system. When protecting a catch basin, the entire opening should be covered with filter fabric.

All liquid used to facilitate saw-cutting shall be vacuumed immediately and not allowed to dry in place. Disposal of collected liquids/solids shall be according to Best Management Practices.

5. ASPHALTIC MATERIAL CONSTRUCTION

5.1 GENERAL

Road paving, surfacing, and asphalt removal present numerous opportunities for storm water pollution from the asphalt mix, seal coats, or excavated material to enter the storm drain.

5.2 ASPHALTIC MATERIALS PRACTICES AND WASTE MANAGEMENT

Apply concrete asphalt, and seal coat during dry weather to prevent contaminants from contacting storm water runoff.

Cover storm drain inlets and manholes when paving or applying seal coat, slurry seal, fog seal, etc.

Always park paving machines over drip pans or absorbent materials.

Excess sand (placed as part of a sand seal or to absorb excess oil) shall not be swept or washed into gutters, storm drains, or creeks. Instead, the Contractor shall either collect the sand and return it to the stockpile, or dispose of it appropriately.

The Contractor shall not use water to wash down asphalt or concrete pavement.

Marking paint shall be removed from paving using dry methods such as a wire brush and vacuum. If water is used, all wastewater shall be vacuumed and disposed of according to Best Management Practices.

6. CONCRETE, GROUT, AND MOTOR MANAGEMENT

6.1 CONCRETE MATERIALS STORAGE AND MIXING

Store dry and wet materials under cover, protected from rainfall and runoff.

Avoid mixing excess amounts of fresh concrete or cement mortar on-site.

6.2 CONCRETE TRUCK/EQUIPMENT WASH OUT

Never wash out concrete trucks or equipment into streets, gutters, storm drains, or creeks.

Wash out concrete transit mixers only in designated washout areas where the water will flow into settling ponds or onto dirt or stockpiles of aggregate base or sand. Pump water from settling ponds and remove off- site. Whenever possible, recycle washout by pumping back into mixers for reuse. Dispose of hardened concrete in recycling and disposal dumpsters.

6.3 EXPOSED AGGREGATE CONCRETE WASH WATER

Wash down exposed aggregate concrete only when the wash water can: (1) flow onto a dirt area; or (2) drain onto a bermed surface from which it can be vacuumed from a catchment created and be properly disposed. If necessary, divert runoff with temporary berms. Make sure runoff does not reach gutters or storm drains.

Never wash sweepings from exposed aggregate concrete into a street or storm drain. Collect and return to aggregate base stockpile, or dispose with trash.

7. PAINT MATERIALS AND WASTE MANAGEMENT

7.1 PAINTING MATERIALS AND WASTE MANAGEMENT

Paint, solvents, chemicals, and waste materials shall be stored in compliance with all applicable local, State and Federal regulations. The storage of these materials will be in a designated area that will not allow run-on of storm water or runoff of spills.

Disposal of excess thinners, solvents, oil-based paint shall be as hazardous waste. When they are thoroughly dry, empty paint cans, used brushes, rags, absorbent materials, and drop cloths are no longer hazardous and may be disposed of as garbage.

7.2 PAINTING CLEANUP

Never clean brushes or rinse paint containers into a street, gutter, storm drain, or creek.

For water-based paints, paint out brushes to the extent possible and rinse to a drain leading to the sanitary sewer (i.e. indoor plumbing).

For oil-based paints, paint out brushes to the extent possible, and filter and reuse thinners and solvents. Dispose of unusable thinners and residue as hazardous waste.

Recycle, return to supplier or donate unwanted water-based (latex) paint. You may be able to recycle clean empty dry paint cans as metal.

Dried latex paint may be disposed of in the garbage.

Unwanted paint (that is not recycled), thinners, and sludge must be disposed of as hazardous waste.

8. POST-CONSTRUCTION CONTROL

8.1 General Practices

The Responsible Party shall meet the requirements for permanent controls as described in the General Construction Activity permit, as applicable; and the requirements indicated in Provision C.3. of the SCVURPPP NPDES permit.

8.2 Site Design and Source Controls

The Responsible Party will consider inclusion of site design and source controls for all projects. Responsible Parties are directed to the City's "Guidance on Stormwater BMP Selection" for a list of preferred measures. The CASQA California Storm Water Best Management Practices Handbook for New and Redevelopment and the Bay Area Stormwater Management Agencies Association's Start at the Source provide specific details and design criteria for post-construction controls, including source controls, and site design measures, which the Responsible Party may use to comply with Provision C.3 of the SCVURPPP NPDES permit. Responsible Parties are also directed to the City's "Guidance on Stormwater BMP Selection" for a list of preferred measures.

8.3 Treatment Controls

The CASQA California Storm Water Best Management Practices Handbook for New and Redevelopment and the Bay Area Stormwater Management Agencies Association's Start at the Source provide specific details and design criteria for post-construction controls, including treatment controls, which the Responsible Party shall use to comply with Provision C.3 of the SCVURPPP NPDES permit and the permanent control requirements of the General Construction Activity permit.

8.4 Maintenance Program for Post-Construction Controls

Performance of treatment and source controls is dependent on proper installation, routine inspections and maintenance of the controls. Most permanent BMPs, if left alone, can quickly fall into disrepair and/or become ineffective. Routine inspections and maintenance shall be part of the BMP, regardless of the size of project/improvement. The maintenance and inspection program for post-construction controls shall meet the requirements of Provision C.3 of the SCVURPPP NPDES permit.

9. ENFORCEMENT POLICIES

Failure to follow storm water pollution prevention regulations and requirements, and to provide adequate BMP's will result in enforcement actions by appropriate agencies. Enforcement actions that could result include issuance of Notice of Violation of City Codes, Administrative Citations with fines, billing of costs for cleanup, issuance of stop work order for the subject project, referral to the appropriate State and Federal enforcement agencies, and filing criminal complaints. Contractor is reminded that they are responsible for their sub- contractors' actions.

10. MEASUREMENT AND PAYMENT

A. All work involved in providing plans, obtaining permits and otherwise complying with Storm Water Pollution Requirements in accordance with the requirements of this Section will not be paid for as a separate item but is considered paid for under the various items of work provided in the Contract Documents and no additional compensation will be allowed therefore.

B. Payment included in other bid items, shall include full compensation for furnishing all labor, materials, tools, equipment, and incidentals, and for doing all the work involved in performing Storm Water Pollution Requirements as required by the Contract Documents and as directed by the Engineer.

END OF SECTION

SECTION 02010

SITE CONDITIONS AND DUST CONTROL

1. GENERAL

1.1 DESCRIPTION

The work shall consist of keeping the site clean and free from rubbish and debris during all phases of construction, including when work is suspended and until final acceptance. The contractor shall also abate dust nuisance by cleaning, sweeping and sprinkling with water or other means as necessary. All work shall comply with the requirements of Section 02007, Storm Water Pollution Prevention.

2. MATERIALS

2.1 WATER

Water for dust control and general cleaning shall be from the City's potable water system, the recycled water system, or another approved source. Prior to use of the City's potable water from a hydrant or recycled water, the contractor must obtain a water meter from the City Water and Sewer Utility and arrange payment for water used.

3. CONSTRUCTION

3.1 SITE CONDITIONS

Materials and equipment that are delivered to the jobsite shall be stored in a neat and safe manner to minimize impacts to pedestrian and vehicle traffic and private property, to the satisfaction of the Engineer. Driveways, sidewalks, all traffic lanes, pedestrian and bicycle access, and wheelchair ramps shall be kept open at all times unless specific, written permission is granted by the Engineer to close them. When required by the Engineer, alternative facilities or detours shall be installed prior to closure. Materials and equipment shall be removed from the jobsite as soon as they are no longer needed. Care shall be taken to prevent spillage on the jobsite and haul routes. Any such spillage shall be immediately removed and the area cleaned-up.

Materials and equipment shall be stored in such a manner as to not prevent the normal drainage flows, unless an approved alternative is provided. Runoff from construction activities including but not limited to saw cutting, washing of areas, sweeping, dust control, compaction activities, etc. shall be done so that no dirt, silt and other non-acceptable materials are discharged into flood control channels in accordance with Section 02007, Storm Water Pollution Prevention.

Upon completion, and before the Work can be considered acceptable, the Contractor shall clean all areas occupied by him in connection with the work, and remove all debris, excess materials and waste materials. Contractor's temporary structures and equipment shall be removed from the jobsite unless otherwise required by the Contract Documents. The entire project shall be left in a neat, clean, and presentable condition, acceptable to the Engineer.

The Contractor shall immediately remove spillage or tracking resulting from hauling operations along or across any private or public traveled way.

Fences, mail boxes, signs, backfill behind curbs and sidewalks, replacement of landscaping and irrigation systems, and other pre-existing facilities to remain which were damaged, destroyed or moved during construction, shall be restored or replace to equal or better condition than that which existed at the start of the work. “Equal or better” shall be determined by the Engineer. Effected building surfaces, including window glass, shall be left in a clean condition.

3.2 DUST CONTROL

The Contractor shall control dust, resulting from the Contractor’s performance of the work either inside or outside the right-of-way. It shall be the Contractor’s responsibility to insure that dirt, dust or mud originating from any of the Contractor’s operations either inside or outside of the work area is controlled in such a manner that it does not create a nuisance to private property or the public. The Engineer shall be the final authority on determining if dust is a nuisance.

3.3 PERFORMANCE

The Contractor shall be responsible for dust control. If the Engineer determines that the Contractor’s work is creating a nuisance he may specifically order dust control measures be implemented. When ordered by the Engineer, the Contractor shall clean up and/or provide dust control for the work site as soon as possible but in no case shall it take more than one (1) day. If the lack of cleanup is causing safety problems, the 1-day provision is void and the problem shall be resolved immediately. If the Contractor fails to clean up and/or provide dust control for the work site within one (1) day after receiving notice, or immediately as in the case of safety concerns, the City, at its own option, may clean up the site and charge the Contractor the full cost of the cleanup. The cost shall be paid for by the Contractor separately or may be deducted from the progress/final payments to the Contractor as the City incurs such costs.

4. PAYMENT

All work involved in providing Cleanup and Dust Control work in accordance with the requirements of this Section will not be paid for as a separate item but is considered paid for under the various items of work provided in the Contract Documents and no additional compensation will be allowed therefore.

Payment included in other bid items, shall include full compensation for furnishing all labor, materials, tools, equipment, and incidentals, and for doing all the work involved in performing Cleanup and Dust Control as required by the Contract Documents and as directed by the Engineer.

END OF SECTION

SECTION 02016

CLEARING AND GRUBBING

1. GENERAL

1.1 DESCRIPTION

This work shall conform to Section 16 of the Standard Specifications, where applicable, and shall consist of removing all objectionable material from within the area of the work including, but not limited to, the street right-of-way, bridge construction areas, road approaches, material sites within the right-of-way, areas through which ditches and channels are to be excavated and such other areas as may be indicated in the Contract Documents. Section 16-1.03D, Disposal of Materials, of the Standard Specifications shall not apply. All materials removed under this Section 02016 shall become the property of the Contractor and shall be disposed of offsite by the Contractor. Should the Contractor produce evidence, acceptable to the Engineer, that any part of the material is suitable, the suitable material may be disposed of on the Work Site in a method and location acceptable to the Engineer. Refer to Subsection 1.6, Protection of Public and Private Property, and Subsection 1.16, Traffic Control, of Section 01500, Temporary Facilities and Controls, and Section 02007, Storm Water Pollution Prevention.

2.0 MEASUREMENT AND PAYMENT

Clearing and Grubbing shall be paid for at a lump sum price unless otherwise provided for in the Contract Documents.

When the Contract Documents do not include a contract pay item for clearing and grubbing, full compensation for any necessary clearing and grubbing to be performed shall be considered as included in the prices paid for the various items of work involved and no additional compensation shall be allowed therefore.

END OF SECTION

THIS PAGE
WAS INTENTIONALLY
LEFT BLANK

SECTION 02019

EARTHWORK

1.0 GENERAL

1.1 DESCRIPTION

Earthwork shall comply with Section 19 of the Standard Specifications except as provide for in this Section 02019 or elsewhere in the Contract Documents. Specifically excluded from this Section is trench excavation that is covered in Section 02062, Furnishing and Installing Pipe. Refer to Subsection 1.6, Protection of Public and Private Property, and Subsection 1.16, Traffic Control, of Section 01500, Temporary Facilities and Controls, and Section 02007, Storm Water Pollution Prevention.

2.0 GRADING

2.1 GRADE

The grading plane shall be as indicated in the Contract Documents. The subgrade, immediately prior to placing subsequent material thereon, shall be free of loose, deleterious and/or segregated material and shall be smooth and true to the required grade and cross sections.

2.2 GRADE TOLERANCE

The subgrade surface immediately prior to placing subsequent layers shall not vary more than 0.04 feet from the design elevation.

3.0 EXCAVATION

3.1 DESCRIPTION

Excavation shall comply with Section 19-2 of the Standard Specification as far as it is applicable. Pipeline excavation is provided for in Section 02062, Furnishing and Installing Pipe. Blasting will not be allowed unless specifically provided for in the Contract Documents.

3.2 MEASUREMENT AND PAYMENT

Unless otherwise specified in the Contract Documents, Earthwork will be paid by the square foot and the limit of measurement shall be from right-of-way line to right-of-way line or to the limits shown on the Contract Documents.

The price per square foot shall include excavating, sloping, rounding tops and ends of excavation and/or embankment, loading, hauling, overhaul, depositing, spreading and compacting the material complete in place; preparing subgrade; importing, placing, and compacting approved material where unsuitable material has been removed; filling and compacting holes, pits, and other depressions; importing approved suitable material, if required, when backfilling excavations resulting from the removal of structures and other facilities; placing selected material where required; furnishing and applying water; and grading and filling to conform the work to adjacent property.

The above price and payment shall include full compensation for furnishing all labor, materials, tools, equipment, and incidentals, and for doing all the work involved, complete in place, as shown in the Contract Documents, and as directed by the Engineer.

When the Contract Documents do not include a contract pay item for Earthwork as above specified, full compensation for any necessary Earthwork required to perform the construction operations specified shall be considered as included in the prices paid for the other items of work involved and no additional compensation will be allowed.

4.0 EMBANKMENT CONSTRUCTION

4.1 DESCRIPTION

Embankment construction shall consist of constructing embankments or other areas of fill including preparation of the areas upon which embankment materials are to be placed. Material selection, compaction and slope preparation shall be as indicated in the Contract Documents.

4.2 CONSTRUCTION

Embankments shall be constructed in layers. The loose thickness of each layer of embankment material before compaction shall not exceed eight inches (8”).

At the time of compaction, the moisture content of embankment material shall be such that the specified relative compaction will be obtained and the embankment will be in a firm and stable condition. Embankment material, which contains excessive moisture, shall not be compacted until the material is dry enough to obtain the required compaction. Embankment material shall not have a moisture content greater than 2% above optimum. Work necessary to dry overly wet material shall be considered incidental and is included in the prices paid for other items of work involved and no additional compensation will be allowed.

All areas to receive embankment construction shall have the existing surface excavated to a minimum depth of six inches (6”) to remove all vegetable matter and/or other unsatisfactory material. Refer to Section 02016, Clearing and Grubbing.

Embankment material shall be of a quality suitable for the purpose intended, free of vegetable matter or other unsatisfactory material. Clods or hard lumps of earth over six inches (6”) in greatest dimension shall be broken up before compacting the material in embankment. Rocks over six inches (6”) in greatest dimension shall be removed from embankment material.

When embankment is to be made and compacted against existing embankments, or where embankment is built 1/2 width at a time, the slope of old or new embankments shall be cut into a minimum of 6 feet horizontally as the work is brought up in layers.

The flat surfaces of all fill, placed under this Section 02019, shall not vary more than half an inch (1/2”) from the design elevations.

4.3 SLOPES

Excavation and embankment slopes shall be finished in conformance with the lines and grades shown in the Contract Documents or as established by the Engineer. All debris and loose material shall be removed. When completed, the average plane of the slopes shall conform to the slopes indicated in the Contract Documents and no point on the completed slopes shall vary from the designated grade by more than two and a half inches (2.5”).

The tops of excavation slopes and the ends of excavations shall be rounded as shown in the Contract Documents or as directed by the Engineer.

4.4 UNSUITABLE MATERIAL

Material below the original ground surface in Earthwork areas that is judged unsuitable for the planned use by the Engineer, shall be excavated and disposed of as directed by the Engineer. Material that is overly wet but otherwise suitable shall not be considered unsuitable for the planned use (see subsection 4.2 above).

When unsuitable material is removed and disposed of, the resulting space shall be filled with material suitable for the planned use as determined by the Engineer. Such suitable material shall be placed and compacted in layers as noted in this Section 02019.

Payment for removal and replacement of unsuitable material shall be paid at the rates approved by the City.

4.5 HAZARDOUS MATERIAL

Pursuant to Section 7104 of the Public Contract Code, the Contractor shall immediately give written notification to the City if any of the following conditions are encountered on the project site.

A. Material that the Contractor believes may be hazardous waste. Hazardous waste is defined as any material that is required to be removed to a Class I, Class II, or Class III disposal site by Section 25117 of the State Health and Safety Code.

B. Subsurface or latent physical conditions differing substantially from those indicated on the plans, specifications and/or any available soil reports, or differing substantially from conditions apparent from field operations.

C. Unknown physical conditions of any unusual nature, differing materially from those ordinarily encountered and generally recognized as inherent in work required by the Contract.

The Contractor shall cease all work in the vicinity of the conditions encountered as described above, such that the existing conditions are not disturbed. The Contractor shall protect such site from public access or exposure.

Upon receipt of the above-described written notification, the City shall promptly investigate the field conditions. If the City determines that, due to the nature of the conditions identified in the written notification, the scope of the project has changed, the Contractor shall be directed as to any additional project requirements.

A corresponding change, either an increase or decrease, shall be made in the amount of payment due to the Contractor in accordance with these specifications. If additional work is required of the Contractor, and the additional work is deemed to be a controlling item of work for the project, the City Engineer shall have authority to grant an appropriate number of additional working days to the project.

If the City determines that the condition of the material encountered does not differ from the expected conditions, and is not hazardous waste, as described above, the Contractor shall proceed with the project work as provide by the contract.

4.6 MEASUREMENTS AND PAYMENT

Measurement and payment for constructing embankments shall be as provided in Section 19-6.03 of the Standard Specifications, however, grade tolerance shall be as provided in this Section 02019 and measurement shall be by the cubic yard compacted in place.

5.0 COMPACTION

5.1 GENERAL

Earthwork compaction for the work consists of obtaining the required compaction in all earthwork described in the Contract Documents.

5.2 RELATIVE COMPACTION

The loose thickness of each layer of material before compaction shall not exceed eight inches (8") unless otherwise noted in the Contract Documents. The relative compaction of each layer shall not be less than 95%.

A. SUBGRADE TRUCK LOAD TEST

The subgrade shall be subjected to a "Truck Load Test" unless waived by the Engineer. The Contractor shall be required to furnish a loaded truck for the purpose of testing the load bearing capacity of the finished subgrade. Total gross load per rear axle shall be 16,000 pounds. Tire pressure must be over 65 psi. If the tested surface shows a visible deflection extending more than 6 inches from the wheel track at the time of loading, or a visible crack remains after loading, the Contractor shall take measures to correct the defective subgrade as approved by the Engineer.

In no case shall the relative compaction of the subgrade be less than required in this Section 02019.

5.3 MEASUREMENTS AND PAYMENT

Full compensation for complying with this section 5.0 shall be considered as included in the prices paid for the work and therefore no additional compensation shall be allowed.

6.0 STRUCTURE EXCAVATION AND BACKFILL, IMPORTED BORROW, AND TRENCH BACKFILL

6.1 DESCRIPTION

Structure excavation and backfill shall comply with Section 19-3 of the Standard Specifications as far as they are applicable and as provided in the Contract Documents. Trench backfill shall be for the backfill of pipe trenches as required in Section 02062, Furnishing and Installing Pipe, and shall be imported material. Sand and pea gravel backfill will not be allowed unless specifically required in the Contract Documents. Consolidating of structure backfill or pipe trench backfill by jetting or ponding is not allowed unless specifically provided for in the Contract Documents.

6.2 TRENCH BACKFILL MATERIAL AND IMPORTED BORROW

Trench backfill material shall consist of Class 2 (3/4-inch maximum size material) aggregate base conforming to Section 26 of the Standard Specifications.

Imported borrow shall consist of a durable granular material, well graded from coarse to fine. The combined mineral aggregate shall conform to the following gradation when determined by Test Method No. Calif. 202:

Sieve Size	Percent of Passing
1.5"	100
No. 4	40 - 70
No. 200	0 - 30

Imported borrow shall conform to the following quality requirements:

Test	Test Method	Requirements
Resistance (R-value) at 300 psi exudation	301	30 (minimum)
Sand Equivalent	217	20 (minimum)

The Engineer, prior to use, shall approve all imported trench backfill material and imported borrow.

6.3 SAND BACKFILL MATERIAL

Sand backfill will not be allowed for structure backfill or pipe trench backfill unless provided for in the Contract Documents or required by the Engineer. When sand backfill is to be used, it shall be clean and free from clay and organics. It shall be a clean, hard, durable material resulting from natural disintegration and abrasion of granite, quartz, or similar hard rock or by the processing of completely friable sandstone. It shall have a sand equivalent value of not less than 35. The percentage composition by weight as determined by laboratory sieves shall conform to the following grading limits:

Sieve Size	Percent Passing
No. 4	100
No. 10	95 - 100
No. 40	20 - 65
No. 100	5 - 30
No. 200	0 - 5

6.4 COMPACTION-IMPORTED BORROW AND TRENCH BACKFILL

Compaction of trench backfill shall be in accordance with Section 02062, Furnishing and Installing Pipe.

Imported borrow shall be compacted to 95% relative compaction unless otherwise noted in the Contract Documents.

6.5 COMPACTION-SAND BACKFILL

Structural sand backfill shall be placed in loose horizontal, uniform layers not to exceed 1 foot in thickness unless otherwise specified. Method of compaction shall be by vibratory compactors, unless otherwise specified in the Contract Documents. Each layer of sand backfill shall be compacted to a relative compaction of not less than 95 percent of maximum, as determined by Test Method No. ASTM 2922.

Compaction equipment and methods that produce horizontal or vertical earth pressures, which may cause excessive displacement or may damage structures, will not be allowed.

6.6 STRUCTURAL SAND BACKFILL

Structural sand backfill will be measured and paid by the cubic yard in place. Unless otherwise shown in the Contract Documents. The limits for computing pay quantities for structural sand backfill shall be as follows:

A. Horizontal limits will be vertical planes 1 foot outside of the neat lines of footings or structures without footings.

B. The upper limit shall be the finished grading plane.

C. The lower limit shall be a plane at the bottom of completed footings of structures.

Full compensation for all incidentals arising from this work shall be considered as included in the price paid per unit of measure and no further compensation shall be allowed.

6.7 SAND TRENCH BACKFILL

Payment for sand trench backfill is included in the unit price of the pipe as provided in Section 02062, Furnishing and Installing Pipe.

Where separate payment is provided for sand trench backfill, measurement shall be by the cubic yard, in place, and is computed by using the outside diameter of pipe plus 12 inches as the trench width. The depth of the trench shall be the distance from the subgrade of the covering structural material, or ground surface, whichever is applicable, to the outside bottom of the pipe less the volume occupied by the pipe. The length shall be the length of pipe actually placed. The volume of sand trench backfill thus calculated in cubic yards shall be the volume used for payment purposes.

Full compensation for all incidentals arising from this work shall be considered as included in the price paid per unit of measure and no further compensation shall be allowed.

6.8 MEASUREMENTS AND PAYMENT

All work involved in performing Structural Excavation and Backfill will be measured and paid for by the cubic yard of material, essentially as provided in Sections 19-3.07 and 19-3.08 of the Standard Specifications. Payment for Pipe Trench Backfill is as provided in this Section 02019, Earthwork, and Section 02062, Furnishing and Installing Pipe.

Measurement for imported borrow, not used in pipe trenches, shall be by cubic yard of material in place. Payment shall be at the bid price per unit of measure and shall include all costs and incidentals involved.

7.0 SURPLUS MATERIAL

7.1 DESCRIPTION

Surplus material from excavation shall become the property of the Contractor and be disposed of outside the limits of the Work unless otherwise shown in the Contract Documents or as directed by the Engineer.

Surplus material from pipe trench excavation shall become the property of the Contractor to be disposed of off the site unless the Contract Documents provide otherwise or as directed by the Engineer.

If the quantity of surplus material is provided in the Contract Documents, the quantity shown or specified is approximate only.

The Contractor shall satisfy itself that there is sufficient material available for the completion of the Work before disposing of any material. Any shortage of material caused by premature disposal of material by the Contractor, shall be replaced by the Contractor and no compensation will be allowed for such replacement.

7.2 MEASUREMENT AND PAYMENT

Payment for handling and/or disposing of surplus material shall be as provided in the Contract Documents. If not addressed in the Contract Documents, disposal of surplus material shall be considered as incidental and included in the various bid items. Payment for disposing of surplus material from pipe trench excavation shall be included in the price paid per lineal feet of pipe in place as provided in Section 02062, Furnishing and Installing Pipe.

8.0 TESTING

8.1 TEST METHODS

In connection with earthwork, tests shall be made in conformance with the following:

TESTS	TEST METHOD
Relative Compaction	ASTM 2922
Maximum Density (Curve)	ASTM 1557
In-place Moisture Content	ASTM 2216
Sand Equivalent	California 217
Resistance Value (R-Value)	California 301
Sieve Analysis	California 202

END OF SECTION

THIS PAGE
WAS INTENTIONALLY
LEFT BLANK

SECTION 02020

LANDSCAPING AND IRRIGATION

1. GENERAL

1.1 DESCRIPTION

Landscaping shall include but is not limited to: all work involved with demolition, clearing and grading of the areas to be landscaped or otherwise affected by work covered under this Section, installation of drainage systems, installation of irrigation systems for potable and/or reclaimed water, providing electrical, preparation of soil and installing plants, performing work for plant establishment, and post-installation maintenance and any other work shown and noted in the Contract Documents. Landscaping shall be in accordance with Section 20 of the Standard Specifications except as modified herein. Refer to Subsection 1.6, Protection of Public and Private Property, and Subsection 1.16, Traffic Control, of Section 01500, Temporary Facilities and Controls, and Section 02007, Storm Water Pollution Prevention.

2. CLEARING AND GRUBBING

2.1 DESCRIPTION

Contractor shall provide all labor, materials, tools, equipment, and incidentals for clearing and grubbing operations. Clearing and Grubbing for Landscaping shall be coordinated with Section 02016, Clearing and Grubbing, where applicable. This work shall be performed in advance of landscape grading operations in accordance with the requirements of the Contract Documents.

Clearing and grubbing of any area to receive planting shall consist of removing natural and artificial objectionable materials from the top twelve inches (12”) below finish grade of the entire area covered under this Section, unless otherwise indicated in the Contract Documents, and shall include but not be limited to rubbish, debris, such as concrete, masonry, and abandoned utilities, vegetative growth, such as trees, stumps, individual roots one inch (1”) in diameter or larger, roots occupying more than 1% of a given volume of soil, buried logs, brush, grass, weeds, or other items indicated in the Contract Documents.

All areas to receive sod, hydro-seeding, or groundcover shall have the top twelve inches (12”) below finish grade removed and replaced with Topsoil. See Subsection 6.0, Planting.

Clearing and grubbing of any area to receive hardscape (paving, walloways, or similar) shall be cleared and grubbed per Section 02016, Clearing and Grubbing.

2.2 PRESERVATION OF PROPERTY

Existing improvements, plant materials, improvements on the construction site or on adjacent property, utilities, and other facilities indicated in the Contract Documents and noted “to be protected” or “to remain” shall be protected from injury or damage resulting from Contractor’s operations in accordance with Subsection 1.6, Protection of Public and

Private Property, of Section 01500, Temporary Facilities and Controls.

2.3 REMOVAL AND DISPOSAL

Material collected during clearing and grubbing, existing culverts, drains, pipes, curbs, gutters, sidewalks, pavement, conduits and other facilities to be removed shall be at the expense of the Contractor, unless otherwise indicated in the Contract Documents. Materials removed shall not be incorporated into the project by the Contractor except as indicated in the Contract Documents or with the permission of the Engineer.

All materials removed shall be the property of the Contractor. Burning shall not be permitted. No accumulation of flammable material shall remain on or adjacent to the project site. The site and adjacent areas shall be left with a neat, safe, and finished appearance.

Trenches, holes, and depressions caused by the removal of facilities or objectionable materials shall be backfilled with materials equal to or better than the surrounding soil to the satisfaction of the Engineer. Backfill areas shall be compacted to the same density as existing conditions. Backfill shall be considered incidental and no additional compensation shall be allowed.

2.4 CONCRETE REMOVAL

Concrete indicated on the Contract Documents and specified herein for removal shall be cut to a true line with neatly sawed edges cut a minimum of four inches (4”) deep or the thickness of the concrete. If a sawcut is within three feet (3’) of an existing expansion or control joint, or score mark, concrete shall be removed to that score mark, joint, or edge. The Contractor shall insure that the final edge of the existing concrete is smooth, vertical, and free of divots, gouges, etc. Refer to Section 02007, Storm Water Pollution Prevention.

2.5 ASPHALTIC CONCRETE REMOVAL

Asphaltic concrete indicated on the Contract Documents and specified herein for removal shall be removed to clean, straight lines. Edges shall be sawcut through the full depth of pavement or to a depth of five inches (5”). Edges of pavement shall be trimmed to neat and straight lines before any adjacent work is performed.

3. DRAINAGE SYSTEM

3.1 DESCRIPTION

Contractor shall provide all labor, materials, tools, equipment, and incidentals to furnish and install drainage systems as indicated on the Contract Documents and in accordance with Section 02062, Furnishing and Installing Pipe, and Section 02070, Storm and Sanitary Sewer Manholes, Drainage Structures, and Miscellaneous Structures, unless otherwise modified herein.

Contractor shall maintain project site throughout the progress of the work in a reasonable, dry, workable condition, free of surface water.

3.2 NOTIFICATIONS

Before laying new pipe, expose the existing pipe at the proposed point of connection.

The Engineer shall be notified a minimum of two (2) full Working Days prior to connection for inspection of existing conditions and to control shut downs and make any adjustments necessary to accomplish the intent of the Contract Documents.

3.3 MATERIAL

A. Plastic Pipe:

All pipe shall be rigid unplasticized polyvinyl chloride (PVC) pipe having plain ends in all sizes. All PVC drain pipe shall conform to Section 02062 unless a thicker, stronger material is specifically noted in the Contract Documents.

B. Drain Boxes/Catch Basins:

Except in the street, where City Standard catch basins are required or where specific details are provided, drain boxes shall be precast concrete with extenders as needed. Boxes shall be from the manufacturer indicated in the Contract Documents or an approved equal, and installed as detailed in the Contract Documents. Unless precise locations are indicated on the Drawings, locations are approximate, and shall be as directed by the Engineer.

Drain box covers shall be galvanized steel unless otherwise indicated in the Contract Documents. Casting shall be true to pattern in form and dimension, free from defects. Covers shall bolt to concrete boxes in accordance with the manufacturer's recommendations.

C. Drain Rock And Filter Fabric:

Drain rock shall conform to Class 1, Type A Permeable Material as specified in Section 68-1.025 of the Standard Specifications.

Filter fabric shall conform to Section 88-1.03 of the Standard Specifications.

3.4 PIPE INSTALLATION

Installation of pipe shall be done in accordance with the requirements of Section 02062, Furnishing and Installing Pipe, as far as they are applicable.

4. IRRIGATION SYSTEM - POTABLE WATER

4.1 DESCRIPTION

The work of furnishing and installing a manual and/or automatic irrigation system for potable water, complete in place, shall be as specified herein, as indicated in the Contract Documents and as specified in Section 20 of the Standard Specifications, as far as they are applicable. When provided for in the Contract Documents, the work shall include, but not be limited to, irrigation systems and related appurtenances, connection to water and electrical utilities, excavation and backfill of pipe trenches, record drawings, operation and maintenance manuals, guarantees, permits, licenses, testing, inspections, and clean-up operations.

The Contractor shall coordinate the installation of all irrigation materials with the

construction of improvements, site amenities and planting, as indicated on the Contract Documents.

Drawings are diagrammatic and shall be adjusted as necessary to conform to actual field conditions. Costs incurred due to any adjustments for coverage, including those requested by the Engineer, relative to the location of irrigation heads as shown on the Contract Documents, shall be the responsibility of the Contractor. Unless otherwise specified, Contractor shall ensure one hundred percent (100%) coverage, with fifty percent (50%) overlap, without overspraying onto non-landscaped areas or hardscape.

Point of connection shall be as indicated on the Contract Documents. Contractor shall verify the location and size of water source and electrical supply prior to commencing installation. If field conditions differ from the Contract Documents, Contractor shall notify the Engineer immediately. Contractor shall contact the City Water and Sewer Department for the applicable average pressure in the specific area of the work.

Due to the scale of the Contract Documents, it is not possible to indicate all offsets, fittings, sleeves, and the like which may be required. Such items are incidental and shall be included in the various items of work. Contractor shall carefully investigate all conditions affecting the work and install a complete irrigation system in compliance with the Contract Documents.

4.2 QUALITY ASSURANCE

All local and state laws, rules and regulation governing or relating to any portion of the irrigation system are hereby incorporated into and made a part of the Contract Documents. Nothing contained in the Contract Documents shall be construed to conflict with any of the aforementioned rules, regulations or requirements. However, when the Contract Documents call for or describe materials, workmanship or construction of a better quality, higher standard or larger size than is required by the above rules, regulations or requirements, the Contract Documents shall take precedence.

In the event any equipment or methods indicated on the Contract Documents or specified herein conflict with applicable regulations, Contractor shall notify the Engineer in writing prior to installation. Costs for replacement of such work incurred due to the failure of the Contractor to provide the required notification, shall be the Contractor’s responsibility.

When requested, Contractor shall furnish the Engineer with Certificates of Compliance indicating that the materials comply with the Contract Documents.

4.3 PRODUCT DELIVERY, STORAGE AND HANDLING

Contractor shall exercise care in handling, loading, unloading, and storing of irrigation materials and equipment. All pipe shall be transported in a vehicle which allows the length of pipe to lie flat so as not to be subject to undue bending or any concentrated external load at any point. Any section of pipe that has been dented or damaged shall be replaced with new pipe at the Contractor’s expense.

All materials shall be of stock and of brands and types noted on the Contract Documents and as specified herein, or approved equal. Approval of any items, alternates or substitutes indicates only that the product apparently meets the specifications as indicated on the Contract Documents and specified herein on the basis of the information or samples submitted.

Manufacturer's specifications and detailed drawings shall be followed in cases where the manufacturer's installation methods are not shown in the Contract Documents and specified herein. Manufacturer's warranties shall not relieve the Contractor of liability under the provisions for the guarantees. Such warranties shall only supplement the guarantees.

In accordance with Subsection 1.3, Product Options and Substitutions, of Section 01600, Product Requirements, the Contractor shall submit to the Engineer in triplicate a request for substitution of "as equal" materials. The request shall have full documentation attached including catalog cuts, descriptive literature, the manufacturer, model number, installation data and samples, when required by the Engineer. One (1) set will be returned to the Contractor. Equipment or materials installed or furnished without the prior approval of the Engineer may be rejected and such materials required to be removed at the Contractor's expense.

A. PVC PIPE (PLASTIC PIPE)
All PVC pipe shall be Schedule 40 unless a thicker and/or stronger pipe is specifically required. PVC pipe shall be resistant to ultra-violet light and shall conform to the requirements in ASTM Designation D1785.

B. BRASS PIPE
Brass pipe, where indicated on the Contract Documents, shall be eighty-six percent (86%) red brass, American National Standards Institute, Schedule 40 screwed pipe, conforming to Federal Specifications WW-P-351. Fittings shall be medium, brass, screwed 125-pound class, conforming to Federal Specifications WW-P-460.

C. GALVANIZED PIPE
Galvanized steel pipe, where indicated on the Contract Documents, shall be ASA Schedule 40 mild steel screwed pipe. Fittings shall be medium galvanized screwed beaded malleable iron. Galvanized pipe shall never be used without the specific approval of the Engineer.

D. MASTER AND ISOLATION BALL VALVES
All master and isolation valves shall be ball valves unless another type of valve is specifically noted in the Contract Documents.

Ball valves shall be bronze with screw-in bonnet, line-sized manufactured as Nibco, or approved equal, installed as indicated on the Contract Documents. Valves shall conform to American Water Works Standards. Valves shall be designated to permit dismantling to replace sealing components without removal of the valve body from the pipeline. The operating unit shall be line-sized as indicated on the Contract Documents and have an arrow cast in the metal indicating the direction of flow.

E. ANTI-DRAIN VALVES (CHECK VALVES)
Where indicated on the Contract Documents and/or as needed for field

conditions, anti-drain valves shall be as indicated in the irrigation legend on the Contract Documents, or approved equal. Anti-drain valves shall be line-sized and installed on the riser directly under the irrigation heads in accordance with manufacturer's recommendations.

F. QUICK COUPLING VALVES

Quick coupling valves shall be as indicated in the irrigation legend on the Contract Documents, or approved equal. Quick coupling valves for potable water systems shall be constructed of brass with a molded vinyl or thermoplastic rubber locking yellow cover. Coupler keys and hose ells shall be of the same manufacturer as the valve.

G. REMOTE CONTROL VALVES

Remote control valves shall be solenoid activated, factory assembled, as indicated in the irrigation legend on the Contract Documents or approved equal, and installed according to the details on the Contract Documents and local codes.

H. VALVE BOXES

Valve boxes for ball valves shall be a ten inch (10") round plastic box with snap-lock tab cover manufactured as indicated on the Contract Documents, or an approved equal, installed in accordance with local standards and codes, permanently marked by indenting "VB" on the cover.

a) Valve boxes for automatic remote control valves shall be a square or rectangular plastic box with bolt-down cover manufactured as indicated on the Contract Documents, or an approved equal, installed in accordance with local standards and codes, permanently marked by indenting "RCV" and station number on the cover.
b) Valve boxes for quick couplers shall be Amotek, or approved equal.
c) Valve box lids shall be green in color.

I. BACKFLOW PREVENTION UNIT

Backflow prevention unit shall be factory assembled and shall be as indicated in the Contract Documents, or approved equal.

J. CONTROLLERS

Controllers shall be as indicated on the Contract Documents, or approved equal.

K. CONTROL WIRING

Connections between the controller and the solenoid activated remote control valves shall be made with direct burial copper wire, #14 AWG, Type U.F, 600 volt. Wire shall be PVC insulated of single conductor type, underground feed cable, U.L. approved.

L. IRRIGATION HEADS

Irrigation heads shall be of the manufacturer, size, type, and rate of precipitation with the diameter (or radius) of throw, pressure, and discharge as specified in the irrigation legend and installed as shown in the details on the Contract Documents and in accordance with the manufacturer's recommendations.

Equipment of one type and flow characteristic shall be from the same

manufacturer and all equipment shall bear the manufacturer's name and identification code in a position allowing identification in the installed position.

4.5 INSTALLATION

A. Pipe Installation/Notification:

Before laying new pipe, expose the existing pipe at the proposed point of connection. The Engineer shall be notified a minimum of two (2) full Working Days prior to connection for inspection of existing conditions and to control shut downs and make any adjustments necessary to accomplish the Work and protect existing facilities. Prior to installation, Contractor shall stake all supply lines, routing, and location of irrigation heads for inspection by the Engineer.

Trenches shall be of open vertical construction to appropriate depths as indicated on the Contract Documents and specified herein. Pipe shall be laid on a uniform compacted grade, free of rocks or sharp-edged objects, and snaked from side to side in the trench to allow for expansion and contraction.

All lines shall have a minimum horizontal clearance of six inches (6") from each other and from lines of other trades. Parallel lines shall not be installed directly over one another. Provide the following minimum coverage (where lines occur under paved areas for vehicular traffic, these coverage depths shall be considered below subgrade) to:

- Pressure mainline — eighteen inches (18")
- Non-pressure lateral lines — twelve inches (12")
- Control Wiring — eighteen inches (18")

Pipe shall be cut square and the ends reamed out to the full inside diameter for the pipe and thoroughly cleaned of dirt, dust, shavings and moisture before installation.

PVC pipe shall be protected from tool damage during assembly. PVC pipe which has been nicked, scarred or damaged shall be removed and replaced at Contractor's expense. PVC solvent-weld joints shall be made in accordance with ASTM D-2855. Pipe shall not be exposed to water for twenty-four (24) hours after solvent- weld joints are completed. Teflon tape shall be used on all threaded PVC to PVC and on all threaded PVC to metal joints. Light wrench pressure is all that is required.

Constant pressure main line PVC piping carrying potable water shall be marked on the top of the pipe with a three inch (3") wide warning tape running continuously for the entire length. The tape shall be located three inches (3") above the top of the pipe. Tape color shall be yellow or the current standard in the industry.

Changes in pipe line size shall be accomplished with reducer fittings.

Brass pipe and fittings shall be assembled using Teflon tape dope, applied to the male threads only.

Galvanized pipe threads shall be cut with clean, sharp dies, conforming to American Standards Association Specification. Male pipe threads shall be coated with a non-toxic, non- hardening, non-corrosive joint compound. All galvanized pipe and fittings installed below grade shall be painted with two (2) coats of Koppers #50 Bitumastic, or

approved equal. Pipes may be completely wrapped with an approved asphaltic tape in lieu of painting.

Pipe to be installed on grade shall be anchored to the ground at intervals not to exceed ten feet (10'), with a eighteen inch (18") long #4 rebar, with a "J" hooked radius.

B. Water Meters:

Irrigation system shall be connected to water supply points as indicated in the Contract Documents. Water meters will be installed or provided by the City of Santa Clara Water Utility. The Contractor shall coordinate with the Water Utility and apply for service. The Contractor is required to pay for water used until the project is accepted by the City, including any landscape maintenance period, unless otherwise provided in the Contract Documents.

C. Valves and Valve Boxes:

Valve boxes shall be set flush with finish grade, with valves set at sufficient depth to provided clearance between the cover and the valve. Valves shall be installed with operating nuts.

Contractor shall install quick coupler valves as indicated in the details on the Contract Documents and in accordance with manufacturer's recommendations.

All remote control valves shall be marked with plastic tags and numbers to indicate controller and station number.

D. Irrigation Controller:

Contractor shall install irrigation controller(s) in accordance with the Contract Documents and the manufacturer's recommendations. The electrical service shall be as indicated in the Contract Documents. The Contractor shall obtain the necessary permits and inspections for activation of the electrical service. The enclosure for the controller shall be as indicated in the Contract Documents. The Contractor is required to pay for electricity used until the project is accepted by the City, including any landscape maintenance period, unless otherwise provided in the Contract Documents.

E. Control Wiring:

Pilot wires shall be a different color for each valve. Common wires shall be white with a different color stripe for each automatic controller. Tagging each end is an acceptable alternative. Provide a separate ground wire for each controller. Install a spare control wire of a different color along entire mainline. Loop thirty-six inches (36") excess wire into each single box and into one valve box in each group of valves.

Wire shall be buried a minimum of eighteen inches (18") in depth and whenever possible shall occupy the same trench and shall be bundled and secured to irrigation pipelines at ten foot (10') intervals with plastic electrical tape, providing sufficient slack for expansion and contraction. Wire for slopes shall be installed in a UVR PVRC sleeve laid adjacent to on-grade water pipes.

An expansion curl shall be provided within three feet (3') of each wire connection and

change of direction, and at least every one hundred feet (100') of wire length on longer runs. Expansion curls shall be formed by wrapping at least fifteen feet (15') of wire around a one-half inch (½") outside diameter pipe, then withdrawing the pipe.

All splices shall be made with Spears DS–400 connectors or approved equal. Use one (1) splice per connector sealing pack. Wire splices shall be located in pull boxes set flush with finish grade. Field splices between the controller and remote control valves will not be permitted, without prior approval of the Engineer.

F. Sleeving

Irrigation lines and control wiring shall be installed under paving in separate PVC Schedule 40 sleeves. Sleeves shall be installed with minimum coverage depths of eighteen inches (18") and shall extend twelve inches (12") beyond the edge of the paved area. Unless otherwise indicated on the plans, a plastic valve box shall be placed over each end of every sleeve to facilitate locating and using the sleeve in the future.

Piping under existing pavement may be installed by jacking, boring, or hydraulic driving, except that no hydraulic driving will be permitted under asphaltic concrete pavement. Where cutting or breaking of existing pavement is necessary, obtain permission from the Engineer and make all necessary repairs and replacements to the satisfaction of the Engineer.

G. Irrigation Heads

Spacing of heads shall not exceed the maximum shown in the Contract Documents and in no case exceed the maximum spacing recommended by the manufacturer. Riser units shall be oriented perpendicular to the finish grade, installed in compliance with the Contract Documents, with nipples of the same size as the riser opening in the irrigation head.

H. Rubber Ring Seal Joints

Rubber ring seal joints shall be factory-made male end or prepared field-cut male end to exact specifications of factory made end. Carefully clean bell or coupling and insert rubber ring without lubricant. Position ring carefully, to manufacturer's recommendations. Lubricate male end according to manufacturer's recommendations and insert male end to specified depth. Use hands only when inserting PVC pipe. Thrust blocks shall be provided where necessary to resist system pressure on ring-tite pipe and fittings. Blocks shall be concrete and the size shall be based on an average soil safe bearing load of one thousand (1,000) pounds per square foot. Form thrust blocks in such a manner that concrete comes in contact only with the fittings. Thrust blocks shall be between undisturbed or properly compacted soil and the fitting.

4.6 ADJUSTING AND TESTING THE SYSTEM

Contractor shall furnish all equipment, materials and labor to conduct pipeline pressure tests, coverage tests and operational tests. All tests shall be made in the presence of the Engineer, prior to weed abatement operations and soil preparation. Trenches shall not be backfilled until the pipeline pressure tests have been performed to the satisfaction of the Engineer.

After completion of pipeline assembly, prior to installation of terminal fittings, entire system shall be thoroughly flushed to remove dirt, scale or other deleterious material. Irrigation heads shall be installed only after flushing of the system has been accomplished to the complete satisfaction of the Engineer. With open ends capped, test pressure supply lines for six (6) hours at 125 PSI. Center load PVC pipe with a small amount of backfill to prevent arching and whipping under pressure.

Coverage test shall demonstrate that each station area is balanced to provide uniform and adequate coverage. Operational tests shall demonstrate the performance and operation of all components of the controller system. Remote control valves shall be properly balanced, heads adjusted for coverage and system shall be workable, clean and efficient. Coverage and operational tests will not be considered complete without as-built drawings.

Contractor shall be responsible for correcting any portions of the work that are not properly installed and retesting until installation has been accepted by the Engineer.

Contractor shall be responsible for notifying the Engineer a minimum of two (2) full Working Days in advance for the following inspections: System Layout; Pressure Pipeline Tests; Coverage Tests; Operational Test (prior to commencing planting operations).

4.7 BACKFILLING

Backfill shall be with clean dirt free from large rocks, stones, and other objectionable materials, exceeding one inch (1") in diameter. Note: this backfill requirement shall not supersede requirements for Topsoil and/or Prepared Soil Mix.

Trenches located under areas where paving or concrete will be installed shall be backfilled with a six inch (6") layer of sand below the pipe and three inches (3") above the pipe.

4.8 CONTRACTOR FURNISHED TOOLS, EQUIPMENT, AND DRAWINGS

Contractor shall furnish the Engineer the following materials at the end of construction and prior to acceptance:

- Two (2) sets of special tools required for removing, disassembling and adjusting each type of sprinkler and valve supplied on the project.
- Two (2) keys for each controller and enclosure.
- Five (5) spare irrigation heads of each type specified and installed on this project.
- Five percent (5%) of each type of drip system tubing.

4.9 AS-BUILTS AND RECORD DRAWINGS

On a daily basis, the Contractor shall maintain and keep up to date one (1) set of blueline drawings showing the "as-built" location of major features of the project and indicating changes that occurred during installation. Contractor shall comply with Section 01780, Project Record Documents.

Record Drawings shall include dimensions from two (2) permanent points of reference (i.e. buildings, monuments, sidewalks, curbs, pavement) of the location of the following items: point of connection to existing water lines; point of connection to existing electrical power; gate valves; routing of irrigation pressure lines (dimensions, maximum one hundred feet [100'] along route), remote control valves; routing of control valves; quick

coupling valves; other related equipment as requested by the Engineer.

4.10 PHASING DIAGRAMS/CONTROLLER CHARTS

As-built/Record Drawings shall be approved by the Engineer before phasing diagrams are prepared. Contractor shall provide two (2) phasing diagrams for each controller supplied. The phasing diagrams shall show the areas controlled by each controller and shall be the maximum size which can fit through the controller door. The phasing diagrams shall be a photographic print with a different color indicating the area of coverage for each station. When completed and approved, the controller charts shall be hermetically sealed between two (2) pieces of transparent plastic, each being a minimum of twenty (20) mils thick.

4.11 OPERATION AND MAINTENANCE MANUALS

Prepare and deliver four (4) individually bound copies of the Operation and Maintenance Manual to the Engineer at least ten (10) calendar days prior to acceptance of the Work. The Manual shall include descriptive material of equipment installed and shall be in sufficient detail for the Agency maintenance personnel to understand, operate and maintain all equipment. Each complete, bound manual shall include, but not be limited to: index sheet stating Contractor's address and telephone number, list of equipment with names and addresses of local manufacturer's representatives; catalog and part sheets on all material and equipment installed; guarantee statement; complete operating and maintenance instructions.

4.12 GUARANTEE

Contractor shall guarantee all materials and equipment for one (1) year from the date of final acceptance of the Work (after the required maintenance period) in accordance with Subsection 9, Warranty, Guaranty and Inspection of Work, of Document 00700, General Conditions.

5. IRRIGATION SYSTEM SUPPLEMENT FOR RECYCLED WATER

5.1 DESCRIPTION

This section is supplemental to Section 4.0 and is to be used when installing recycled water systems. Where applicable, installation shall be in accordance with the requirements of Section 4.0.

City and/or State Department of Public Health regulations for recycled water systems shall take precedence over these Specifications where they are in conflict.

5.2 MATERIALS

Pipe shall be Class 315 purple-colored PVC pipe as manufactured by Alterline, or approved equal, marked continuously on two (2) sides of the pipe with the following: "CAUTION RECYCLED WATER." Plastic pipe for lateral lines shall conform to ASTM 2241 or ASTM D-1784. Fittings and couplings shall be purple-colored PVC.

5.3 INSTALLATION

A. PIPE INSTALLATION

Where recycled and potable water pressure main line piping cross, the recycled water piping shall be installed below the potable water piping in a Schedule 40 purple-colored PVC sleeve which extends a minimum of five feet (5') on either side of the potable water piping. Contractor shall provide a minimum vertical clearance of six inches (6"). Conventional (white) PVC pipe may be used for sleeving material if it is taped with a three inch (3") wide red warning tape which reads: "CAUTION RECYCLED WATER."

B. REMOTE CONTROL VALVES
Remote control valves shall be marked with three inch by four inch (3"x4") purple-colored waterproof tags marked in black on one side with the words: "WARNING – RECYCLED WATER – DO NOT DRINK" and on the reverse side with the words: "AVISA – AGUA IMPURA – NO TOMAR." Tags shall be as manufactured by
T. Christy Enterprises or approved equal. Tags shall be attached to the valve stem or solenoid wire directly or with a plastic tie wrap or attached to the valve with existing valve cover bolt.

C. QUICK COUPLING VALVES
Quick coupling valves shall be constructed of brass with a purple rubber or vinyl cover with a permanently stamped or molded warning on the cover reading: "RECYCLED WATER – DO NOT DRINK" in English and Spanish and the international "do not drink" symbol. Tags shall be as manufactured by T. Christy Enterprises or approved equal.

D. VALVE BOXES
Warning labels on lockable valve boxes for recycled water systems shall be constructed of a purple waterproof material with the warning permanently stamped or molded in the cover reading: "RECYCLED WATER – DO NOT DRINK" in English and Spanish with the international "do not drink" symbol.

E. CONTROLLERS
Contractor shall post signs at each controller indicating the use of recycled water. At least one (1) purple sign shall be posted on the inside of the door, bearing the words "ATTENTION – CONTROLLER UNIT FOR RECYCLED WATER" in English and
Spanish, as manufactured by T. Christy Enterprises or approved equal.

6. PLANTING

6.1 DESCRIPTION

This work shall consist of furnishing all labor, materials, equipment, facilities, transportation and services to complete all planning and related work as shown on the Drawings and/or specified herein.

The general extent of the planting is shown on the Drawings and includes, but is not necessarily limited to the following:

1. Nursery Grown Shrubs
2. Nursery Grown Trees
3. Contract Grown Shrubs

4. Contract Grown Trees
5. Mulch
6. Nursery Grown Ground Cover
7. Nursery Grown Vines
8. Hydro-seeding
9. Maintenance of the planting after installation through the beginning of the 180 Calendar Day Maintenance Period
10. 180 Calendar Day Maintenance Period (Landscape Maintenance Period or Maintenance Period)

Plant materials shall meet or exceed the American Nurserymen Association standards, as specified in the current edition of American Standard for Nursery Stock, published by the American Association of Nurserymen, Inc. Provide plant materials in accordance with applicable California Agricultural Codes.

The Contractor shall coordinate planting work with other site improvements. Unless otherwise specified, underground and surface improvements shall be installed prior to planting operations.

Contractor shall be responsible for locating and staking existing sewer, water, and utility lines above or below grade that might be damaged as a result of planting operations. The Contractor is to make utility notifications in accordance with Section 01715, Existing Underground Facilities. The Contractor shall assume sole responsibility for any cost incurred due to damage of aforementioned utilities.

All work on the irrigation system, including hydrostatic, coverage, and operational tests, and the backfilling and compaction of trenches shall be performed prior to planting operations.

The actual number of plants shall be governed by the spacing requirements and/or specific locations shown on the plans.

The Plant List is for the Contractor’s convenience only. Any discrepancies between the plant list and the plans shall not entitle the Contractor to additional remuneration.

Planting and/or seeding shall be performed by personnel familiar with planting procedures and under the supervision of a qualified planting foreman. The planting foreman shall be on the job site whenever planting is in progress.

Obtain permission from City before shutting off water lines. Keep disruptions of existing systems to a minimum. Repair any damaged water lines caused by planting operations.

For identification purposes, flag or stake existing valve boxes and sleeves, cleanouts, junction boxes, and similar structures before beginning work under this section of the Specifications, and maintain such flags or stakes until final inspection.

All soil preparation and planting operations shall be conducted under favorable weather conditions only. Soil shall not be worked when excessively dry or wet.

6.2 REQUIREMENTS OF REGULATORY AGENCIES

Provide certificates of inspection of landscape materials with shipments as required by governmental authorities. Comply with all applicable Federal, State and County

regulations governing landscape materials.

Comply with State of California Administrative Code, Title 8, Industrial Relations, Chapter 4, Subchapter 4, Construction Safety Orders, and with rules and regulations of all regulatory agencies having jurisdiction over the work.

Inspection by Federal or State governments at place of growth does not preclude rejection of plants at project site.

6.3 SUBMITTALS

The Contractor shall submit samples of topsoil, prepared soil mix, fertilizers, organic amendment, and soil conditioners, along with necessary documentation, to the Engineer for inspection two (2) full weeks prior to incorporation in the work.

At time of delivery to the site, Contractor shall furnish the Engineer with delivery receipt(s) and Certificate of Compliance, in accordance with Subsection 1.10, Quality Assurance Control Submittals, of Section 01330, Submittal Procedure, stating that material specified meets the Contract requirements.

Submit to the Engineer samples and certified analysis of mulch, fertilizer, pre-emergent herbicide, or other materials for approval before delivery to the site.

For standard products, submit the manufacturer's analysis.

For all other materials submit an analysis made by a recognized laboratory in accordance with the current methods of the Association of Official Agricultural Chemists.

The Engineer reserves the right to take and analyze samples of materials for conformity to Specifications at any time. Furnish samples of materials to the Engineer upon request. Immediately remove rejected materials from the site.

Upon receipt of contract from the City, the Contractor is to immediately purchase all container grown plant material for the project and hold said material at the nursery until installation. Contractor to submit progress billings to City, showing evidence of purchase of plant material. Plant material shall be available at any time during the contract for inspection by the Engineer, if requested. Any material found unsatisfactory is to be replaced by approved equal material at the Contractor's expense.

6.4 CARE OF EXISTING PLANT MATERIAL

When specifically required by the Construction Documents or when necessary, as determined by the Engineer, to allow the Work to be performed or protect the public, an International Society of Arboriculture (ISA) certified arborist shall perform any necessary or required pruning work on existing plants in accordance with the International Society of Arboriculture Western Chapter's Pruning Standards and ANSI Z133.1. Dead wood larger than one-half inch (½") in diameter, branches extending over the paved areas that hang within twelve feet (12') of finished surface, and diseased branches shall be removed. Stubs, improper cuts, and broken limbs shall also be removed. Pruning efforts shall give the plant proper shape and a balanced appearance. "Heading Back" cuts at right angles to the line of growth shall not be permitted. Trees shall not be poled or the leader removed, nor shall the leader be pruned or "topped off." Wounds shall be cleaned and left open to the elements to heal naturally. Cost for the care of existing plant material is considered

incidental and is included in the various items of the Work.

6.5 SUBSTITUTIONS

If Contractor wishes to substitute plants for those indicated in the Drawings, Contractor shall submit a list of the proposed substitutions to the Engineer at least thirty (30) days before beginning Work covered by this Section 02020. Substitute plants will be acceptable only if specified plants are proven unavailable or unacceptable to the Engineer. When substitutions are allowed, all requirements of the plant shall be met, and in no case shall substitutions be made without the written approval of the Engineer.

6.6 INSPECTION

All reviews by the Engineer of planting work shall be requested by the Contractor at least two (2) full Working Days prior to anticipated review.

The Contractor shall request a review by the Engineer at the following points in the progress of the work:

1. Upon delivery to the site.
2. Upon completion of planting.
3. Upon completion of the maintenance period.

The Engineer reserves the right to inspect all planting materials further for size and condition of root systems and for injuries and latent defects and to reject unsatisfactory or defective plant material at any time during the progress of the work. All plants shall have nursery name tags on each plant. Plants without nursery name tags may be rejected by the Engineer.

The Contractor shall schedule his work so that the Engineer review of the quality, size, variety, placement, and orientation of all plants can be accomplished in a single trip for each variety of plant.

No plant material shall be planted until the Engineer has approved its quality and placement.

The Contractor shall, upon demand, produce records to verify the ordering and delivery of specified quantities and types of materials for this job.

6.7 PROTECTIONS OF EXISTING TREES

A. General Tree Protection:

The objective of protecting trees during construction is to reduce the negative impact of construction on trees to a less than significant level.

B. Arborist Notes For Tree Protection:

Contractor shall notify the Engineer three (3) full Working Days in advance of any work requiring digging around or within the drip- line of existing trees. No cutting of any part of any tree, including roots, shall be done without securing approval and direct supervision from the Engineer.

Contractor shall tag and identify existing trees which are to remain within or adjacent to the project limits prior to start of Work. Provide regular watering of existing landscaping affected by the project throughout the construction period.

Protect all existing trees at all times from damage by workers or equipment. A six-foot (6') high temporary chain link fencing acceptable to Engineer, shall be placed at the dripline of existing trees, or if possible, one and one-half (1.5) times the radius of the dripline out from the trunk of the tree. In addition, wrap all trees with straw waddles up to the first branches, then wrap "snow fencing" around the waddles on all trees in the construction zone to protect them from bark damage caused by construction equipment. If construction is to continue during winter months (December 1 through March 31), four (4) tree stakes are to be installed around each tree trunk. The required straw waddle is then to be wrapped around the stakes and the snow fencing around the waddle. This winter system is to prevent excessive moisture around the tree's trunk when rain tends to soak the waddle.

Place four inches (4") to six inches (6") of mulch around all existing trees (out to their drip-line) that are to be preserved prior to any construction. This will help maintain moisture content and prevent compaction if vehicle accidentally drives under the tree within the fencing area.

Grading shall not create drainage problems for trees by channeling water into them, or creating sunken areas.

No trenching will be done within the drip-line of existing trees without the approval of the Engineer.

1. Open trenching in the root zone of any public tree is prohibited except in cases where the trenching falls outside the drip-line of the tree involved.
2. Exceptions will be allowing if, in the opinion of the Engineer, the impact of trenching upon the tree will be negligible.
3. When trenching is allowed, the Contractor must first cut roots along both sides of the proposed trench, as directed by the Engineer, with a Vermeer root cutter prior to any trenching to avoid tugging or pulling of roots.

When construction occurs within drip-line of existing trees, and is approved by the Engineer, Contractor is to place excavated soil and other materials beyond the drip line. When this is not possible, with the approval of the Engineer, place soil on plywood, a tarp, or thick bed of mulch. This is to help prevent cutting into the soil surface when the backhoe or tractor blade refills the trench or removes any excess material.

If trenching is allowed and specifically approved by the Engineer within the root zone, refill open trenches quickly, within hours of excavation. If this is not possible and weather is hot, dry, or windy, Contractor must keep root ends moist by covering them with wet burlap. If temperature is eighty degrees Fahrenheit (80°F) or greater, the burlap must be inspected every hour and re-wet as necessary to maintain a constant cool moist condition. If temperature is below eighty degrees Fahrenheit (80°F), the burlap must be inspected every four (4) hours and re-wet as necessary to maintain a constant cool moist condition. Small roots can dry out and die in ten (10) to fifteen (15) minutes. Larger roots can succumb in an hour or less under unfavorable weather conditions.

When roots two inches (2") or larger must be cut, shovel by hand near the roots and

saw the roots. Accidentally broken roots should be sawed about two inches (2") behind the ragged end. Crushed or torn roots are more likely to allow decay to begin; sharply cut roots produce a flush of new roots helping the tree to recover from its injury.

All grading within the drip-line of trees shall be done with light, approved equipment under the direct supervision of the Engineer. The original grade at base of existing trees is not to change. If necessary, dry wells are to be used if grade is to rise.

No cutting of any part of private trees, including roots, shall be done without direct supervision of a Certified Arborist (Certification of International Society of Arboriculture). The Certified Arborist is to be hired by the Contractor at no cost to the City. The Certified Arborist shall submit a written report of findings and recommendations to the Engineer. The Contractor shall replace any tree(s) that the Engineer directs to be removed, due to as a result of the construction. Engineer will determine species, size, and spacing.

No bore pits are allowed within the drip-line of any tree.

Materials, equipment, temporary buildings, fuels, paints, and other construction items are not to be placed within the drip-line of existing trees.

Contractor shall pay the owner (or the City in the case of trees on public right-of-way) the value of existing trees to remain that died or were damaged because of the Contractor's failure to provide adequate protection and maintenance. In accordance with the following schedule of values, using "Tree Caliper" method established in the most recent issue of the guide for establishing values of trees and other plants prepared by the Council of Tree and Landscape Architects:

Tree Caliper	Tree Value
7 inches	$2,400
8 inches	$3,400
9 inches	$4,400
10 inches	$5,200
11 inches	$6,200
12 inches	$7,200
13 inches	$8,200
14 inches	$9,200
15 inches	$10,000
16 inches	$11,000
17 inches	$12,000
18 inches and over add for each caliper inch	$1,200

C. Tunneling:

All trees with a trunk diameter in excess of five inches (5") as measured four and one-half feet (4.5') above natural grade (Diameter Breast Height) where there is insufficient space to bypass the drip-line by trenching, must be tunneled. The beginning/ending distance of the tunnel from the face of the tree in any direction and the depth of the tunnel are determined by the diameter of the tree as specified in the table below:

Tunneling Distance and Depth:

TREE TRUNK DIAMETER AT 4.5 FEET ABOVE NATURAL GRADE	TUNNELING DISTANCE FROM THE FACE OF THE TREE IN ANY DIRECTION (MINIMUM)	TUNNELING DEPTH (MINIMUM)
OVER 5 inches - 9 inches	5 feet	2.5 feet
10 - 14 inches	10 feet	3.0 feet
15 - 19 inches	12 feet	3.5 feet
OVER 19 inches	15 feet	4.0 feet

6.8 MATERIALS

A. Top Soil and Prepard Soil Mix:

Prepared soil mix shall be "CK Mix" with a pH of 6.8 to 7.4 as manufactured by Ciardella's Garden Supply, 1001 San Antonio Avenue, Palo Alto, CA (telephone: 650-321-5913), or approved equal.

Topsoil shall be Curtner Sandy Loam with a pH of 6.8 to 7.4 as supplied by TMT Enterprises, Inc., 1996 Oakland Road, San Jose, CA (telephone: 1-408-432-9040), or approved equal.

B. Nursery Grown Stock:

Nursery grown stock shall be in accordance with the Plans, these Specifications, and Section 20-2.13, Plants, of the Standard Specifications.

Plant material shall be guaranteed to be in good, healthy, flourishing condition of active growth at the end of one year from the date of acceptance of planting work.

Plants shall be free of insects, dead branches, dead branch tips, and shall have foliage of normal density, size and color, in order to be considered vigorous and thriving. Root bound conditions, including circling or girdling roots, will not be acceptable.

C. Seed:

Seed shall be in accordance with the Plans, these Specifications, and Section 20-2.10, Seed, of the Standard Specifications.

D. Wood Cellulose Fiber For Hydro-Seeding

Wood cellulose fiber for hydro-seeding shall be in accordance with the Contract Documents and Section 20-2.07, Fiber, of the Standard Specifications.

E. Sod:

Specific sod variety shall be as indicated in the Contract Documents.

Sod shall be grown from high quality propagative material, free from weeds, diseases, and insects, and shall meet the standards of regulation for nursery inspection of the State. Sod shall be machine cut at a uniform thickness of five-eighth inch (5/8") (excluding top growth and thatch). Individual pieces shall be cut to the supplier's standard width and length with an allowable deviation of two percent (2%). Broken rolls or uneven ends will not be acceptable. Sod shall be harvested, delivered and installed within a twenty-four (24) hour period.

F. Fertilizer:

Planting tablet fertilizer shall be Agriform (N21-P10-K5), weighing twenty-one grams each, or approved equal. Before filling each planting hole with backfill mix, place tablets in holes per manufacturer's written recommendations at the rates shown on the plans.

Fertilizer shall be commercially processed and conform to the requirements of the Agricultural Code of the State of California. Fertilizer shall be controlled-release, homogeneous resin-coated with an analysis of N16-P7-K12+iron. Iron sulfate shall be a standard commercial brand.

Fertilizers shall comply with applicable requirements of the State Agriculture Code and shall be prepackaged, first grade, commercial quality products identified as to source, type of material, weight and manufacturer's guaranteed analysis. Fertilizers shall not contain toxic ingredients in quantities harmful to human, animal, or plant life.

Commercial fertilizer shall be in pellet form or a granular product having the chemical analysis specified herein and shall be free- flowing material delivered in original unopened containers. Use of material which becomes caked or otherwise damaged shall not be permitted.

Organic base fertilizer shall be comprised of decomposed animal, fish and vegetable matter with humic acids and a bacterial stimulant.

G. Backfill for Palms:

Backfill for palms shall be one hundred percent (100%) coarse, washed plaster sand.

H. Mulch:

Mulch shall be redwood bark chips, medium grind (3/8" to 3/4"). Mulch shall be

applied over the entire planting area for trees, bushes, and shrubs. Mulch shall also be applied to the watering basin, inside the bermed area. Mulch shall be applied at a minimum depth of three (3) inches and be level with the top of the adjacent platform, concrete flatwork, or asphaltic concrete, as shown on the plans, unless directed otherwise.

6.9 MATERIAL DELIVERY AND INSPECTION

Plant names used in the Contract Documents conform to Standardized Plant Names, by the Joint Committee on Horticultural Nomenclature. Names of varieties not included therein conform generally to names accepted in the nursery trade.

All plant materials shall be delivered with legible identification labels. See Subsection 6.6, Inspection.

Plants shall have been grown in a nursery under climatic conditions similar to those in the locality of the project for at least one (1) year prior to delivery to the site. Boxed trees shall be well established in boxes before delivery to the site. Balled stock shall be freshly dug. The boxed or balled stock shall have the original soil in which it was grown, without addition, and the balls shall be whole and intact, and not broken on arrival at the site. Burlap used shall be of sufficient size to enclose the complete dirt ball and shall be tied securely with stout twine. Balled stock or bare rootstock may be furnished where canned containers are specified only with approval by the Engineer.

The Engineer reserves the right to tag certain plant materials at the Nursery to be purchased by Contractor for use in this project. Conditions of these Specifications, including guarantee, apply to such plants.

Container stock shall be delivered to the site in first class condition. Plants requiring support shall have small stakes in containers. Plants shall be handled and stored to maintain a healthy condition and shall be protected from drying out, windburn, or any other injury. Container plants shall not be picked up by the stems or trunks.

Inspection of plant materials required by City, County, State or Federal authorities, shall be the responsibility of the Contractor. Secure permits or certificates prior to delivery of plants to the project site.

Plants may be inspected and approved by Engineer at the Contractor's source prior to delivery to the project site and until acceptance of the work, for size, variety, condition, latent defects and injuries.

6.10 WEED ABATEMENT OPERATIONS

The irrigation system and finish grade shall be approved by the Engineer after weed abatement operations.

Prior to clearing and grubbing any area to receive landscaping, Contractor shall spray all visible weeds with an approved non-selective, post emergent herbicide. Particular care shall be paid to noxious weeds, such as puncture vine, Bermuda Grass, Saint Augustine's Grass, and ivy. Application rate and method shall be as recommended by the manufacturer. After spraying, planting areas shall remain un-watered for a minimum of forty-eight (48) hours. After seven (7) calendar days from the chemical application,

clearing and grubbing may begin.

Contractor shall apply spray chemicals when air currents are still or less than five (5) miles per hour; preventing drifting onto adjoining property and preventing any toxic exposure to persons whether or not they are in or near the project.

After weed abatement operations, and as determined by the Engineer, planting areas shall be scarified to a depth not to exceed one inch (1”). Engineer shall approve weed abatement operations prior to starting planting operations.

6.11 SOIL PREPARATION

A. All planting areas that are to receive trees, shrubs, or groundcover shall receive an application of pre-emergent herbicide such as Rhonestar G or Surflan. The application shall take place after planting but before mulch is applied. Application shall be at the manufacturer’s recommended rate. Immediately apply the required amount of water to activate the herbicide. NOTE: DO NOT APPLY PRE-EMERGENT HERBICIDE TO ANNUAL COLOR BEDS, SOD AREAS, OR HYDRO-SEED AREAS.

Application of pre-emergent herbicide must be witnessed by the Engineer.

B. Areas To Receive Groundcover, Hydro-Seeding, Or Sod:

All areas to receive groundcover, hydro-seeding, or sod shall have the existing soil removed to a depth of twelve inches (12”) below finish grade and replaced with Prepared soil mix. See Subsection 6.8, Materials.

6.12 INSTALLATION

A. Nursery Grown Stock:

In all areas to receive groundcover, remove existing soil to a depth of twelve inches (12”) below finish grade and replace with Prepared soil mix. See Subsection 6.8, Materials.

Protect and maintain according to good horticultural practices, all plant material delivered to the site. Proper maintenance between delivery and planting shall include watering and feeding as necessary and providing protection from animals, wind, excessive sun, and vandals. Store shade plants in the shade and sun plants in the sun.

Plants shall not be handled by stems, trunks or tops, but only by the container. No plant shall be bound with wire or rope so as to damage the bark or break the branches.

Contractor shall exercise caution and provide necessary safeguards to prevent damage to existing site improvements, including planting.

Plants shall be vigorous and of normal habit of growth and shall be free of girdling roots, disease, insect eggs and larvae. Trees shall have straight trunks with the leader intact, unless otherwise specified. All abrasions and cuts shall be completely callused over. Plants shall be of standard size for container and species, unless specified otherwise in the Contract Documents. Any undersized material will be

rejected. The heights of plants and of branching shall be measured when the branches are in normal positions. Plants shall not be pruned prior to delivery, except on special approval.

Gal.= gallon can (plant)

G.C.= gallon can (plant)

O.C.= on center (spacing)

The Engineer reserves the right to stop any work taking place during a period when conditions are considered detrimental to soil structure or plant growth. Contractor's attention is directed to Document 00700, Subsection 13.6, Suspension of Work.

Plant locations shown on the Planting Plan are relative and the Engineer may make adjustments in the location of the plants to achieve the intended results.

Plant holes shall be dimensioned as shown in the Drawings, or at least twice the width and one times the depth of the root ball, whichever is greater. Plant holes shall be roughly cylindrical. The walls and bottoms of plant holes shall be scarified.

If plants do not have young feeder roots showing at the edge of the container, loosen their roots and cut in a few places to encourage new feeder root development along the perimeter of the root ball.

Shrubs and trees shall be set true and plumb with the top of the plant ball, as grown in the nursery can container. The top of the plant ball shall be set approximately three-quarter inch (¾") above the finish grade of the planting area. The Contractor shall be responsible for any settling and shall raise and replant any plants whose crown settles below the finish grade.

Place backfill in bottom of plant hole after making sure base of hole is loose enough for good drainage. After placing plant ball as detailed, firm backfill around ball or roots of plant and water thoroughly.

Form a four inch (4") high berm or ridge of soil in a neat circle at the drip-line of each tree and shrub, to facilitate watering and hold top mulch.

After planting, prune back trees and shrubs as directed by the Engineer. No pruning shall be done without inspection and approval by the Engineer.

B. Plant Pit Percolation Tests:

Proper drainage of plant pits is necessary. Contractor shall perform percolation tests as following:

Test for percolation shall be done prior to plant material installation to determine positive drainage of plant pits. Engineer shall be notified of all soil and drainage conditions detrimental to growth and plant material. Contractor shall submit proposal for correcting the condition.

Test the completed installation with a minimum of one (1) percolation test per shrub planting pit if shrub is of 15-gallon size or greater and one (1) random percolation test

per 300 square feet of area. In addition, all tree pits shall be tested with percolation pits with one (1) pit per tree up to and including twenty-four inches (24") box size and three (3) pits per tree over twenty four inches (24") box size. Additional pits may be indicated in the Contract Documents. Dig a hole in the soil ten inches (10") in diameter and ten inches (10") deep. Fill with water and let it drain completely. Immediately refill with water and time the rate of fall of the water in the hole. The water shall recede at a minimum rate of three- quarter inch (3/4") per hour. All testing shall be done in the presence of the Engineer.

If it is determined by the Engineer that the soil in the area of the percolation test is very dry clay or other material that may skew the test results, the Engineer shall have the option of directing the Contractor to fill the test hole with water as many as four (4) times prior to the timed test.

Soil that does not meet the drainage requirements shall be removed, replaced, and/or modified to meet the minimum percolation required, as directed by the Engineer. Removal, replacement, and/or modification, when directed by the Engineer, shall be considered extra work.

C. Tree Staking and Guying:

Stake or guy trees according to the details as shown on the Contract Documents and as specified herein. Install trees before lawns are planted, when applicable. Place each tie as shown in details, in a figure eight pattern with a loop large enough to allow for two (2) years growth.

D. Hydro-Seeding:

Remove existing soil over the entire area to receive hydro-seeding and place twelve inches (12") of Topsoil. See Subsection 6.8, Materials.

Hydro-seed mix shall be Pacific Coast Seed Native Ornamental Fine Fescue Mix or approved equal. Pacific Coast Seed (925) 373-4417. Unless otherwise noted, mix shall be applied in the following quantities:

#/Ac.	Species/Common Name - 70 Total Lbs.
30	Festuca rubra "Molate Blue"/Molate Blue Fescue
20	Festuca occidentalis/Western Fescue
20	Festuca idahoensis/Native Idaho Fescue

Contractor shall provide adequate water by hand or by temporary sprinkler system to ensure hydro-seed establishment.

An agricultural suitability report that has been prepared for the specific site shall take precedent over the following materials. If such report is not available, the following materials shall be of such a character that when dispersed in a uniform slurry shall form an absorbent porous mat:

3000 gallons per acre Fresh Water

2000 gallons per acre Wood Cellulose Fiber

80 gallons per acre Organic Stabilizer

600 gallons per acre Tri-C 6-2-4, or approved equal

Water shall be fresh and free of impurities, excess chlorine, and salts.

Fiber shall be clean, weed-free mulch of wood cellulose containing no germination or growth-inhibiting factors. Fiber shall contain a harmless, temporary green dye.

Mixing shall be performed in a tank, with a built-in continuous agitation and recirculation system, of sufficient operating capacity to produce a homogeneous slurry and a discharge system which will apply the slurry to the designated areas at a continuous and uniform rate.

The slurry preparation shall take place at the project site and shall begin by adding water to the tank when the engine is at halt throttle. When the water level has reached the height of the agitator shaft, good recirculation shall be established, and at this time the seed shall be added. Fertilization shall then be added followed by the wood cellulose fiber, when the tank is at least one- third (1/3) filled with water. Spraying shall commence immediately when the tank is full.

Contractor shall spray designated areas with the slurry in a sweeping motion, in an arched stream, until a uniform coat is achieved and the material is spread at the required rate per acre.

A slurry mixture which has not been applied within four (4) hours after mixing shall be rejected and replaced at the Contractor's expense.

Hydro-seed only after weed abatement operations and planting of trees and shrubs.

Costs incurred for repair or replacement of bare, sparse or damaged areas shall be the responsibility of the Contractor.

The Contractor is directed to Subsection 7.3, Maintenance of Hydro-seeded Areas, which requires installation of a temporary irrigation system or the use of hand watering to provide water to insure germination and growth to maturity should there be insufficient rainfall.

E. Sod:

Remove existing soil over the entire area to receive sod and place twelve inches (12”) of Topsoil (see Subsection 6.8, Materials) to the grades indicated. Grade, rake, and roll until areas to receive sod are smooth and free of any rocks, soil clods, roots, or any undesirable materials as determined by the Engineer. Prior to laying sod, soil shall be moist, but not saturated, to a minimum depth of six inches (6”). Area to be sodded shall receive sulphate of ammonia at a rate of one pound per 200 square feet.

Sod shall be laid and tamped with butt joints in a staggered “running bond” pattern. After installation, sod shall be rolled with a landscape hand roller filled with water.

F. Palms:

Palm trunk condition shall be free of any scarring or blemishes. “Pineapple” shall be formed to the satisfaction of the Engineer. Wrap fronds in burlap and keep moist. De-fronding and tying work shall be completed prior to digging the root ball.

Contractor shall remove dead fronds and skin the entire trunk clean to the height of the green fronds. Majority of green fronds shall be removed, leaving ten (10) to fifteen (15) at the apex. Remaining fronds shall have thirty percent (30%) to fifty percent (50%) of the length cut off and shall be lifted up and tied together in two (2) locations in an upright position with cotton rope or cord of not less than one-quarter inch (1/4”). Wire will not be permitted.

Pruning shall be done with sterilized reciprocal saws. Chainsaws will not be allowed. Saw blades shall be sterilized before and between pruning each frond by immersing the blade in a solution of fifty percent (50%) household bleach and fifty percent (50%) domestic water for five (5) minutes. Solution shall be kept up to strength by the regular addition of more bleach.

Root-ball size shall be based upon a 5:1 ratio of brown trunk height to root-ball diameter. Root-ball shall be wrapped in burlap and kept moist. Root-ball shall not be left exposed to direct sunlight or air. No excavation shall be done closer than twenty-four inches (24”) to the trunk at ground level.

Excavation shall extend below the major root system to minimum depth of four feet (4’). The bottom of the root-ball shall be cut off square and perpendicular to the trunk below the major root system.

Contractor shall not free-fall, drag, roll, or abuse the palm or put a strain on the crown at any time. A protective device shall be used around the trunk of the palm while lifting.

Should palms not be planted the day they arrive at the site, Contractor shall protect the crowns and root-balls from the sun and reflected heat from the ground. Palms shall be laid in a single layer on a flat surface. Avoid storing on a concrete or asphaltic concrete surface. Covering material shall be equivalent to a ninety percent (90%) shade cloth or burlap. Plastic or rubberized tarpaulins shall not be permitted. In no case shall palms be stored for more than forty-eight (48) hours.

Palms shall be planted when weather and soil conditions are suitable in accordance with accepted arboricultural practice, preferably between mid April and mid September. The top of the root-ball shall have the same dimension to adjacent grades that it had in the original growing field.

Root growth stimulant shall be equally distributed around the root- ball and water jetted into the backfill when the backfilling is between one-half (1/2) to two-thirds (2/3) up the root-ball. Stimulant shall be Vitamin B-1 as manufactured by Cal-liquid, Crooke, Chican, Ortho, or approved equal. Application rate shall be as recommended by the manufacturer.

The strings tying the palm fronds shall be cut forty-five (45) to sixty (60) calendar days after planting during the summer months and after ninety (90) calendar days during the winter months.

Contractor shall not trim palms for thirty (30) calendar days after untying.

6.13 GUARANTEE AND REPLACEMENT

Contractor shall guarantee the irrigation system and the landscape planting for defects in materials or workmanship for one year from the completion of the 180 Landscape Maintenance Period.

Replacement plant material shall be of the same species, variety, and size as originally planted. Replacement material shall be covered by a one full year guarantee from the date of replanting.

7. LANDSCAPE MAINTENANCE PERIOD

7.1 GENERAL DESCRIPTION

Contractor shall provide all labor, materials, equipment, and incidentals to perform work during the Plant Establishment and Post-Installation Maintenance Periods Landscape Maintenance Period, as specified herein, including but not limited to; litter removal, graffiti removal, drain cleaning, hardscape sweeping, adequate watering of plant materials, mowing, fertilizing, replacing unsuitable plant material and controlling weeds, rodents, and other pests.

The landscape maintenance period shall be 180 calendar days from the date that the City determines that all planting is completed and in conformance with the Contract Documents. Said determination shall be in writing.

The landscape maintenance period shall begin upon approval by the Engineer of the planting work. The Engineer shall give such approval if, upon review, the Engineer finds the work complete and in compliance with the Contract Documents. No additional planting inspection trips will be made, or shall any extensions of contract time be allowed, due to rejected materials or the failure of the Contractor to schedule his work properly or to comply with the requirement of this Section. Engineer must review replacement material prior to installation.

7.2 GENERAL REQUIREMENTS

The Contractor shall provide maintenance of all plants and planted areas until satisfactory completion of the landscape maintenance period as determined by the Engineer. Maintenance operations shall include, at a minimum, weekly watering, weeding, trash pick-up, graffiti removal, replanting, fertilizing, mowing, and any other operations necessary to maintain plant health and vigor, including treatment for fungus, diseases, insect pests, or rodents and a clean, neat appearance of the landscape area, to the satisfaction of the Engineer.

Following planting and initial watering, water all plants and planted areas as necessary to keep the ground moist from the surface to well below the root systems. Hand water planted areas not covered by the sprinkler system. Do not wet the foliage of trees, shrubs, or ground cover when it is exposed to hot sun. The entire irrigation system shall be covered under the landscape maintenance period.

Contractor shall be responsible for removal of any graffiti within the project per City graffiti removal policy. Graffiti must be removed within twenty-four (24) hours of notification of existence.

The Contractor shall protect all plants and planted areas against trespassing and damage at all times. If any plants are injured, they shall be treated or replaced as required by the Engineer. Any damage to, or failure of, the irrigation system shall be immediately corrected. No work shall be executed in, over, or adjacent to planted areas without proper safeguards and protection.

Any plant indicating weakness or probability of dying shall be replaced immediately by the Contractor at his expense.

Plant basins shall be kept in good condition.

Any plants blown over, and not permanently damaged, shall be replanted and re-staked.

Any plants which settle below the specified level of planting shall be taken up and replanted at the proper level.

Any tree ties that are too tight or too loose shall be adjusted. Broken ties shall be immediately replaced.

All planted areas shall be watered, cleared of weeds and debris, and presented in neat and orderly condition for final inspection.

All clippings, trimmings, cuttings, trash, rubbish, and debris shall be promptly removed from the site.

All planted areas, adjacent paved areas, and areas next to buildings, fences, benches, or other structures and site furnishings shall be kept free of weeds, litter, rocks, glass and debris.

Bark, sand, and gravel areas shall be raked as required to keep them free of foreign material.

Paved areas shall be swept and cleared a minimum of once per week and as necessary, as determined by the Engineer, to remove any bark, sand, gravel, soil, or dirt that might be washed onto such areas from adjacent planted areas.

Ten (10) Working Days prior to the anticipated start of the 180-day maintenance period, the Contractor shall request the Engineer to perform a "Pre-maintenance Inspection" of the planting portion of the contract. The Engineer will verify that the planting portions of the Work are complete, the plant material is in good, healthy condition, that all landscape areas are weed-free and in a neat, orderly condition, and that the irrigation system is complete and operational in all respects. The Engineer shall prepare a "Pre-maintenance Punch List" of items to be completed before the 180 Calendar Day Maintenance portion of the Contract can begin.

Upon receipt of the "Pre-maintenance Punch List," the Contractor shall expeditiously correct those deficiencies noted by the Engineer, and provide a letter stating that all of the items on the pre-maintenance punch list have been completed. Once the completion of the Pre-maintenance Punch List has been verified, the Engineer will issue a letter to the Contractor indicating the specific date upon which the 180-day maintenance portion of the contract may commence.

Ten (10) Working Days prior to the end of the 180-day maintenance period, the Contractor shall request in writing a “Final Inspection” of the Work by the Engineer. The final inspection shall be held within the final eight (8) days of the 180-day maintenance period.

The 180-day maintenance period shall not end until all turf areas have solid coverage of the underlying soil with bare spots no longer than four inches (4”) across and with bare areas not exceeding two percent (2%) of total sod area.

If the Engineer finds the plant material to be in good, healthy condition of active growth, and all landscape areas to be weed-free and in neat and orderly condition, then final acceptance of the planting portion of the Contract shall be given effective at the end of the 180-day maintenance period.

If approval for the 180-day maintenance period is not given, the Engineer shall prepare a “Final Punch List” of items to be completed before final acceptance of the planting portion of the Contract. Final acceptance shall then be given upon verification by the Engineer that the Final Punch List items have been completed.

Providing and paying for irrigation water shall be the responsibility of the Contractor until the end of the landscape maintenance period.

7.3 MAINTENANCE PERIOD HYDRO-SEEDED AREAS

If hydro-seeding is not applied in a period where it shall be exposed to sufficient rainfall to germinate and grow to maturity, Contractor shall hand-water or install, at his cost, a temporary irrigation system to provide sufficient water.

Prior to completion of the Maintenance Period, hydro-seeded areas shall be established with a uniform eighty percent (80%) coverage of healthy vigorous growth. Costs incurred for repair and replacement of bare, sparse or damaged areas shall be the responsibility of the Contractor. Seed for replacement shall be of the same type and quantity ration as specified in the Contract Documents. Fertilizer shall be as recommended by an approved soil analysis.

7.4 IRRIGATION SYSTEM

Contractor shall operate the irrigation system in the automatic mode and shall properly and completely maintain all parts of the irrigation system during the landscape maintenance period.

7.5 TYPICAL REQUIREMENTS – 180 CALENDAR DAY LANDSCAPE MAINTENANCE PERIOD

The following is a list of the typical requirements common to most projects. They are some of the minimum requirements necessary to properly maintain the landscape Work.

Watering: Water deeply and slowly to establish moisture to the full depth of the root zone. Watering shall be done in a manner to avoid erosion, excessive runoff, ponding, or water-logging of soil. Hoses and sprinklers shall be used to supplement the sprinkler system where necessary to ensure complete coverage of planted areas.

Weeding: Weed and cultivate planted areas as necessary to keep them free of weeds.

Fertilizer: If during the 180-day maintenance period, there arises a question as to the need for application of fertilizer or minerals or the formulation of a fertilizer, soil samples shall be taken from locations specified by the Engineer, and shall be analyzed by a licensed soil analyst at the Contractor's expense.

The results and recommendations for the formulation and rate of application of fertilizer and minerals shall be submitted to the City and the Contractor shall formulate and apply the fertilizer and minerals as per the recommendations of the Soil Analyst and approved by the Engineer.

Disease and Pest Control: Check for the presence of insects or disease. Address such issues immediately. Spraying for insect and disease control shall be done only in accordance with Department of Agriculture rules and regulations for the application of pesticides.

The spraying shall be done with extreme care to avoid any property damage and any hazard to any person or pet in the area or adjacent areas.

Notification shall be given to the Engineer two (2) full Working Days prior to the Contractor performing "specialty-type" operations, including but not limited to; fertilization, chemical weed abatement, turf aerification, dethatching and fungicide applications. Application of fertilizer or pre- emergent herbicide without notification shall be considered not done.

Contractor shall apply spray chemicals when air currents are still or less than five (5) miles per hour; preventing drifting onto adjoining property or traveled way and preventing any exposure to person whether or not they are in, or near, the Project.

Chemicals to be applied must be approved by the Engineer before they are applied. In no case will extremely toxic materials such as arsenicals, parathion, Tepp, or dieldrin, be permitted. Snails and slugs shall be controlled by the use of an approved non-arsenical methaldehyde bait.

Pruning: Pruning of trees shall be done in accordance with ISA (International Society of Arboriculture) standards.

Staking and Guying: Maintain and replace stakes and guys with equal material. Maintain and replace plant ties to provide support without chafing of bark. Re-tie between old ties.

Replacement of Plant Material: Remove dead and damaged plants and replant with material of equivalent size, condition and variety, subject to approval by the owner.

Trash Pick-up: Remove any trash, papers, litter, debris, or other unsightly materials from the landscape area and dispose of off-site.

The site shall be in a neat and orderly condition for final review.

Graffiti Removal: The Contractor is responsible for graffiti removal and shall comply with the City graffiti removal policies. All graffiti must be removed within twenty-four (24) hours after notification, including during the maintenance period.

Before weeds exceed two inches (2") in height, they shall be removed and disposed

of off-site. Noxious weeds (i.e., blackberry, nut sedge, bind weed, etc.) shall be sprayed with an approved non-selective, post- emergent herbicide and left in place for seven (7) calendar days. Application rate and method shall be as recommended by the manufacturer. As determined by the Engineer, a second application shall be made seven (7) days after the first application. With both applications, areas sprayed shall remain un-watered for a minimum of forty-eight (48) hours. Dead weeds shall be removed seven (7) calendar days after second application and disposed of off-site.

If the Engineer notifies the Contractor of failure to control weeds as specified herein, the Contractor shall kill all weeds within ten (10) calendar days of such notification. The 180 Day Maintenance Period will be extended for each day, after ten (10) calendar days, until such weeds have been killed.

Trees planted shall be pruned or headed back, as requested by the Engineer, to eliminate diseased or damaged growth, reduce the risk of toppling or wind damage, maintain growth within space limitations, maintain natural appearance, and to balance the crown with the root structure.

Contractor shall provide vertical clearance of not less than eight (8) feet over walks, slabs and active play areas, and not less than twelve (12) feet over roadways.

Turf Maintenance: First mowing of turf shall be performed when the grass is two and one-half inches (2 ½") in height. In no case shall the turf be cut lower than one and one-half inches (1 ½") in height. After initial mowing, turf shall be cut as often as necessary to maintain the turf at a height of two inches (2"). In not case shall the turf be cut lower than one and one-half inches (1 ½") in height.

Fertilizing shall be as recommended by a project agricultural suitability report.

Contractor shall trim around irrigation heads, not in excess of two inches (2"), to allow for unimpeded spray and at borders along walks, mow- strips, curbs, and flatwork when necessary.

Turf areas shall consist of uniform cover and present a healthy vigorous growth. Costs incurred for repair or replacement of bare, sparse or damaged areas shall be the responsibility of the Contractor.

Contractor shall remove all grass clipping from project site.

Palm Trees: Maintenance shall include, but not be limited to, spraying to control or prevent disease and weekly water management including soil probing, observation of soil moisture sensing devices (where applicable), and palm tree pruning. Pruning shall be done with sterilized reciprocating saws. Chains saws will not be allowed. Saw blades shall be sterilized before and between pruning each frond by immersing the blade in a solution of fifty percent (50%) household bleach and fifty percent (50%) domestic water for five (5) minutes. Solution shall be kept up to strength by the regular addition of more bleach.

Site furniture and amenities: Shall be maintained in a safe condition without damage or broken parts and free of graffiti and debris. Costs incurred for repair or replacement shall be the responsibility of the Contractor.

7.6 PUBLIC AVAILABILITY

Project site will typically be open to use by the public during the landscape maintenance period, unless access is restricted as a safety issue due to construction of other aspects of the Work. Project site will typically be open to use by the public during the landscape maintenance period, unless access is restricted as a safety issue due to construction of other aspects of the Work. Project site may, at the option of the Engineer, be closed to the public during construction and post-installation maintenance. Contractor shall conduct operations so as to cause no danger or inconvenience to the public.

7.7 PROTECTION

At the City's discretion, Contractor shall be responsible for fencing and maintaining adequate protection at the site during construction and post- installation maintenance. Costs incurred due to damage or replacement shall be the responsibility of the Contractor. Costs for fencing and maintenance of such fencing and site protection shall be included in the various bid items of work and no additional payment shall be made to the Contractor.

Contractor shall apply spray chemicals when air currents are still or less than five (5) miles per hour; preventing drifting onto adjoining property or traveled way and preventing any exposure to persons whether or not they are in, or near, the Project.

7.8 SUBSURFACE DRAINS

Subsurface drains and catch basin grates shall be kept clear of leaves, litter and debris to ensure unimpeded passage of water. Drain-lines shall be periodically flushed with clear water to avoid build-up of silt and debris.

7.9 IRRIGATION SYSTEM

Contractor shall operate the irrigation system in the automatic mode and shall properly and completely maintain all parts of the irrigation system during both the 180-Day Plant Establishment Period. and Post-Installation Maintenance Periods.

The Contractor shall deliver water in sufficient quantities to properly irrigate the plant material and make adjustments to the water application rates to compensate for seasonal conditions. Irrigation system is designed for watering five (5) days a week, between the hours of 10 P.M. and 6 A.M., with even water distribution.

Costs incurred due to repair or replacement of equipment shall be the responsibility of the Contractor. Replacement parts shall be identical to the parts being replaced.

7.10 SITE FURNITURE

Site furniture and amenities shall be maintained in a safe condition without damage or broken parts and free of graffiti and debris.

8. SITE ELECTRICAL

8.1 DESCRIPTION

Contractor shall provide all labor, materials, tools, equipment, and incidentals to furnish and install electrical hookups and fixtures for an operable electrical system

as indicated in the Contract Documents.

Contractor shall apply and pay for all permits, inspections and examinations, and shall include in Bid.

8.2 MATERIALS

Equipment and materials shall be new, complying with the requirements of the codes and regulations of the City and be approved and identified by the Underwriter's Laboratory, Inc. (U.L.).

The regulation and code requirements of Section 86-1.02, Regulations and Codes, of the Standard Specifications shall apply unless superseded or otherwise modified by the code and regulations of the City including the California Electrical Code and the regulations of the City Electric Department.

Contractor shall submit to the Engineer, within fifteen (15) calendar days prior to installation, shop drawings and material list. Catalog cuts and full descriptive literature must be submitted whenever the use of items differs from those specified.

A. RIGID CONDUIT

Conduit and conduit fittings shall be galvanized, conforming to standards of rigid steel conduit as specified by Underwriter's Laboratory Inc., and shall bear the U.L. label on each length. Interior of conduit shall be zinc or enamel. Rigid conduit shall be of the size as indicated on the Contract Documents and used when installed in or under concrete or roadways, in masonry walls, or exposed on buildings. No reducing fittings will be permitted.

The ends of conduits shall be free of burrs and rough edges. Ends of rigid steel conduit shall be properly coupled. Running threads, thread-less connectors and couplings will not be permitted. Rigid conduit in contact with earth shall be wrapped with Hunts Wrap Process #3, or approved equal.

Maximum bend of any conduit shall be ninety degrees (90°) and the minimum radius of a factory bend shall be twelve inches (12").

All threads shall be treated with approved joint compound before fittings are placed thereon.

B. FLEXIBLE METAL CONDUIT

Flexible metal conduit, where indicated on the Contract Documents, shall be liquid-tight with U.L. label and may be used where permitted by code. Fittings shall be "jake" and "squeeze" type. Seal-tight flexible conduit shall be used for all final connections.

C. PVC CONDUIT

PVC Schedule 40 conduit, where indicated on the Contract Documents or permitted by code, may be used in lieu of rigid steel conduit for conduits below grade. Install a code sized insulated (green) copper conductor ground wire in conduit for continuity of equipment ground. Conduits shall be separated by a minimum of three inches (3") between identical systems and twelve inches (12") between power or telephone systems. All elbows and risers shall be rigid

galvanized steel, wrapped with Hunts Wrap Process #3, or approved equal.

D. CONDUCTORS

Copper wire shall conform to the applicable portions of ASTM B-3 and B-8. Wire sizes shall be based on American Wire Gauge (AWG).

Conductor shall be solid copper, minimum #12 AWG, unless specifically noted otherwise on Contract Documents. Conductors #8 AWG and larger shall be stranded copper wire. Type of wire shall be as follows.

Type THWN, 600 volt insulation shall be used for wet or damp locations.

Type THHN, 600 volt insulation shall be used for dry locations.

Low voltage controller conductors for the irrigation system shall be Type UF, sized in accordance with the controller equipment manufacturer's recommendation and shall be U.L. approved for direct burial installation as specified in the Irrigation System Section herein.

E. PULL BOXES

Pull boxes, covers and extensions shall be precast reinforced concrete or of a fire-resistant plastic material. Materials shall be dense and free of voids or porosity. Extensions shall be of the same material as the pull box. Covers/lids shall be bolt-on, tamper-proof type.

F. JUNCTION BOXES AND OUTLETS

Junction boxes and outlets shall be cast aluminum as manufactured by Course-Hinds, Type "FS," or approved equal, with conduit hubs as required.

G. FIXTURES AND LAMPS

Lighting fixtures and lamps shall be as indicated on the Contract Documents, or approved equal.

8.3 INSTALLATION

Provide junction or pull boxes for pulling conductors, where required due to excessive number of bends or on long runs, at intervals not to exceed one hundred feet (100').

Bury underground conduit to a depth of not less than twenty-four inches (24") below finish grade.

Provide expansion couplings where conduits cross expansion joints or for continuous runs in excess of one hundred feet (100') except when embedded in concrete.

For runs in excess of one hundred feet (100') in underground service conduits, install long radius bends (nine [9] times the diameter of conduit).

Cut and patch concrete as required for proper installation of electrical work. All work shall be in accordance with this Section 02020.

Ground all equipment and services in accordance with applicable codes and as

indicated on the Contract Documents.

Conductors shall be continuous between outlets or junction boxes and no splices shall be made except in outlet boxes, pull boxes or hand-holes.

All joints, splices, and taps #10 and smaller (including fixture pig-tales) shall be connected with "Ideal" wing nuts or Scotch-Lok Connector Sealing Packs #8, or approved equal. No. 8 and larger shall be connected with solderless connectors or one hundred percent (100%) electrolytic copper.

Use only approved cable lubricants when pulling conductors.

Install a polyvinyl rope pull wire in all empty conduits.

8.4 INSPECTION AND TESTS

Perform all tests as requested by the Engineer.

8.5 GUARANTEE

Contractor shall guarantee all materials and equipment for one (1) year from the date of acceptance of work as in accordance with Subsection 9, Warranty, Guaranty, and Inspection of Work, of Section 00700, General Conditions.

MEASUREMENT AND PAYMENT

9. Planting shall be measured and paid for on a lump sum basis. The contract lump sum price paid shall include full compensation for furnishing all labor, tools, equipment, soil, landscape irrigation, clearing and grubbing, grading, soil amendments, fertilizer, furnishing and installation of new plant materials, complete in place (except for hydro-seeding), Site furniture and amenities, and all incidentals thereto.

Hydro-seeding shall be measured and paid for by the square foot. The contract price paid shall include full compensation for furnishing all labor, tools, equipment, soil excavation, installation of topsoil, soil preparation, soil amendments, fertilizer, furnishing and installation of hydro-seeding, any required hand watering, and installation, operation, and removal of a temporary irrigation system, complete in place, and all incidentals thereto.

180 Day Maintenance Period shall be paid for on a lump sum basis. The contract lump sum price paid for 180 Day Maintenance Period shall include full compensation for furnishing all labor, tools, equipment, watering, and materials, water and electrical utility costs, including furnishing and replacement of plant material and mulch, for the entire 180 calendar day maintenance period and all incidentals thereto.

Site Electrical will be paid for on a lump sum basis unless otherwise specified in the Contract Documents. Payment shall include all work including materials, installation, training, and all incidentals thereto.

All other Work performed under this Section shall be considered as included under Planting and no further payment shall be allowed therefore.

END OF SECTION

SECTION 02024

LIME STABILIZATION

1.0 GENERAL

1.1 DESCRIPTION

Lime Stabilization work shall consist of preparing the native material, mixing the native material with specified percentages of hydrated lime or quick lime and water and spreading and compacting the mixture to the lines, grades and dimensions shown in the Contract Documents. This item shall conform to Section 24 of the Standard Specifications except as indicated below or in the Contract Documents. Refer to Subsection 1.6, Protection of Public and Private Property, and Subsection 1.16, Traffic Control, of Section 01500, Temporary Facilities and Controls. When working in developed areas, extreme caution shall be exercised to control the dust from the operation. Refer to Section 02007, Storm Water Pollution Prevention.

2.0 MATERIALS

2.1 SOIL

In-place material in the roadbed shall be the native material, to be mixed with the specified lime.

2.2 LIME

Lime shall be dolomitic quicklime conforming to the definitions in ASTM Designation C51 and C977. The use of alternative lime products that are of equal quality and of the required characteristics for the purpose intended will be permitted, subject to the Contractor complying with Subsection 1.3, Product Options and Substitutions, of Section 01600, Product Requirements.

The lime shall be protected from moisture until used in the project and be sufficiently dry to flow freely when handled.

A Certificate of Compliance meeting the requirements of Subsection 1.10, Quality Assurance Control Submittals, of Section 01330, Submittal Procedure, shall be furnished with each delivery of lime and shall be submitted to the Engineer with a certified copy of the weight of each delivery of lime to the jobsite.

2.3 WATER

General Use

Water for dust control and general cleaning shall be from the City's potable water system, the recycled water system, or another approved source. Prior to use of the City's potable water, the contractor must obtain a portable water meter from the City Water and Sewer Utility and arrange payment for water used. Recycled water may be available through the City Water and Sewer Utility subject to their requirements and fees.

Water for Mixing

Water for use in mixing the lime and soil shall comply with Section 24-1.02 of the Standard Specifications. The source shall be approved by the Engineer. If water from the City's potable water supply is used, the contractor must obtain a portable water meter from the City Water and Sewer Utility and arrange payment for water used. The Contractor is responsible for verifying at no additional cost to the City that reclaimed water is suitable for use.

3.0 PREPARING MATERIAL AND FINISH GRADE

Preparation of material and finish grade shall conform to Sections 24-1.04 and 24-1.08 of the Standard Specifications, except that the grade shall not vary more than 0.04 foot above or below the grade established by the Contract Documents. The material to be treated shall contain no solids larger than 2-1/2 inches in any dimension. Removing and disposing of solids larger than 2-1/2 inches shall be considered incidental and is included in the price paid for lime stabilization.

4.0 SPREADING

The percentage of lime to be added to the native material shall be the percentage provided in the Contract Documents or as directed by the Engineer. The amount of lime is a percentage by dry weight of the treated materials in pounds per cubic foot unless otherwise noted.

The depth of treatment shall be as required in the Contract Documents, or as determined by the Engineer. Lime shall be spread by equipment capable of uniformly distributing the required amount of lime for the full depth and width of treatment. The rate of spread shall not vary by more than 10% of the required amount of lime.

The lime shall be prevented from blowing by suitable means selected by the Contractor and approved by the Engineer. The spreading operations shall be conducted in such a manner that a hazard is not present for construction personnel or the public. All lime spread shall be thoroughly mixed into the soil the same day lime spreading operations are performed.

5.0 MIXING

Mixing equipment shall be of the type that can mix the full depth of the thickness to be treated and leave a relatively smooth bottom of the treated section. Mixing and re-mixing, regardless of equipment used, will continue until the material is uniformly mixed, free of streaks or pockets of lime. Moisture content is to be at approximately 3-5% over optimum and all material shall comply with the following requirements:

Sieve Size	Percent Passing
1”	98 Min.
No. 4	60 Min.

When the stabilized material, exclusive of 1 inch or larger clods, is sprayed with a phenolphthalein alcohol indicator solution, areas showing no color reaction will be considered evidence of inadequate mixing.

Mixing equipment shall be equipped with a visible depth indicator showing mixing depth, an odometer or foot-meter to indicate travel speed and a controllable water additive system for regulating water added to the mixture.

Lime treated material shall not be mixed or spread while the atmospheric temperature is below 35 degrees Fahrenheit.

When granulated dry lime is used, the material shall be mixed at least twice. The first mixing shall not occur on the same day as the last mix. The entire mixing operation shall be completed within 4 days of the initial spreading of lime, unless otherwise permitted by the Engineer.

The depth of mixing of the lime-stabilized material shall not vary more than 0.05 feet from the planned depth at any point. Mixing to a depth that exceeds the planned depth by 10% or more shall be considered evidence of an inadequate amount of lime and additional lime shall be added at the Contractor’s expense.

No traffic other than the mixing equipment or other related construction equipment will be allowed to pass over the spread lime until after completion of mixing.

6.0 COMPACTION

The treated mixture shall be spread to the required width, grade and cross section. The maximum compacted thickness of a single layer shall not exceed 6 inches in thickness. Where the thickness exceeds six inches (6”), the mixture shall be compacted in two or more layers of approximately equal thickness. Where the Contractor demonstrates to the Engineer that the equipment and method of operation will provide uniform distribution of the lime and the required compacted density throughout a single layer, the thickness of the layer may be increased with the Engineer’s approval.

Final compaction shall begin as soon as possible and must be completed within 24 hours of final mixing.

Maximum density will be determined on a composite of material from approximately 5 samples (the Engineer shall determine the exact number and location of tests) taken at random locations from the area to be tested and obtained after all mixing operations have been completed, but prior to initial compaction. The Contractor shall be responsible for coordination of sampling and testing and shall allocate sufficient time to sample and test the work.

The finished thickness of the lime treated material shall not vary more that 0.1 feet from the required thickness at any point.

Initial compaction shall be performed by means of a sheepsfoot or segmented wheel roller. Final rolling shall be by means of steel drum roller or a pneumatic tired roller. Vibratory rollers are not to be used.

Areas inaccessible to rollers shall be compacted to the required compaction by other means satisfactory to the engineer.

The lime-stabilized soil shall be compacted to a relative compaction of not less that 95 percent calculated on a dry mass basis. ASTM 1557 and 2922 will determine in-place density of the compacted lime stabilized material. A composite of material from the randomly selected sites, taken at the time in-place density is determined, will be used to determine the in-place moisture content, by ASTM 2216.

7.0 FINISH ROLLING AND GRADING

The surface of the finished lime-treated material shall be the grading plane and at any point shall not vary more than 0.04 feet above or below the grade required in the Contract Documents.

Before finish compaction, if the lime-treated material is above the grade tolerance specified in this section, uncompacted excess material may be removed and used in areas inaccessible to mixing equipment. After finish compaction and trimming, excess material will be removed and disposed of. The trimmed and completed surface shall be rolled with steel or pneumatic tired rollers. Minor indentations may remain in the surface of the finished material as long as no loose material remains in the indentations. Vibratory rollers are not allowed.

At the end of each day’s work, a construction joint shall be made in thoroughly compacted material normal to the centerline of the roadbed and with a vertical face.

If a part-width section is left at the end of the day, the longitudinal joint against which additional material is to be placed shall be trimmed approximately 3 inches into treated material along a neat and straight line having a vertical edge. The material so trimmed shall be removed from the jobsite and disposed of and is considered incidental to the work unless otherwise provided in the Contract Documents.

Should the Contractor choose to perform the mixing with a cross-shaft rotary mixer, the creation of the above construction joint(s) is not required if the Contractor extends the mixer three inches (3”) into the previous day’s work to assure a good bond with the previous work.

8.0 CURING

The surface of each compacted layer of lime treated material shall be kept continually moist until covered by a subsequent layer of lime treated or other material or by applying a curing seal immediately following final trimming and rolling of the lime treated layer. The curing seal shall consist of SS or CSS grade asphaltic emulsion and shall be furnished and applied to the surface of the top layer of lime stabilized material in conformance of Section 94 of the Standard Specifications.

Curing seal shall be applied at a rate between 0.10 and 0.2 gallon per square yard of surface with the exact rate to be determined by the Engineer. The curing seal shall be applied as soon as possible after the completion of final rolling and before the temperature falls below 35 degrees Fahrenheit (35º F).

No construction equipment or traffic shall be permitted on the lime-treated material during the first 3 days after applying the cure seal, unless otherwise permitted by the Engineer.

Damage to the curing seal shall be promptly repaired by the Contractor at the Contractor’s expense, as directed by the Engineer.

9.0 TESTING

9.1 TEST CONTROL

Lime shall conform to the requirements of ASTM C 977 with the exception that when a 250 g test sample of quicklime is dry sieved in a mechanical sieve shaker for 10 minutes, +/- 30 seconds, it shall conform to the following grading requirements:

Sieve Size	Percentage Passing
3/8”	98-100
No. 100	0-25
No. 200	1-15

10.0 AIR MONITORING

The City of Santa Clara may retain an Industrial Hygienist to monitor the air quality during the mixing and curing Operation. The Contractor will be required to be within the required air quality standards.

Permissible exposure limits (PELS) are legally enforceable time-weighted (TWA) exposure limits for air contaminants, which an employee may be exposed to over a normal 8-hour workday. These limits have been adopted and are enforced by Cal OSHA. Current Cal OSHA PEL's are based on standards promulgated by the Cal OSHA Standards Board and are revised periodically based upon scientific information.

Threshold limit values (TLVs) are exposure guidelines that have been established for airborne concentrations by the American Conference of Governmental Industrial Hygienists (ACGIH) and are believed to represent conditions under which nearly all workers may be repeatedly exposed, day after day, without adverse affect. TLVs are also 8-hour TWAs and are based on available information from industrial experience; from experimental human and animal studies; and when possible, a combination of the three.

Recommended exposure levels (RELs) are exposure guidelines that have been established for airborne concentrations by the National Institute for Occupational Safety and Health (NIOSH). Like the TLVs, RELs are based on available information from industrial experience; experimental human and animal studies. RELs are not enforceable under OSHA. Unless otherwise noted RELs are TWA concentrations based on 10-hour workdays during a 40-hour workweek.

All established exposure limits including PELs, TLVs and RELs are used as guides in the control of health hazards and should not be used as fine lines between safe and hazardous concentrations. The best practice is to maintain the lowest practical concentrations of all atmospheric contaminants.

The current Cal OSHA PELs and TLVs for the contaminants for which sampling was conducted are as follows:

Contaminant	PEL mg/cubic meter	TLV mg/cubic meter	Critical Effect(s)
Silica, as quartz *	0.05	0.025	siliconsis/puliminary function/pulmonary fibrosis/cancer/ lung irritation
Respirable dust	5.0	3.0	
Calcium oxide as calcium	2	2	

*American Conference of Governmental Industrial Hygienists (ACGIH): Threshold Limit Values for Chemical Substances and Physical Agents and Biological Exposure Indices for 2000, Cincinnati, Ohio: ACGIH 2000.

Cal OSHA's PELs vary from compound to compound and are based on 8-hour Time Weighted Averages (TWAs) with some having Short Term Exposure Limits (STEL) of higher concentrations allowed for fifteen minute periods and ceiling levels not to be exceeded at any time. The ACGIH TLVs and the NIOSH RELs, while not enforceable by law, are typically found to be more conservative. The TLVs and the RELs both specify TWAs for a variety of chemicals along with STELs and ceiling limits.

11.0 SAFETY PROGRAM

The Contractor shall provide to the Engineer a detailed safety program for the protection of all workers and the public, covering precautions to be exercised and emergency treatment to be available on the jobsite. The program shall include protective equipment for eye, mouth, nose, and skin protection and a first-aid kit with eyewash. Said protective equipment shall be available on the jobsite during all lime stabilization operations. This program shall be submitted for review and agreed upon before any material containing lime is brought to the job site. The Contractor shall actively enforce said program for the protection of its work force and others in the construction area.

12.0 REJECTED WORK

All work not conforming to the requirements of the Contract, shall be made to conform to all such requirements to the satisfaction of the Engineer and at the Contractor's expense, or said work shall be rejected. All rejected materials shall be removed from the site and shall be replaced with materials meeting the Contract requirements. No further compensation shall be allowed.

13.0 MEASUREMENT AND PAYMENT

All work involved in preparing the existing material, furnishing and applying water, mixing, spreading, and compacting the lime treated material, furnishing and applying the curing seal and other related work will be measured and paid by the square yard for lime stabilization.

The above contract prices and payments shall include full compensation for furnishing all labor, materials, tools, equipment, and incidentals for doing all the work involved in constructing the lime treatment, complete in place, as required by the Contract Documents and as directed by the Engineer.

END OF SECTION

THIS PAGE
WAS INTENTIONALLY
LEFT BLANK

SECTION 02026

AGGREGATE BASE

1.0 GENERAL

1.1 DESCRIPTION

This work shall consist of furnishing, spreading, and compacting aggregate base as specified in the Contract Documents. The work shall conform to Section 26 of the Standard Specifications except as indicated in the Contract Documents. Refer to Subsection 1.6, Protection of Public and Private Property, and Subsection 1.16, Traffic Control, of Section 01500, Temporary Facilities and Controls, and Section 02007, Storm Water Pollution Prevention.

2.0 MATERIALS

Unless otherwise specified in the Contract Documents, aggregate base shall be Class 2 aggregate base conforming to Section 26 of the Standard Specifications. Class 2 aggregate base shall be the ¾-inch maximum size material.

2.1 WATER

Water for dust control, general cleaning, moistening and compaction shall be from the City's potable water system, the recycled water system, or another approved source. Prior to use of the City's potable water, the contractor must obtain a portable water meter from the City Water and Sewer Utility and arrange payment for water used. Recycled water may be available through the City Water and Sewer Utility subject to their requirements and fees.

3.0 GRADE TOLERANCE

3.1 SUBGRADE

The subgrade to receive aggregate base, immediately prior to spreading, shall meet the requirements of Section 02019, Earthwork. Specific attention is directed to the relative compaction and subgrade "Truck Load Test" requirements.

3.2 FINISHED GRADE OF AGGREGATE BASE

The surface of the finished aggregate base at any point shall meet the design grade indicated in the Contract Documents or as established by the Engineer with an allowed tolerance of not more than 0.04 feet above or below the above indicated grade.

4.0 SPREADING AND COMPACTING

Spreading and compacting shall conform to Sections 26-1.04 and 26-1.05 of the Standard Specifications, except the grade tolerance of the finish grade of the aggregate base shall be as specified above.

5.0 TESTING

5.1 TEST METHODS

The relative compaction of compacted aggregate base shall not be less than 95%, as determined by Test Method ASTM 2922.

A Certificate shall be furnished to the Engineer, indicating conformance to the requirements as outlined in Section 26 of the Standard Specifications, for the purpose of qualifying the aggregate base at the quarry. However, acceptance of the aggregate base by the Engineer will be determined solely by tests of samples taken at the job site.

The Contractor shall perform a “Truck Load Test,” as provided in Section 02019, Earthwork, on the finished grade of the aggregate base prior to covering with the next layer of material. The Contractor shall correct any failure of the aggregate base to pass the “Truck Load Test.” Corrective measures are to be approved by the Engineer.

The number of tests will be determined by the Engineer in order to assure compliance with the Contract Documents. The Contractor shall pay for retesting of material that fails any compliance test.

5.2 REJECTED WORK

Any and all materials and/or workmanship not conforming to the Contract Documents shall be made to conform to said requirements to the satisfaction of the Engineer, at the expense of the Contractor, or shall be rejected. All rejected materials shall be removed from the site and shall be replaced with materials meeting the above requirements. No further compensation shall be allowed.

6.0 MEASUREMENT AND PAYMENT

All work involved in furnishing and constructing the aggregate base will be measured and paid for by the ton of material, complete in place, unless otherwise specified in the Contract Documents.

Payment made at the bid price per unit of measure shall include full compensation for furnishing all labor, materials, tools, equipment, and incidentals, and for doing all the work involved in constructing the aggregate base, complete in place, as required by the Contract Documents and as directed by the Engineer.

END OF SECTION

SECTION 02027

CEMENT STABILIZATION

1.0 DESCRIPTION

Cement Stabilization consist of reconstructing an existing pavement section by in-place recycling of some of the pavement, base, and subgrade materials and chemically treating to enhance the structural properties of the recycled materials. This work consists of pulverizing existing roadway materials and uniformly mixing with Portland cement and water. The mixture shall then be compacted, finished, and cured in such a manner that the in-place cement-treated mixture forms a dense, uniform mass conforming to the lines, grades, and cross sections shown on the Plans.

2.0 GENERAL

2.1 MATERIALS

Recycled Materials – Material to be treated with Portland cement shall consist of pulverized asphaltic concrete, existing aggregate base, and underlying native subgrade soils. Existing materials shall be pulverized so that 100 percent will pass a 2-inch (50-mm) sieve and a minimum of 85 percent will pass a 1-inch (25-mm) sieve.

Portland Cement – All cement to be used or furnished shall conform to ASTM C150. The cement shall be protected from moisture until used and be sufficiently dry to flow freely when handled. Cement shall be furnished in bulk and not exposed until applied to prepared grade.

Water – Water shall be free from oils, acids, organic matter, and other substances deleterious to the cement treatment of materials. The water shall not contain more than 1,000 parts per million of chlorides nor more than 1,000 parts per million of sulfates as SO4. Water shall be clean and potable and shall be added as needed during mixing, compacting, and finishing operations and during the curing period, as required.

2.2 CEMENT APPLICATION RATE

Contractor shall use a Portland cement application rate of five percent (5%) at a soil weight of 120 pounds per cubic foot or at a different rate as specified in Division 3, Special Provisions.

2.3 CONTRACTORS QUALIFICATION

The Contractor performing cement stabilization shall document a minimum of five years of experience performing similar cement stabilization work. The Contractor shall submit a list of equipment to be utilized in performance of the cement stabilization work. The Contractor shall submit a detailed description of work procedures for approval by the Engineer prior to beginning cement stabilization work. The Contractor performing cement stabilization shall have a representative on site with a minimum of 5 years of experience in cement stabilization. Their function should include coordinating with other contractors and site representatives. All personnel should be properly trained in the cement stabilization process, including quality control and safety procedures.

2.4 PROTECTION OF EXISTING UTILITIES

Where existing underground utilities or utility services lie within the cement-treated section, the Contractor shall verify, by potholing or other means acceptable to and approved by the Engineer, that there is sufficient cover over the utilities to provide clearance for the mixing process without damage to the existing utility facilities. This verification shall be carried out where each utility crosses the boundary of the cement-treated section, and at a minimum of one location in between. This shall not relieve the Contractor of conforming with all utility protection requirements contained elsewhere in the Contract Documents.

The Contractor shall be responsible for the protection of existing pipelines, manholes, catch basins, valve boxes, and other utility structures that are to remain within the work area. Any such utility facilities that are damaged from roadway excavation work performed by the Contractor shall be either repaired or replaced to the satisfaction of the Engineer at no cost to the City.

2.5 EQUIPMENT

The cement-treated section shall be constructed utilizing a combination of equipment that will produce results that meet all the requirements herein. The Engineer, prior to use, shall approve such machines.

Cement Spreader: The cement spreader shall be equipped with such instrumentation and control equipment to control spread rates over variable travel speeds. The operator shall demonstrate that the instrumentation and control equipment is calibrated and capable of controlling the spread rates within specifications.

Mixer: The mixing equipment shall be capable of mixing the full specified depth of cement treatment, leaving a relatively smooth plane at the bottom of the cement-treated section. Mixing equipment shall be equipped with a visible depth indicator showing the mixing depth, and odometer or footmeter to indicate travel speed, and a controllable water additive system for regulating water added to the mixture.

Compactors: When compacting cement treated sections greater than eight inches (8”), a sheepsfoot type compactor capable of compacting the entire section in conformance with the Contract Documents shall be used.

3.0 CONSTRUCTION

3.1 PREPARATION OF EXISTING ROADWAY

The existing asphalt concrete (AC) surfacing and the underlying base material shall be pulverized to a depth twice the thickness of the existing AC section or other depth as specified in Division 3, Special Provisions. When the thickness of the existing base section is less then the thickness of the existing AC section, the pulverized depth may be reduced per Engineer’s approval.

The pulverized materials shall be graded to conform to the lines and grade shown on the Plans prior to application of the cement. Grading operations will require some movement of material along the grade and/or off-hauled to conform to the lines and elevations shown on the Plans and to allow for the new asphalt concrete section.

At the contractor’s option, the existing AC section may be removed by other means, if contractor can demonstrate to the Engineer that preremoval of AC will still allow for new grade requirements to be met with remaining materials.

No more of the existing roadway sections shall be pulverized or removed in any Working Day than can be relayed as specified above in that Working Day. Pulverized material shall be temporarily compacted at the end of each day with a smooth drum roller, to allow for traffic.

3.2 PORTLAND CEMENT APPLICATION

The Portland cement shall be applied in one operation to the required width, grade, and cross section. Cement shall be evenly spread at the designated rate and shall not vary more than five percent (5%) on any area. Only a calibrated spreader able to provide a uniform distribution of the cement throughout the treatment area shall spread cement. The cement shall be added in a dry state and every precaution shall be taken to prevent dusting. Tailgate spreading of the cement will not be permitted. Tailgating is defined as having manual control of the spread rate, instead of automatic. The spreader truck shall demonstrate the ability to maintain a consistent spread rate over variable travel speeds. The Contractor will demonstrate the consistency of the spread rate by conducting a pan test. The pan test consists of placing a 3-square-foot pan on the grade in front of the spreader truck. After cement has been spread, the cement is weighed to determine the rate of spread in pounds per square foot. Truck tags will be used to verify amount of cement delivered to project. No traffic other than the mixing equipment or other related construction equipment will be allowed to pass over the exposed cement until after the mixing is complete.

Cement shall not be spread, mixed, or hydrated while the atmospheric temperature is below 35°F (1.67°C). At the Engineers discretion, processing will be allowed if temperature is rising.

3.3 MIXING AND HYDRATING

The depth of the cement treatment will be ten inches (10”) or other depths as specified in Division 3, Special Provisions. In areas where mixer can not access, such as around manholes or curbs, Contractor shall process the same day by pulling the material away from obstacles immediately after cement application and initial mixing. Material and cement shall be relayed to an area accessible to mixing equipment. Cement treatment can be conducted in one lift provided the Contractor can demonstrate that the spread rate, particle size, and compaction can be achieved. The mixer shall be capable of automatically adjusting itself to maintain a constant depth. On the initial mix, the water truck must have a solid connection to the mixer. The water shall be injected directly into the mixing chamber and shall produce a homogenous blend free from streaks or pockets of dry cement. Leakage of water from equipment will not be permitted. Care shall be exercised to avoid the addition of any excessive water.

When mixed material, exclusive of one inch or larger clods, is sprayed with phenolphthalein alcohol indicator solution and shows no color reaction it will be considered evidence of inadequate mixing.

Contractor is required to complete mixing and perform the initial compaction of the cement-treated section within 2 hours of initial hydration of cement.

3.4 COMPACTION

Maintain moisture above the optimum moisture content, but within allowable range as determined by the moisture/density relationship of the compaction curve. The cement-treated section shall be compacted to 95 percent of the maximum density as determined by ASTM 1557.

The maximum compacted thickness of a single layer may be any thickness the Contractor can demonstrate to the Engineer that its equipment and method of operation will provide the required compacted density throughout the cement-treated layer.

3.4.1 Initial Compaction

Contractor shall achieve the projects minimum compaction requirement during initial compaction operation. Lift thickness of 4 to 8 inches shall be by means of a steel-tired or pneumatic-tired roller. Lift thickness of 8 to 12 inches shall be compacted by means of a sheepsfoot compactor. Lift thickness greater than 12 inches shall be compacted by a sheepsfoot compactor with an open ring design to prevent bridging of the lower half of the cement-treated section. Areas inaccessible to rollers shall be compacted to the required compaction by other means satisfactory to the Engineer.

3.4.2 Surface Compaction

Surface compaction is defined as the upper 3 inches of the cement-treated section. Surface compaction shall be by means of steel-tired or pneumatic-tired roller. Areas inaccessible to rollers shall be compacted to the required compaction requirement by other means satisfactory to the Engineer.

3.5 FINAL GRADING

Surface compaction and finish grading shall proceed in such a manner as to produce, within 2 hours from initial compaction, a smooth, closely knit surface conforming to the crown, grade, and line indicated in the Contract Documents and without cracks, ridges, or loose material. Maintain moisture content on surface within allowable range during all grading procedures.

All excess material above the grade tolerance specified in the Contract Documents should be removed from the grade prior to final surface compaction of the cement-treated section. This excess material can be used in areas inaccessible to treatment equipment, provided the cement-treated material is used within the allotted time constraints.

The trimmed and completed surface shall be rolled with steel or pneumatic tired rollers. Minor indentations, as determined by the Engineer, may remain in the surface of the finished material as long as no loose material remains in the indentations.

3.6 CURING

After placement and compaction of the cement-treated section is completed, it shall be protected against drying and traffic for three (3) days. The Engineer, based on factors such as degree of traffic, temperature, and stability, may reduce the three (3) day cure period. Curing shall be moist (water fogging), bituminous seal, or other method approved by the Engineer. If moist curing is used, exposed surfaces of the cement-treated section shall be kept moist until covered. If a bituminous curing is used, it shall consist of liquid asphalt or emulsified asphalt meeting the requirements of Section 02037, Bituminous Seals.

The bituminous curing seal shall be applied in sufficient quantity to provide a continuous membrane over the soil at a rate of 0.45 to 0.90 L/m^2 (0.10 to 0.20 gallon per square yard) with the exact rate determined by the Engineer. It shall be applied as soon as possible after the completion of final rolling. The surface shall be kept moist until the seal is applied. At the time the bituminous material is applied, the soil surface shall be dense, free of all loose and extraneous material, and shall contain sufficient moisture to prevent excessive penetration of the bituminous material.

3.7 REPAIR

If the cement-treated section is damaged, it shall be repaired by removing and replacing the entire depth of affected layers in the damaged area. Feathering will not be permitted for repair of low areas.

4.0 MEASUREMENT AND PAYMENT

All work involved in preparing the existing material, furnishing and applying water, mixing, spreading, and compacting the cement-treated material, furnishing and applying the curing seal and other related work will be measured and paid by the square yard for Cement Stabilization.

The Contract price and payments shall include full compensation for furnishing all labor, materials, tools, equipment, and incidentals for doing all the work involved in constructing the cement-treated section, complete in place, as required by the Contract Documents and as directed by the Engineer.

END OF SECTION

SECTION 02037

BITUMINOUS SEALS

1.0 GENERAL

1.1 DESCRIPTION

This work shall consist of furnishing and applying Bituminous Seals on roadways, parking lots, and other surfaces in accordance with Section 37 of the Standard Specifications, except as indicated in the Contract Documents. The type of bituminous seal will be indicated in the Contract Documents. Refer to Subsection 1.6, Protection of Public and Private Property, and Subsection 1.16, Traffic Control, of Section 01500, Temporary Facilities and Controls, and Section 02007, Storm Water Pollution Prevention.

2.0 SLURRY SEAL

2.1 SCOPE

Slurry Seal shall consist of a mixture of Black Sand aggregate, latex emulsified asphalt, mineral filler and water properly proportioned, mixed and spread on a thoroughly cleaned surface or pavement as required in the Contract Documents or as directed by the Engineer. This item shall conform to Sections 37 and 94 of the Standard Specifications, insofar as they are applicable.

2.2 MATERIALS

A. ASPHALTIC EMULSION

Emulsified asphalt shall be a Polymer Modified Quick Setting Asphalt Emulsion (PMCQS1h), homogeneous, and show no separation after thorough mixing. Emulsified asphalt shall spread and set on the aggregate within five (5) minutes and be ready for cross-traffic within five (5) to thirty (30) minutes.

Asphaltic emulsion shall conform to the following requirements:

Test on Emulsion	Requirements	
	Min.	Max.
Viscosity, SSF @ 122º F	15	90
Storage Stability 1 day		1%
Sieve Test, % retained on No. 20 sieve		0.30
Particle Charge Test Positive: must meet pH requirement of 6.7 maximum (ASTM E70) if Particle Charge Test result is inconclusive.		
Residue by Distillation Test	57%	

Test on Residue from Distillation Test	Requirements	
	Min.	Max.
Penetration @ 25º C (77º F)	40	90
Ductility @ 25º C (77º F) mm		400
Solubility in trichloroethylene		97%
Polymer Content, % Calif. Test 401 (by weight)		2.5%

B. AGGREGATE

Aggregates shall be one hundred percent (100%) crushed with no rounded particles, volcanic in origin and black in color. The use of gray or light colored aggregates will not be allowed. The material shall be tough, durable, sound, and free from vegetable matter and other deleterious substances.

The percentage composition by weight of the aggregate shall conform to the following grading when determined by Test Method No. Calif. 202.

Percent Passing	
Sieve Size	Type II
3/8"	100
No. 4	90 -100
No. 8	65 - 90
No. 16	40 - 70
No. 30	25 - 50
No. 50	24 - 45
No. 200	5 – 15

C. MINERAL FILLER

The mineral filler shall be either Portland cement or other approved mineral fillers, if required. Portland cement (if used) shall be commercially available Type I-II and free of lumps and clods.

D. WATER

Water for use in asphaltic emulsions shall conform to Section 37-2.02B of the Standard Specifications. The source shall be approved by the Engineer. If water from the City's potable water supply is used, the contractor must obtain a portable water meter from the City Water and Sewer Utility and arrange payment for water used.

2.3 MIX DESIGN

The Contractor shall submit a mix design prepared and tested by a testing laboratory to the Engineer for review. The mix design and test results shall be submitted directly to the Engineer by the testing laboratory at least five (5) working days prior to the Contractor starting work. Once the Engineer reviews the mix design, the Engineer must approve any deviations.

Preliminary tests by the testing laboratory and tests made on samples as the slurry is placed shall have a Wet Track Abrasion test value of fifty (50) grams per square foot or less.

2.4 PREPARATION

Prior to the application of slurry seal, the traffic stripes and pavement markings shall be removed and the pavement shall be thoroughly cleaned using power sweepers and other cleaning methods necessary to remove all dirt, dust, leaves, weeds, grasses and other foreign material from the pavement. As part of this process, the area to receive slurry seal shall be cleaned thoroughly. The surface shall be inspected and approved by the Engineer prior to applying the slurry seal.

Following the application of slurry seal, any surface that is not to receive slurry seal shall be thoroughly cleaned if slurry seal has been tracked or over sprayed onto its surface.

The Contractor shall cover all grates, manholes, cleanouts, water and gas valve covers, monuments, electrical and communications hardware and other facilities located on or in the areas to receive the slurry seal prior to its application. After the slurry is applied, the contractor shall uncover all of the above facilities, breaking loose the covers and cleaning the facilities where the covers did not provide adequate protection.

Existing raised pavement markers shall be covered and protected prior to placing slurry. Raised pavement markers shall be covered only as far in advance of applying the slurry seal as is approved by the Engineer. The Contractor shall provide the Engineer with a list of streets with raised pavement markers and the approximate date of slurry prior to starting work. The schedule shall be updated as the work progresses. Covering the raised pavement markers with duct tape is acceptable. However, the Contractor shall remove any duct tape adhesive that remains on the raised pavement markers after the duct tape is removed. The Contractor shall expose the markers as soon as the slurry seal has set. The Contractor shall clean any raised pavement markers that have been coated with slurry.

2.5 MIXING, SPREADING AND PLACEMENT

The slurry seal shall be mixed in a continuous pug mill mixer. Rotating drum truck mixers shall not be used. Trucks shall be field calibrated during the first day's operation. Demonstration or calibration areas are to be determined by the Engineer.

The mixing machine shall be equipped with an approved fines feeder that provides an accurate metering device or method to introduce a pre-determined amount of mineral filler into the mixer at the same time and location that the aggregate is fed.

The type and amount of mineral filler and the final mix design shall be approved by the Engineer. The final mix design shall result in a mix that will set and can be opened to traffic in approximately four (4) hours from the time it is placed.

The surface shall be fogged with water directly preceding the spreader. The slurry mixture shall be of the desired consistency when applied to the surface. Total time of mixing shall not exceed four (4) minutes. A sufficient amount of slurry shall be carried in all parts of the spreader at all times so that complete coverage is obtained. No lumping, balling, or unmixed aggregate shall be permitted. No segregation of the emulsion and aggregate fines from the coarse aggregate shall be permitted. If coarse aggregate settles to the bottom of the mix, the slurry shall be removed from the pavement. No excessive breaking of the emulsion shall be allowed in the spreader box. No streaks such as caused by oversize aggregate shall be left on the finished pavement.

The slurry seal shall be placed at a rate to produce fifteen (15) pounds of aggregate per square yard.

The entire pavement, including the area around curb returns, shall be covered from lip of gutter to lip of gutter.

Excessive buildup and unsightly appearance shall not be permitted on longitudinal or transverse joint. Burlap drags shall be used. Approved squeegees shall be used to spread slurry in areas non-accessible to the slurry mixer. Care shall be exercised in not leaving unsightly appearance from handwork.

The Contractor shall finish roll the slurry seal surface that has an area of over 1,000 square feet with pneumatic tired rollers prior to opening to traffic. The entire surface shall be given one complete coverage roll, which shall begin as soon as possible after the setting and curing of the slurry seal. The Contractor shall control the speed of traffic with signage and other methods approved by the Engineer.

2.6 SWEEPING

All areas coated with new slurry seal shall be thoroughly swept one week after application. All loose material shall be collected and disposed of off-site. Cost for sweeping, collecting, and disposing of said material shall be included in the various items of work.

2.7 WEATHER LIMITATIONS

The slurry seal shall not be applied when either atmospheric or pavement temperature is 55º F and falling but may be applied when either the atmospheric or pavement temperature is 45º F and rising.

2.8 MEASUREMENT AND PAYMENT

All work involved in furnishing and installing Slurry Seal will be measured and paid for by the square yard of surface area on which Slurry Seal is applied unless otherwise specified in the Contract Documents.

Payment made at the bid price per unit of measure shall include full compensation for furnishing all labor, materials, tools, equipment, and incidentals, and for doing all the work involved in applying and finishing the slurry seal, complete in place. Payment shall include cleaning, protecting all street hardware and appurtenances, protecting raised pavement markers, sweeping one week after application, and protecting the seal until it has set, including the furnishing, placement, and removal of signs, barricades and providing other methods of protection as may be required.

3.0 FOG SEAL

3.1 SCOPE

Fog Seal shall consist of an application of a mixture of slow curing asphaltic emulsion and water. It shall be spread on a thoroughly clean surface or pavement as required in the Contract Documents or as directed by the Engineer. This item shall conform to Section 37 of the Standard Specifications, insofar as it is applicable.

3.2 MATERIALS

A. LIQUID ASPHALTS

Liquid asphalts shall be SC-70 or approved equal, in accordance with Section 93 of the Standard Specifications, diluted with water as required or as directed by the Engineer.

B. WATER

General Use

Water for cleaning shall be from the City's potable water system, the recycled water system, or another approved source. Prior to use of the City's potable water from hydrant or recycled water, the contractor must obtain a water meter from the City Water and Sewer Utility and arrange payment for water used.

Asphalt Emulsion

Water for use in asphaltic emulsions shall conform to Section 37-2.02B of the Standard Specifications. The source shall be approved by the Engineer.

3.3 CLEANING

Prior to the application of fog seal, the pavement shall be thoroughly cleaned using power sweepers and other cleaning methods necessary to remove all dirt, dust, leaves, weeds, grasses and other foreign material from the pavement. As part of this process, the streets shall be swept from curb to curb. The surface shall be inspected and approved by the Engineer prior to applying the fog seal.

Following the application of fog seal, any surface that is not to receive fog seal shall be thoroughly cleaned if fog seal has been tracked or over sprayed onto its surface.

3.4 APPLICATION

Application of the fog seal shall be 0.05 to 0.10 gallons per square yard of surface to be treated as directed by the Engineer, unless otherwise indicated in the Special Provisions.

The fog seal shall be applied so as to avoid raised pavement markers and traffic striping unless otherwise directed by the Engineer.

In no case shall a fog seal be applied when the atmospheric temperature is below forty degrees (40º) Fahrenheit.

3.5 MEASUREMENT AND PAYMENT

All work involved in furnishing and installing Fog Seal will be measured and paid for by the square yard of surface area on which Slurry Seal is applied unless otherwise specified in the bid proposal or in the Special Provisions.

Payment made at the bid price per unit of measure shall include full compensation for furnishing all labor, materials, tools, equipment, and incidentals, and for doing all the work involved in constructing the Fog Seal, complete in place. Payment shall include cleaning the street, preparation of the surface, furnishing and applying the asphaltic emulsion, protecting the newly sealed surface, providing traffic control and other incidental work as required.

4.0 CHIP SEAL

4.1 SCOPE

Chip Seal shall consist of an application of bituminous binder and a cover of mineral aggregate screenings, or if a double seal coat, two successive coats of binder and screenings shall be applied in accordance with the Contract Documents or as directed by the Engineer. This item shall conform to Section 37 of the Standard Specifications, unless otherwise indicated below.

4.2 MINERAL AGGREGATE

The percentage composition by mass of mineral aggregate screenings shall conform to one of the following gradings when determined by Test Method No. Calif. 202:

Percentage Passing				
Sieve Size	Coarse	Medium	Medium Fine	Fine
3/4”	100	---	---	---
1/2”	95-100	100	---	---
3/8”	50-80	90-100	100	100
No. 4	0-15	5-30	30-60	60-85
No. 8	0-5	0-10	0-15	0-25
No. 16	---	0-5	0-5	0-5
No. 30	---	---	0-3	0-3
No. 200	0-2	0-2	0-2	0-2

The other provisions in Section 37-1.02 of the Standard Specifications shall apply except as follows: Should the results of aggregate screening not meet the gradation specified, the chip seal represented by such test shall be removed. The penalty payment under section 37-1.02 shall not apply.

4.3 MAINTAINING TRAFFIC

In lieu of Section 37-1.03 of the Standard Specifications, Traffic Control shall be in accordance with Subsection 1.16, Traffic Control, of Section 01500, Temporary Facilities and Controls, and other provisions of the Contract Documents.

4.4 APPLYING ASPHALT EMULSION

Applying asphaltic emulsion shall comply with Section 37-1.05 of the Standard Specifications except as provided below.

The application rate for asphaltic emulsion except for fog seal shall be as follows:

Seal Coat Types	Range
Fine	3.2 to 6.4
Medium Fine	5.0 to 7.2
Medium	5.0 to 8.1
Coarse	6.4 to 8.1
Double	
1st Application	4.1 to 7.2
2nd Application	4.1 to 6.4

Asphaltic emulsion at the time of application shall be between 130 and 175 degrees Fahrenheit.

Asphaltic emulsion shall not be applied when weather conditions are unsuitable. Seal coats requiring screenings shall not be applied until atmospheric temperature is below 68 degrees Fahrenheit or above 105 degrees Fahrenheit or when the pavement temperature is below 77 degrees Fahrenheit.

That portion of section 37-1.05 dealing with Engineer notification of the Contractor concerning the suitability of the next working day for work shall not apply.

4.5 SPREADING SCREENINGS

Spreading screenings shall comply with Section 37-1.06 of the Standard Specifications except as provided below.

The spread rate of screenings for the various types of seal coats shall be within the following ranges in pounds per square yard.

Seal Coat Types	Range
Fine	12 to 20
Medium Fine	16 to 25
Medium	20 to 30
Coarse	23 to 30
Double	
1st Application	23 to 30
2nd Application	12 to 20

4.6 FINISHING

Finishing shall comply with Section 37-1.07 of the Standard Specifications except that excess screenings shall be the property of the Contractor and shall be removed and disposed of at Contractor's expense and at a location of Contractor's choosing in compliance with all applicable laws and requirements. The provisions of 7-1.13 of the Standard Specifications shall not apply.

5.0 MEASUREMENT AND PAYMENT

In lieu of Sections 37-1.08 and 37-1.09, the following shall apply for Measurement and Payment. All work involved in furnishing and installing Chip Seal will be measured and paid for by the square yard of surface area on which Chip Seal is applied unless otherwise specified in the Contract Documents.

Payment made at the bid price per unit of measure shall include full compensation for furnishing all labor, materials, tools, equipment, and incidentals, and for doing all the work involved in constructing the Chip Seal, complete in place. Payment shall include cleaning, furnishing and mixing water with asphaltic emulsion, furnishing and placing prime coat, applying the asphaltic emulsion and the screenings, rolling the screenings, removing all excess materials and curing and protecting the ship seal until it has set, including furnishing traffic control and the furnishing, placement, and removal of signage and barricades as may be required.

END OF SECTION

SECTION 02039

ASPHALTIC CONCRETE PAVEMENT, RESURFACING, AND BERMS

1.0 GENERAL

1.1 DESCRIPTION

This work shall consist of furnishing and placing asphaltic concrete pavement for use in pavement, resurfacing of existing pavement, pavement repair and the construction of berms. The work includes mixing aggregate and asphalt binder at a central mixing plant, spreading and compacting the mixture, and furnishing and applying prime coat, tack coat and, when required, pavement reinforcing fabric, upon a prepared roadbed, base or over existing pavement, to the lines, grades, and dimensions shown in the Contract Documents. This item shall conform to Section 39 of the Standard Specifications, insofar as it is applicable. Refer to Subsection 1.6, Protection of Public and Private Property, and Subsection 1.16, Traffic Control, of Section 01500, Temporary Facilities and Controls, and Section 02007, Storm Water Pollution Prevention.

2.0 MATERIALS

2.1 PRIME COAT

The prime coat shall consist of liquid asphalt SC-70 conforming to Section 93 of the Standard Specifications, and spread at the rate of 0.25 gallons per square yard of surface. Prior to placement of asphaltic concrete, the prime coat shall have attained a minimum penetration of one-quarter (1/4") inch. Paving over areas where puddling of excess un-penetrated prime coat exists shall not be allowed. Immediately in advance of placing asphaltic concrete, additional prime coat shall be applied as directed by the Engineer to areas where the prime coat has been destroyed and no additional compensation shall be allowed for this work. A sand blotter shall be applied in specific locations to the prime coat as directed by the Engineer in order to maintain vehicular and/or pedestrian traffic.

2.2 PAINT BINDER (TACK COAT)

Paint Binder (Tack Coat) shall be asphaltic emulsion RS1 conforming to Section 94 of the Standard Specifications and its application shall conform to Subsection 39-4.02 of the Standard Specifications.

2.3 MINERAL AGGREGATE

Course aggregate shall be clean, hard, tough, durable and sound. It shall be of a uniform nature and free from organic impurities or other deleterious substances. Fine aggregate shall consist of hard, durable, and sound sand. Separation of the natural material passing the No. 4 sieve from the crushed material passing the No. 4 sieve is NOT required.

When the combined grading of the course and fine aggregates is deficient in material passing the No. 200 sieve, a commercial filler may be added in conformance with Subsection 39-3.03 of the Standard Specifications.

The combined mineral aggregate shall be of such size that the percentage composition by weight, as determined by laboratory sieves, shall conform to the following gradation when determined by Test Method No. Calif. 202:

Sieve Size	Base Course 3/4" Maximum	Surface Course 1/2" Maximum
1"	100	- - -
3/4"	95 - 100	100
1/2"	75 - 90	95 - 100
3/8"	65 - 80	80 - 95
No. 4	45 - 60	55 - 72
No. 8	30 - 45	38 - 55
No. 30	20 - 30	20 - 35
No. 200	3 - 7	4 - 9

2.4 ASPHALT

Bituminous binder shall be Performance Grade PG 70-10 asphalt conforming to Section 92 of the Standard Specifications. Certification of the above shall be furnished to the Engineer.

The exact amount of asphalt binder shall be determined as provided in Section 39-2.01 of the Standard Specifications except that the Contractor shall determine the quantity of asphalt binder per Calf. 367 and submit the mix design to the Engineer for approval.

2.5 PAVEMENT REINFORCING FABRIC AND ASPHALT BINDER

Pavement Reinforcing Fabric shall be placed at locations required by the Contract Documents and as required by the Engineer. Pavement reinforcing fabric shall be non-woven, bonded polypropylene-nylon, needle punched, thermally bonded on one side materials conforming to the following when tested in conformance with the listed ASTM Designation or AASHTO M288-96:

Specification	Requirement
Weight, Oz./S.Y., ASTM D3776	4.1 Min.
Grab tensile strength in pounds, ASTM D4632	101 Min.
Elongation at break in percent, ASTM D4632	50 Min.
Fabric Thickness in mils, ASTM D461	30 to 100
Mullen burst strength in psi, ASTM D3786	200
Asphalt retention of fabric in gal/sy	0.25
ASTM D6140, oz./sy	26.9

The Contractor shall submit material certificate for pavement reinforcing fabric at the Preconstruction Conference for approval. If there is no Preconstruction Conference, the Contractor shall submit certification at least three (3) working days before initial placement of this material.

The fabric shall be protected from exposure to ultraviolet rays until placed.

2.6 PAVEMENT REINFORCING GRID

Pavement reinforcing grid shall be furnished and placed at all locations required by the Contract Documents and as directed by the Engineer. Pavement reinforcing grid shall be a self adhesive, grid and conform to the following:

Specification	Requirement
Tensile strength, pounds per square inch, width and length.	1000 lbs./inch (minimum)
Elongation at break, percent maximum.	5%
Melting point, degrees Fahrenheit	425
Adhesive Backing	Pressure Sensitive
Grid Size	1 inch x 1 inch

The Contractor shall submit material certificate and manufacturer's instructions for pavement reinforcing grid at the Preconstruction Conference to the Engineer for approval. If there is no Preconstruction Conference, submit required documents at least three (3) working days prior to initial placements.

2.7 BITUMINOUS SEALS

Bituminous Seals shall conform to Section 02037, Bituminous Seals, and shall be of the type designated in the Contract Documents.

2.8 MISCELLANEOUS PORTLAND CEMENT CONCRETE

Miscellaneous Portland cement concrete is used for adjusting manholes and monuments where necessary. Miscellaneous Portland cement concrete shall be as provided in Subsection 2.2, Sanitary Sewer Structures, of Section 02070, Storm Sanitary Sewer Manholes, Drainage Structures, and Miscellaneous Structures, except that combined aggregate grading of 1 inch maximum shall be used.

2.9 MORTAR

Cement Mortar used in raising manholes and similar structures shall be composed of one part Portland cement and two (2) parts sand by volume. Sand shall be well graded and sized to all pass a #8 sieve. The materials shall be mixed to a consistency suitable for the purpose intended. Mortar shall be used within thirty (30) minutes after the mixing water has been added. Cement mortar shall achieve a minimum compressive strength of 2,000 psi in twenty-eight (28) days. The design of the cement mortar mix is subject to the approval of the Engineer.

2.10 WATER

Water for use in asphaltic emulsions shall conform to Section 37-2.02B of the Standard Specifications. The source shall be approved by the Engineer. If water from the City's potable water supply is used, the contractor must obtain a portable water meter from the City Water and Sewer Utility and arrange payment for water used.

Water for use in concrete and mortar mixes shall conform to Section 90-2.03 of the Standard Specifications. To use the City's potable water, the contractor must obtain a portable water meter from the City Water and Sewer Utility and arrange payment for water used.

3.0 ASPHALTIC CONCRETE PAVEMENT

3.1 SPREADING AND COMPACTING

Spreading and compacting of all mixtures shall conform to Subsection 39-6 of the Standard Specifications, except as indicated below or in the Contract Documents.

A. SPREADING

All Asphaltic Pavement shall be placed with self-propelled mechanical spreading asphalt paving machines with a screed and finishing equipment. The paving machine shall be of the type in which asphalt is delivered from trucks into the paving machine. Pick-up machines shall not be allowed without written approval of the Engineer. Truck drawn portable asphalt spreaders may be used in certain areas providing prior approval is granted by the Engineer.

All asphaltic paving materials delivered for paving streets, drives, alleys and other public ways shall be accompanied with an official weight tag from the asphalt plant, with each load. All costs for furnishing weight tags shall be included in the cost of Asphaltic Pavement.

Asphaltic Pavement shall be spread and compacted in layers not to exceed two (2) inches on any surface course and shall not exceed three (3) inches on any non-surface course unless provided for in the Contract Documents. Asphaltic Pavement shall be placed to the minimum thickness required by the Contract Documents in as many lifts as required to meet the above thickness requirements. All mixtures, except open graded mixture, shall be spread at a temperature of not less than 225 degrees Fahrenheit and all initial rolling and tamping shall be performed when the temperature of the mixture is such that the sum of the air temperature plus the temperature of the mixture is between 280 degrees Fahrenheit and 375 degrees Fahrenheit. Open graded mixture shall be spread at a temperature suitable for workability. Edges shall be feathered when directed by the Engineer. A feathered edge is considered incidental and therefore no extra payment will be made.

All mixtures shall be placed only when the atmospheric temperature is above 50 degrees Fahrenheit.

No extra pay shall be allowed for cooling the asphaltic concrete with water.

The Contractor shall seal and sand all conforms and edges where pavement is feathered to meet grade.

B. COMPACTING

Pneumatic-tire rolling shall be required only when so stated in the Special Provisions.

Initial or breakdown rolling shall consists of one complete coverage of asphalt mixtures and shall be performed with a tandem or a three-wheel roller. Such roller shall weigh not less than 12 tons, unless otherwise permitted by the Engineer.

In all other respects, spreading and compacting of all mixtures shall conform to Sub-section 39-6, Spreading and Compacting, of the Standard Specifications.

3.2 ADJUSTMENT OF WATER VALVE BOXES

On new street construction or multiple course overlay of an existing street: Prior to the placement of the surface course of asphaltic pavement, water valve boxes will be raised to the elevation of the top of the base course. After the base course has been completed and before work on the surface course is commenced, the Contractor shall supply and place pre-cast rings on the valve boxes before starting the surface course. The rings will be of the proper thickness to raise the valve box to finished grade. The boxes shall be raised prior to priming. The Contractor shall be required to make any adjustments necessary for proper elevation of valve boxes. On single course overlay only: Buried water valves or those deemed by the engineer to be noticeably out of plain with the future finish grade shall have the box adjusted. All shall have adjustment rings installed per this section 3.2.

3.3 ADJUSTMENT OF MANHOLES

A. DESCRIPTION

Storm drain and sanitary sewer manholes shall be constructed to the taper (cone) section. The manholes shall be covered with a temporary steel plate that is safe for traffic and does not allow dirt and debris to enter the pipe system. After the placement of the final lift of pavement, the manholes shall be brought to finish grade, installing the manhole frame and cover in accordance with the Standard Details and the Contract Documents. Comply with the provisions of Subsection 5.10 of this Section 02039 for Manhole Alteration insofar as they are applicable.

B. OTHER UTILITY MANHOLES

Manholes for other utilities such as Silicon Valley Power, PG&E, AT&T, Pacific Bell, etc., shall be raised after the final lift of pavement, by others. The Contractor shall locate and tie-out these facilities prior to paving. The Contractor shall pave over these facilities and remove a five (5”) inch diameter plug of asphaltic concrete from each manhole in order that the utility can locate the manhole later.

C. TOLERANCE

The grade tolerance for adjusting all manholes and other facilities in the road shall be a maximum of 1/8 inch above to ¼ inch below the finished grade of the final lift of asphaltic concrete. The adjusted manhole frame shall be firmly and uniformly supported using solid, durable material so that no rocking of the assembly occurs.

3.4 TESTING

A. TESTING AND CORING

Testing shall conform to the requirements of Sections 39 and 92 of the Standard Specifications.

B. FINISHED SURFACE

The smoothness of the finished pavement surface shall meet the requirements of Section 39-6.03 of the Standard Specifications.

C. REJECTION

Any and all materials and work not conforming to the above requirements shall be corrected in a manner satisfactory to the Engineer or shall be removed from the job site at the expense of the Contractor, said material to be replaced with new material, at no cost to the City, conforming to the above requirements to the satisfaction of the Engineer.

3.5 MEASUREMENT AND PAYMENT

Section 39-8, Measurement and Payment of the Standard Specifications shall not apply. All work involved in furnishing and constructing asphaltic concrete, including asphaltic concrete, prime coat and paint binder (tack coat), adjusting manholes, flush inlets, water valve boxes, and incidentals will be measured and paid for by the ton of asphaltic concrete, complete in place, unless otherwise specified in the Contract Documents.

Payment made at the bid price per unit of measure shall include full compensation for furnishing all labor, materials, tools, equipment, and incidentals, and for doing all the work involved in constructing the asphaltic concrete pavement and placing the pavement reinforcing fabric or pavement reinforcing grid, complete in place, as required by the Contract Documents and as directed by the Engineer.

4.0 ASPHALTIC CONCRETE PAVEMENT REPAIR

4.1 REPAIR OF POTHOLES

Wherever potholes appear in the area to be resurfaced or otherwise repaired, the loose material shall be removed, the asphalt pavement cut, and the sub-grade compacted so as to result in a neat, rectangular shaped area. The hole is to be painted with a paint binder (tack coat) of Grade AR 4000 paving asphalt immediately prior to placing the asphaltic concrete plug. The plug of asphaltic concrete material shall be compacted thoroughly in place, in a manner approved by the Engineer.

4.2 MEASUREMENT AND PAYMENT

Payment for Repair of Potholes will be per ton of asphalt concrete placed and shall include full compensation for all work involved in repairing the pothole and for furnishing all labor, materials, tools, equipment, and incidentals, and for doing all the work involved, complete in place, as required by the Contract Documents and as directed by the Engineer.

5.0 ASPHALTIC CONCRETE PAVEMENT RESURFACING

5.1 GENERAL

Asphaltic concrete pavement resurfacing shall consist of placing an overlay of asphaltic concrete of a specified thickness over existing pavement. The work may include repair of failed pavement; application of an asphaltic concrete leveling course; cold milling of existing pavement; application of pavement reinforcing fabric or grid; adjusting of water valve boxes, manholes and monuments; applying a layer of asphaltic concrete; applying seal coat; pre-marking and striping the street for traffic, bicyclists and pedestrians; and performing all cleanup before and after paving including removal of pavement markers, weeds and other deleterious material; and other work necessary to provide a quality finished pavement.

5.2 MATERIALS

Asphaltic concrete pavement materials shall be as specified in Subsection 2.0, Materials, of this Section 02039 and Section 39 of the Standard Specifications, as applicable. Asphaltic concrete pavement for the leveling course shall be: base course using one-half (1/2”) or three-fourths (3/4”) inch maximum size aggregate as directed by the Engineer. The final resurfacing course shall be one-half (1/2”) inch maximum aggregate.

5.3 COLD MILLING PAVEMENT

Cold milling of pavement shall be performed where designated in the Contract Documents. Cold milling shall remove variable depths of pavement, as indicated, to provide an overlay key at joints, adjacent to gutters and over the width of the area to be cold milled. The surface of pavement after milling shall be uniformly rough grooved or ridged as directed by the Engineer. The Contractor shall remove existing asphalt concrete overlay from gutters adjacent to any area to be cold milled, as directed by the Engineer.

A. EQUIPMENT

The machine used for milling shall be specially designed and built for milling of bituminous pavements without the addition of heat, with the ability to plane Portland concrete areas. The cutting drum shall be a minimum of sixty (60”) inches wide and shall be equipped with carbide-tipped cutting teeth placed in a variable lacing pattern to produce the desired finish. The machine shall be capable of being operated at speeds from 0 to 40 feet per minute. It shall be self-propelled and have the capability of spraying water at the cutting drum to minimize dust. The machine shall be capable of removing the material next to the gutter of the pavement being reconditioned and be designed so that the operator can at all times observe the milling operation without leaving the controls. The machine shall be adjustable for slope and depth and shall deep cut in one pass a maximum of three (3”) inches without producing fumes or smoke.

B. REMOVAL AND DISPOSAL OF MATERIAL

During the milling operation, the contractor shall remove loosened material from the project site, using mechanical equipment and thoroughly sweeping the street to remove any remaining material and dust. The removal crew shall follow within fifty (50’) feet of the milling machine unless otherwise directed by the Engineer. The Contractor shall take all necessary measures to avoid dispersion of dust. All material removed shall be considered the property of the Contractor and shall be disposed of by the Contractor at its expense.

C. TRAFFIC SIGNAL LOOP DETECTORS

Before cold milling pavement within three hundred (300’) feet of a traffic signal, the Contractor shall notify the City at least seven (7) working days prior to commencing work within said area. Upon notification, the City will mark the location of all existing loop detectors. The Contractor shall not cold mill within twelve (12”) inches of loop detector conductors or advanced loop detectors.

Damage to existing loops caused by the Contractor's operation will require replacement of the loops in their entirety by qualified workers at the Contractor's expense within seven (7) days of when the damage occurred.

D. TRANSITIONS

Milled joints that are transverse to traffic and in excess of one-half (1/2") inch in height shall be ramped with temporary asphalt concrete pavement. The ramp shall be configured so that the slope is approximately 1:12. Temporary asphaltic concrete ramps shall be placed adjacent to curb ramps for the disabled. Temporary asphaltic concrete ramps shall be installed the same day as cold milling and removed the same day as permanent paving. The Engineer shall approve transition asphaltic concrete ramp dimensions.

5.4 ASPHALTIC CONCRETE LEVELING COURSE

An Asphalt Concrete Leveling Course shall be applied where indicated on the plans or where directed by the Engineer. The purpose of the leveling course is to build up the pavement thickness so that the final lift of pavement will be of uniform thickness resulting in a finished surface that is smooth, has good ride-ability and is well draining and free from ruts, humps, depressions and irregularities. Asphaltic concrete for the leveling course shall be: base course using one-half (1/2") or three-fourths (3/4") inch maximum size aggregate, as directed by the Engineer and as provided in Subsection 2.0, Materials, of this Section 02039. Paint binder (tack coat) shall be applied to areas to receive the leveling course. Application of the leveling course shall be as shown in the Contract Documents or as directed by the Engineer.

5.5 ADJUSTING WATER VALVE BOXES

On existing pavements where resurfacing is to be constructed, water valve boxes shall be adjusted by the Contractor. Prior to paving, the Contractor shall install one or more adjusting rings on the valve box to bring it to the finished pavement grade and tie-out each water valve box as specified in Subsection 5.10 of this Section 02039. Because of localized deflections in the pavement, the adjustment ring or rings may not be the same height as the nominal pavement thickness.

Where the resurfacing or capping is done in two lifts, rings shall be placed on valve boxes to the proper elevation in advance of the construction for each lift.

It is important that City crews have access to water valves at all times in case of an emergency.

The City will furnish the adjusting rings for Contractor to install. Contractor shall coordinate with the Engineer when Contractor is ready to pick-up the adjusting rings. Payment for handling and installing adjusting rings is included in the payment for Pavement Resurfacing.

5.6 PREPARATION

Prior to installing asphaltic concrete leveling course, pavement reinforcing fabric, pavement reinforcing grid or resurfacing, all raised pavement markers and thermo plastic pavement markings shall be removed and the surface shall be thoroughly cleaned of dirt, debris, sand, gravel, leaves and other deleterious material. Any weeds or vegetation existing in cracks in the pavement or at the edges of gutters or other surfaces shall be removed.

Whenever asphaltic paving material is being placed on existing pavement, a tack coat of asphaltic emulsion shall be applied to all surfaces prior to resurfacing work, in the manner prescribed in Subsection 39-4.02 of the Standard Specifications.

5.7 PAVEMENT REINFORCING FABRIC

Asphalt binder for pavement reinforcing fabric shall conform to Section 92 of the Standard Specifications and shall be Performance Grade PG 70-10. Asphalt binder for pavement reinforcing fabric shall be applied at an approximate rate of 0.25 gallon minimum per square yard of surface covered. The exact rate of application shall be determined by the Engineer. The width of the asphalt binder spread shall be the width of the fabric mat plus three (3) inches on each side. Area of wedge cut shall be sprayed at a rate of 0.05 gallon per square yard first, followed by the full width spraying or 0.25 gallon per square yard, or as directed by the Engineer.

The fabric shall be stretched, aligned, and placed on the pavement surface with the smooth thermally bonded side up, and with no wrinkles that lap. The test for lapping shall be made by gathering together the fabric in a wrinkle. If the height of the doubled portion of extra fabric is one-half (1/2”) inch or more, the fabric shall be cut to remove the wrinkle, then lapped in the direction of paving. Should the height of the doubled portion exceed two (2) inches, it shall be cut back to two (2) inches, then lapped in the direction of paving. For straight sections of roadway, no more than one fabric cut in thirty (30) linear feet of fabric laid will be allowed. For curved sections, the interval shall be ten (10) feet.

All areas that will receive asphaltic concrete will also have fabric installed when required by the Construction Documents or by the Engineer. These areas will include all conform areas, such as wedges at intersections and at lip of concrete gutters. Manual lay down methods shall be used only for irregular areas that are to be paved. The fabric shall be unrolled, stretched, aligned, and placed in increments of approximately thirty (30) feet.

Adjacent borders of the fabric shall be lapped two (2”) to four (4”) inches. The preceding roll shall lap two (2”) to four (4”) inches over the following roll in the direction of paving at ends of rolls or at any break. At fabric overlays, both the binder and the fabric shall overlap the previously placed fabric by the same amount.

Seating of the fabric with rolling equipment after placing shall be permitted. Turning of the paving machine and other vehicles shall be gradual and kept to a minimum to avoid damage.

A small quantity of asphalt concrete, to be determined by the Engineer, may be spread over the fabric immediately in advance of placing asphalt concrete surfacing in order to prevent fabric from being picked up by construction equipment. If bleeding of asphalt binder through reinforcing fabric occurs, the Contractor shall spread a thin layer of asphalt concrete on all reinforcing fabric in place.

Public traffic shall not be allowed on the bare reinforcing fabric, except that public cross traffic shall be allowed to cross the fabric, under traffic control, after the Contractor has taken every effort to prevent the fabric from being displaced.

Care shall be taken to avoid tracking binder material onto the pavement reinforcing fabric or distorting the fabric during seating of the fabric with rolling equipment. If necessary, exposed binder material shall be covered lightly with sand.

5.8 PAVEMENT REINFORCING GRID

After cleaning and drying the surface, a tack coat of Performance Grade PG 70-10 asphalt conforming with Section 92 of the Standard Specifications followed by a leveling course of asphalt concrete shall be placed as required. Asphalt concrete leveling course shall conform to Subsection 5.4, Asphalt Concrete Leveling Course, of this Section 02039.

Pavement reinforcing grid shall be placed on the leveling course to the width determined by the Engineer. Placement of the pavement reinforcing grid, including longitudinal and transverse overlap limits, shall be in accordance with the manufacturers recommendations. The pavement surface temperature shall not be greater than 140 degrees Fahrenheit when placing the pavement reinforcing grid unless approved by the Engineer. The grid shall be laid by mechanical means or by hand with sufficient tension to eliminate wrinkles.

The pavement reinforcing grid and asphaltic binder may be rubber tire rolled sufficiently to activate the adhesive and to adhere the grid to the pavement surface. The reinforcing grid shall be paved with asphalt concrete on the same day it is installed.

All work shall be done in accordance with the manufacturer’s specification.

5.9 SPREADING AND COMPACTING

Spreading and Compacting shall be in accordance with Subsection 3.1, Spreading and Compacting, of this Section 02039. The Contractor shall seal and sand all conforms and edges where pavement is feathered to meet grade.

5.10 MANHOLE ALTERATION

The Contractor shall raise or lower manholes, flushing inlets, and catch basins not at finished grade in conformance with the Standard Details and the Contract Documents. Unless otherwise indicated in the Contract Documents, the Contractor shall properly locate and tied off to a minimum of two (2) locations for triangulation all manholes, flushing inlets, and catch basins within the project area in advance of paving operations to the satisfaction of the Engineer. Markings shall be done by semi-permanent marks of paint/ink on the concrete gutter surface nearest to the manhole, flushing inlet, or catch basin being marked. Where concrete gutter does not exist, markings shall be done as directed by the Engineer.

Openings of these facilities shall be covered and made safe for the public use of the roadway.

Where the existing frame base, frame and/or cover is judged unserviceable by the Engineer or where adjustable grade extension rings are discovered, replacement units will be provided to the Contractor by the City, at the City Corporation Yard, 1507 Martin Avenue. The handling of these units shall be considered incidental work and included in the payment for other items of work involved and no additional compensation will be allowed.

On pre-cast manholes, the Contractor shall raise or lower the manhole frame and cover by adding or removing pre-cast concrete grade rings and grouting the manhole frame to proper grade.

On brick manholes, the Contractor shall raise or lower the manhole frame and cover by adding or removing the proper courses of brick and grouting the manhole frame to the proper grade. Care shall be exercised when lowering a manhole that the top of the manhole is finished to the proper diameter so that the frame shall have sufficient bearing. Blocking the frame up with wood or similar material shall not be allowed. All work shall be done as directed by the Engineer.

Because of the damage to vehicles using public streets and the inconvenience to the public caused by incomplete street work, the City will not tolerate procrastination between adjustment stages in adjusting units to grade. Once the pavement is cut and work begun, the work must be properly scheduled and diligently prosecuted so that each unit is complete to its new grade, paving in place and barricades removed (no barricading overnight), all within a two (2) Working Day period from the commencement of work in the vicinity of each unit to be adjusted. At no time shall there be a drop off greater than 0.1' (one-tenth of a foot) in the pavement overnight.

As a matter of public safety, the Contractor shall ensure that manhole, valve box, flush inlet, and other covers are installed on their rings anytime the opening is left unattended.

5.11 ADJUSTMENT OF SURVEY MONUMENT BOXES

Survey monument boxes shall be adjusted to grade prior to resurfacing if the monument has a standard box and cover and adjustment can be made with an adjustment ring. Where a monument does not have a box or where an old style square box exists, a box shall be installed after the paving operation in accordance with the Standard Drawings. Care shall be used in working with survey monuments since they are controlled by the State of California Land Surveyor's Act. Damaged monuments that need to be replaced will need to be resurveyed by a Licensed Land Surveyor and appropriate documentation filed with the County Recorder at the expense of the contractor.

5.12 MEASUREMENT AND PAYMENT

All work involved in furnishing and constructing Asphaltic Pavement Resurfacing will be measured and paid for by the ton of material, complete in place and includes preparation, adjustment of water valves and cleanup, unless otherwise specified in the contract Documents.

Cold milling of pavement will be measured by the linear foot along the edge of milled joint or by the square foot as provided for in the Contract Documents.

Asphaltic Leveling Course will be paid for by the ton of material in place and includes all preparation work and the application of paint binder (tack coat).

All work involved in furnishing and constructing pavement reinforcing fabric, will be measured and paid for by the square yard with the asphaltic binder measured and paid for by the actual pounds of binder applied (8.51 pounds per gallon at 60 degrees Fahrenheit). All work involved in furnishing and constructing pavement reinforcing grid, including the grid and binder will be measured and paid for by the square yard.

Manhole Alteration and Adjustment of Survey Monuments Boxes will be measured and paid for by the unit, unless otherwise specified in the Contract Documents. In all other cases, the above will be considered incidental and will be considered as included in the other items of work.

Payment made at the bid prices per unit of measure for the above shall include full compensation for furnishing all labor, materials, tools, equipment, and incidentals, and for doing all the work involved, complete in place, as required by the Contract Documents and as directed by the Engineer.

6.0 ASPHALTIC CONCRETE DIKES

Asphaltic Concrete dikes shall be shaped and compacted with an extrusion machine or other equipment capable of shaping and compacting the material to the required lines, grades and cross section.

6.1 MATERIAL

The combined aggregate grading for asphaltic concrete for use in dikes shall be Surface Course, one-half (1/2”) inch maximum size aggregate, as specified in Subsection 2.0, Materials, of this Section 02039 . The amount of asphalt binder used for asphaltic concrete berms shall not be less than eight percent (8%) by weight of the aggregate unless otherwise indicated in the Contract Documents.

6.2 MEASUREMENT AND PAYMENT

Payment for Asphaltic Concrete Dikes shall be per lineal foot in place and shall include full compensation for furnishing all labor, materials, tools, equipment, and incidentals, and for doing all the work involved, complete in place, as required by the Contract Documents and as directed by the Engineer.

END OF SECTION

THIS PAGE
WAS INTENTIONALLY
LEFT BLANK

SECTION 02040

PORTLAND CEMENT CONCRETE PAVEMENT

1.0 GENERAL

1.1 DESCRIPTION

This work shall consist of constructing Portland cement concrete pavement on a prepared subgrade as required in the Contract Documents.

This work shall conform to Section 40 of the Standard Specifications except as specifically modified by the Contract Documents.

2.0 JOINTS

A contact joint (per City Standard Details) shall be placed at the lip of gutter, two (2') feet from the face of curb or to match the existing lip of gutter as determined by the Engineer, unless otherwise indicated and at such other points between the lips of gutters as shall be required in the Contract Documents or as determined by the Engineer.

Transverse weakened plane joints shall be placed as required in the Contract Documents or as determined by the Engineer.

3.0 PAVEMENT THICKNESS

Thickness of Portland Cement Concrete Pavement shall be as shown in the Contract Documents.

4.0 MEASUREMENT AND PAYMENT

Payment for this item shall be per square foot installed complete and in place. Full compensation for transverse weakened plane joints and contact joints will be considered as included in the contract price paid per square foot for Portland Cement Concrete Pavement and no additional compensation will be allowed therefore.

END OF SECTION

THIS PAGE
WAS INTENTIONALLY
LEFT BLANK

SECTION 02050

DEMOLITION

PART 1 GENERAL

1.1 SUMMARY

A. Section includes (but is not necessarily limited to):
   1. Demolition and removal of existing improvements as indicated on the Drawings
   2. Requirements for addressing complaints received by the Contractor.

B. Full compensation for conforming to the requirements of this Section shall be considered as included in the Contract Lump Sum Price and no additional compensation will be allowed therefore.

C. Information for the Contractor's use in preparing the demolition plan is provided in this Section.

1.2 REFERENCE STANDARDS

A. California Health and Safety Code

1.3 RELATED SECTIONS

A. Section 02019 – Earthwork

1.4 DEMOLITION PLAN

A. The Contractor shall submit a complete demolition plan to the City's representative detailing procedures and sequence of the work including traffic signing, salvage, disposal, and material handling.

B. The Contractor shall thoroughly investigate the existing conditions at the site before proceeding with the demolition plan.

C. The demolition plan shall consist of the following:
   1. The removal sequence for all items.
   2. Equipment locations during removal operations.
   3. Temporary support shoring or temporary bracing, if necessary.
   4. Details and locations of shields or other protective measures in sufficient numbers to assure that people, property and improvements will not be endangered.
   5. Items designated for salvage and date when and location where salvaged items will be delivered.
   6. Items designated for disposal and location where disposed items will be transported.

D. Approval by the City's representative of the demolition plan or field inspection performed by the City's representative will in no way relieve the Contractor of full responsibility for the demolition plan and procedure.

1.5 PROJECT CONDITIONS

A. Special care shall be exercised to protect the finishes of existing paving and other items to remain.
   1. Damage or disturbance to the existing pavement, curbs, sidewalks or other existing services shall be promptly restored, repaired, or replaced to match the existing condition at no additional cost to the City.
   2. If the Contractor has any question as to the extent of items to remain, he shall notify the City's representative and request clarification before proceeding.

B. Damage: Promptly repair damage caused by demolition operations to existing facilities to remain and adjacent facilities as directed by the City's representative and at no additional cost to the City. If the finished surface of the asphalt concrete on existing City streets is damaged, including by direct operations, haul trucks, movement of construction equipment, or other Contractor actions, then it shall be repaired to the satisfaction of the City and the City's representative. Corrective work shall be at the Contractor's expense.

1.6 TRAFFIC

A. The following additional requirements apply to the work that may require closing roadways to traffic for only brief periods of time.
   1. The closure of roadways to public traffic shall conform to the applicable requirements of City Standard Specifications.
   2. Conduct demolition operations and the removal of debris to ensure minimum interference with streets, walks, and other adjacent occupied or used facilities.
   3. Do not close or obstruct streets, walks, or other occupied or used facilities except to the extent indicated on the Drawings.
   4. Prior to closing a roadway to traffic, the Contractor shall have all necessary workers, materials, and equipment at the site as needed to proceed with the work in an expeditious manner. While the roadway is closed to traffic, work shall be pursued promptly and without interruption until the roadway is reopened to public traffic.

B. Refer to Section 01500 – Temporary Facilities and Controls.

1.7 UNDERGROUND UTILITIES

A. The Contractor's attention is directed to the existence of certain underground facilities under and in the vicinity of the Work area that may require special precautions be taken by the Contractor to protect the health, safety and welfare of workers and the public. Facilities requiring special precautions include natural gas; and underground electric supply system conductors or cables, with potential to ground of more than 300 volts, either directly buried or in duct or conduit which do not have concentric grounded conductors or other effectively grounded metal shields or sheaths.

B. The Contractor shall notify the City's representative and Underground Service Alert - Northern California (USA): 1-800-227-2600 at least 48 hours prior to performing any excavation or other work close to any underground pipeline, conduit, duct, wire or other structure.

C. If such facilities are not located on the Drawings in both alignment and elevation, no work shall be performed in the vicinity of said facilities until said facilities have been located and identified by the Contractor.

D. Service is to remain uninterrupted, unless directed otherwise by utility company or City's representative. If it is necessary to interrupt service, Contractor must allow sufficient time for utility company to arrange for the continuation of required services. Regardless, Contractor must, at the minimum, notify all utility and service providers 48 hours prior to the start of the work of this Section.

1.8 HAZARDOUS WASTE IN EXCAVATIONS

A. If the Contractor encounters material in excavations that he has reason to believe may be hazardous waste, as defined by Section 25117 of the California Health and Safety Code, he shall immediately so notify the City's representative in writing. Excavation in the immediate area of the suspected hazardous material shall be suspended until the City's representative authorizes resumption of work. If such suspension delays the current controlling operation, the Contractor will be granted an extension of time in accordance with the terms of the Contract.

B. The City reserves the right to retain an independent consultant for exploratory work to identify and determine the extent of such material and for removing hazardous material from such areas.

PART 2 PRODUCTS

2.1 MATERIALS

A. Materials and work involving alterations to existing construction shall conform to requirements of applicable Sections of the Contract Documents.

PART 3 EXECUTION

3.1 DEMOLITION

A. Demolition work shall, in general, be as indicated in the Contract Documents and shall consist of complete removal and disposal of the demolished materials.

B. All removed material, except that to be salvaged, stored on site and needed for backfill, shall become the property of the Contractor and shall be disposed of off-site in a legal manner.
1. Concrete removed shall be broken into pieces, not larger than two (2) feet in the greater dimension, in such that the steel reinforcement bars will be segregated.
2. Provide all necessary temporary enclosures necessary to protect pedestrians from possible injury.

C. Abandonment of subsurface utilities
1. Where utility is greater than 6 inches in diameter and is outside of the building footprint, cap the ends of the line with concrete to prevent entrance of water. The length of the cap shall not be less than five feet. The concrete mix shall have a minimum shrinkage.

3.2 COMPLAINTS

A. Demolition or Construction complaints shall be accurately recorded by the Contractor as to name of complainant, telephone number, address, date, time, nature of the complaint, name of the person receiving the complaint, the complaint investigation conducted,

and the disposition of the complaint. Complaint records shall be kept at the Field Office and shall be available to the City's representative at all times.

3.3 POLLUTION CONTROLS

A. Use water sprinkling, temporary enclosures, and other suitable methods as necessary to limit the amount of dust and dirt rising and scattering in the air to the lowest level of air pollution practicable for the condition of Work to protect adjacent buildings, automobiles and other property. Comply with all governing regulations.

B. Clean adjacent structures and improvements of all dust, dirt, and debris caused by demolition operations.

C. Return areas to condition existing prior to the start of the Work.

D. See additional requirements for dust control included in Section 02010 Site Conditions and Dust Control.

3.4 SALVAGEABLE ITEMS

A. Where required and when so directed by the City's representative to be salvaged and/or reused, existing fixtures and equipment shall be removed in the most careful manner possible to avoid damage; and, if damaged, such items shall be restored to conditions satisfactory to the City's representative.

B. Salvageable items include; but are not necessarily limited to: valves, fittings, etc. All such items shall be delivered to the city yard having jurisdiction over the salvaged item, see Section 01100.

3.5 CLEANING

A. Surfaces to remain, when cut, shall be carefully restored and refinished to provide a continuous, even finish to nearest intersections or edges.

3.6 SITE WASTE DIVERSION

A. Divert green waste and existing structures to be demolished and removed by a minimum of 50% by weight for recycling or reuse purposes. Diverted waste shall be segregated from waste stream and stored in designated recycle or reuse areas. Recycled or reused materials not utilized for the project shall be hauled to construction waste recycling facilities.

END OF SECTION

SECTION 02062

FURNISHING AND INSTALLING PIPE

1.0 GENERAL

1.1 DESCRIPTION

This item shall consist of furnishing all labor, materials, tools, and equipment to construct complete in place sanitary sewers, storm drains, and miscellaneous pipelines in accordance with the Contract Documents. Refer to Subsection 1.6, Protection of Public and Private Property, and Subsection 1.16, Traffic Control, of Section 01500, Temporary Facilities and Controls, Section 02007, Storm Water Pollution Prevention, and Section 02005, Trench and Excavation Safety

2.0 MATERIAL

2.1 VITRIFIED CLAY PIPE

Vitrified clay pipe shall be "extra strength" conforming to ASTM C700. All vitrified clay pipe shall be first quality bell and spigot type, unless otherwise noted in the Special Provisions.

Vitrified clay pipe joints shall be either "Wedge-Lock" or "Speed Seal" or an approved equal, conforming to the requirements of ASTM C425. In non-reactive soil areas and only when allowed in writing by the Engineer, Compression Joint ("Band Seal" or approved equal) with adjustable stainless steel shear ring, conforming to the requirements of ASTM C425, may be used.

2.2 REINFORCED CONCRETE PIPE

Reinforced concrete pipe shall conform to the requirements for the specified class and to the general requirements of ASTM C76 for "Reinforced Concrete Culvert, Storm Drain Pipe, and Sewer Pipe." All pipe shall be Class III, unless otherwise specified in the Special Provisions or shown on the Plans.

A. REINFORCED CONCRETE PIPE - SANITARY SEWERS

Portland cement used in the manufacture of reinforced concrete pipe for sanitary sewers shall conform to the requirements of the specifications for Type V Portland Cement, ASTM C150, unless otherwise specified in the Contract Documents.

Reinforced concrete pipe for sanitary sewers shall be fully lined with high-density polyethlene (HDPE), polyvinyl chloride (PVC), or other material as approved by the Engineer and shall have a rubber gasket joint, conforming to ASTM C443. Neoprene compound gaskets shall be used. Storage and use of gaskets and lubricant shall conform to the above standards. HDPE and PVC joints shall be fully sealed to form a continuous lining as approved by the Engineer.

B. REINFORCED CONCRETE PIPE - STORM DRAINS

Portland cement used in the manufacture of reinforced concrete pipe for storm drains and culverts shall conform to the requirements of Section 90 of the Standard Specifications for Type II Portland Cement, ASTM Designation C150, unless otherwise specified in the Contract Documents.

Reinforced concrete pipe shall be of the bell and spigot type with rubber gaskets. Rubber gasket shall conform to the requirements of ASTM Designation C443. Storage and use of gaskets and lubricant shall conform to the above standards.

2.3 POLYVINYL CHLORIDE (PVC) PIPE

Polyvinyl chloride (PVC) solid wall pipe for sanitary sewer use shall be at least SDR 26 cell classification 12454-B, conforming to ASTM Designation D3034. All PVC pipe shall be first quality bell and spigot type. PVC pipe shall have factory installed elastomeric gaskets and push-on joints, providing a watertight seal, conforming to the requirements of ASTM Designation D3212. PVC pipe larger than twelve inches (12”) in diameter may be used upon approval by the City Engineer.

2.4 CAST IRON PIPE

Cast iron pipe for sanitary sewers and storm drain use shall meet and be in accordance with those standards referenced in ASTM A74. Cast iron pipe shall only be used when specifically noted on the plans or with written consent of the Engineer.

2.5 DUCTILE IRON PIPE

Ductile iron pipe for sanitary sewer and storm drain use shall conform to the requirement of ANSI A 21.50, 1976. Ductile iron pipe shall only be used when specifically noted on the plans or with written consent of the Engineer.

2.6 CORRUGATED STEEL PIPE

Corrugated steel pipe for storm drain use shall conform to AASHTO M36/M36M and ASTM A 760 except as modified in Section 66-1.02 of the Standard Specifications. Corrugated steel pipe shall only be used when specifically noted on the plans or with written consent of the Engineer.

2.7 WATER

Water for dust control, general cleaning, flushing of pipe lines and structures, moistening and compaction shall be from the City's potable water system, the recycled water system, or another approved source. Prior to use of the City's potable water from a fire hydrant, the contractor must obtain a portable water meter from the City Water and Sewer Utility and arrange payment for water used.

3.0 QUALITY AND TESTING OF PIPE

3.1 DESCRIPTION

Pipe shall be of the highest quality meeting the requirements of the designated testing standards. Care shall be taken during shipping to not damage the pipe and shall be properly stored and protected on the job site per manufacturer's recommendations. All pipe and fittings shall be clearly marked with the name or trademark of the manufacturer, the location of the plant, date of manufacture, the class of pipe and/or strength designation.

3.2 QUALITY

The quality of vitrified clay pipe, reinforced concrete pipe, ductile iron pipe, PVC pipe, corrugated steel pipe, and any other pipe specified in the contract documents, as delivered to the job, shall be in conformance with their respective standards.

All pipe and fittings shall be subject to the examination and approval of the Engineer. Any defects in the pipe including chips, cracks, blisters, out of round, etc. that are not within the limits of the designated standards will be rejected. If the quality of the pipe is such that more than five percent (5%) of any lot delivered to the job site becomes subject to rejection, then the entire lot shall be rejected and removed from the job site at the sole expense of the Contractor. In addition, should more than five percent (5%) of the pipe delivered to the site on any given day be rejected, the Engineer retains the right to reject all pipe produced on the day or days of the rejected pipe.

3.3 TESTING OF PIPE

All pipe shall be subject to testing in accordance with the designated test standard. Shipment of all pipe and fittings shall be accompanied by a Certificate of Compliance meeting the requirements of Subsection 1.10, Quality Assurance Control Submittals, of Section 01330, Submittal Procedure.

Tests on reinforced concrete pipe shall be required to determine conformance with "D" load and reinforcing requirements of ASTM C76. Copies of test reports shall be furnished to the Engineer in duplicate prior to use of the pipe in the job.

One section of pipe from each lot to be used shall be tested in accordance with the procedures outlined in ASTM C76. Lots tested shall be marked with the date of test as well as by lot number for shipment to the specific project for which that lot was tested.

Pipe samples for testing shall be furnished without charge by the Contractor a minimum of one week in advance of construction. The cost of testing the pipe shall be borne by the Contractor.

4.0 EXCAVATION

4.1 DESCRIPTION

The Contractor shall perform the necessary excavation for the construction of sanitary sewers, storm drains, manholes, clean outs, catch basins and other appurtenances, disposing of surplus excavated material and shall perform all auxiliary work that may be required thereto. The City will supply horizontal and vertical control. This shall usually consist of one point for vertical control and two for horizontal as shown on the drawings. The Contractor shall be responsible for layout of the work from these control points. The Contractor shall be responsible for the accuracy of his work and shall use all necessary safe guards to protect the control supplied by the City. The Contractor shall reimburse the City should it be necessary to reset the control due to negligence of the Contractor. Refer to Subsection 1.6, Protection of Public and Private Property, and Subsection 1.16, Traffic Control, of Section 01500, Temporary Facilities and Controls, Section 02007, Storm Water Pollution Prevention, and Section 02005, Trench and Excavation Safety.

4.2 CUTTING OF PAVEMENT

Pavement shall be initially cut along the edge limits of the trench using a method which does not cause damage to surrounding pavement and so that any impact does not cause damage and stress to surrounding improvements including those on private property. Prior to paving the trench with permanent pavement, but after the trench is backfilled and the trench has been approved for paving by the Engineer, the existing pavement shall be saw cut 6 inches beyond the edge of the trench in order to key the replacement pavement into the existing pavement. Where pavement has been damaged during trenching beyond the above saw cut or where a pavement crack caused the removal to go outside the pavement removal area, the edge of pavement shall be prepared so it is straight and vertical.

Saw cuts in asphalt and Portland cement concrete pavements shall be to a depth of at least three inches (3”), unless otherwise shown in the Contract Documents. The Engineer may determine that additional saw depth is required in order to cause a straight line and to leave a sound edge of pavement. Concrete curbs, walks, gutters, cross gutters and driveways shall be removed to neatly sawed edges with saw cuts made completely through the concrete along the nearest score mark. The limits of removal shall be approved by the Engineer. All work during its progress and after its completion shall conform to lines and grades given by the Engineer.

4.3 TRENCHING

The width of the trench shall not be less than twelve inches (12”), nor more than twenty-four inches (24”) greater than the outside diameter of the barrel of the pipe to be laid therein. Where trench shoring is required, this width shall be increased by the thickness of the shoring when appropriate.

Should the trench be excavated to a greater depth than that given by the Engineer, the Contractor shall, at his own expense, bring such excavation to the required grade with such material as the Engineer may designate, notwithstanding that it may be necessary to import suitable material, as directed by the Engineer.

In no case shall more than three hundred feet (300’) of trench be opened in advance of the pipe laying, and no more than three hundred feet (300’) left unfilled in the rear thereof, unless permission is obtained in advance from the Engineer. In the active public right of way, no more than one hundred feet (100’) of trench shall be opened in advance of pipe laying and no more than one hundred feet (100’) unfilled in the rear, thereof, unless permission is obtained in advance from the Engineer. The above distances may be reduced by the Engineer, whenever it is determined that the public safety or convenience is potentially impacted. Excavated material shall be promptly removed from the jobsite.

The excavation shall be supported so that it is safe, the ground alongside the excavation will not slide or settle, and all existing improvements, either on public or private property, will be fully protected from damage.

All supports shall be removed after construction is completed, unless otherwise directed by the Engineer, and shall be withdrawn in a manner that will prevent the caving of the sides of the excavation. All openings caused by the removal of supports shall be filled in accordance with Section 02019, Earthwork.

Tunneling may be permitted in certain instances with the length of any tunnel not to exceed eight feet (8') only after obtaining written approval from the Engineer. Before backfilling trenches, the backfill in the tunnel shall be thoroughly compacted to the satisfaction of the Engineer.

Special care shall be taken to have all fire hydrants and water valves kept accessible at all times. The Contractor shall not obstruct the gutter of any street or alley, but shall use acceptable methods to allow for the free passage of surface water along the gutters into storm water inlets as approved by the Engineer. Flood control channels and storm drains shall be protected from the discharge of dirt, silt, and other non-acceptable materials in accordance with Section 02007, Storm Water Pollution Prevention.

The Contractor shall cooperate with the owners and tenants of the private property through which right-of-way may extend. The Contractor shall be liable for all damages suffered by all owners or tenants resulting from his negligence or lack of cooperation.

5.0 IMPORTED BEDDING MATERIAL

5.1 DESCRIPTION

Imported pipe bedding material is required. Where the specified depth of pipe bedding material is not sufficient due to groundwater or soft, yielding, or otherwise unsuitable material in the bottom of the trench, which in the opinion of the Engineer is an unsuitable foundation for the pipe, such material shall be excavated from the full width of the trench, to a depth satisfactory to the Engineer and replaced with additional pipe bedding material.

5.2 BEDDING MATERIAL REQUIREMENTS

Imported Bedding Material shall conform to Class 1, Type B Permeable Material as defined in Article 68-1.025 of the Standard Specifications and shall consist entirely of crushed, angular rock with no pea gravel. Bedding material shall be to the depth specified in the Contract Documents in order to provide a firm and stable support for the pipe. If no depth is specified, backfill shall be per the City of Santa Clara Standard Details. The bedding zone shall be defined as the envelope around the pipe extending underneath and above the pipe as indicated in the Contract Documents.

The bedding material shall be shaped to fit the bottom of the pipe providing uniform support throughout the length of the pipe. After the pipe has been placed on the bedding material, the next step is providing effective support of the pipe in the haunch area. The bedding material shall be carefully worked under the haunches of the pipe to provide adequate lateral support. Care must be taken during placing of the bedding material to prevent movement of the pipe. Imported Bedding Material shall be mechanically densified to give the required pipe support.

5.3 IMPORTED BEDDING FOR PVC PIPE

Bedding material for PVC pipe shall be tamped with vibratory compactor under the haunches to the springline of the pipe in eight-inch (8”) maximum lifts filling both sides of the pipe at the same time conforming to ASTM Designation D2321. Special care shall be taken to prevent movement of the pipe during placing of the bedding material under the pipe haunch. Bedding material above the springline of the pipe shall not be placed until the placed pipe has been inspected and accredited for grade and alignment by the Engineer and approved for backfilling. Once approved for backfilling by the Engineer, the placement and tamping with vibratory compactor of bedding material shall continue in eight-inch (8”) maximum lifts.

6.0 PIPE INSTALLATION

6.1 DESCRIPTION

All pipes and fittings shall be laid accurately to the lines and grades as shown on the plans and as provided by the Engineer. Joints shall be properly made up with pipes properly inserted into hubs and gaskets shall be fully seated. Special care shall be taken that there is no sagging of the spigot end in the hub and that a true surface is given to the invert throughout the entire length of the reach being laid. The pipe shall be centered in the trench. A uniform surface shall be provided in the trench, with full bearing under the entire length of the pipe.

The pipe shall be laid continuously upgrade, starting at the low end of the system, with the hub or socket end being upgrade unless otherwise permitted by the Engineer.

When it is necessary to cut PVC pipe for placement of fittings, damaged pipe, etc., it is essential that a square cut be made to ensure proper assembly. The cut ends shall be beveled to manufacturer's specifications.

The interior of all pipe shall be kept free from dirt, mortar, and other foreign material as the pipe laying progresses and left in a clean condition at the completion of the work.

Suitable excavation shall be made in the bottom of the trench to receive the socket or collar in order to relieve the load on the joint and to provide ample space for making the joints. Care should be taken not to disturb the joints already laid. If any previous length of pipe is moved or disturbed so as to adversely effect any joint, the joint shall be corrected.

The pipe shall be securely closed with a tight fitting plug or cover at the end of each work day, or when work ceases, to prevent unwanted material from entering the pipe. During the pipe laying process, the pipe shall be protected from damage due to any work over the pipe prior to the placement of sufficient protective backfill.

When removing manhole base concrete to connect a pipe to an existing manhole, special care shall be taken not to damage (crack) the concrete manhole base. If the concrete base is damaged, as determined by the Engineer, it shall be removed and discarded and a new concrete base formed in accordance with Section 02070, Storm and Sanitary Sewer Manholes, Drainage Structures, and Miscellaneous Structures.

6.2 PIPE GRADE

Grade and alignment of the trench and pipe shall be controlled by a laser beam system, which complies with OSHA requirements. The laser system shall have good visibility when used with a suitable target. The laser system must be of the self-leveling type so that the laser beam automatically compensates for minute disturbances. The laser system setup must be checked frequently to verify that it is functioning properly and has not been disturbed. The method of control is to provide a true line and grade, conforming to the plans.

The laser system must also have a warning system that instantly warns the pipe layer when the laser is off grade. The laser system is to be provided by the Contractor and shall have a minimum accuracy for line and grade of +/_ 0.01 foot per 100 feet and a minimum visible range of 1,000 feet.

All adjustments to the pipe to meet line or grade during the pipe laying process shall be accomplished by filling under the entire length of the pipe and not by wedging or blocking.

6.3 SANITARY SEWER LATERALS

Sanitary sewer laterals shall be made of the same material as the sanitary sewer main it connects to, unless otherwise indicated in the Contract Documents. Sanitary sewer laterals shall be installed from the sanitary sewer main to the property or easement line, terminating at a sanitary sewer cleanout. Refer to Section 02070, Storm and Sanitary Sewer Manholes, Drainage Structures, and Miscellaneous Structures, for sanitary sewer cleanout requirements. Sanitary sewer laterals shall be connected to the main with a factory fabricated wye. The configuration of the sanitary sewer lateral shall conform to the detail shown in the Standard Details. The same backfill provisions for the sanitary sewer main shall apply for sanitary sewer laterals.

Full compensation for sewer laterals shall be the contract price paid per linear foot for the size and kind of sewer pipe involved.

7.0 TRENCH BACKFILL

7.1 DESCRIPTION

Unless otherwise noted in the Contract Documents, trench backfill shall comply with the Standard Details. Imported backfill shall conform to the requirements of Section 02019, Earthwork. Trench backfill shall be placed to provide a uniformly compacted backfill in a way that does not disturb or otherwise damage the pipe and minimizes settlement in the surface of the trench. Care shall be exercised so as to not damage the edge of pavement of the trench. Refer to Subsection 1.6, Protection of Public and Private Property, and Subsection 1.16, Traffic Control, of Section 01500,Temporary Facilities and Controls, and Section 02007, Storm Water Pollution Prevention.

Where the pipe is in fill, the fill shall be compacted before laying the pipe so as to attain a minimum relative compaction of not less than ninety-five percent (95%).

7.2 COMPACTION

Trench backfill material shall be compacted using mechanical compaction methods approved by the Engineer. No jetting of material will be allowed. Permission to use specific compaction equipment shall not be construed as guaranteeing or implying that the use of such equipment will not result in damage to adjacent ground, existing improvements, or improvements installed under the contract. The contractor will make his own determination in this regard.

Material shall be backfilled in even horizontal eight inch (8”) thick, maximum uncompacted, lifts or as directed by the Engineer. Material shall be compacted to ninety-five percent (95%) relative compaction. Relative compaction test shall be in accordance with Test Method No. ASTM 2922. Contractor shall excavate backfilled trench to provide access for soil compaction tests to the depth required by the Engineer. Said excavation and the required backfill shall be considered incidental and no additional compensation will be made therefore.

7.3 PAYMENT FOR IMPORTED BACKFILL

Payment for imported backfill shall be included in the item for furnishing and laying pipe, and no further compensation shall be allowed.

7.4 DRAINAGE AND WATER

If it is necessary in the prosecution of the work to interrupt or obstruct the existing drainage of the lands, making necessary any temporary drains or ditches, the Contractor shall provide and maintain the same during the progress of the work in such manner that no damage shall result to either public or private property. In case of any neglect to provide for either natural or artificial drainage that may have been interrupted, the Contractor shall be held liable for all damages that may result.

The Contractor shall provide and maintain at his own expense satisfactory drainage from all pumps or trenches. He shall remove from the trench whatever amounts of ground water, infiltration, surface or storm water necessary for proper placement of the pipe. Flood control channels and storm drains shall be protected from the discharge of dirt, silt and other non-acceptable materials in accordance with Section 02007, Storm Water Pollution Prevention.

8.0 PAVEMENT REPLACEMENT

8.1 DESCRIPTION

Trench pavement replacement shall conform to Section 02026, Aggregate Base, Section 02039, Asphaltic Concrete Pavement, Section 02040, Portland Cement Concrete Pavement, and to the Contract Documents. Refer to Subsection 1.6, Protection of Public and Private Property, and Subsection 1.16, Traffic Control, of Section 01500, Temporary Facilities and Controls, and Section 02007, Storm Water Pollution Prevention.

Where pavement sections are not shown on the plans, pavement replacement shall conform in kind to the pavement removed. Where asphalt pavement existed, the replacement pavement section thickness shall match the existing section but in no case shall it be less than three inches (3”) of asphaltic concrete over twelve inches (12”) of aggregate base or eight inches (8”) of full depth asphaltic concrete as directed by the Engineer. Where Portland cement concrete surfacing exists, pavement replacement shall match the existing but not be less than six inches (6”) of Portland cement concrete over six inches (6”) of aggregate base.

Unless otherwise specified in the Contract Documents, pavement replacement shall immediately follow trench backfill. Should the Contractor's operation be such that final pavement restoration does not follow immediately after trench backfill, the Contractor, at his expense, shall install temporary pavement to cover the trench and make it safe for the public to use the roadway. Temporary pavement shall not be less than two inches (2”) of plant mix asphalt over four inches (4") of aggregate base. On heavily traveled roadways, a thicker pavement section shall be provided as determined by the Engineer.

Contractor shall perform all repair and maintenance of the temporary pavement to keep the roadway, including sidewalks, smooth and safe for pedestrians, bicyclists, and vehicles and free of dust and debris. All traffic control devices shall be maintained as provided in the approved traffic control plan per Subsection 1.16, Traffic Control, of Section 01500, Temporary Facilities and Controls, and as directed by the Engineer. If there is no Traffic Control Plan or if it is not addressed in the Traffic Control Plan, the Contractor shall install temporary lane markers such that the traffic lanes, crosswalks, and similar lane markings are clear to the satisfaction of the Engineer.

9.0 CLEANING, FLUSHING AND PLUGGING

9.1 DESCRIPTION

It shall be the Contractor's responsibility to keep dirt and debris from entering existing pipelines. The contractor is responsible for cleaning pipelines and structures.

9.2 SANITARY SEWER LINES

Upon completion of the work, including on-site work, the Contractor shall flush the sanitary sewer lines, including sanitary sewer laterals from the clean-out to the main, with water until all dirt and debris are removed. The dirt and debris shall be removed from the newly constructed lines and shall not be allowed to flow down the City sanitary sewer system. A screen or other device shall be used by the contractor in the manhole immediately down stream of the section being cleaned to catch any foreign material. Sanitary sewer main flushing shall be done with a Wayne sewer ball and sanitary sewer lateral flushing shall be done with a rotary cleaning tool or approved equal and the pressure of the water during flushing shall be sufficient to provide a minimum cleansing velocity of five feet (5') per second. The equipment used for flushing and the pressure of the water shall be adequate to remove all material from within the sanitary sewer lines as determined by the Engineer. When a new sewer is connected to an existing line at a point between existing manholes, cleaning and flushing with an approved sewer ball shall be carried out to the first existing manhole downstream from the point of connection.

The sanitary sewer lines shall be plugged off at all manholes. Plugs shall be removed by the Contractor upon final acceptance of the work by the City or upon approval from the Engineer for operation of the sanitary sewers before acceptance. The procedure for the latter shall be as follows:

When deemed necessary by the Engineer, the City may run sewage from dwellings or other buildings into a sanitary sewer system, prior to acceptance of improvements by the City. In such case, the following procedure shall be followed:

A. The newly constructed sanitary sewer system, including sanitary sewer laterals, is thoroughly cleaned and flushed as noted above.

B. All repairs are completed in the sanitary sewers and manholes below the castings.

C. All castings are grouted in place to grade on manholes.

D. In lieu of C. above, a steel plate may be set over the manhole in place of the standard manhole casting providing it is secured and made safe for traffic.

E. A wooden protective cover shall be constructed at the bottom of the manhole directly over the sanitary sewer line, on top of the "shelf," to prevent debris from entering the sanitary sewer line.

9.3 STORM DRAIN PIPES

Storm drain pipes shall be cleaned of all dirt and debris prior to being put into use and/or prior to acceptance. No foreign material shall be allowed to enter the City's storm drain system or flood control channels. A screen or other device shall be installed by the contractor in the manhole immediately down stream of the section of pipe being cleaned to catch any debris.

10.0 PIPE LINE LEAKS

10.1 DESCRIPTION

Pipelines shall be constructed to be free from leaks due to exfiltration and infiltration. Prior to acceptance, the pipelines shall be tested and/or inspected to determine if any leaks exist due to faulty joints or broken or cracked sections. If leaks are found, the pipeline shall be permanently repaired at the Contractor's expense in a manner acceptable to the Engineer.

10.2 SANITARY SEWER PIPES

A low pressure air test shall be performed by the Contractor prior to the acceptance of sanitary sewer lines. Contractor shall furnish all necessary test equipment acceptable to the Engineer. Test shall be performed after the trench is backfilled and compacted and prior to placement of pavement. The test shall be done in the presence of the Engineer, or his authorized agent, in accordance with the following procedure:

A. Immediately prior to testing, the sanitary sewer line shall be cleaned and test plugs properly installed at each end of the section of line to be tested.

B. When all necessary test equipment is in place, a compressed air supply shall be attached to the air fitting on the test equipment and the air pressure within the line increased to four (4) pound per square inch gage (psig).

C. After an internal pressure of four (4) psig is obtained, Contractor shall allow at least two (2) minutes for air temperature to stabilize, adding only the amount of air required to maintain the specified pressure.

D. After the two (2) minute period, the Contractor shall disconnect the air supply.

E. The Engineer, or his authorized agent, shall observe the pressure gauge connected to the sewer line being tested and start a stop watch when the pressure decreases to 3.5 psig and stop the stop watch when the pressure gauge reaches 2.5 psig for VCP or to 3.0 psig for PVC pipe.

F. The pipe section being tested shall pass the air test when the time required for the pressure to decrease from 3.5 psig to 2.5 psig for VCP or to 3.0 psig for PVC pipe is not less than the minimum holding time shown on the following tables for VCP and PVC pipe for the respective size and length of pipe.

G. If the pipe section fails to meet the test requirements, the Contractor shall determine at his own expense the source or sources of leakage, and shall either make suitable repairs or replace the defective materials. The repaired pipe installation shall be retested and meet the requirements of this test.

H. The Contractor shall correct, stop, or otherwise remedy individual leaks in the section of the sewer line being tested even though such leakage might come within the allowable maximum.

I. The test shall include sewer laterals between the sewer cleanout near the right-of-way line and the sewer main.

AIR TEST TABLES

VCP SANITARY SEWER

DIAMETER OF PIPE (INCHES)	LENGTH OF LINE (FEET)	MINIMUM HOLDING TIME (MINUTES)
4	All Lengths	2
6	0 to 300	2
6	300 to 370	2.5
6	370 and greater	3
8	0 to 170	2
8	170 to 210	2.5
8	210 to 250	3
8	250 to 290	3.5
8	290 and greater	3.75
10	0 to 110	2
10	110 to 165	3
10	165 to 215	4
10	215 and greater	4.75
12	0 to 115	3
12	115 to 155	4
12	155 to 190	5
12	190 and greater	6
15	0 to 120	5
15	120 to 165	7
15	165 and greater	8
18	All Lengths	8.5
21	All Lengths	10
24	All Lengths	12.5
27	All Lengths	14.5

NOTE:
IF THE SECTION OF SANITARY SEWER TO BE TESTED IS COMPOSED OF BOTH A MAIN LINE AND MORE THAN 100 FEET ACCUMULATIVE OF SANITARY SEWER LATERALS, ADD 2 MINUTES TO THE LENGTH OF TEST REQUIRED FOR THE MAIN.

PVC PIPE SANITARY SEWER

DIAMETER OF PIPE (INCHES)	LENGTH OF LINE (FEET)	MINIMUM HOLDING TIME (MINUTES)	TIME FOR LONGER LENGTH (L IN FEET) (SECONDS)
4	All Lengths	2.8	N/A
6	0 to 398	2.8	(0.427)L
8	0 to 298	3.5	(0.760)L
10	0 to 239	4.4	(1.187)L
12	0 to 199	5.7	(1.709)L

NOTE:
IF THE SECTION OF LINE TO BE TESTED INCLUDES MORE THAN ONE PIPE SIZE (e.g., SEWER LATERALS), CALCULATE THE TEST TIME FOR EACH SIZE AND ADD THE TEST TIMES TO ARRIVE AT THE TOTAL TEST TIME FOR THE SECTION.

10.3 STORM DRAINS

The contractor shall observe the flow of water from the completed storm drain after backfilling the trench but prior to paving and after all possible connections to the pipe line including catch basins, laterals, intersecting lines, etc. have been plugged or blocked. Any flow from the pipe at the downstream end indicates infiltration into the pipeline and such leak is required to be located and repaired by the Contractor at his expense in a manner satisfactory to the Engineer.

11. FLEXIBLE PIPE TEST FOR PVC PIPE

Two 5% deflection gauge tests shall be performed by the Contractor, prior to the acceptance of PVC sanitary sewer lines. The Contractor shall furnish all necessary test equipment acceptable to the Engineer. The first test shall be performed immediately after the trench is backfilled and compacted, and prior to placement of the structural pavement section, if applicable. The second test shall be performed no less than thirty (30) days following completion of the pipe installation, including the structural pavement section, if applicable. The tests shall be done in the presence of the Engineer in accordance with the manufacturer's procedure.

Prior to testing, the sewer line shall be cleaned and flushed in accordance with this Section 02062.

The pipe test section shall be considered to pass the gauge test if the 5% gauge mandrel or deflectometer is passed through the pipe section without stopping and without applying more force than would be required to pull the same mandrel through a non-deflected equal length pipe section. Pulling of the gauge is usually done by hand. The pulling motion should be smooth and easy to avoid jamming the gauge if an obstruction is encountered in the line. The gauge should have a line on each end to facilitate removal should the gauge become obstructed in the direction of pull. If the gauge stops lightly, pull on it to see if it will clear the obstruction. When it appears that the gauge will not go forward, record the distance from the manhole at which the gauge is stuck and then pull the gauge back out. Do not use mechanical equipment to force the gauge through.

If the pipe installation fails to pass, the Contractor shall determine the source or sources of deflection, and the Contractor shall repair or replace, at his own expense, all defective materials or workmanship. The repaired pipe installation shall meet the requirements of this test.

Full compensation for performing the flexible pipe gauge test shall be considered as included in the contract price paid per linear foot for the size of PVC sanitary sewer pipe involved, and no separate payment will be made therefore.

12.0 VIDEO INSPECTION

After new lines have been thoroughly cleaned and tested as described in this Section 02026, the Contractor shall provide state of the art video inspection equipment and services to perform the video inspection, using DVD format or other format as approved by the Engineer, of all sanitary sewer lines prior to acceptance. The video inspection report shall include, but is not limited to, the video and written log with the date, location, project name, pipe material and size, and all pipe deficiencies with location of video footage. The video inspection report shall be furnished to the City for its permanent records. Upon written notice by the Engineer, the Contractor shall correct all deficiencies revealed in the video inspection report.

13.0 MEASUREMENT AND PAYMENT

13.1 PIPE

Measurement for mainline pipe, complete in place, shall be per lineal foot measured from center of manhole to center of manhole following a line parallel to the grade of the sewer. Measurement for lateral pipe, complete in place, shall be per linear foot measured from center of the clean-out, manhole, or catch basin to the center of the manhole at the main or to the center of the main, as appropriate.

Payment shall include the furnishing of all labor, materials, tools, and equipment required to construct and complete in an efficient and workmanlike manner the installation of the pipe in accordance with the Contract Documents. The price paid per lineal foot shall include all pipe, fittings, trenching, disposing of surplus excavated material, imported bedding, imported trench backfill, temporary trench pavement, sanitary sewer clean-outs, testing, and pavement replacement. No additional compensation shall be allowed other than for permanent trench pavement, manholes, catch basins, junction structures, sanitary sewer cleanouts, etc. if specified in the Contract Documents.

Should additional depth of imported bedding material be required from that indicated in the Contract Documents due to unforeseen conditions in the trench, a price shall be established and approved by the Engineer. For the purposes of measurement, the theoretical volume of material removed and replaced in cubic yards shall be computed using the outside diameter of pipe plus twenty-four (24") inches as the width and the depth shall be the distance from the bottom of the required bedding plane to the elevation the Engineer requires the excavation to be taken.

Full compensation for all incidentals arising from this work shall be considered as included in the price paid per unit of measure and no further compensation shall be allowed.

13.2 PAVEMENT REPLACEMENT

Payment for temporary and final pavement is included in the price paid for pipe in place.

END OF SECTION

SECTION 02070

STORM AND SANITARY MANHOLES, DRAINAGE STRUCTURES, AND MISCELLANEOUS STRUCTURES

1.0 GENERAL

1.1 DESCRIPTION

This section consists of manholes for storm drain and sanitary sewer systems, drainage structures, including pipe headwalls, drop inlets, catchbasins, junction boxes, sewer clean-outs, flushing inlets and other miscellaneous structures identified in the Contract Documents. These structures shall conform to first, the Standard Details and second, Sections 51, 52, and 75 of the Standard Specifications and ASTM C47, insofar as they are applicable.

2.0 MATERIALS

2.1 DRAINAGE STRUCTURES

Portland cement concrete for drainage structures shall be Class 2 concrete with Type II Modified cement conforming to Section 90 of the Standard Specifications with combined aggregate grading of 1-1/2” inch maximum. Reinforcing steel shall conform to Section 52 of the Standard Specifications.

Frames, grates, hoods, and other miscellaneous metal shall conform to first, the Standard Details and second, Section 75 of the Standard Specifications, insofar as they are applicable.

2.2 SANITARY SEWER STRUCTURES

Portland cement concrete for sanitary sewer structures shall be Class 2 concrete with Type V cement conforming to Section 90 of the Standard Specifications with combined aggregate grading of 1-1/2” maximum. Reinforcing steel shall conform to Section 52 of the Standard Specifications.

2.3 PRE-CAST CONCRETE MANHOLE SECTIONS

Pre-cast reinforced concrete manhole sections shall conform to the requirements of ASTM C478, except that manhole steps and ladders shall not be provided unless specifically required in the Contract Documents.

2.4 IRON CASTINGS

Iron castings for manhole frames and covers and for cleanouts, etc. shall conform to the Standard Details, ASTM A48, and shall have a minimum tensile strength of 20,000 psi. Iron castings shall be given a hot asphalt dip. Other protective treatment may be substituted as equivalent protection upon approval of the Engineer.

2.5 JOINT SEALER

Sealant for all joint surfaces of precast manhole sections and the manhole base shall be preformed plastic sealing gasket, which meets or exceeds Federal Specification SS-S-00210.

2.6 SEWER CLEANOUTS

Sanitary sewer cleanout pipe assemblies shall conform to the Standard Details unless specified otherwise in the Contract Documents.

3.0 CONSTRUCTION

3.1 DRAINAGE STRUCTURE

Concrete drainage structures will be cast in place unless otherwise indicated in the Contract Documents. Forms shall be inspected and approved by the Engineer prior to placement of concrete. Expansion and contraction joints shall be placed as required by the Contract Documents and as directed by the Engineer. Drainage structures shall be poured monolithically unless otherwise indicated. Not more than thirty (30) minutes shall elapse between successive pours for an individual structure. All concrete shall be used while fresh and before it has taken an initial set. Re-tempering any partially hardened concrete with additional water or by vibrating shall not be permitted. Concrete additives require the written approval of the Engineer. The contractor shall submit a concrete mix design for review and approval to the Engineer a minimum of one (1) week in advance of making any pours. A smooth trowel finish shall be applied to all exposed portions of the structure. The floor of the structure shall have slope from inlet to outlet and shall be free of “birdbaths” over .04 feet in depth.

Excavation and backfill shall conform to Section 02005, Trench and Excavation and Safety, and Section 002062, Furnishing and Installing Pipe, the Standard Details, Section 19 of the Standard Specifications, unless otherwise indicated, and to the Contract Documents. Refer to Subsection 1.6, Protection of Public and Private Property, and Subsection 1.16, Traffic Control, of Section 01500, Temporary Facilities and Controls, and Section 02007, Storm Water Pollution Prevention. The Contractor is to coordinate with the City who will install “No Dumping Flows to Bay” plaques near newly constructed catch basins.

3.2 MANHOLE

Manhole construction shall meet the requirements of the plans and City of Santa Clara Standard Details. The excavation for the manhole shall have a flat bottom on firm and undisturbed earth. The excavation shall be of sufficient depth to ensure a minimum of six inches (6") of concrete below the lowest pipe in the manhole.

The concrete for base construction shall be placed in a continuous pour, care being taken that segregation of materials does not occur. Consolidation shall be by tamping and working to achieve a dense watertight mass. The depth of concrete shall be sufficient to provide three (3”) inches of concrete above the top of the highest pipe in the base. No reinforcement is required unless otherwise required by the Contract Documents.

An approved metal impression ring shall be used to produce a level keyed slot to receive the barrel section. The concrete shall be worked under and around the impression ring so that a continuous smooth impression results.

Where possible, the main pipe shall be laid through the manhole so that the pipe can serve as the channel. After the concrete has set, at a time approved by the Engineer, the top one-half of the pipe shall be removed to the inside wall of the manhole and the cuts made smooth with mortar.

In manholes where it is not practical to lay the pipe through the manhole (such as at angle points and at intersections), the pipes shall end at the inside wall of the manhole base. Channels will be formed in the concrete base joining the pipes with smooth curves of maximum radius, directing the flow downstream. The bottoms of channels so formed shall conform to the bottom halves of the pipes being joined. The “shelves” on the base shall be troweled smooth with a slope of approximately one percent (1%) toward the main channel.

When a change in elevation or slope is called for across the manhole, the bottoms of the channels shall be warped to achieve a smooth curve resulting in an even flow without turbulence.

Joints between pre-cast reinforced concrete sections and between the base and the first pre-cast section shall be sealed with the joint sealer specified above in Subsection 2.5, Joint Sealer, such as "Ram Nek" or approved equal, installed according to the manufacturer's recommendations, to insure a watertight joint. Grade rings from the top of the last pre-cast section to the surface shall be installed on a continuous bed of mortar.

Particular care must be taken to protect the manhole from damage and to keep rock, dirt or debris from getting into the pipe system. A steel cover of adequate strength (safe to traffic), close fitting and well secured, shall be kept over the manhole opening until the frame and cover are permanently installed. A wooden cover shaped to completely cover the bottom of the manhole shall be installed and left in place until the frame and cover are installed.

The manhole frame and cover shall be permanently set when so authorized by the Engineer. The frame shall be centered on the grade rings and set on a layer of mortar to final grade. The mortar shall be neatly struck to make a smooth interior face in the manhole. A concrete collar, to securely anchor the frame to the manhole neck, shall be formed and poured around the outside of the manhole neck in accordance with the City of Santa Clara Standard Details. The frames of manholes in non-roadway areas shall be secured to the cone or grade ring with a continuous band of an approved waterproof epoxy cement. If any grade rings are exposed, they shall be secured to each other by the same epoxy cement.

When PVC pipes are being installed in a manhole base, a rubber "water-stop" of a type recommended by the manufacturer of the particular pipe shall be centered under the barrel of the manhole and set in the manhole base, as shown on the City of Santa Clara Standard Details. Said "water-stop" may consist of a manhole coupling with rubber sealing rings cast into the manhole base. The "water-stop" shall be firmly fitted around the pipe exterior.

When VCP pipes are being installed in a manhole base, the pipe shall be snapped off no more than twelve inches (12") from the outside edge of the base, and a flexible joint such as "Band-Seal" Coupling, installed to allow for possible differential settlement of the manhole base and the pipe.

3.3 CLEAN-OUT ASSEMBLY

A clean-out assembly, which includes the clean-out box, shall be installed at the right-of-way or easement line for each sewer lateral installed. Construction and installation of each cleanout assembly shall conform to the details shown in the Standard Details. The clean-out assembly, including the wye, bend, riser, plug, and box, shall be considered incidental to the installation of a sanitary sewer lateral and no additional payment will be made therefore.

4.0 MEASUREMENT AND PAYMENT

All work involved in furnishing and constructing storm and sanitary manholes, drainage structures and miscellaneous structures, except clean-out assemblies, will be measured and paid for per each, complete in place, unless otherwise specified in the Contract Documents.

Payment made at the bid price per unit of measure shall include full compensation for furnishing all labor, materials, tools, equipment, and incidentals, and for doing all the work involved in constructing Storm and Sanitary Manholes, Drainage Structures and Miscellaneous Structures, including but not limited to the furnishing and placing of concrete, frames, grates, hoods, manhole frames and covers, reinforcing steel, excavation, backfill, traffic control and other work and material incidental thereto as required by the Contract Documents and as directed by the Engineer.

END OF SECTION

THIS PAGE
WAS INTENTIONALLY
LEFT BLANK

SECTION 02071

WATER MAINS AND SERVICES

1.0 GENERAL

1.1 SCOPE OF WORK

The work shall include the furnishing of all labor, materials, tools, equipment, and incidentals required to construct and complete in an efficient and workmanlike manner the installation of public water mains and related facilities in accordance with the Plans and Specifications. Public water facilities include but are not limited to all those facilities including the water main, valves, fittings and appurtenances complete in-place to the back of meters and/or backflow prevention devices. All materials to be domestic made.

1.2 ADDITIONAL DEFINITIONS AND TERMS

Refer to Section 00050 of the General Provisions for definitions and terms. In addition, the following definitions and terms are used herein.

A. "A.S.T.M." shall mean the American Society for Testing and Materials.

B. "AWWA" shall mean the American Water Works Association, and it is intended that the current requirements of their standards shall govern throughout, unless otherwise herein specified. Such AWWA requirements shall be used in their entirety unless otherwise noted.

C. "DPH" shall mean California Department of Public Health.

D. "Engineer" shall mean the Director of Water & Sewer Utilities of the City of Santa Clara, or designee.

2.0 MATERIALS

2.1 DUCTILE IRON PIPE

Ductile iron pipe shall be Pressure Class 350 conforming to AWWA Standards C150 and C151.

Unless otherwise specified in the special provisions, ductile iron pipe shall receive an asphaltic coating as specified in AWWA Standard C151 and a cement lining conforming AWWA Standard C104. Ductile iron pipe and fittings shall be wrapped with an approved polyethylene encasement per AWWA Standard C105.

All ductile iron pipe joints shall be mechanically restrained. Mechanically restrained joints shall be “TR FLEX” Restrained Joint or Tyton pipe with Field-Lok gaskets by U.S. Pipe, Flex-Ring or Lok-Ring Restrained joints by American Ductile Iron Pipe, or equal. As an alternative, joints may be restrained with EBAA Iron Megalug restraints, Tyler MJ field loc restraints or equal.

Mechanical joint bell, flange, bolts, follower gland-sealing gasket and accessories shall conform to the requirements of AWWA Standard C-111. Bolts shall be Type 316 stainless steel, Class 2, conforming to ASTM A193 for bolts and ASTM A194 for nuts.

All rubber gaskets and rings shall be ethylene propylene diene monomer (EPDM).

2.2 POLYVINYLCHLORIDE PIPE

Polyvinylchloride pipe (PVC) shall conform to the requirements of the latest revision of the AWWA Standards C900 and C905, and shall be minimum of Pressure Class 200 psi and dimension ratio of 14, ductile iron pipe equivalent outside diameter and rubber ring mechanical joints. Recycled water pipes shall be purple or wrapped with purple polywrap.

2.3 DUCTILE IRON FITTINGS

Ductile iron compact mechanical joint fittings shall be used on all ductile iron and polyvinylchloride pipelines and shall conform to AWWA Standard C153, latest revision, in material, body thickness, and radii of curvature. Mechanical joint fittings shall be cement-lined in accordance with AWWA Standard C104, latest revision. Flange ends, except as required by the Plans or the Water Department Standard Drawings, may be substituted only after approval of the Engineer. Ductile iron fittings shall be wrapped with an approved polyethylene encasement per AWWA Standard C105.

2.4 GATE VALVES

Gate valves shall be interior and exterior epoxy-coated, resilient seat gate valves with 316 stainless steel fasteners and trim, non-rising stem, open left, two-inch (2") square wrench nut and with 316 stainless steel retainer nut inside, in accordance with AWWA Standards C509 and C550. All rubber material shall be EPDM. The valves shall have ends designed to join directly with the type of pipe or fitting being used or with ends called for on the Plans.

2.5 VALVE BOXES

Gate valve boxes shall be per the Water Department Standard Drawings. Covers shall be marked "Water" for potable water boxes or “CSC-RW” for recycled water boxes. Valve risers shall be a single length of eight-inch (8") diameter polyvinylchloride pipe - SDR 35.

2.6 BLOWOFF BOXES

Valve boxes for manual blowoff assemblies shall be the same as item number 2.5 VALVE BOXES. Covers shall be marked "Water" for potable water boxes or “CSC-RW” for recycled water boxes.

2.7 FIRE HYDRANTS

Fire hydrants shall be furnished with buries with inlets that shall be mechanical joint. All hydrants shall be fusion epoxy-lined interior and the exterior shall be coated pursuant to Water Department Standard Drawings and Specifications. All hydrants shall have National Standard hose threads on outlets and 1-1/8" pentagonal tips on caps and valve stems. Hydrant bury shall be 30" to 48" long with 6" inlet.

2.8 HYDRANT RISER (EXTENSION)

Hydrant risers or extension shall be with localized breakoff scoring on the exterior near each flanged end. Break-off bolts shall be hollow.

2.9 FLANGES

Steel pipe flanges shall conform to the requirements of AWWA Standard C207, Class D. Bolts shall be Type 316 stainless steel, Class 2, conforming to ASTM A193 for bolts and ASTM A194 for nuts. Flange and bolt coatings shall match adjacent pipe. Gaskets shall be full face rubber.

2.10 INSULATING FLANGED JOINTS

Each insulating flange set shall consist of a full-face central gasket, a full length sleeve for each flange bolt, and two insulating washers with two steel washers for each bolt. The ring type central gasket shall be 1/8" thick sheet packing, having a high dielectric constant. Bolt sleeves shall be plastic (polyethylene) and insulating washers shall be constructed of fabric reinforced phenolic resin. The complete assembly shall have an ANSI pressure rating equal to that of the flanges between which it is installed.

2.11 CASINGS FOR WATER MAINS

Steel casings utilized for boring and jacking for water mains shall be smooth steel pipe conforming to AWWA C200, fabricated in sections for welded field joints and be the size shown on the Plans. Field joints shall be full circumferencial welded butt joints.

2.12 CASING INSULATORS

Insulators utilized for electrical isolation shall be 12" wide, two-piece steel band type. Each insulator shall have an insulating liner with a thick retainer type edge to isolate the steel bands from the carrier pipe. Insulating runners shall be 1" wide steel capped with molded rubber or

polyester fiberglass. Insulator spacing shall be determined by the Contractor according to manufacturer's recommendations for each pipeline alternate and approved by the Engineer. The outside diameter of the casing insulator skids shall be sufficient height to isolate all portions of the carrier pipe from the casing.

2.13 CASING END SEALS

After installation of the carrier pipe and sand is blown to fill the annular space, the ends of the casing shall be sealed. End seals shall be pull-on type, S-shaped, constructed of 1/8" minimum highly flexible synthetic rubber. Each end seal shall be furnished with two 1/2", 14-gauge stainless steel bands for banding the seal to the casing and carrier pipe.

2.14 EPOXY COATINGS

Epoxy coatings for fittings when required in the project Plans and Specifications shall be 8 mils minimum thickness fusion epoxy and shall be subjected to thickness and discontinuity (holiday) testing at the discretion of the Engineer. The application of the coating and preparation of the substrate shall be in accordance with the manufacturer's recommendations.

2.15 PORTLAND CEMENT CONCRETE

Portland cement concrete for hydrant bases; thrust blocks and anchors shall conform to the requirements of Section 90, "Portland Cement Concrete," of the Standard Specifications and specified herein. The concrete shall be Class "B" containing six (6) sacks of Portland cement per cubic yard of concrete. The grading of the combined aggregate shall conform with the requirements of three quarter inches (3/4") maximum. The addition of calcium chloride for high early strength concrete shall not be permitted. See Section 90, "Portland Cement Concrete," of the Standard Specifications for required slump.

2.16 BITUMASTIC

Bitumastic for coated couplings, rods, fittings and joints shall conform to the requirements of Bureau of Reclamation Specification CA-50.

2.17 TRACER WIRE

Tracer Wire for all pipes shall be RHW #12 AWG solid, taped to the top of the water main with 12” min. slack inside all valve boxes. For connection to existing trace wires, place wires in water-proof direct bury wire connector, 3M #9756 or bulk pack #dbr-6.

2.18 POLY WRAP

Poly Wrap shall be 8 mil low-density or 4 mil high-density polyethylene film installed per AWWA Standard C105. Purple poly wrap shall be used for recycled water pipes.

2.19 PIPE MARKING TAPE

3” width, 4 mil, non-detectable
- For potable water mains and services, use blue tape.
- For recycled water mains and services, use purple tape.

2.20 NUTS, BOLTS & WASHERS

Use 316 stainless steel bolts, nuts, and washers for all bolted connections. Bolts shall be Type 316 stainless steel, Class 2, conforming to ASTM A193 for bolts and ASTM A194 for nuts.

2.21 CHLORINE

Hypochlorite shall conform to AWWA Standard B300.

2.22 MISCELLANEOUS SERVICES

Material for water services shall comply with the Water Department Standard Drawings.

2.23 APPROVAL OF EQUIVALENTS

If materials other than those specified on the Plans or these Specifications are to be considered, a description, including manufacturer's specifications, shall be supplied to the Engineer or Water Department Inspector for evaluation. Only those materials which are compatible with the existing water system and have the City’s written approval will be allowed.

3.0 CONSTRUCTION METHODS

Trench excavation, backfill, imported bedding material, imported backfill, drainage and water, pavement replacement shall be as specified in Section 02062: FURNISHING AND INSTALLING PIPE of the Technical Provisions except that there shall be four inch minimum sand bedding in the bottom of the trench and a minimum of twelve inches of sand over the top of the water pipe.

The Contractor shall give two (2) working days' notice to the City's Water Department when making connections to existing water facilities. At all times, the manipulation of existing valves shall be done by City Water Department personnel.

3.1 HANDLING OF MATERIALS

Water pipe, fittings, hydrants and valves must be carefully handled at all times. Only suitable and proper equipment and appliances shall be used for the safe loading, hauling, unloading, handling and placing of materials. Special care shall be exercised so that the coating on pipe, valves and fittings will not be damaged. If such damage should occur, the coating

shall be repaired to the satisfaction of the Engineer or Water Department Inspector. Chain slings will not be permitted. Pipe loaded on trucks or stacked one upon another shall be supported on wooden blocking. Pipe handled on skidway shall not be skidded or rolled against pipe already on the ground.

3.2 PIPE LAYING

All pipes shall be laid to conform to AWWA Standards C600 and C603. All pipes shall be laid true to line and grade as shown on the Plans or as directed by the Engineer to pass existing obstructions. Before any length of pipe is laid, it shall be carefully inspected for defects. No pipe or other material which is cracked or shows other defects shall be installed.

Clearances

A. One foot minimum vertical clearance between water and recycled water mains and services and other facilities unless otherwise noted on the plans.

B. Ten feet minimum horizontal clearance between water and recycled water mains and services and sanitary mains and services and trees.

C. Five feet minimum horizontal clearance between water and storm mains and laterals and other general utilities or facilities.

All pipe valves and fittings must be carefully wiped out and cleaned, as they are being laid so that no earth or rubbish may become lodged inside. Every open end of installed pipe shall be capped or plugged with an approved fitting at all times when work is suspended, at the close of the workday and as directed by the Engineer or Water Department Inspector.

Pipe must be given a solid, uniform bearing in the bottom of the trench. Blocking or supporting pipe on earth mounds will not be permitted. Whenever it is necessary to use a short length of pipe at a fitting or valve, the minimum length shall be thirty-two inches (32"). If it is necessary to cut pipe, said cut shall be made with an approved pipe cutter.

No deflection will be permitted at joints where water pipe is joined to cast iron fittings or valves. In all other cases, deflections will be permitted up to the maximum allowed by the manufacturer's recommendation.

A minimum of type RHW insulated #12 AWG solid copper wire shall be installed in the trench with non-metallic pipe and spliced to any existing tracer wire. For connection to existing trace wires, place wires in water-proof direct bury wire connector, 3M #9756 or bulk pack #dbr-6. The wire shall be insulated and shall be laid along the top of the pipe. The wire shall be installed so that there is no direct contact between the copper and any other metal in the trench.

3.3 JOINTS

All joints shall be assembled to conform to AWWA Standards C600 and C603. All joints shall be water tight and shall be made by competent workers. Unless otherwise specified on the Plans or in these Specifications, joints may be of any of the types listed below which are consistent with the type of pipe being used, except that joints shall in no case be caulked with cement.

3.4 WORKING INVOLVING ASBESTOS-CEMENT PIPE

Field cutting and machining operations involving asbestos-cement pipe shall be in compliance with OSHA Asbestos Standards.

Power-driven saws and abrasive discs shall not be used for the dry cutting or beveling of asbestos-cement pipe.

Pressure or "wet" tapping of asbestos-cement pipe shall be positive purge, blowoff or other type that allows pipe cuttings to be flushed from the pipe.

3.5 MECHANICAL JOINTS

The last eight inches (8") of the outside of the spigot and inside of the bell of mechanical joints shall be thoroughly cleaned of all foreign material. Mechanical joints shall be installed according to the manufacturer specifications.

3.6 SETTING VALVES, FITTINGS AND HYDRANTS

Gate valves shall be set with stems in vertical position and provided with valve boxes. Gate valves shall be anchored as shown on the Plans or the Water Department Standard Drawings.

Fire hydrants and fire hydrant connections shall be installed where indicated on the Plans, except where the Engineer directs that they shall be relocated to avoid an obstruction. The Contractor shall make such relocations at the time of reconstruction and without additional compensation. Each hydrant shall be installed in accordance with the Water Department Standard Drawings for hydrants or as shown on the Plans.

3.7 CONNECTION TO EXISTING MAINS

The Contractor shall make connections to existing mains where indicated on the Plans. The newly installed facilities are to be kept isolated from the City system until bacteriologically acceptable. If isolation is provided by a closed gate valve, pressure testing for leakage in the new facilities shall only be conducted after bacteriological acceptance.

The Engineer shall designate method and sequence of connecting to existing mains to minimize contamination danger. Connections to existing valves prior to obtaining satisfactory leakage and pressure tests of the new facilities shall be at the Contractor's risk.

The City will assume no responsibility for the water tightness of existing valves.

Service in existing mains can be interrupted only upon authorization of the Engineer, who will specify time and duration of the outage. The Contractor shall notify all affected users in writing at least forty-eight (48) hours in advance of service interruption using printed forms provided by the City. The Contractor shall notify the City's Water Department personnel at least four (4) business days in advance to schedule valve closing for service interruption. Manipulation of new or existing valves shall only be done by City Water Department personnel.

3.8 AIR RELIEFS AND BLOWOFFS

Air relief and blowoff assemblies shall be located as shown on the Plans and installed in accordance with the Water Department Standard Drawings.

3.9 PAINTING

All metals anodic to ductile iron that are not adequately protected against corrosion by a suitable protective coating shall be carefully cleaned and given a suitable protective coating of a good quality bitumastic coating. This coating shall be allowed to cure before the material is covered with polyethylene wrap or backfill material.

All valves, flexible coupling adapters, and flexible couplings shall be fusion epoxy coated pursuant to Section 2.14 and shall be subjected to thickness and discontinuity (holiday) testing at the discretion of the Engineer.

Bolts, nuts, washers, and any other metallic elements exposed to the soil shall be coated with bitumastic in accordance with Paragraph C-20, entitled "Bitumastic", of these Standard Provisions.

3.10 THRUST BLOCKING OR JOINT THRUST RESTRAINTS

Thrust blocks and anchor blocks shall conform to the Water Department Standard Drawings or as directed by the Engineer or Water Department Inspector. The Contractor shall be required to install thrust blocking in addition to the use of joint thrust restraints.

3.11 INSULATING FLANGED JOINTS

All insulating components of the insulating flanged gasket set shall be cleaned of all dirt, grease, oil and other foreign materials immediately

prior to assembly. Bolt holes in mating flanges shall be properly aligned at the time bolts and insulating sleeves are inserted to prevent damage to the insulation. After flanged bolts have been tightened, each insulating washer shall be inspected for cracks or other damage. All damaged washers shall be replaced. After assembly, resistance between each bolt and flange shall be measured with an approved ohmmeter, and the minimum resistance shall be 50,000 ohms. Where the insulating joint is assembled in the shop and shipped as a unit, resistance shall be measured in the shop between the flanges and between each bolt and flange, and shall meet the above requirements. All insulating flanged joints shall be coated as shown on the Water Department Standard Drawings and specified herein.

3.12 PRESSURE TESTS

Each run of pipe between two (2) sectionalizing valves or between a valve and a cap or plug or as directed by the Engineer shall be tested for leakage. Only one (1) run of pipe shall be tested at a time, but the pressure may be applied through sections of pipe already tested. Services and fire hydrant runs may be tested individually or with the sections of water main. It is the intention of these tests to test the water tightness of the closed gate valves as well as the piping.

The Contractor shall furnish all necessary equipment and labor to perform the pressure tests.

The hydrostatic test pressure shall be two hundred (200) pounds per square inch, based on the elevation of the lowest point of the section under test and corrected to the elevation of the test gauge.

The test pressure shall be maintained for not less than two (2) hours. No pressure drop is permissible. The Contractor shall at his own expense take whatever steps are necessary to eliminate the leakage, after which the test shall be repeated as often as necessary until acceptable results are obtained.

3.13 DISINFECTING AND FLUSHING WATER LINES

Disinfecting of the completed work, including all pipelines, valves, and fittings, shall be performed by the Contractor, who will supply all materials, equipment, supplies and labor required for the operation. The required concentration of chlorine throughout the main is fifty (50) parts per million. The pipe line shall be disinfected in accordance with AWWA Standards B300 and C651, and as specified as follows:

A. LIQUID CHLORINE SOLUTION METHOD

Flush all foreign matter from mains, branch runs, hydrant runs and installed services. Introduce liquid chlorine solution at appropriate locations to assure uniform distribution through the facilities at the proper concentration. The sanitizing solution shall be retained in

the facilities for a period of twenty-four (24) hours, after which each service, hydrant run, branch run and dead end shall be flushed until the residual chlorine is less than one (1) part per million or is no greater than the concentration of chlorine in the water supplied for flushing.

B. HTH TABLET METHOD

Tablets are to be fastened to the inside top surface of each length of pipe using a food-grade adhesive at time of pipe laying. Tablets shall not be available at any time for casual pilferage by the general public or by children. The new facilities are to be slowly filled with water. Air is to be exhausted from each dead end, branch run, hydrant run and installed service. Retain water for a period of twenty-four (24) hours, after which each service, hydrant run, branch run and dead end shall be thoroughly flushed to clear foreign matter and until the residual chlorine concentration is less than one (1) part per million or is no greater than the concentration of chlorine in the water supplied for flushing.

It shall be unlawful to discharge any chlorinated water from the flushing operations into any storm drain or natural outlet or channel without a valid National Pollution Discharge Elimination System permit. The Contractor shall discharge the chlorinated water into a sanitary sewer manhole or other approved opening in a City sanitary sewer collection system. No person shall discharge any liquid having a pH lower than six (6) or more than twelve and one-half (12.5) into the sanitary sewer system.

3.14 BACTERIOLOGICAL TESTING

Samples shall be gathered and tests conducted by City. Samples shall be taken at representative points as required by the Engineer.

The new facilities shall remain isolated and out of service until satisfactory test results have been obtained which meet the requirement of the California Department of Public Health and the Engineer has accepted the results as indicative of the bacteriological condition of the facilities. If unsatisfactory or doubtful results are obtained from the initial sampling, the disinfection process shall be repeated until acceptable test results are reported. The follow-up sampling costs shall be borne by the Contractor.

END OF SECTION

SECTION 02071SP

WATER MAINS AND SERVICES

The paragraphs indicated herein of Section 02071 of the Standard Specifications shall not be modified or deleted, but shall be supplemented as follows:

Add to paragraph 2.1 the following:

Approved Pipe Manufacturers:

1. US Pipe
2. Or approved equal

Add to paragraph 2.3 the following:

"Pressure rating of fittings shall be equal to or greater than that of adjoining pipe."

Add to paragraph 2.4 the following:

Manufacturers:

1. Mueller
2. Or approved equal

Add paragraph 2.24 as follows:

2.24 BUTTERFLY VALVES

A. General: Butterfly valves shall be Class 250 and shall conform to ANSI/AWWA C504, subject to the following requirements. Valves shall be of the size and class indicated. Flanged valves shall have ANSI 125-lb standard split-V type packaging, or other acceptable seal. The interior passage of butterfly valves shall not have any obstructions or stops. The rubber seats shall be EPDM elastomer and shall be positively clamped or bonded into the body of the valve, but cartridge-type seats which rely on a high coefficient of friction for retention shall not be acceptable.

B. Test each valve under test pressure equal to twice its design water-working pressure, unless specified otherwise. Leak test each valve at 150 psi for class 150B valves and 250 psi for class 250B valves.

C. All butterfly valves shall have certification as a complete valve for the NSF-61 standard and shall also include certification for the Annex G portion of NSF-61 or the equivalent NSF-372 certification.

D. Manual Actuators: All buried valves shall be equipped with a 50 mm [2 in] square actuating nut. All valves 350 mm [14 in] and larger shall be equipped with a position indicator. All valves shall open counter-clockwise.

E. Electric Motor Actuators: where called out in the plans, shall be provided in accordance with Section 15119 – Electric Motor Actuators.

F. Lining and Coating: All ferrous surfaces of the valves body shall be lined and coated with 20 mils minimum high solids epoxy.

G. Polyethylene wrap shall be used for buried installation of butterfly valves.

H. Manufacturers (non-buried valves):

1. Henry Pratt Company (HP250II Series)
2. Mueller Corporation (Lineseal XP)
3. Or approved equal

I. Manufacturers (buried valves):

1. Henry Pratt Company (Groundhog Series)
2. Or approved equal

Add to paragraph 3.2 the following:

"Follow manufacturer's instructions for installation, pipe cutting, pipe restraint and maximum joint deflection."

Replace the last paragraph of 3.9 with the following:

"Bolts, nuts, washers, and any other metallic elements exposed to the soil shall be coated with bitumastic in accordance with Section 2.16, entitled "Bitumastic"."

END OF SECTION

SECTION 02073

PORTLAND CEMENT CONCRETE CURB, GUTTER, SIDEWALK, WALKWAY, CURB RAMP, AND DRIVEWAY

1.0 GENERAL

1.1 DESCRIPTION

This item shall consist of constructing Portland Cement Concrete Curbs, Gutters, Sidewalks, Walkways, Curb Ramps, Driveways and other miscellaneous work as required by the Contract Documents. The work shall conform to the Standard Details and Section 73 of the Standard Specifications, insofar as it is applicable.

Sidewalk, curb and gutter sections shall be poured monolithically unless otherwise provided for in the Contract Documents or allowed by the Engineer. All work shall utilize fixed forms except that curbs, curb and gutter, sidewalks and monolithic sidewalk, curb and gutter sections may be placed using slip forms or extrusion machines with the approval of the Engineer. Refer to Subsection 1.6, Protection of Public and Private Property, and Subsection 1.16, Traffic Control, of Section 01500, Temporary Facilities and Controls, and Section 02007, Storm Water Pollution Prevention.

2.0 MATERIALS

2.1 PORTLAND CEMENT

Unless otherwise specified in the Contract Documents, all cement used shall be of one brand, be Type II Modified, and shall conform to ASTM C150. Results from certified tests, made by a recognized testing laboratory, shall be furnished by the cement manufacturer on request of the Engineer.

2.2 PORTLAND CEMENT CONCRETE

Concrete mix designs shall be submitted to the Engineer for approval a minimum of one week in advance of use. If the concrete supplier has a City approved mix design on file, the contractor must provide documentation indicating the supplier and the mix number at least twenty-four (24) hours in advance of use. Unless otherwise noted in the Contract Documents, Portland cement concrete shall be Class 2 concrete with Type II Modified cement conforming to Section 90 of the Standard Specifications. All cementatious material shall be Portland cement. A mix design shall be submitted for approval whenever the slip form/extrusion processes is to be used.

A. POURED IN PLACE CONCRETE

The combined aggregate grading for poured in place Portland cement concrete shall be one inch (1") maximum as noted in Section 90 of the Standard Specifications.

B. SLIP FORM/EXTRUDED CONCRETE

Concrete placed using either the slip form or extrusion methods shall have an air entraining agent added during mixing in an amount to produce from five percent (5%) to eight percent (8%) air by volume in the mixed concrete.

2.3 AGGREGATES

A. POURED IN PLACE CONCRETE

Aggregates for concrete shall conform to Section 90 of the Standard Specification. Combined aggregate grading shall conform to the one inch (1") maximum requirements of Section 90-3.04 of the Standard Specifications.

B. SLIP FORM/EXTRUDED CONCRETE

The combined aggregate for concrete placed by either the slip form or extrusion method shall conform to the following gradation:

Sieve Size	3/8" Maximum (Pea Gravel) Percentage Passing
1/2"	100
3/8"	85 - 100
No. 4	60 - 80
No. 8	40 - 60
No. 16	25 - 40
No. 30	15 - 25
No. 50	6 - 16
No. 100	1 - 5
No. 200	0 - 2

The above grading limits shall be further restricted if necessary to produce concrete that after extrusion has well defined web marks of water on the surface and is free from surface pits larger than three-sixteenths inch (3/16") in diameter.

2.4 REINFORCING STEEL

Reinforcing steel shall conform to Section 52 of the Standard Specifications.

2.5 WATER

Water for use in concrete mixes shall conform to Section 90-2.03 of the Standard Specifications. Water for sub-grade and cushion shall be from the City's potable water system, recycled water system, or another approved source. To use the City's potable/recycled water, the contractor must obtain a water meter from the City Water and Sewer Utility and arrange payment for water used. Recycled water may be available through the City Water and Sewer Utility.

2.6 ADMIXTURES

No admixtures, accelerators, or retarders shall be allowed without the express approval of the Engineer unless required in the Contract Documents. Submittals for use of admixtures, including a mix design incorporating the admixture, shall be made a minimum of one (1) week in advance of the actual use.

2.7 AGGREGATE BASE

Base material shall be Class 2 Aggregate Base in accordance with Section 02026, Aggregate Base.

2.8 EXPANSION JOINTS

Expansion joints shall consist of prepared strips of three-eighths inch (3/8") thick premolded joint filler conforming to the specifications of ASTM Designation D 1751.

3.0 CERTIFICATE OF COMPLIANCE

Contractor shall furnish to the Engineer a Certificate of Compliance signed by the supplier of the plant mix concrete. Certificate of Compliance shall state that the concrete furnished complies in all respects with the requirements of the Contract Documents. A Certificate of Compliance shall be furnished with each lot of material delivered to the work and the lot so certified shall be clearly identified in the Certificate.

4.0 CONSTRUCTION METHODS

4.1 SUBGRADE PREPARATION

The existing material shall be excavated to the required depth per the Contract Documents. The finished sub-grade immediately prior to placing subsequent material thereon shall have a relative compaction of ninety percent (90%) for a depth of six inches (6") as determined by ASTM Test Method No. 2922. The sub-grade shall be smooth and true to the required grade conforming to Section 02019, Earthwork. Immediately prior to the placement of aggregate base, the compacted sub-grade shall be thoroughly moistened with water to the satisfaction of the Engineer. Ponded water shall not be permitted.

4.2 AGGREGATE BASE CONSTRUCTION

Aggregate Base shall be spread on a prepared sub-grade in conformance with the lines, grades and dimensions required in the Contract Documents. Aggregate Base shall be installed to the depths indicated on the plans or if not specifically shown on the plans, to the depths indicated in the City of Santa Clara Standard Details. Aggregate Base shall be compacted to no less than ninety-five percent (95%) relative compaction. Immediately prior to placement of concrete, the Aggregate Base shall be thoroughly moistened to the satisfaction of the Engineer. Ponded water shall not be permitted.

Where existing concrete sections are to be replaced, the existing Aggregate Base may be reused subject to approval of the Engineer. Additional excavation and additional material may be required to bring the Aggregate Base to the required thickness.

4.3 FIXED FORMS

Forms shall be smooth on the side placed next to the concrete, and shall have a true smooth upper edge and shall be sufficiently rigid to withstand the pressure and tamping of fresh concrete without distortion. Timber forms shall be free from warping or deformation.

All forms shall be thoroughly cleaned and coated with form oil to prevent the concrete from adhering to them.

The depth of forms for back of curbs shall be equal to the depth of the curb. The depth of face forms for concrete curbs shall be equal to the full face height of the curb. Forms shall be set carefully to alignment and grade and shall be held rigidly in place by stakes, spreaders, or clamps, and shall be braced so that no displacement will occur during the working of the concrete. For other than short radius curves, timber forms shall be nominal two inch (2") stock.

All concrete placements shall be confined and no neat (earth confined) concrete placement shall be allowed. Concrete placement against existing asphaltic concrete paving shall not be allowed unless approved by the Engineer.

4.4 PLACEMENT

All Portland Cement Concrete shall be used while fresh and before it has taken an initial set. Placement shall be in accordance with Section 90 of the Standard Specifications unless otherwise provided in the Contract Documents. Re-tempering any partially hardened concrete with additional water or by vibration, shall not be permitted.

Concrete shall be placed continuously between joints and brought to the required grade and section as the work progresses. Sidewalk and top of curb sections shall slope towards the street at a cross slope of 0.25 inch per foot (2% maximum slope) unless otherwise specified in the Contract Documents or directed by the Engineer. Sections not complying with said cross slope shall be removed and reconstructed as directed by the Engineer. Concrete shall be consolidated by vibrating and/or tamping.

4.5 JOINTS (CURB & GUTTER)

Expansion joints shall be installed at each side of structures, at the ends of curb returns, and at locations specified in the Contract Documents. Weakened plane joints shall be constructed at ten feet (10') maximum intervals. Weakened plane joints shall be cut to a minimum depth of one inch (1") with a tool that leaves corners rounded and insures free movement of drain water across the joint. Weakened plane joints shall have a minimum width of one-eighth inch (1/8") and shall not exceed three-eigths inch (3/8"). Weakened plane joints and score marks shall be installed when the concrete is still plastic. Saw cutting after the concrete sets will not be allowed unless specifically called for in the contract documents.

4.6 JOINTS (SIDEWALK)

Expansion joints shall be constructed at all returns and opposite expansion joints in adjacent curb. Where curb is not adjacent, expansion joints shall be constructed at intervals of sixty feet (60'), and at locations specified in the Contract Documents. Weakened plane joints shall be constructed at ten feet (10') maximum intervals and opposite weakened plane joints in adjacent curb. Joints shall be constructed at right angles to the line of the curb or radially on curves and curb returns and to the same depth and width as for curbs and gutter.

Score lines shall be constructed at five feet (5') intervals at right angles to the line of curb or radially for curves and curb returns. For sidewalk eight feet (8') or over in width, a score line parallel to the line of curb shall be constructed midway between back of curb and back of walk.

Score lines shall be made with a scoring tool that will make a rounded line of uniform maximum width and depth of three-eighths inch (3/8”). A score line parallel to the face of curb shall be constructed parallel to and six inches (6”) from the face of curb.

4.7 CONTACT JOINTS

Contact Joints shall be used where concrete is to be poured adjacent to existing concrete or where cold joints are created due to breaks in the concrete pouring sequence. Reinforcing steel dowels are to be imbedded in holes drilled into the existing concrete using epoxy. See City of Santa Clara Standard Details for additional requirements for Dowel Connections.

4.8 TOLERANCE

The top and face of curbs and gutter and the surface of sidewalks shall not vary more than one-fourth inch (1/4”) from the edge of an eight feet (8’) straight edge when placed against the surface, except at grade changes or curves. The flowline of gutters shall be built and finished to allow continuous flow of water and shall be tested with water prior to initial concrete set so that it does not stand more than one-fourth inch (1/4”) deep at any location prior to final finishing. In no case will standing water be allowed in the flow line of the landing of a curb ramp.

4.9 FINISH

Fresh concrete shall be struck off and compacted until a layer of mortar has been brought to the surface. The surface shall be finished to grade and cross section with a float, troweled smooth with no rock pulls, and finished with a broom. The broom finish and texture of the concrete shall be a light to medium finish as approved by the Engineer. Concrete adjacent to expansion joints shall be finished with an edger tool. Brooming of sidewalk and top of curb shall be transverse to the line of traffic. Brooming of gutters shall be in the direction of flow. Finish of curb ramps shall be as indicated in the Contract Documents.

4.10 CURING

Curing of exposed concrete surfaces shall use curing compound in accordance with Section 90-7.07 of the Standard Specifications and shall be applied in accordance with manufacturer's specifications. Water curing will not be allowed except with the approval of the Engineer.

4.11 SIDEWALK AND CURB LETTERING

A. CONTRACTOR'S NAME

The Contractor shall stamp his name and the date of pour on the curb or sidewalk at intervals of approximately four hundred feet (400'), or as directed by the Engineer. The location is to be approved by the Engineer prior to stamping. The letters shall not be smaller than three-fourth inch (3/4") in height and sunk to a depth of not less than one-fourth inch (1/4").

B. SEWER LATERAL MARK

The Contractor shall stamp a block letter "S" on face of curb at all points along the work where sewer laterals intersect the face of curb. The block letter "S" shall not be smaller than two inches (2") of height and indented to a depth of not less than one-fourth inch (1/4"). The letter "S" shall be spaced carefully and evenly so that the center point of the letter shall be equidistant from top of curb and flow line of gutter.

4.12 DRIVEWAYS

Driveways shall be constructed at locations indicated in the Contract Documents or as directed by the Engineer. If new driveways are to be constructed in the public right-of-way where private driveways exist, the centerlines and width of both shall agree unless directed by the Engineer. Driveway construction shall comply with City Standards and regulations. The Contractor shall notify the Engineer before starting work.

4.13 SLIP FORM/EXTRUDED CURBS

Curb (Type B) and Curb and Gutter (Type A) sections of the Standard Detail (Concrete Median Curbs) may be placed using a slip form or an extrusion machine, except on structures, provided the finished curb is true to the required cross section, line and grade and the concrete is dense and has the required surface texture. Refer to Section 73-1.05B of the State Standard Specifications except as provided herein. The same requirements that are provided in this Subsection 4.0 above for subgrade preparation, joints, tolerance, finish, curing, lettering, etc. shall apply.

In advance of placing Type B curbs on existing pavement, steel dowels shall be inserted into holes drilled in the pavement and secured with epoxy as provided in the Contract Documents. If allowed by the Engineer, the curb may be attached to the pavement using epoxy conforming to 95-2.03 of the State Standard Specifications.

Extruded curbs to be constructed on epoxy shall be placed on the applied adhesive according to the manufacturers recommendation or not more than thirty (30) minutes after the start of mixing the two components, whichever is less, and shall be applied to the full width of the base of the curb and to the thickness recommended by the manufacturer or as directed by the Engineer.

4.14 SLIP FORM/EXTRUDED CURB, GUTTER AND SIDEWALK SECTIONS

Construction of sidewalk or curb and gutter or monolithic curb, gutter and sidewalk sections by either the slip form or extrusion method will only be permitted if provided in the Contract Documents or if allowed by the Engineer. The finished concrete must be true to the required cross section, line and grade and the concrete must be dense and have the required surface texture. The same requirements that are provided above in this Section 4.0 for subgrade preparation, joints, tolerance, finish, curing, lettering, etc., shall apply. Pours using the Slip Form/Extrusion processes shall stop at driveways, curb ramps, catchbasins, utility boxes, etc. and as directed by the Engineer. Concrete at these locations shall be placed using fixed forms. Where pours are not continuous, a contact joint shall be constructed as indicated in this Section 4.0.

5.0 REPAIR OF CRACKS

5.1 REPAIRS PRIOR TO ACCEPTANCE

Cracks developing in concrete work prior to it being accepted shall be repaired as directed by the Engineer, at the Contractor’s expense, using the following method:

A. The sidewalk flag(s), curb, and gutter affected by cracking shall be sawed through along existing score marks, weakened plane or expansion joints surrounding the affected area, and as marked for replacement by the Engineer. On sidewalks with a centerline score mark, the sidewalk will be replaced to its full width (from back of walk to back of curb). The entire damaged sections shall be broken out and removed from the work. Prior to replacing the concrete, aggregate base shall be removed from under the edges of the adjacent concrete to provide space for the fresh concrete to "key" under them. Steel dowels, in the number and configuration acceptable to the Engineer, shall be placed using epoxy adhesive. The replacement concrete shall match the existing concrete in grade and texture and shall conform to this Section 5.0.

B. An alternative procedure may be used only if approved by the Engineer. In such cases, the cracks shall be filled with a concrete bonding agent, approved by the Engineer. The bonding agent shall be applied under pressure in order that full penetration of the crack is insured. After setting, the filled cracks shall be stoned smooth so as to present a smooth unbroken surface.

No neat (earth confined) pours shall be allowed. Pours against existing asphalt pavement will be allowed only upon approval of the Engineer.

5.2 REPAIRS DURING GUARANTY PERIOD

The following procedures shall be used for the repair of cracks developing in concrete during the one-year guarantee period as defined in Subsection 9, Warranty, Guaranty, and Inspection of Work, of Document 00700, General Conditions.

The Contractor shall meet with the Engineer at the jobsite to determine the repairs to be made and to determine if it is required to obtain a permit from the City. The Engineer shall be notified to inspect the proposed work at the following stages:

A. Prior to the sawing and removal of the affected sections.

B. Prior to placing aggregate base.

C. After installation of forms for grade and alignment and prior to replacing concrete.

D. Prior to replacement of concrete.

All repairs shall be made as those done prior to acceptance (per 5.1 above).

All work shall be done in accordance with the Contract Documents and at no cost to the City.

6.0 MEASUREMENT AND PAYMENT

All work involved in furnishing and constructing curbs, curb and gutter, sidewalks, driveways, curb ramps, etc. shall be at the units of measurement shown in the Contract Documents. Payment for concrete shall be made at the bid price per unit of measure for the item and includes all costs of furnishing, placing, curing of concrete, and all incidentals thereto. Unless otherwise provided, saw cutting, removal and replacement of existing facilities, dowel installation, reinforcing steel installation, sub-grade preparation, and furnishing and placing of aggregate base are included in the cost paid for the item. Curbs and curb and gutter sections shall be paid for by the lineal foot and sidewalks and driveways shall be paid for by the square foot unless otherwise provided in the Contract Documents. Other miscellaneous concrete will be paid for as indicated in the Contract Documents.

If separate payment is provided for in the Contract Documents for aggregate base, it shall be at the bid price per ton in place and shall include all the costs of furnishing and placing aggregate base, sub-grade preparation, compaction of aggregate base and all incidentals thereto.

Payment made at the bid price per unit of measure shall include full compensation for furnishing all labor, materials, tools, equipment, and incidentals, and for doing all the work involved in constructing concrete curbs, curb and gutter, sidewalks, walkways, driveways, curb ramps, etc. complete in place, as required by the Contract Documents and as directed by the Engineer.

END OF SECTION

SECTION 02083

REDWOOD HEADERS AND BARRICADES

1.0 GENERAL

1.1 DESCRIPTION

Redwood Headers shall be constructed where indicated in the Contract Documents or as directed by the Engineer. Headers are to be used in the ground adjacent to pavement, in landscape areas or other areas as required.

2.0 MATERIALS

2.1 REDWOOD HEADER

Lumber for headers shall be construction grade redwood, rough cut, from sound timber, and shall be straight and free from loose or unsound knots, shakes in excess of one-third (1/3) the thickness of the lumber, splits longer than the thickness of the lumber or other defects which would render the lumber structurally unfit for the purpose intended. Knots in all lumber shall be sound, tight well spaced and shall not exceed two inches (2”) in size on any face. Unless indicated otherwise on the plans, Headers for straight and long radius sections shall be two by six inch (2”x6”), rough cut nominal lumber size. Where curves are too tight for two inch (2”) nominal size lumber, three (3) layers of one-half inch (1/2”) redwood bender board shall be used.

Header board stakes shall be of the same material as the header and shall be free of loose or unsound knots with no knot exceed one-half inch (1/2”) in size. Unless indicated otherwise, stakes shall be two by two inch (2”x2”), rough-cut nominal lumber size and eighteen inches (18”) in length.

2.2 FASTENERS

All nails and bolts shall be hot-dip galvanized. Nails shall be a minimum of 12-penny, common hot-dip galvanized. Nails shall not be so large as to split either the stake or the header when being driven.

Bolts shall be hot-dipped galvanized lag bolts three-eighths by five inch (3/8”x5”) for barricade lumber and one-fourth by one and one-half inch (1/4”x1-1/2”) for attaching reflectorized signs. A hot-dipped galvanized washer shall be placed under each bolt head.

3.0 CONSTRUCTION

3.1 REDWOOD HEADERS

Boards shall be twelve feet (12') in length and shall be placed so they are flush with the pavement with a tolerance of +/- ¼ inch. In landscape areas the header shall be placed so it is one inch (1") above finished grade or as indicated in the Contract Documents. Where curves have to small a radius for two inch (2") nominal lumber, three (3) layers of one-half inch (1/2") bender board shall be used.

Stakes shall be attached with a minimum of two (2) nails per stake, driven flush with the top edge of the header board and beveled away from the header board at a forty-five degree (45°) angle. Stakes shall be placed at each end of the board and at four feet (4') on center. Where bender board is used, stake spacing shall be a minimum of three feet (3') on center but close enough to maintain a smooth curve.

4.0 MEASUREMENT AND PAYMENT

All work involved in furnishing and constructing Redwood Headers will be measured and paid for by the lineal foot complete in place, unless otherwise specified in the Contract Documents.

Payment made at the bid price per unit of measure shall include full compensation for furnishing all labor, materials, tools, equipment, and incidentals, and for doing all the work involved in constructing Redwood Headers, complete in place, as required by the contract documents and as directed by the Engineer.

END OF SECTION

SECTION 02084

TRAFFIC STRIPES, PAVEMENT MARKINGS, AND PAVEMENT MARKERS

1.0 GENERAL

1.1 DESCRIPTION

This work shall consist of applying painted and thermoplastic traffic stripes and pavement markings, and furnishing and placing pavement markers at the locations shown on and in conformance with the Contract Documents or as designated by the Engineer.

2.0 PLANS AND SPECIFICATIONS

2.1 Unless otherwise specified, the work embraced herein shall conform to:

A. The Contract Documents.

B. The appropriate details of the Standard Details.

C. The appropriate specifications of the Standard Specifications insofar as the same may apply.

D. The appropriate plans of the Standard Plans.

2.2 In the event of apparent conflicts between the Standard Specifications, the Standard Plans, the Standard Details, or the Contract Documents, those requirements, as determined by the Engineer, which gives the greatest protection to the City or result in the best installation shall govern.

3.0 TRAFFIC STRIPING, PAVEMENT MARKING, AND PAVEMENT MARKERS

3.1 GENERAL

Traffic stripes and pavement markings shall conform to the applicable provisions of Section 84, Traffic Stripes and Pavement Markings, of the Standard Specifications, Standard Plans, the latest California Manual on Uniform Traffic Control Devices (California MUTCD), and the Contract Documents. Pavement markers shall conform to the provisions of Section 85, Pavement Markers, of the Standard Specifications, Standard Plans, the latest California MUTCD, and the Contract Documents.

All traffic stripes and pavement markings on existing surfacing shall be removed by grinding prior to placement of asphaltic concrete overlay, slurry seal, chip seal, or cape seal.

Attention is directed to the Subsection 1.16, Traffic Control, of Section 01500, Temporary Facilities and Controls, regarding the use of moving lane closures during placement of pavement markers with bituminous adhesive.

Locations indicated to receive thermoplastic or painted traffic stripes and pavement markings shall be pre-marked by the Contractor per the striping plans. Prior to placement of striping materials, the City Traffic Foreman will confirm pre-marking. The Contractor shall coordinate all efforts to insure that the striping installation conforms to the Contract Documents. Chip seal markers, if required for temporary delineation, shall be provided by the Contractor.

The Contractor is required to coordinate the painted or thermoplastic striping and pavement marker installation schedule through the City Inspector with the City Traffic Foreman. The City Inspector and the Contractor shall arrange for a member of the City Traffic Field Crew to be present at all times during the painting or thermoplastic application and installation of pavement markers.

Where new striping joins existing striping, as shown on the Plans, the Contractor shall begin and end the transition from the existing striping pattern into or from the new striping pattern a sufficient distance to ensure continuity of the striping pattern.

Drips, overspray, improper markings, and paint and thermoplastic material tracked by traffic shall be immediately removed from the pavement surface by methods approved by the Engineer. All this removal work shall be at the Contractor’s expense.

Newly placed traffic stripes and pavement markings shall be protected from damage by public traffic or any other causes until the thermoplastic material is thoroughly set or the paint is thoroughly dry.

Potential delays due to paving operation problems are the Contractor’s responsibility. Any costs related to coordination problems are considered incidental and shall not be a justification for extra work reimbursements.

A. THERMOPLASTIC TRAFFIC STRIPES AND PAVEMENT MARKINGS

1. Materials

Spreadable thermoplastic material shall be free of lead and chromium, and shall conform to the requirements in Standard Specification PTH-02ALKYD. Sprayable thermoplastic material shall be free of lead and chromium, and shall conform to the requirements in Standard Specification PTH-02SPRAY.

Glass beads shall conform to the State Specification No. 8010-004 (Type II).

2. Application

Thermoplastic pavement markings and traffic stripes for traffic lanes shall be applied at a minimum thickness of 2.0 mm and minimum application rate of 0.4 kg/m, based on a solid stripe of 100 mm width. Thermoplastic traffic stripes and pavement markings for bicycle facilities and shoulder stripes shall be spray-applied and shall be applied at a minimum thickness of 1.0 mm and a minimum rate of 0.2 kg/m, based on a solid stripe of 100 mm width.

Thermoplastic material shall be applied to the pavement at a temperature between 177°C and 205°C, unless a different temperature is recommended by the manufacturer.

Thermoplastic traffic stripes and pavement markings shall be free of runs, bubbles, craters, drag marks, stretch marks, and debris.

B. PAINTED TRAFFIC STRIPES AND PAVEMENT MARKINGS

1. Material

Paint shall be waterborne-based only. Acetone-based paint is not allowed. Thinning of paint will not be allowed.

Glass beads shall conform to the State Specification No. 8010-004 (Type II).

The Contractor shall furnish the Engineer certificates of compliance for the paint in conformance with the provisions in Section 6-1.07, Certificates of Compliance, of the Standard Specifications.

2. Application

Painted traffic stripes and pavement markings shall only be used in creek trails or parking lots, and as designated by the Engineer.

C. PREFORMED THERMOPLASTIC PAVEMENT MARKINGS

Preformed pavement markings must be a resilient white or yellow thermoplastic product with uniformly distributed glass beads throughout the entire cross sectional area. The markings must be resistant to the detrimental effects of motor fuels, lubricants, hydraulic fluids, antifreeze, etc. Lines, legends and symbols are capable of being affixed to bituminous and/or Portland cement concrete pavements by the use of the normal heat of a propane torch.

The markings must be capable of conforming to pavement contours, breaks and faults through the action of traffic at normal pavement temperatures. The markings shall have resealing characteristics, such that it is capable of fusing with itself and previously applied thermoplastic when heated with the torch.

The markings shall not have minimum ambient and road temperature requirements for application, storage, or handling.

1. Material

The markings must be composed of an ester modified rosin resistant to degradation by motor fluids, lubricants etc. in conjunction with aggregates, pigments, binders and glass beads which have been factory produced as a finished product, and meets the requirements of the latest edition of the Manual on Uniform Traffic Control Devices for Streets and Highways. The thermoplastic material should conform to AASHTO designation M249, with the exception of the relevant differences due to the material being supplied in a preformed state.

1.1 Graded Glass Beads

The material must contain a minimum of thirty percent (30%) intermixed graded glass beads by weight. The intermixed beads shall be conforming to AASHTO designation M247, with minimum 80% true spheres and minimum refractive index of 1.50.

The material must have factory applied coated surface beads in addition to the intermixed beads a rate of 1 lb. (± 10%) per 10 sq. ft. These factory applied coated surface beads shall have a minimum of 90% true spheres, minimum refractive index of 1.50, and meet the following gradation.

Size Gradation		Retained, %	Passing, %
US Mesh	µm		
12	1700	0-2%	98-100%
14	1400	0-3.5%	96.5-100%
16	1180	2-25%	75-98%
18	1000	28-63%	37-72%
20	850	63-72%	28-37%
30	600	67-77%	23-33%
50	300	89-95%	5-11%
80	200	97-100%	0-3%

1.2 Pigments

1.2.1 White: The material shall be manufactured with sufficient titanium dioxide pigment to meet FHWA Docket No. FHWA-99-6190 Table 5 and Table 6 as revised and corrected.

1.2.2 Red, Blue, and Yellow: The material shall be manufactured with sufficient pigment to meet FHWA Docket No. FHWA-99-6190 Table 5 and Table 6 as revised and corrected. The yellow pigments must be organic and must be heavy-metal free.

1.2.3 Other Colors: The pigments must be heavy-metal free.

1.3 Heating indicators: The top surface of the material (same side as the factory applied surface beads) shall have regularly spaced indents. These indents shall act as a visual cue during application that the material has reached a molten state so satisfactory adhesion and proper bean embedment has been achieved and a post-application visual cue that the installation procedures have been followed.

1.4 Skid Resistance: The surface, with properly applied and embedded surface beads, must provide a minimum resistance value of 45 BPN when tested according to ASTM E 303.

1.5 Thickness: The material must be supplied at a minimum thickness of 90 mils (2.29 mm).

1.6 Environmental Resistance: The material must be resistant to deterioration due to exposure to sunlight, water, salt or adverse weather conditions and impervious to oil and gasoline.

1.7 Retroreflectivity: The material, when applied in accordance with manufacturer's guidelines, must demonstrate a uniform level of sufficient nighttime retroreflection when tested in accordance to ASTM E 1710. The applied material must have an initial minimum intensity reading of 500 mcd/(m^2·lx) for white and 300 mcd/(m^2·lx) for yellow.

2. Application

2.1 Asphalt: The materials shall be applied using the propane torch method recommended by the manufacturer or a City- approved infrared heater. The material must be able to be applied without minimum requirements for ambient and road temperatures and without any preheating of the pavement to a specific temperature. The material must be able to be applied without the use of a thermometer. The pavement shall be clean, dry and free of debris. Supplier must enclose application instructions in English and Spanish with each box/package.

2.2 Portland Cement Concrete: The same application procedure shall be used as described under Section 2.1. However, a compatible primer sealer shall be applied before application to assure proper adhesion.

3. Preformed pavement markings in bicycle lanes and paths

The thermoplastic material in preformed pavement markings for use in bicycle lanes and paths should conform to AASHTO designation M249-79 (98), with the exception of the relevant differences due to the material being supplied in a preformed state.

3.1 Graded Glass Beads

The material must contain a minimum of thirty percent (30%) intermixed graded glass beads by weight. The intermixed beads shall be clear and transparent. Not more than twenty percent (20%) consists of irregular fused spheroids, or silica. The index of refraction shall not be less than 1.50.

The material must have factory applied coated surface beads and abrasives in addition to the intermixed beads at a rate of ½ lb. (± 20%) per 11 sq. ft. The surface beads and abrasives must be applied so that every other shaped portion contains glass beads, or abrasives with minimum hardness of 7 (Mohs scale). These factory applied coated surface beads shall have the following specification:

1) Minimum 80% rounds
2) Minimum refractive index of 1.5
3) Minimum SiO2 Content of 70%
4) Maximum iron content of 0.1%

Size Gradation		Retained, %	Passing, %
US Mesh	µm		
12	1700	0-2%	98-100%
14	1400	0-6%	94-100%
16	1180	1-21%	79-99%
18	1000	28-62%	38-72%
20	850	62-71%	29-38%
30	600	67-77%	23-33%
50	300	86-95%	5-14%
80	200	97-100%	0-3%

3.2 Skid Resistance: The surface of the preformed retroreflective marking materials, wherein every other shaped portion contains glass beads, or abrasives with a minimum hardness of 7 (Mohs scale), shall upon application provide a minimum skid resistance value of 60 BPN when tested according to ASTM E 303.

3.3 Thickness: The material must be supplied at a minimum thickness of 90 mils (2.29 mm).

3.4 Retroreflectivity: The preformed retroreflective marking materials upon application shall exhibit adequate and uniform nighttime retroreflectivity. The marking materials shall have the following retroreflectivity:

White preformed reflective marking materials – minimum of 275 mcd/(m^2·lx).

3.4 Environmental Resistance: The material must be resistant to deterioration due to exposure to sunlight, water, salt, and adverse weather conditions, and be impervious to oil and gasoline.

3.5 Abrasives: The material must have factory applied surface abrasives, wherein every other shaped portion contains glass beads, or abrasives with a minimum hardness of 7 (Mohs scale).

D. PAVEMENT MARKERS

1. Material

Raised pavement markers shall be retroreflective and shall be 3M type 290 series or approved equal and marked as abrasion resistant on the body of the markers.

The Contractor shall furnish the Engineer certificates of compliance for the pavement markers in conformance with the provisions in Section 6-1.07, Certificates of Compliance, of the Standard Specifications.

4.0 MEASUREMENT AND PAYMENT

Thermoplastic or painted traffic stripes will be measured by the linear foot along the line of the traffic stripes, without deductions for gaps in broken traffic stripes. A double traffic stripe, consisting of two 100-mm wide yellow stripes, will be measured as one traffic stripe. Pavement markings will be measured by the square foot for each marking. The quantity of pavement markers will be measured as units determined from actual counts in place.

The contract prices paid per linear foot for traffic stripes and by square foot for pavement markings shall include full compensation for furnishing all labor, materials, tools, equipment and incidentals, and for doing all the work involved in applying thermoplastic and painting traffic stripes and pavement markings (regardless of the number, widths, and patterns of individual stripes involved in each traffic stripe) complete in place, including establishing alignment for stripes and layout work, as shown and specified in the Contract Documents, as specified in the Standard Specifications, and as directed by the Engineer.

The contract unit prices paid for raised pavement marker shall include full compensation for furnishing all labor, materials, tools, equipment and incidentals, and for doing all the work involved in furnishing and placing pavement markers, complete in place, including adhesives, and establishing alignment for pavement markers, as shown and specified in the Contract Documents, as specified in the Standard Specifications, and as directed by the Engineer.

END OF SECTION

SECTION 02086

SIGNALS, LIGHTING, AND ELECTRICAL SYSTEMS

1.0 GENERAL

1.1. GENERAL DESCRIPTION OF WORK

This work shall consist of traffic signal installation as provided in the Contract Documents. The performance of a complete job in all respects as indicated by the Plans and the Specifications and as directed by the Engineer is required.

2.0. PLANS AND SPECIFICATIONS

2.1 Unless otherwise specified, the work embraced herein shall conform to:

A. The Contract Documents.

B. The appropriate details of the Standard Details.

C. The appropriate specifications of the Standard Specifications insofar as the same may apply.

D. The appropriate plans of the Standard Plans.

2.2 In the event of apparent conflicts between the Standard Specifications, the Standard Plans, the Standard Details, or the Contract Documents, those requirements, as determined by the Engineer, which gives the greatest protection to the City or result in the best installation shall govern.

3.0 ACCESS TO ACTIVE CONTROLLER CABINET

No access to an active traffic signal controller cabinet or associated equipment is allowed unless a Silicon Valley Power (SVP) technician or Traffic Division Engineer is present, at the intersection, to monitor the operation of the traffic signal.

4.0 MATERIALS

4.1 LOOP DETECTOR PROTECTION AND INSTALLATION

The Contractor shall take precautions to ensure that trenching operations to install conduit do not cut existing loop detector conductors embedded in pavement. Either of the following methods may be used by the Contractor to avoid loop conductors:

1. New conduit may be routed to pull boxes where loop conductors terminate. The existing loop termination pull boxes shall be replaced by No. 6 pull boxes.

2. New conduit may be routed under loop conductors if possible without disturbing the loop conductors.

If existing loop conductors are cut or damaged by the Contractor's operations, they shall be replaced to their original condition and original configuration at the Contractor's expense. Contact the SVP traffic personnel at least forty-eight (48) hours before trenching for exact location of existing loop conductors.

If existing loop conductors will be replaced by new loop conductors, contact SVP traffic personnel and Traffic Operations at least 48 hours prior to any trenching or sawcutting to allow for the deactivation of the existing loops and signal timing adjustments. All contact with the SVP traffic personnel and Traffic Operations and shall be made through the City's Public Works Inspector.

New loop installation shall be in accordance with Section 86 of the Standard Specifications. Type 1 loop wire shall be used along with Type B lead-in cable (86-5.01A (4)). Installation shall conform to Section 86-5.01A (5) of the Standard Specifications. Sealant shall be Hot-Melt Rubberized Asphalt.

No loops shall be installed until pre-marking has been verified by City Traffic Operations.

Detector loops shall be laid out by the Contractor. Location of detector loops will be verified and approved by City Traffic Operations prior to start of loop saw-cutting. A minimum of 2 Working Days notice is normally required for loop verification. Verification of loop location(s) must be scheduled through the City's Public Works Inspector.

Loops located in the vehicle lanes are to be cut in a modified 6x6 Quad configuration on the traffic lane center marks approved by City personnel unless otherwise noted. Loop wiring is to be wrapped in a 3-6-3 configuration. Each individual loop will have its wiring brought into the proper pull box for connection to Type B detector lead-in cable (DLC).

Loop wiring in street shall enter a detector hand hole box to be installed at lip of gutter at transition from street to conduit. When requested or needed temporarily, soft patch asphalt material is to be applied at lip of gutter street excavation where loop wiring enters conduit. Soft patch is to be tamped so no settling of material will occur and finished at street level.

The Contractor shall test each detector loop as they are installed. Acceptable testing results for each individual loop pair shall be 124 micro-henries inductance and infinite meg-ohms to ground. Values of the test results for loop inductance shall vary no more than ±5 percent (± 6 micro-henries). No loop wiring is to be connected to a DLC until tested and approved by SVP traffic personnel. Any detector loop that fails to meet acceptable testing results shall be replaced immediately at no additional cost to the City.

The Contractor shall provide the City with the detector loop test results in the form of a detector loop test report. The report shall include the readings for the loop detectors installed in the field. The following information shall be provided for every detector loop the Contractor installs.

1. Phase number the detector loop will service.

2. Lane Number the detector loop is in.

3. Type of detector loop (presence or advanced)

4. Location (in lane from stop bar).

5. Meg-ohms reading.

6. “L”: Inductance Reading

7. “R”: Resistance Reading

8. “Q”: Quality factor reading/calculation

9. Initials of Person performing Test.

10. Date test was made.

To aid in the clarification, of the location of the detector loop, being tested, the following guidelines shall be used: The lane closest to the center of the roadway is the #1 Lane. The loop closest to stop bar will be labeled “A” the second loop in the lane will be labeled “B” the third loop in the lane will be labeled “C” and the fourth loop in the lane will be labeled “D”. Loops shall be grouped on the test report first by phase number (1-8) then by lane (1-6) and then by location in the lane (A-D), or as directed by the Engineer.

A blank “Detector Loop Test Results” form is located at the end of this Section 02086.

The City may verify the test results submitted. If more than two loops fail to match the passing test results, submitted by the Contractor, the Contractor is required to retest all loop detectors. Any detector loop that fails to meet acceptable testing results shall be replaced immediately at no additional cost to the City. The City may charge up to $500 per unacceptable loop per occurrence for damages and retesting.

No loop wiring is to be connected to a DLC until tested and approved by SVP traffic personnel.

Any traffic loop wire connection(s) shall be “C” tapped, soldered, and covered with waterproof heat shrink. See Section 4.4, “CONDUCTORS AND WIRING”. Butt splices may be allowed with previous approval from the Traffic Engineer.

All DLC forked connectors to be laid down in signal cabinet shall be soldered. DLC shield conductors inside cabinet are **not** to be bonded to ground but wrapped around and secured to its respective owner. They are not to be shorter than six inches (6”).

For projects that include new asphalt concrete overlay at the intersection, all new detector loops shall be in place before final asphalt concrete paving surface is applied. Contractor shall not be allowed to cut into the final paving surface to install new detector loops. Contractor may be charged up to $1,000 per loop for cutting into the final paving surface.

4.2 PULL BOXES

Pull boxes shall conform to all applicable specifications in Section 86-2.06, Pull Boxes, of the Standard Specifications and this Section 02086.

Pull boxes shall be No. 6 unless otherwise directed by Engineer or noted in the Contract Documents. Pull boxes larger than No. 6 shall be equipped with lightweight polymer concrete covers. Covers shall not weigh more than 120 pounds. Covers may be constructed in two pieces to maintain a maximum weight per section of 120 pounds. Pull boxes shall be installed at the locations shown on the plans or as directed by the Engineer. Existing pull boxes, which are damaged, shall be replaced. Pull boxes shall be installed no closer than six inches (6”) to the nearest score mark on existing sidewalk. The bottoms of pull boxes shall be bedded in a minimum of six inches (6”) of crushed rock. A minimum of one inch (1”) of grout shall be placed on top of the crushed rock within the pull box and trowelled smooth prior to the installation of cable/wire. A layer of roofing paper shall be placed between the grout and the crushed rock sump. A one inch (1”) diameter drain hole shall be provided in the center of the pull box through the grout and the roofing paper. The grout shall be sloped to drain toward the drain hole in the center of the box.

Unless otherwise noted on the plans or directed by the Engineer all pull box covers on this job shall be marked “CSC Traffic Signal” or “CSC Interconnect”. Pull box covers are to be non-securing without holes for locking hardware. Pull box extensions will be installed as determined necessary in the field or as directed by the Engineer.

Conduits shall enter through the side of pull boxes from the direction of the run unless otherwise specified on plans. Conduit shall be sloped slightly toward the top of box to facilitate pulling of cable. Each conduit terminating in a pull box shall be grouted to the pull box prior to cable installation.

4.3 BONDING AND GROUNDING

Bonding and grounding shall conform to the specifications in Section 86-2.10, Bonding and Grounding, of the Standard Specifications and this Section 02086. Metal conduit shall be made electrically secure to form a continuous system, and shall be effectively grounded using ground rod and ground clamp at pull boxes at intervals of not more than 500 feet. Bonding and grounding jumpers shall be copper wire or copper braid. PVC/HDPE conduits shall have continuous bare #8 solid copper wire installed in conduit and grounded to ground rod. Grounding jumper shall be attached by a 3/16-inch or larger brass bolt in the standard or pedestal and shall be run to the conduit or a ground rod in adjacent pull box. Grounding rod for the controller cabinet shall be placed in the pull box next to the controller cabinet.

4.4 CONDUCTORS AND WIRING

Contractor shall not damage existing conductors or conductor insulation. With the exception of detector lead-in cable, if an existing conductor or any conductor insulation is damaged, Contractor shall install a new conductor from the existing controller cabinet to the new pull box and connect to the existing traffic control system. If a loop detector lead-in cable is damaged, Contractor shall install and connect a new detector lead-in cable from the existing controller cabinet to the terminus of the existing field loop wires.

Unless previously approved methods are approved by City Traffic Engineer all connections in pull boxes are to be “C” tapped, soldered, and covered with waterproof heat shrink. All heat shrink shall be Thomas & Betts Shrink-kon HS Series or City-approved equal.

All wiring shall be labeled as to their function in each and every pull box with Partex PK cable markers or City-approved equal.

Signal cabinet ground rod is to be installed inside first main pull box closest to cabinet, not in cabinet foundation.

Safety lighting on signal poles shall not have wiring fused in pull box nor require any additional electrical protection other than power panel circuit breaker.

No more than two (2) field wires are to be laid down on an empty terminal. All field wiring shall have soldered lugs.

A. Wiring

When new conductors are to be added to existing conductors in a conduit, all conductors shall be removed; the conduit shall be cleaned as provided in Section 86-2.05C of the Standard Specifications, and both old and new conductors shall be pulled into the conduit as a unit.

Cable shall be spliced and insulated to provide a watertight joint and to prevent absorption of moisture by the cable. A cast insulation of self-curing epoxy resin, which is compatible with wire insulation, shall be poured to form a moisture-resistant joint into molds of dimensions suitable for the splice. The resin shall be resistant to weather, aromatic and straight chain solvents and shall not sustain combustion.

All traffic signal field wiring shall be solid copper THW with 600 volt PVC 45 mil insulation thickness minimum. All traffic signal field wiring shall be meggared at 500 V by Contractor and results given to traffic engineering.

B. Disturbed Wiring

All disturbed wiring with existing splices shall be soldered and re-spliced. Splices shall be soldered with a soldering iron (no propane torches shall be used) and a resin-core solder acceptable to the Engineer.

4.5 INTERCONNECT CABLE

A minimum of three feet (3') of slack shall be provided for 25-pair interconnect cable in controller cabinets.

All new interconnect cable shall be fixed with identification bands in pull boxes and near termination points. Identification bands shall indicate that the cable is "INTERCONNECT" and the direction in which the cable is traveling (North-South or East-West).

Splices of interconnect cable shall be enclosed within PVC chambers. Splices to the interconnect cable shall be performed by the City, but Contractor is responsible for providing watertight seal on cable ends prior to cable splicing.

4.5.1 WIRING AND SPLICING

Wiring shall conform to the appropriate specifications in Section 86-2.09, Wiring, of the Standard Specifications and this Section 02086.

A minimum of eight feet of slack shall be provided for each 25-pair or 12-pair cable in pull boxes where splices occur. Where cable is looped through pullboxes (not spliced), the loop shall consist of a minimum of eight feet of cable.

4.5.2 CABLE TESTING

Cable testing shall be performed by the Contractor before final acceptance of the Project is given by the City. Individual pairs shall be tested for continuity within the system. All cable installed shall be tested in the presence of the Engineer. Any individual pair which is found to be electrically discontinuous within the system must be repaired before final acceptance is given by the City.

Cable testing shall conform to the following:

1. Each pair shall be tested for loop resistance and result recorded
2. Branching cable to be tested from one end to each outer branch and result recorded for each individual pair
3. A 500V megger shall be used to obtain megger reading of each pair to ground and result recorded
4. All recorded results shall be submitted to the Engineer before final acceptance is given.

4.6 VIDEO VEHICLE DETECTION SYSTEM

4.6.1. DESCRIPTION. This work shall consist of furnishing and installing video vehicle detection system(s) at the locations indicated in the Plans and as directed by the Engineer.

The work under this Section shall be performed in accordance with these provisions, the Plans, and the Standard Specifications.

4.6.2. SYSTEM REQUIREMENTS. The video vehicle detection system shall include the camera with zoom lens and the integrated machine vision processor in one compact unit, with internal heater and integrated adjustable sunshield, all mounting hardware (video detector camera mounting bracket or video detector camera pole mount extension bracket), the communications interface panel, the detector port master, video detector cable, all associated equipment or miscellaneous fittings (cabinet wiring), and all labor, materials, and equipment required to complete the installation and make the video detection system fully operational. All of the video detection system components shall be current production equipment produced by the same manufacturer (for system operation compatibility purposes) unless otherwise noted herein or approved in advance by the Engineer.

The video vehicle detection system shall be an Econolite Autoscope Encore or previously approved equal.

4.6.3. SUBMITTALS.

(a) Fabrication Drawings. The Contractor shall submit Fabrication Drawings.

(b) Documentation Requirements. Three (3) advance copies of equipment manuals furnished by the manufacturer shall be submitted to the Engineer. The Engineer will verify the manufacturer's equipment manual as part of the test and integration process. The equipment manual incorporating the Engineer's corrections and comments shall be integrated by the Contractor into the operations and maintenance manual. The manual shall, as a minimum, include the following:

(1) Complete and accurate schematic diagrams.

(2) Complete installation and operation procedures.

(3) Complete performance specifications (functions, electrical, mechanical, and environmental) of the unit.

(4) Complete accurate troubleshooting, diagnostic, and maintenance procedures.

4.6.4. CONSTRUCTION REQUIREMENTS. All work associated with Video Vehicle Detection System shall be completed prior to activation of the video detection system.

The Contractor shall make the necessary changes to the signal equipment to integrate the video vehicle detection system into the signal control operation. The Contractor shall be responsible for furnishing all training, labor, materials, cables, connectors, tools, equipment, shipping, and incidental items necessary to complete the installation and make the video vehicle detection system fully operational.

Installation of the video vehicle detection system shall include the installation of any and all associated equipment, including, but not limited to, the following:

(a) Video Detector Camera Assembly with Integrated Machine Vision Processor (MVP). The Contractor shall furnish one (1) Integrated Machine Vision Processor module per approach and all associated enclosures and incidental work necessary to complete the installation and make the video vehicle detection system fully operational. This will also require providing the Integrated Machine Vision Processor Comm Server configuration software, all miscellaneous hardware, connectors, and documentation.

(b) Video Detector Communications Interface Panel (CIP). The Contractor shall furnish one (1) Video Detector Communications Interface Panel per cabinet and incidental work necessary to complete the installation and make the video vehicle detection system fully operational.

(c) Video Detector Port Master. The Contractor shall furnish one (1) Video Detector Port Master per cabinet and incidental work necessary to complete the installation and make the video vehicle detection system fully operational.

(d) Video Detector Cable. The Contractor shall furnish the specified cable type, all connectors, sealing tape, and incidental work necessary to compete the installation of the Video Detector Cable between the Video Detector Camera Assembly with Integrated Machine Vision Processor and the Video Detector Communications Interface Panel in the traffic control cabinet, and make the video vehicle detection system fully operational.

(e) Video Detector Camera Mounting Bracket. The Contractor shall furnish one (1) Video Detector Camera Mounting Bracket per Video Detector Camera and all associated equipment, labor, materials, tools, and incidental work necessary to attach the camera mounting bracket to a mast arm or camera extension bracket, complete the installation, and make the video vehicle detection system fully operational.

Video Detection System Hardware

	Qty	Hardware
Per Approach as specified	1	MVP camera
	1	Mounting brackets (model AMBKTM11S) std 10”
	FT	3 conductor, 18AWG Polyethylene Jacketed-CSA rated conduit rated power cable. Length to be determined homerun from controller cabinet to each camera with 10’ slack in each pullbox.
Per Intersection	1	Terra Interface Panel
	1	Cat5e network patch cable RJ45 Male to RJ45 Male Cat5 Length 3’
	1	Terra Access Panel
	1	ASTCBL10 – Terra Interface Panel cable
	1	SDLC cable (model ACBLP0E05 P/N 33550G5) for TS2 connection to the controller
	1	NTSC Monitor with BNC interfaces for signal cabinet
		Five (5) years System warranty from of date of acceptance

When Video Detection System is to be used in a NEMA TS1 cabinet, the following additional equipment shall be supplied.

	Qty	Hardware
Per Intersection	1	Model 33457G57 for logic inputs (33x)
	1	ASTCBL12 – Terra Interface Panel cable and I/O for 24 outputs in place of ASTCBL10 – Terra Interface Panel cable

Installation

Camera shall be placed to minimize occlusions of left turn lanes. Occlusions can be minimized by installing the camera on the signal mast arm, in line with the lane striping between the left turn lane and the through lanes. Cameras installed on signal mast arm shall use a manufacturer supplied (City pre-approved) 28" extended camera mount. At intersections where the left and through movements go together as standard operation and left turn movements are not protected, the camera can be mounted on a luminaire arm with standard camera mounting bracket.

Camera shall be aimed so that the area of detection is in the top half of the video image. Typically the farthest away detector shall be at the top of the image, and at least four (4) cars shall be visible behind the stop line, in the top half of the video image. No horizon shall be allowed in the video image.

Video detection system installed in traffic signal cabinets with network switches installed or scheduled to be installed shall use NEMA TS2 connections to controller. Contractor shall connect SDLC (model ACBLP0E05 P/N 33550G5 or approved equal) to connect TIP and the traffic signal controller. Contractor shall work with the Econolite Representative and the City of Santa Clara staff to insure that all channels are programmed and detection calls are being inputted into the controller.

Video detection system installed in traffic signal cabinets without network switches installed shall use NEMA TS1 and logic level connections to controller. Contractor shall wire in MVP Wiring Harness (model 33457G57 or approved equal) into traffic signal controller cabinet. Contractor shall work with the video detection camera system manufacturer's representative and the City of Santa Clara staff to insure that all channels are programmed and detection calls are being inputted into the controller.

The Contractor shall install the Camera/Integrated machine Vision Processor System (MVP) to achieve the desired field of detection as shown on the Plans or as directed by the Engineer. All equipment shall be installed and wired in a neat and orderly manner in conformance with the manufacturer's instructions. The camera shall be affixed to the support structure in accordance with the manufacturer's instructions to provide the optimal field of detection.

Video detection camera locations shown on the Plans are for illustration purposes only.

The Contractor shall perform a site survey with a representative of the manufacturer of the video vehicle detection system at all project locations. The purpose of the survey shall be to optimize the performance of the video vehicle detection equipment when it is installed at the various overhead and side-fired mounting locations and ensure that it will meet the accuracy requirements specified herein. The results of this survey shall be submitted to the Engineer in a report which lists all locations with any recommended location shifts, sensor mounting adjustments, camera angle lens adjustments, and desired detection zone locations. The cost of the site survey, including the use of a bucket truck or other method to obtain an elevated vantage point, shall be included in the cost for each intersection's respective video vehicle detection system pay item.

Cable to be installed in conduit shall be pulled with a minimum of dragging on the ground or pavement. This shall be accomplished by means of reels mounted on jacks or approved devices conveniently located for unreeling cable directly into the conduit. Powdered soapstone, talc, or other approved lubricants shall be used when inserting cable into the conduit. Cable shall be pulled through conduit by means of a cable or cables. Wiring within junction boxes and cabinets shall be neatly arranged.

When conductors and cables are pulled into conduits, all ends of conductors and cables shall be taped to exclude moisture, and shall be so kept until they are attached to the Camera/Integrated Machine Vision Processor (MVP) and the Video Detector Communications Interface Panel (CIP) in the traffic controller cabinet.

Conductors entering the traffic controller cabinet shall be neatly dressed and laced along the base and back of the traffic cabinet to the Video Detector Communications Interface Panel. Spare conductors (if any) shall be tied together with their ends taped. At least five feet (5') of slack shall be left for each conductor in the traffic controller cabinet at the Video Detector Communications Interface Panel.

Routing of the Video Detector Cable shall provide a drip loop for protection of the camera and connector.

4.7 SIGNAL FACES AND SIGNAL HEADS

Signal faces, signal heads, and auxiliary equipment as shown on the plans, and the installation thereof, shall be manufactured by Econolite Product Inc., Eagle Traffic Control Systems, or approved equal, and shall conform to the specifications in Sections 86-4.01 Vehicle Signal Faces, 86-4.01C Visors, 86-4.01D Light Emitting Diode Signal Module, 86-4.01E Backplates, 86-4.02 Programmed Visibility Vehicle Signal Faces, 86-4.03 Pedestrian Signal Faces, 86-4.03I Light Emitting Diode Pedestrian Signal Modules, and 86-4.04 Signal Mounting Assemblies of the Standard Specifications and this Section 02086. Vehicle signal heads shall be twelve inch (12") diameter and shall be IntelliLED Hi-Flux tinted lens, incandescent appearance, type LED's manufactured by Dialight Corporation or a City-approved equal meeting ITE specs. Vehicle signal housings shall be either die-cast or permanent mold-cast aluminum conforming to ANSI Standard D-10.1. Signal door fasteners shall be wing nuts with screw threads. Visors shall be of the full circle variety. Finish of signal heads and back plates shall be flat black.

Rubber gaskets are to be installed inside of head at top with metal flat washer between gasket and chase nipple.

Mast arm wiring for each signal head is to be brought into nearest at grade pull box for splicing/connection. No parallel electrical connections between heads.

Signal heads are to be installed vertically level in all directions except with special permission from the Traffic Engineer.

4.8 SIGNAL STANDARDS AND POSTS

Signal standards as shown on the plans, and the installation thereof, shall conform to the specifications in Section 86-2.04, Standards, Poles, Steel Pedestals and Posts, of the Standard Specifications and this Section 02086. Foundations for signal standards and posts shall conform to Section 86-2.03, Foundation, of the Standard Specifications, the Standard Plans, and this Section 02086. Excavation and backfilling for foundation shall conform to Section 86-2.01, Excavation and Backfilling, of the Standard Specifications. Final location shall be approved by the Engineer.

4.9 PEDESTRIAN SIGNALS AND PUSHBUTTONS

4.9.1 PEDESTRIAN PUSHBUTTONS

Pedestrian pushbuttons shall be Type B color black with large button model ADA compliant "Bulldog" type manufactured by Polara Engineering Inc., or a City-approved equal.

4.9.2 AUDIBLE PEDESTRIAN SIGNALS

Audible pedestrian signals shall be Novax DS-100 Series or approved equal. The audible pedestrian signals shall be installed per manufacturer specifications at locations noted on plan. The audible pedestrian signals shall be installed to emit "cuckoo" or "peep peep" as noted on plans.

4.9.3 PEDESTRIAN SIGNAL

Pedestrian signal shall be uniform appearance countdown signal manufactured by Dialight Corporation model 430-6479-001X or approved equal.

4.10 CONDUIT

Conduit shall conform to all applicable specifications in Section 86-2.05, Conduit, of the Standard Specifications and this Section 02086. All new conduits on this project shall be galvanized schedule 40 steel or schedule 80 HDPE unless otherwise specified in the Plans. All conduits inside pull boxes shall be bonded together with approved NEC methods. Insulating bonding bushings will be required on metal conduit. Each conduit terminating in a pull box shall be grouted to the pull box prior to conductor installation. After conductors have been installed, the ends of conduits terminating in controller cabinets shall be sealed with an approved type of sealing compound. All conduits shall have mule tape made of durable, non-rotting fiber, installed and tied securely in each pull box.

Conduit runs in roadway sections, where drilling or jacking is not specified, shall be in a trench approximately two inches (2”) wider than the outside diameter of the conduit(s). Trench width shall not exceed eight inches (8”) and a minimum depth of cover of eighteen inches (18"). The outline of all areas of pavement to be removed shall be cut with an abrasive-type saw or with a rock-cutting excavator specifically designed for this purpose. Cuts shall be neat and true with no shatter outside the removal area.

The conduit shall be placed two inches (2”) above the bottom of the trench on blocks made of material suitable for the purpose. The trench shall be backfilled on the same Working Day with either controlled density fill or commercial quality Portland Cement Concrete containing no less than 564 pounds of Portland cement per cubic yard of concrete. Backfilling shall be to the finished grade. Calcium chloride admixture shall not be used in concrete that will be in contact with metal conduit. The top two inches (2”) of trench shall be removed and backfilled with commercially produced asphaltic concrete within a period of 5 Working Days. Trench in Roadway should be per the Standard Details.

Conduit runs in other areas shall be provided with a minimum of eighteen inches (18”) coverage from finished grade. A minimum two inches (2”) of sand shall encase each conduit run.

Existing conduits to be re-used shall be cleaned with a mandrel or cylindrical wire brush and blown out with compressed air. Conduit to be abandoned shall have all wiring removed then it shall be capped at each end.

Conduits between signal cabinet, AC power enclosure, and their respective first pull box shall be sealed on both ends with approved duct seal.

5.0 SALVAGE MATERIAL

All salvaged material shall be placed on pallets or as otherwise directed by the Engineer and returned to the City Corporation Yard, 1705 Martin Avenue, Santa Clara, CA 95050. Material shall be handled with care and be returned to the City in good condition.

6.0 SERVICE

Service shall conform to the specifications in Section 86-2.11, Service, of the State Specifications and the City Electrical Code. All applicable permits shall be obtained prior to construction.

The Contractor shall contact the City Building Department (1-408-615-2400) for a minimum of two electrical inspections: 1) The first inspection shall be scheduled so that the City Building Inspector may observe the installation of conduits. 2) Second inspection shall be scheduled after installation of cabinet and breaker enclosure, conduits, conductors, and splices. All electrical inspections shall be scheduled at least two working days prior to time of requested inspection.

7.0 COMMUNICATIONS BOXES

Communications Pull Box, cover and extension shall be made of reinforced monolithic polymer concrete material. The minimum dimensions for communications pull box shall be thirty inches by forty-eight inches by twenty-four inches (30” x 48” x 24”). Reinforced polymer concrete Pull Box shall have two (2) piece detachable covers that have skid-resistant surfaces. The cover shall have lift slots to aid in the removal of the lid.

Contractor shall install communications pull boxes unless otherwise directed by the Engineer. Pull boxes shall be installed at the locations shown on the plans; the locations may be changed to suit field conditions with permission from the Engineer. The bottoms of pull boxes shall be bedded in crushed rock and shall be grouted according to Section 86-2.06C, Installation and Use, of the Standard Specifications. Pull box extensions may be installed as determined necessary in the field with permission from the Engineer.

Conduits shall enter through the side of pull boxes from the direction of the run unless otherwise specified on plans. Conduit shall be sloped slightly toward the top of box to facilitate the pulling of cable. Each conduit terminating in a pull box shall be grouted to the pull box prior to cable installation.

8.0 TS2 – TYPE 1 CONTROLLER CABINET EQUIPMENT LIST AND DRAWINGS

GENERAL
Equipment list and drawings of electrical and material shall conform to the specifications in Section 86-1.04, Equipment List and Drawings, of the Standard Specifications and this Section 02086.

The supplier shall furnish a maintenance manual for all supplied equipment, including but not limited to, the following:

(a) Vehicle detector sensor control units and amplifiers.
(b) Malfunction Management Unit (MMU)

The maintenance manual shall be submitted at the time the cabinet(s) are delivered for testing or, if ordered by the Engineer, previous to purchase. The maintenance manual shall include, but need not be limited to, the following items:

(a) Specifications
(b) Function of all controls
(c) Trouble shooting procedure (Diagnostic routine)
(d) Block circuit diagram
(e) Geographical layout of components
(f) Schematic diagrams
(g) List of replaceable component parts with stock numbers and list of industry standard replacements

In addition to the five (5) sets of cabinet schematic wiring diagrams as specified in the second paragraph of Section 86-1.04, Equipment List and Drawings, of the Standard Specifications, the supplier shall furnish one reproducible wash-off-mylar or erasable vellum for each cabinet, which shall be easily readable, of each cabinet schematic wiring diagram. The supplier shall also provide a CD or DVD with an electronic AutoCAD 2009.dwg version of the cabinet drawing. All wiring on the drawings shall be double ended.

8.1 TS2 CABINET ASSEMBLY

8.1.1 This specification describes the minimum acceptable requirements for a TS2 cabinet assembly to house a TS2 Type 1 solid state fully-actuated controller unit. The manufacturer of the cabinet assembly shall have a minimum of two (2) years of cabinet manufacturing experience with TS2 Type 1 cabinets. The assembly shall include the cabinet, flasher, card rack(s), a MMU, five (5) BIU's, external power supply, six (6) flash transfer relays, Twelve (12) Reno A&E E/2 single width four channel detector amplifiers, Actelis ML688 copper over Ethernet unit, Actelis ML530 fiber switch. Cabinet assemblies shall be configuration 4 (16 position). The assembly shall include sixteen (16) load switches.

8.1.2 The cabinet assembly shall be tested and operated as a complete working unit prior to submittal to the City. This test shall consist of full operation under a full signal load for a minimum of two (2) hours.

8.2 Cabinet Design Requirements

8.2.1 The cabinet shall be constructed using unpainted sheet aluminum with a minimum thickness of 3.2 mm (0.125”). No wood, wood fiber products, or other flammable material shall be used in the cabinet. All welds shall be by GMAW process and shall be neat and of uniform consistency. No external rivets shall be present on the door or cabinet assembly. The surface of the aluminum shall be finished with Anodic coating as per Section 86-3.04A, Cabinet Construction, of the Standard Specifications. Coating shall have uniform appearance.

8.2.2 The profile of the cabinet shall be size 6 as defined by TS2 Clause 7.3 of the NEMA Standard Publication TS2 latest revision, as specified in the Plans. The load bay shall be configuration 4 (16 position) as defined by TS2 Clause 5.3, or as specified in the Plans.

Cabinet Option	Size of Cabinet	Backpanel Config	Size of Load Bay
Option 4	Base Mount TS2 Size 6	Configuration 4	16 position load bay

8.2.3 Vertical shelf support channels shall be provided to permit adjustment of shelf location in the field. The channels shall have a single continuous slot to allow shelves to be placed at any height within the cabinet. Channels with fixed notches or holes are not acceptable.

8.2.4 Each cabinet shall be equipped with an extra set of unistrut channels or a keyhole panel on either side of the front section of the cabinet to permit the purchaser to mount additional equipment as necessary.

8.2.5 Shelves shall be at least 330 mm (13”) deep and be located in the cabinet to provide a 12.5 mm (0.5”) clearance between the back of the shelf and the back of the cabinet. A 38mm (1.5”) document drawer shall be provided in the cabinet, mounted directly beneath the controller support shelf. The drawer shall have a hinged top cover and shall be capable of storing documents and miscellaneous equipment. Provide a drawer with telescoping drawer guides to allow full extension from the shelf to provide storage space for cabinet documentation and standard laptop This drawer shall support up to 22.5 kg (50 lbs) in weight when fully extended. The drawer shall open and close smoothly. Drawer dimensions shall make maximum use of available depth offered by the controller shelf and be a minimum of 600 mm (23.6”) wide. Provide a top for the storage compartment that has a non-slip plastic laminate attached covering 90% of the surface area.

8.2.6 Two shelves shall be provided in the cabinet and shall be at minimum 305 mm (12”) apart in height. There shall be sufficient shelf space to accommodate a controller unit 330 mm (13”) high, an MMU, two 8 position card racks and external power supply. An additional space at least 305 mm (12”) high, 325 mm (12.8”) wide, and 305 mm (12”) deep shall be provided. The controller unit, MMU, card racks, and power supply shall be placed on the shelves in such a manner that sufficient ventilation is provided to all components. Labels showing the proper placement of each component shall be provided along the shelves to ensure proper placement. Labels shall be permanent engraved and riveted to the shelf.

8.2.7 The cabinet shall be vented and cooled by 2 thermostatically controlled fans. The fans shall be a commercially available model with a capacity of at least 2.83 m^3/min. (100 ft^3/min.). The thermostats shall have an adjustable range of 32°C to 65°C (90°F to 150°F) . A press-to-test switch shall be provided to test the operation of the fans.

8.2.8 The cabinet shall be provided with a unique five digit serial number which shall be stamped directly on the cabinet or engraved on a metal or metalized mylar plate, epoxied or riveted with aluminum rivets to the cabinet. The digits shall be at least 5 mm (0.2”) in height and located on the upper right sidewall of the cabinet near the front.

8.3 Cabinet Door

8.3.1 The cabinet shall be provided with one door in front that will provide access to the cabinet. The door shall be provided with three stainless steel hinges with non-removable stainless steel pins, or a full-length stainless steel piano hinge with a stainless steel pin, spot welded at the top of the hinge. The hinges shall be mounted so that it is not possible to remove them from the door or cabinet without first opening the door. The bottom of the door opening shall extend at least to the bottom level of the back panel. The door and hinges shall be braced to withstand a 74 kg per vertical meter of door height load applied to the outer edge of the door standing open. There shall be no permanent deformation or impairment of any of the door or the cabinet body when the load is removed.

8.3.2 The cabinet door shall be fitted with a Corbin #2 lock and a stainless steel handle with a 16 mm (0.630”) minimum diameter shaft or the equivalent cross-sectional area for a square shaft, and a three point latch. The lock and latch design shall be such that the handle cannot be released until the lock is released. Two keys shall be provided for each cabinet. A gasket shall be provided to act as a permanent dust and weather resistant seal at the controller cabinet door facing. The gasket material shall be of a nonabsorbent material and shall maintain its resiliency after long term exposure to the outdoor environment. The gasket shall have a minimum thickness of 6.25 mm (0.25”). The gasket shall be located in a channel provided on the cabinet or on the door(s). An “L” bracket is acceptable in lieu of this channel if the gasket is fitted snugly against the bracket to insure a uniform dust and weather resistant seal around the entire door facing. Any other method is subject to prior approval by the Traffic Engineer during inspection of the sample order.

8.3.3 A locking auxiliary police door shall be provided in the door of the cabinet to provide access to a panel that shall contain a signal shutdown switch, and a signal flash switch, The police door shall be gasketed to prevent entry of moisture or dust and the lock shall be provided with two brass keys. The Police panel door latch shall be accessible from inside the cabinet.

8.3.4 A manual-automatic switch shall be mounted on the inside of the cabinet door and a manual advance push-button switch on a six foot (6’) retractable cord shall be supplied. The manual advance control of the controller unit shall override any external control (external logic, etc.) in effect when the manual-automatic switch is in the manual position. Each actuation of the manual advance push-button switch shall advance the controller to the next interval. Manual control shall not override any calls for preemption. The cord and button shall be coiled and stored on the inside of the cabinet door by a minimum one inch (1”) wide grommet mounting hook and loop tensioning buckle cable tie strap permanently mounted on the inside of the cabinet door.

8.3.5 The intake for the air vent system shall be filtered with an industry standard sized disposable pleated panel or 4 ply woven polypropylene air filter. The minimum filter dimensions shall be 406.4 mm (16”) wide by 304.8 mm (12”) high by 25 mm (1”) thick. The filter shall be securely mounted so that any air entering the cabinet must pass through the filter. The filter shall be easily removable without the use of tools. The cabinet opening for intake of air shall be large enough to use the entire filter. The air intake and exhaust vent shall be screened to prevent entry of insects. The screen shall have an opening no larger than 8.1 mm^2 (0.0125 in^2). The total free air opening of the exhaust vent shall be large enough to prevent excessive backpressure on the fan.

8.4 Wiring

8.4.1 All wiring within the cabinet shall be neat and routed such that opening and closing the door or raising or lowering the back panel will not twist or crimp the wiring. All wiring harnesses shall be either braided, sheathed in nylon mesh sleeving, or made of PVC or polyethylene insulated jacketed cable. Wiring shall be mounted to the cabinet using fastener mounted cable and wire holders. Wiring leading to the cabinet door shall be sheathed in nylon mesh sleeving or be PVC jacketed cable only. All SDLC cabling shall be Belden #7203A or equivalent.

8.4.2 Size

A. All conductors between the main power circuit breakers and the signal power bus shall be a minimum size 10 AWG stranded copper. All conductors carrying individual signal lamp current shall be a minimum size 16 AWG stranded copper. All AC service lines shall be of sufficient size to carry the maximum current of the circuit or circuits they are provided for. Minimum cabinet conductor wire size shall be 22 AWG stranded copper. All wiring and insulation shall be rated for 600 V or greater.

B. Conductors for AC common shall be white. Conductors for equipment grounding shall be green. All other conductors shall be a color coded different than the foregoing.

C. No P.C. boards will be allowed on the back panel of the cabinet. All wiring must be done from the BIUs to the Load Switches using standard 19-gauge wiring.

8.4.3 A barrier terminal block with a minimum of three compression fitting terminals designed to accept up to a #4 AWG stranded wire shall be provided for connection of the AC power lines. The block shall be rated at 50 Amperes.

8.4.4 All terminals shall be permanently identified in accordance with the cabinet wiring diagram using an anodized silk screening process on the aluminum panel. Where through-panel solder lugs or other suitable connectors are used, both sides of the panel shall have the terminals properly identified. Identification shall be placed as close to the terminal strip as possible.

A. Each controller input and output function shall be distinctly identified with no obstructions, at each terminal point in the cabinet, with both a number and the function designation. The same identification must be used consistently on the cabinet wiring diagrams.

B. Each load switch socket shall be identified by phase number, overlap number, and pedestrian phase number as applicable. No cabinet equipment, including the load switches themselves, may obstruct these identifications.

C. Each flash transfer base and power relay base shall be properly identified with no possible obstructions.

D. Each harness within the cabinet shall be distinctly identified by function on the connector end.

E. The flasher socket shall be distinctly identified with no possible obstruction.

F. All other sockets needed within the cabinet to fulfill the minimum requirements of the Invitation to Bid, or attachments thereof, shall be distinctly identified.

8.4.5 The controller unit harness (A plug) shall be long enough to reach any point 400 mm (16”) above the timer shelf. The MMU harness and any required auxiliary harness shall reach 600 mm (24”) from the MMU shelf.

8.4.6 An unused, spare terminal block providing ten terminals shall be provided. This block shall be double 8-32 X 5/16" binder head screw design with shorting bars. These terminal strips shall be located on the lower third of either side of the cabinet.

8.4.7 Copper ground buses shall be provided for both the power supply neutral (common) and chassis ground. Each bus bar must provide a minimum of ten unused terminals with 8-32 X 5/16" or larger screws with compression fitting style terminals. The AC neutral and chassis ground buses shall be jumpered together with a minimum #10 AWG wire.

8.4.8 A 20 Ampere and a 50 Ampere thermal type circuit breaker shall be mounted and wired in the cabinet. The 20 ampere breaker shall protect the base light, trouble light, ground fault circuit interruption (GFCI) receptacle, modem duplex receptacle, and fans. The 50 ampere breaker shall protect the signal load circuits, controller circuits, MMU, flasher, and card rack detector power supply. The breakers shall be Square "D" QUO 150 Series only.

8.4.9 The circuit breakers shall be equipped with solderless connectors and installed on the right side wall (facing the cabinet) or lower right hand side of the back panel inside the cabinet. The breakers shall be easily accessible. The breakers shall be positioned so that the rating markings are visible.

8.4.10 A GFCI type duplex receptacle shall be mounted and wired in the lower right side wall of the cabinet. An additional non-GFI duplex receptacle (for use with communications modems) shall be mounted and wired in the upper left side of the cabinet behind the preempt/interconnect panel. These receptacles shall be wired on the load side of the 20 Amp circuit breaker. A six (6) outlet (minimum) plug strip shall be mounted on an aluminum panel and the panel mounted to the shelf din rails. The housing of the plug strip shall be aluminum. The receptacles on the plug strip shall be oriented at 90 degrees to the length of the plug strip and the spacing of the receptacles shall allow wall transformers to be plugged into adjacent receptacles without blocking the adjacent receptacles.

8.4.11 The above breakers are in addition to any auxiliary fuses which may be furnished with the controller to protect component parts, such as transformers, etc.

8.4.12 The load side of the main circuit breaker shall be protected by a two stage lightning surge suppresser, equivalent to the EDCO APC340 (with LED indication along with a set dry contacts for alarm capabilities to indicate proper operation).

8.4.13 The suppresser ground connection shall be connected to the cabinet by means of a short, heavy copper ground strap. The strap shall be bonded to the cabinet.

8.4.14 The suppresser shall be connected to the line filter as recommended by the manufacturer. Number 10 AWG or larger wire shall be used for connections to the suppresser, line filter and load switch bus.

8.4.15 A fluorescent light, with switch and a rapid start, -18°C (0°F) ballast, shall be installed in the cabinet. This light shall be turned on when the cabinet door is opened, and turn off when the cabinet door is closed. A MOV or other such transient suppression device shall be placed across the AC power input to the light. The switch shall also provide a set of door open alarm contacts.

8.4.16 A radio frequency interference (RFI) suppresser shall be provided and installed on the load side of the signal circuit breaker and shall be protected by the surge protector. This filter shall be rated at 50 amperes and shall provide a minimum attenuation of 50 decibels over the frequency range of 200 Kilohertz to 75 Megahertz.

8.4.17 Transient suppression devices shall be placed on the coil side of all relays in the cabinet. DC relay coils shall have, as a minimum, a reversed biased diode across the coil. AC relays shall have MOV's or equivalent suppression across their coils. RC networks are acceptable. One suppression device shall be supplied for each relay.

8.4.18 Except where soldered, all wires shall be provided with lugs or other approved terminal fittings for attachment to binding posts. Insulation parts and wire insulation shall be insulated for a minimum of 600 volts.

8.4.19 The outgoing traffic control signal circuits shall be of the same polarity as the line side of the power source.

8.4.20 A switch shall be provided on the inside face of the cabinet door that shall be labeled Test-Normal. When the switch is in the Normal position, call for flashing operation shall remove the power from the controller unit. When the switch is in the Test position, the call for flashing operation shall permit the controller unit to continue to run so that its operation can be observed.

8.4.21 A switch shall be provided near the Test-Normal switch to cause the controller unit, and any auxiliary equipment, to stop timing. It shall be labeled "STOP TIMING".

8.4.22 The cabinet shall be wired so that activation of the MMU will cause the controller unit, and any auxiliary equipment, to stop timing.

8.4.23 Conflict and manual flash shall be wired for all red.

8.4.24 The cabinet shall be designed and equipped with enough transfer relays for the purchaser to change any “Main Street” indications (phase movements 2, 6, and/or 1, 5) to amber for the conflict and/or manual flash operation on the face of the back panel or a side panel, using only simple tools.

8.4.25 Transfer relays shall be the Model 430, 8 pin plug-in type manufactured by Reno A+E, Model TR-200 or approved equal. The relays shall have contacts a minimum of 3/8" diameter in size and shall be rated at a minimum of 30 Amps 102 / 240 VAC, 20 Amps 28 VDC.

8.4.26 The red enable and remote reset from the MMU shall be terminated on the face of the back panel.

8.4.27 A 75 Amp, solid state relay shall be wired between the RFI filter output and the load switch power bus. The relay shall be controlled by the signal shutdown switch and the flash switch. The relay shall be mounted to a heat sink designed to allow maximum current flow at 74°C (165°F) without damaging the relay.

8.4.28 All exposed AC wiring points, including the RFI filter, surge suppresser, and solid state relay shall be covered with a clear non-conductive plastic cover to prevent accidental contact. Unless otherwise noted in this specification, wiring at terminal strips is exempt from this requirement.

8.4.29 An input point shall be provided on the backpanel to allow external reset of the MMU.

8.4.30 The load switch outputs shall be brought out through posted 10-32 X 5/16" binder head screw terminals. Field wiring for the signal heads shall be connected at this terminal strip.

8.5 DETECTOR PANEL AND CARD RACK

8.5.1 The cabinet shall have a loop detector panel mounted on the left side of the cabinet. This panel shall provide for all connections between loops at the street and the detector amplifiers as described in the following sections.

8.6 DETECTOR CARD RACKS

8.6.1 Two card racks shall be provided for cabinet configuration four (16 position backpanel). The first card rack shall accommodate up to a total of eight (8) four (4) channel single space TS2 detector units. The second card rack shall provide an additional, up to 32 channels, of alternate technology detection for up to a total of 64 channels of detection. Each card rack shall include a single position for (1) BIU unit and (8) positions for detectors. The first rack shall have two additional integrated position slots for two (2) 2-channel Preemption phase discriminator cards labeled “EV1” and “EV2”. An auxiliary card rack may be used for the preemption if previously approved by the City Traffic Engineer.

8.6.2 The detector card rack shall have a rigid frame and shall be fabricated from aluminum and shall have slots set in a modular fashion such that the PCB edge connectors shall plug into the rear while sliding between top and bottom card guides for each module. Mounting flanges shall be provided and be turned outward for ease of access. The detector card rack shall be bolted to a cabinet shelf. It shall be possible to unbolt the rack using simple tools.

8.6.3 All wiring to the rack shall be labeled and neatly run to other parts of the cabinet and detector termination panel.

8.6.4 The slots shall be numbered 1 to 8 left to right when viewed from the front of the rack. A flange shall be provided on the top and the bottom of the rack to label each individual channel.

8.6.5 The Detector DC Supply shall be bussed to a common point and wired to the Intersection Detector Panel.

8.6.6 The Chassis Ground shall be bussed to a common point and wired to the Detector Panel.

8.6.7 The Logic Ground shall be bussed to a common point and wired to the Detector Panel.

8.6.8 The Data Address for the detector channels shall be according to TS2.

8.7 DETECTOR PANEL

8.7.1 The Detector Panel shall provide all connections between the detector loops and the detector amplifiers.

8.7.2 The panel shall be constructed of 3.2 mm (0.125 “) aluminum.

8.7.3 The panel shall contain a 76 mm (3”) horizontal slot in each corner to accommodate 6.3 mm (1/4”) mounting bolts.

8.7.4 All inputs from the loops shall be brought through posted 10-32 X 5/16 inch binder screw terminals or 8-32 X 5/16 inch binder screw terminals.

8.7.5 Each loop pair shall be protected by lightning surge suppressor. The suppressers must be mounted behind the panel using feed through screw terminals to attach the suppressors.

8.7.6 Each detector will have a test switch such that when the switch is closed, a call is placed upon that detector input. The test switch will have three positions; no effect, permanently on, and momentarily on.

8.7.7 The detector panel shall provide connection points for a minimum of 32 loop detectors.

CONNECTION POINT	**NO. OF CONNECTION POINTS**
EXTERNAL 24V POWER SUPPLY	1
LOOP INPUTS	64, 2 FOR EACH OF 32 LOOPS
LOGIC GROUND	1
SPARES	6
CHASSIS GROUND BUS	1 BUS

8.7.8 A chassis ground bus bar shall be provided on the panel and connected to the cabinet by an insulated braided copper ground strap. The strap shall be bonded to the cabinet.

8.8 PREEMPT / COMMUNICATION PANEL

8.8.1 A preempt / communication panel shall be provided that contains all interface circuits and wiring for preemption and communication functions. The panel shall be located on the left side of the cabinet interior.

8.8.2 Three input relay circuits, with 120 VAC coil and contacts rated for the application, shall be provided on the preempt panel. These circuits shall be used to isolate the incoming preempt commands from the controller unit logic circuitry. The circuits shall be programmable to operate with either a normally open or normally closed relay contact by jumpers on a terminal strip. A barrier strip protected from accidental contact by service personnel shall be supplied to connect the external input. It shall be possible to use either a neutral or hot 120 VAC input. Relays used shall be plug-in Potter Brumfield K10P series / Magnecraft W-78 series or interchangeable equivalent. The relays shall be mounted in relay sockets.

8.8.3 Adequate protection of the input relay circuits as well as the preemptor circuitry shall be provided to eliminate damage or false preemption commands caused by line transients or lightning surges. The devices shall have a minimum rating of 20 Joules.

8.8.4 Three momentary test switches, one for each preempt circuit, shall be provided on the preempt panel. The operator shall not be exposed to hazardous voltages during operation of the test switches.

8.8.5 All necessary interconnection cables and mounting hardware shall be provided.

8.8.6 There shall be a switch on the preempt/communication panel, which shall release the local controller to operate in an isolated, full-actuated manner, when necessary for maintenance purposes. The switch positions shall be labeled “SYSTEM” and “FREE”.

8.8.7 Terminal connections for 8 twisted pair communication lines and one telephone line shall also be provided. The protection will consist of series 25 ohm resistors, 15 volt transorbs, and other devices, which allow protection including primary overvoltage protection, resettable overcurrent protection, secondary clamping voltage protection, and fast transient filtering. The secondary overvoltage stage shall allow peak voltages of no more than 250 volts. The fast transient filtering stage shall provide no less than 40 dB/decade of attenuation to transients above the required pass band. The protection shall be provided in an integrated closure with eight (8) input/output terminations and ground connection.

8.9 POWER SUPPLY

8.9.1 The power supply shall be a shelf mounted, enclosed, 24 VDC power supply in accordance to Clause 5.3.5 of the NEMA Standards Publication TS2 latest revision.

8.9.2 One power supply cable per power supply shall be furnished and installed in each cabinet. The wires shall be terminated to bus bars, terminals on the front of the backpanel, detector panels, or connector as appropriate. The connections shall be with forked spade lugs or otherwise as needed. Each individual wire shall be cut to the length required to reach the point at which it is to be connected. Model shall be Reno A+E, TS-2 Cabinet Power Supply, or approved equal.

8.10 TWO CIRCUIT SOLID STATE FLASHER

8.10.1 The solid state, two circuit flasher shall meet the electrical and physical characteristics described in Clause 6.3 of the NEMA Standards Publication TS2 latest revision. The flasher shall be Type III (dual circuit rated at 15 Amps per circuit) unit and so constructed that each component may be readily replaced if needed.

8.10.2 The two circuit flasher shall be of solid state design and contain no electro-mechanical devices. Model shall be Reno A+E, Model FL-200, or approved equivalent.

8.11 LOAD SWITCH

8.11.1 The solid state load switches shall meet the requirements set forth in Clause 6.2 of the NEMA Standards Publication TS2 latest revision, and shall be "Triple-Signal Load Switch" I/O, dual indicating type. Model shall be Reno A+E, Model LS-200, or approved equivalent.

8.11.2 Two indicator lights (LED) for each circuit shall be provided in each load switch. The input indicator LED shall be on when a "Low Voltage Active" input to the load switch is present. The output indicator LED shall be on when the internal loadswitch triac triggers and AC output for the respective channel as the input indicator. Load switches shall be rated at 20 amps @ 70°C. All pedestrian yellows shall be wired to terminal block.

8.12 MALFUNCTION MANAGEMENT UNIT (MMU)

8.12.1 The MMU shall meet all requirements set forth in Section 4 of the NEMA Standards Publication TS2 latest revision, Type 16 style. In addition to the DB-15 port 1 (SDLC) connector defined in §4.3.1, the MMU shall have a DB-9 port 2 (RS-232) connector located adjacent to the port 1 connector and Ethernet Port to allow high speed external data transfer. Model shall be Reno A+E MMU-1600GE or approved equal.

8.12.2 The MMU shall be fully compatibility with the cabinet SDLC.

8.12.3 The MMU shall have three (3) output indicators for all 16 phases to indicate Red/Yellow/Green outputs.

8.12.4 The MMU shall have the ability to log event conflicting event history, power disturbances, and real-time RMS AC line voltage values in an internal non-volatile memory. This information shall be capable of being extracted via port 2 by both of the following methods:

a) Downloading via Procom or similar, generic, RS-232 compatible terminal software

b) Downloaded directly into ATMS software.

8.12.5 Minimum data reporting requirements available remotely from the MMU shall be:

a) Trace (real-time status) reports of all current front panel indications

b) History/event logs of recent faults

c) User defined Programming card and front panel switch positions of the MMU

8.13 BUS INTERFACE UNIT (BIU) NETWORK CARDS

8.13.1 The cabinet shall be equipped with a total of five (5) BIU cards, two (2) BIU cards for the load bay, plus three (3) BIU cards for the detector racks. The BIU shall meet, as a minimum, all applicable sections of the NEMA Standards Publication TS2 latest revision.

8.13.2 The BIU shall be rack-mountable and solid-state. The BIU unit shall be constructed with discrete component circuitry in order to allow repair and maintenance of the unit by use of standard tools. The BIU shall utilize machine tooled integrated circuit (IC) sockets for all IC's of 14 pins or greater, for ease of repair.

8.13.3 The BIU shall be proven to the satisfaction of the City Traffic Engineer to provide full compatibility with the cabinet SDLC data circuits. Model shall be Reno A+E, Model BIU/2, or approved equal.

8.14 PEDESTRIAN INPUTS

8.14.1 Pedestrian inputs shall be isolated from the controller input circuits by means of pedestrian isolators. Isolation shall be provided by a pedestrian isolation card or by pedestrian isolation units incorporated into the cabinet. Pedestrian isolation shall be approved by the City Traffic Engineer.

8.15 CABINET COMMUNICATIONS

8.15.1 The cabinet shall be supplied with a Actelis ML688 Ethernet over Copper unit, or other equal approved by the City Traffic Engineer. The switch shall provide 4-10/100 copper Ethernet ports and a 100 Base – FX optical SFP port.

8.15.2 The switch shall be mounted on slide mount brackets attached to the underside of the controller shelf or at another location approved by the City Traffic Engineer. The brackets will provide a slide mount that will lock the unit in place in the stored position and allow easy removal of the switch without the use of tools.

8.15.3 Four (4) - HESCO/RLS model HE624D Data Line Surge Suppressor with base sockets shall be provided and mounted on a aluminum plate. The plate shall be mounted on the upper left side of the cabinet and will be located to provide easy access to the terminals. 19 gauge, minimum, communications grade conductors shall connect the protected side of the HE624D to the Ethernet over copper unit.

8.15.4 Fiber switch shall be hardened, dual single mode LC, 10/1000 optic ports, 4 managed 10/100 ethernet ports, hardened power supply, dim rail mount, Actelis model ML530, or other approved equal by the City Traffic Engineer.

8.15.5 All cables, conductors and auxiliary equipment required to provide connections within the cabinet from the MMU, Controller, and Video systems to the Actelis unit and CISCO switch will be provided by the cabinet supplier.

8.16 TESTING

Testing of fully wired cabinet(s) and auxiliary equipment as specified in Section 86-3, Controllers, of the Standard Specifications will be performed by the City.

Each complete cabinet shall be delivered to the City Corporation Yard, 1705 Martin Avenue, Santa Clara, California 95050.

If the cabinet supplier is notified of the need for repair of equipment being tested, the required repair shall be made within five (5) Working Days of the time of notification. If the repairs will require more than five (5) Working Days, the equipment shall be removed from the Electrical Maintenance Shop, repaired and returned for restart of testing. If the cabinet supplier or his representative fails to remove the equipment as stated above, the Engineer may, at his discretion, return the equipment to the manufacturer. All costs for repairs and equipment removal and return shall be at the expense of the cabinet supplier.

8.17 ADDITIONAL INCLUDED ITEMS

Each cabinet shall also include the following items:

a) Four (4) Anchor bolts

b) Sixteen (16) Load Bay Jumpers

9.0 2070-2NZ CONTROLLER SPECIFICATIONS FOR TS2

The controller shall be Model 2070L NEMA TS2 – Type 1 with Apogee Version 65 NTCIP based Intersection Control Software by Naztec, and conforming to the following specifications:

The controller shall be Model 2070L NEMA TS2 – Type 1 ATC traffic controller per Section 86-3, Controller Assemblies, of the Standard Specifications, shall conform to the latest Transportation Electrical Equipment Specifications (TEES), and shall be listed on the California Department of Transportation's Qualified Products List (QPL). The controller shall be equipped with the following modules:

2070-1B	8Mb-CPU with Ethernet Port
2070-2B	I/O Module for NEMA Cabinets
2070-2NZ	TS2 I/O Side Mount Module
2070-3B	8x40 Line Display
2070-4B	Power Supply
2070-7A	Dual Serial Port Card

- **2070-1B**

The 2070-1B shall be 8Mb and equipped with an Ethernet port. The controller software operating on the 2070-1B shall be capable of utilizing the Ethernet port for data transfers. The operating system shall allow the user FTP and Telnet access via the Ethernet port.

- **2070-2B**

The 2070-2B shall provide for NEMA I/O to interface for TS1 or TS2 operation. The 2B module shall provide a C12S serial communications port and SP3 operation. The SP3 shall have a disable switch.

- **2070-2NZ**

The 2070-2NZ module shall provide a front connection for the Port 1 SDLC port, the Type-1 connector, and two serial ports (C21S and C22S) from the 2070-7A serial card. The 2NZ shall provide Port 1 SDLC communications via the C12S and C13S ports. The 2NZ module shall be constructed of matching aluminum design to the 2070 chassis, and mount on the right side of the controller via the rack ear slots and provide access to all critical TS2 ports through the front of the controller.

- **2070-7A**

The 2070-7A shall conform to TEES specifications. The 2070-7A shall be optically isolated and capable of asynchronous serial communication for ports C215 and C225. On-board jumpers shall be provided to allow either DCE or DTE operation for each port.

- **Operating System**

The 2070 controller shall operate on the 2070-1B using Microware OS9 v3.2 or higher.

- **Intersection Software**

The controller software shall include the latest version of “Apogee” v65-Local NTCIP-based Intersection Control Software by Naztec Inc. The firmware shall come factory installed on the controller hardware.

- **Testing**

Prior to delivery, each controller assembly shall be configured and tested by the supplier. The controller shall be “plug and play” ready for the City’s existing cabinets.

- **Installation and Training**

A factory certified representative for the manufacturer shall be on-site during signal turn-on for support.

The supplier shall provide a maximum of two hours of technical training for City staff within four weeks after controller delivery.

- **Warranty**

The controller assembly shall be warranted by the manufacturer against mechanical and electrical defects for a period of 1 year.

The supplier shall correct any defects in design, workmanship or material during the warranty period at no cost to the City. All cost of labor, parts and transportation shall be borne by the supplier for the duration of the warranty period.

The vendor shall provide all standard revisions to any equipment furnished under this Section 02086, at no cost to the City.

10.0 FIBER OPTIC CABLE

Contractor shall furnish and install a 288 strand single mode fiber optic cable as shown on the plans unless otherwise indicated.

10.1 GENERAL

This item shall govern for the furnishing and installation of fiber optic cable in designated locations as shown on the plans and as detailed in accordance with this Section 02086.

10.2 REQUIREMENTS

Fiber optic cables shall be supplied in the configurations shown on the plans and specified in this Section 02086.

Each fiber optic cable shall be suitable for both underground conduit/duct placement and indoor application. The fiber optic cable shall be fire rated. Additionally, there will be ancillary drop and connecting (patching) optical fiber cables procured under this Section 02086, which are more precisely described elsewhere in this Section 02086.

All materials furnished, assembled, fabricated or installed under this item shall be new, corrosion resistant and in strict accordance with the details shown and specified in the Contract Documents. All fibers in the cables shall be usable fibers and free of surface imperfections and occlusions, in order to meet or exceed all of the optical, mechanical, and environmental requirements contained in this Section 02086.

All cables shall be free of material or manufacturing defects and dimensional non-uniformity that would:

- Interfere with the cable installation employing accepted cable installation practices.

- Degrade the transmission performance and environmental resistance after installation.
- Inhibit proper connection to interfacing elements.
- Otherwise yield an inferior product.
- Each fiber optic cable for this project shall be all-dielectric, dry water-blocking material, duct type, with loose buffer tubes, and shall conform to these Specifications.

The Contractor shall furnish, install, splice and test all the required fiber optic cable. All splicing kits, fiber optic cable caps, moisture/water sealants, terminators, splice trays, patch cords, connectors, pig tails and accessories to complete the fiber optic network shall be provided as incidentals. All equipment for installation, splicing and testing shall be provided by the Contractor.

All fiber optic glass/cable on this project shall be from the same qualified manufacturer regularly engaged in the production of optical fiber material.

The optical fibers shall be contained within buffer tubes. The buffer tubes shall be stranded around an all-dielectric central member. Aramid yarn and/or fiberglass shall be used as a primary strength member, and a medium or high-density polyethylene outside jacket shall provide overall protection.

The cable shall be qualified as compliant with Chapter XVII, of Title 7, Part 1755.900 of the Code of Federal Regulations, “RUS Specification for Filled Fiber Optic Cables.”

10.3 PACKAGING

1. The completed cable shall be packaged for shipment on non-returnable wooden reels. Required cable lengths shall be stated in the purchase order.

2. Top and bottom ends of the cable shall be available for testing.

3. Both ends of the cable shall be sealed to prevent the ingress of moisture.

4. Each reel shall have a weather resistant reel tag attached identifying the reel and cable.

10.4 CABLE MARKING

1. The optical fiber cable outer jacket shall be marked with manufacturer's name, the month and year of manufacture, the words "Optical Cable", telecommunications handset symbol as required by Section 350G of the National Electrical Safety Code® (NESC®), fiber count, fiber type, and sequential meter marks.

2. The markings shall be repeated every two feet (2’).

3. The actual length of the cable shall be within -0/+1% of the length marking.

4. The marking shall be in a contrasting color to the cable jacket.

5. The marking shall be approximately 0.1 inch in height and must be permanent and weatherproof.

10.5 QUALITY CONTROL

The manufacture of supplied optical cable, optical cable assemblies, and hardware shall be TL 9000 and/or ISO 9001 registered. All cabled optical fibers shall be 100% attenuation tested. The attenuation of each fiber shall be provided with each cable reel.

10.6 GENERAL CONSIDERATIONS

Fiber Optic Outside Plant Cable
Fiber optic outside plant cable (FOOP) shall be dielectric, non-gel filled or water-blocking material, duct type, with loose buffer tubes. Cables with singlemode fibers shall contain 288 singlemode (SM) dual-window (1310 nm and 1550 nm) fibers. Optical fibers shall be contained within loose buffer tubes. Loose buffer tubes shall be stranded around a dielectric central member. Aramid yarn or fiberglass shall be used as a primary strength member, and a polyethylene outside jacket shall provide protection.

Fiber optic cable shall be from the same manufacturer who is regularly engaged in the production of fiber optic cables.

Cables shall be compliant with 7 CFR 1755.900 (RUS Bulletin 1753F-601), "RUS Specification for Filled Fiber Optic Cables."

Fiber Characteristics
Optical fiber shall be glass and consist of a doped silica core surrounded by concentric silica cladding. Fibers in buffer tubes shall be usable fibers, and shall be sufficiently free of surface imperfections and occlusions to meet optical, mechanical, and environmental requirements of these specifications. Required fiber grade shall reflect the maximum individual fiber attenuation to guarantee required performance of fiber in cables.

Coating shall be dual layered, UV cured acrylate, mechanically or chemically strippable without damaging fibers.

Cable shall comply with optical and mechanical requirements over an operating temperature range of -40°C to +70°C. Cable shall be tested in accordance with EIA-455-3A (FOTP-3), "Procedure to Measure Temperature Cycling Effects on Optical Fiber, Optical Cable, and Other Passive Fiber Optic Components." Change in attenuation at extreme operational temperatures (-40°C to +70°C) for singlemode fiber shall not be greater than 0.20 dB/km, with 80 percent of measured values no greater than 0.10 dB/km. Singlemode fiber measurement shall be made at 1550 nm.

Singlemode fibers within finished cables shall meet the following requirements:

Fiber Characteristics Table	
Parameters	Singlemode
Type	Step Index
Core diameter	8.3 µm (nominal)
Cladding diameter	125 µm ±1.0 µm
Core to Cladding Offset	≤0.8 µm
Coating Diameter	250 µm ±15 µm
Cladding Non-circularity defined as: [1-(min. cladding dia ÷max. cladding dia.)] x 100	≤1.0%
Proof/Tensile Test	345 MPa, min.
Attenuation: (-40°C to +70°C) @850 nm @1300 nm (MM)/1310 nm (SM) @1550 nm	 N/A ≤0.4 dB/km ≤0.3 dB/km
Attenuation at the Water Peak	≤2.1 dB/km @ 1383 ±3 nm
Bandwidth:	
@1,300 nm (MM)/1310 nm (SM)	N/A
Chromatic Dispersion: Zero Dispersion Wavelength Zero Dispersion Slope	 1301.5 to 1321.5 nm ≤0.092 ps/(nm^2*km)
Maximum Dispersion:	≤3.3 ps/(nm*km) for 1285 – 1330 nm <18 ps/(nm*km) for 1550 nm
Cut-Off Wavelength	<1260 nm
Numerical Aperture (measured in Accordance with EIA-455-47)	N/A
Mode Field Diameter (Petermann II)	9.3 ±0.5 µm at 1310 nm 10.5 ±1.0 µm at 1550 nm

Color Coding
In buffer tubes containing multiple fibers, length of fiber shall be distinguishable from others in the same tube by means of color-coding according to the following:

1. Blue (BL)	7. Red (RD)
2. Orange (OR)	8. Black (BK)
3. Green (GR)	9. Yellow (YL)
4. Brown (BR)	10. Violet (VL)
5. Slate (SL)	11. Rose (RS)
6. White (WT)	12. Aqua (AQ)

Buffer tubes containing fibers shall be color-coded with distinct and recognizable colors according to the table listed above for fibers.

Colors shall be in accordance with the Munsell color shades (ASTM d 1535-01) and shall meet EIA/TIA-598 "Color Coding of Fiber Optic Cables."

Color formulations shall be compatible with fiber coatings and buffer tube filling compounds, and be heat stable. Colors shall not fade or smear or be susceptible to migration and shall not affect transmission characteristics of optical fibers and shall not cause fibers to stick together.

Cable Construction
Fiber optic cable shall consist of, but not limited to, the following components:

1. Buffer tubes
2. Central member
3. Filler rods
4. Stranding
5. Core and cable flooding
6. Tensile strength member
7. Ripcord
8. Outer jacket

Buffer Tubes
Clearance shall be provided in loose buffer tubes between fibers and insides of tubes to allow for expansion without constraining fibers. Fibers shall be loose or suspended within tubes and shall not adhere to insides of buffer tubes. Buffer tubes shall contain a maximum of 12 fibers.

Loose buffer tubes shall be extruded from material having a coefficient of friction sufficiently low to allow free movement of fibers. Material shall be tough and abrasion resistant to provide mechanical and environmental protection of fibers and permit safe intentional "scoring" and breakout without damaging or degrading internal fibers.

Buffer tube filling compound shall be a homogeneous hydrocarbon-based gel with anti-oxidant additives used to prevent water intrusion and migration. Filling compound shall be non-toxic and dermatologically safe to exposed skin, chemically and mechanically compatible with cable components, non-nutritive to fungus, non-hygroscopic and electrically non-conductive. Filling compound shall be free from dirt and foreign matter and shall be readily removable with conventional nontoxic solvents.

Buffer tubes shall be stranded around a central member by a method, such as the reverse oscillation stranding process that will prevent stress on fibers when the cable jacket is placed under strain.

Central Member
The central member functions as an anti-buckling element and shall be a glass reinforced plastic rod with similar expansion and contraction characteristics as the optical fibers and buffer tubes. A symmetrical linear overcoat of polyethylene may be applied to central members to achieve optimum diameter to ensure proper spacing between buffer tubes during stranding.

Filler Rods
Fillers may be included in cables to maintain symmetry of cable cross-sections. Filler rods shall be solid medium or high-density polyethylene. The diameter of filler rods shall be the same as the outer diameter of buffer tubes.

Stranding
Completed buffer tubes shall be stranded around the overcoated central member using stranding methods, lay lengths and positioning so cables meet mechanical, environmental and performance specifications. A polyester binding shall be applied over stranded buffer tubes to hold them in place. Binders shall be applied with sufficient tension to secure buffer tubes to central members without crushing buffer tubes. Binders shall be non-hygroscopic, non-wicking (or rendered so by the flooding compound) and dielectric with low shrinkage.

Core and Cable Flooding
Cable core interstices shall contain a water blocking material to prevent water ingress and migration. Water blocking material shall be a polyolefin based compound, which fills the cable core interstices, or an absorbent polymer, which fills voids and swells to block ingress of water. Flooding compound or material shall be homogeneous, non-hygroscopic, electrically non-conductive, non-nutritive to fungus, nontoxic, dermatologically safe, and compatible with other cable components.

Tensile Strength Member
Tensile strength shall be provided by high tensile strength Aramid yarns or fiberglass helically stranded evenly around cable cores and shall not adhere to other cable components.

Ripcord
Cables shall contain at least one ripcord under the jacket for easy sheath removal.

Outer Jacket
Jackets shall be free of holes, splits, and blisters and shall be medium or high-density polyethylene (PE), or medium density cross-linked polyethylene with minimum nominal jacket thickness of 1 mm ±0.076 mm. Jacketing material shall be applied directly over tensile strength members and water blocking materials and shall not adhere to Aramid strength materials. Polyethylene shall contain carbon black to provide ultraviolet light protection and shall not promote fungus growth.

Jackets or sheaths shall be marked with the manufacturer's name, the words "Optical Cable", the number of fibers, "SM", year of manufacture, and sequential measurement markings every meter. Actual cable lengths shall be within -0/+1 percent of length markings. Markings shall be a contrasting color to cable jackets. Heights of markings shall be 2.5 mm ±0.2 mm.

General Cable Performance Specifications
F/O cable shall withstand water penetration when tested with one meter static head or equivalent continuous pressure applied at one end of a one meter length of filled cable for one hour. No water shall leak through open cable ends. Testing shall be in accordance with EIA-455-82 (FOTP-82), "Fluid Penetration Test for Fluid-Blocked Fiber Optic Cable."

A representative sample of cable shall be tested in accordance with EIA/TIA-455-81 (FOTP-81), "Compound Flow (Drip) Test for Filled Fiber Optic Cable". No preconditioning period shall be conducted. Cables shall exhibit no flow (drip or leak) at 70°C as defined in the test method.

Crush resistance of finished F/O cables shall be 220 N/cm applied uniformly over the length of cables without showing evidence of cracking or splitting when tested in accordance with EIA-455-41 (FOTP-41), "Compressive Loading Resistance of Fiber Optic Cables". The average increase in attenuation for fibers shall be ≤0.10 dB at 1550 nm (singlemode) for a cable subjected to this load. Cables shall not exhibit measurable increase in attenuation after removal of load. Testing shall be in accordance with EIA-455-41 (FOTP-41), except that loads shall be applied at the rate of 3 mm to 20 mm per minute and maintained for 10 minutes.

Cables shall withstand 25 cycles of mechanical flexing at a rate of 30 ±1 cycles/minute. The average increase in attenuation for fibers shall be ≤0.20 dB at 1550 nm (singlemode) at the completion of testing. Outer cable jacket cracking or splitting observed under 10x magnification shall constitute failure. Testing shall be conducted in accordance with EIA-455-104 (FOTP-104), "Fiber Optic Cable Cyclic Flexing Test," with sheave diameters a maximum of 20 times the outside diameter of cables. Cables shall be tested in accordance with Test Conditions I and II of (FOTP-104).

Cables shall withstand 20 impact cycles, with a total impact energy of 5.9 N•m. Impact testing shall be conducted in accordance with TIA/EIA-455-25B (FOTP-25) "Impact Testing of Fiber Optic Cables and Cable Assemblies". The average increase in attenuation for fibers shall be <0.20 dB at 1550 nm for singlemode fiber. Cables shall not exhibit evidence of cracking or splitting.

Finished cable shall withstand a tensile load of 2700 N without exhibiting an average increase in attenuation of greater than 0.20 dB (singlemode). Testing shall be conducted in accordance with EIA-455-33 (FOTP-33), "Fiber Optic Cable Tensile Loading and Bending Test". Load shall be applied for 30 minutes in Test Condition II of the EIA-455-33 (FOTP-33) procedure.

Packaging and Shipping Requirements

Documentation of compliance to specifications shall be provided to the Engineer prior to ordering materials.

Attention is directed to "Fiber Optic Testing", of these special provisions.

Completed cables shall be packaged for shipment on reels. Cables shall be wrapped in weather and temperature resistant covering. Ends of cables shall be sealed to prevent ingress of moisture.

Ends of cables shall be securely fastened to reels to prevent cables from coming loose during transit. Four meters of cable on ends of cables shall be accessible for testing.

Cable reels shall have durable, weatherproof labels or tags showing the manufacturer's name, cable type, the actual length of cable on reels, the Contractor's name, the contract number, and the reel number. A shipping record shall be included in a weatherproof envelope showing the above information, including the date of manufacture, cable characteristics (size, attenuation, bandwidth, etc.), factory test results, cable identification number and other pertinent information.

Minimum hub diameter of reels shall be at least 30 times the diameter of the cable. F/O cable shall be in one continuous length per reel with no factory splices in fibers. Reels shall be marked to indicate the direction reels should be rolled to prevent loosening of cables.

Installation procedures and technical support information shall be furnished at the time of delivery.

10.7 LABELING

General

The Contractor shall label fiber optic cabling in a permanent consistent manner. Tags shall be of a material designed for long term permanent labeling of fiber optic cables. Metal tags shall be stainless steel with embossed lettering. Non-metal label materials shall be approved by the Engineer and marked with permanent ink. Labels shall be affixed to cables per the manufacturer's recommendations and shall not be affixed in a manner, which will cause damage to fibers. Handwritten labels will not be allowed.

10.8 CABLE INSTALLATION

Cable installation shall be in conformance with the procedures specified by the cable manufacturer. The Contractor shall submit the manufacturer's recommended procedures for pulling fiber optic cable at least 20 Working Days prior to installing cable. Mechanical aids may be used provided that a tension measuring device, and break-away swivel are placed in tension to the end of cables. Tension in cables shall not exceed 2225 N or the manufacturer's recommended pulling tension, whichever is less.

During cable installation, the bend radius shall be a minimum of 20 times the outside diameter. Cable grips for installing fiber optic cables shall have a ball bearing swivel to prevent cables from twisting during installation.

F/O cable shall be installed using a cable pulling lubricant recommended by the F/O cable manufacturer and a pull rope conforming to the provisions in Section 4.10, "Conduit" of these special provisions. Personnel shall be stationed at splice vaults and pull boxes through which cables are pulled to lubricate and prevent kinking or other damage.

F/O cable shall be installed without splices except where allowed on the plans and shall be limited to one cable splice every 6 km if splice locations are not shown on the plans. Mid-span access splices or FDU terminations shall involve fibers being spliced as shown on the plans. Cable splices shall be located in splice closures installed in splice vaults or in No. 6(E) pull boxes. Slack shall be provided for F/O cables at the following splice enclosures:

Splice Enclosure Type	Minimum Slack (feet)
Splice Vault (N48)	**100**
Splice Vault (N48) with slice closure	**50**

The slack shall be divided equally on each side of splice closures.

10.9 SPLICING

Field splices shall be done in splice vaults, cabinets, and in splice trays housed in splice closures. Splices in cabinets shall be done in splice trays housed in FDU's.

Fiber splices shall be fusion type unless otherwise specified. Mean splice loss shall not exceed 0.07 dB per splice and shall be obtained by measuring loss through splices in both directions and averaging the resultant values.

Splices shall be protected with a metal reinforced thermal shrink sleeve. The mid-span access method shall be used to access individual fibers in cables for splicing to other cables. Cable manufacturers recommended procedures and approved tools shall be used for mid-span access. Only fibers to be spliced shall be cut. Buffer tubes and individual fibers not being used in mid-span access shall not be modified or damaged.

Individual fibers shall be looped one full turn within splice trays to avoid micro bending. A 45 mm minimum bend radius shall be maintained during installation and after final assembly in optical fiber splice trays. Bare fibers shall be individually restrained in splice trays. Optical fibers in buffer tubes and placement of bare optical fibers in splice trays shall not produce tensile force on optical fibers.

The Contractor will be allowed to splice a total of 30 percent of fibers to repair damage done during mid-span access splicing without penalty. The Engineer will assess a fine of $300.00 for each additional and unplanned splice. A single fiber may not have more than 3 unplanned splices within the 6km limitation. If a fiber requires more than 3 unplanned splices, the entire length of F/O cable shall be replaced at the Contractor's expense.

10.10 SPLICE CLOSURES

F/O field splices shall be enclosed in splice closures, complete with splice organizer trays, brackets, clips, cable ties, seals and sealant, as needed. Splice closures shall be suitable for direct burial or pull box applications. Manufacturer’s installation instructions shall be supplied to the Engineer prior to installation of splice closures. Location of splice closures shall be where a splice is required as shown on the plans, where designated by the Engineer, or described in these special provisions.

Splice closures shall conform to the following specifications:

A. Non-filled thermoplastic case.

B. Rodent proof, water proof, re-enterable and moisture proof.

C. Cable entry ports shall accommodate 10-mm to 25-mm diameter cables.

D. Multiple grounding straps.

E. Accommodate a minimum of 24 splice trays.

F. Suitable for "butt" or "through" cable entry configurations.

G. Place no stress on finished splices within splice trays.

The Contractor shall verify the quality of splices prior to sealing splice closures. Splice closures shall not be sealed until link testing is performed and is approved by the Engineer.

10.11 SPLICE TRAYS

Each splice tray shall accommodate a minimum of 12 fusion splices and shall allow a minimum bend radius of 45 mm. Individual fibers shall be looped one full turn within splice trays to allow for future splicing. Stress shall not be applied on fibers when located in final position. Buffer tubes shall be secured near entrances of splice trays. Splice tray covers may be transparent.

Splice trays shall conform to the following:

A. Accommodate up to 12 fusion splices.

B. Place no stress on completed splices within the tray.

C. Stackable with a snap-on hinge cover.

D. Buffer tubes securable with channel straps.

E. Accommodate a fusion splice with the addition of an alternative splice holder.

F. Be labeled after splicing is completed.

Only one splice tray may be secured by a bolt through the center of the tray in fiber termination units. Multiple trays shall be securely held in place per the manufacturer's recommendation.

10.12 PASSIVE CABLE ASSEMBLIES AND COMPONENTS

Fiber optic cable assemblies and components shall be compatible components, manufactured by a company regularly engaged in the production of material for the fiber optic industry. Components or assemblies shall be best quality, non-corroding, with a minimum design life of 20 years. The cable assemblies and components manufacturer shall be ISO 9001 registered.

10.13 FIBER OPTIC CABLE TERMINATIONS

10.13.1 GENERAL

Cables shall continue within conduit to the designated cable termination point. Components shall be the size and type required for the specified fiber. Fiber optic cable terminations may take place in several locations such as data node(s), video nodes, hubs, traffic signal (Adaptive Traffic Control Signal), and CCTV camera location(s).

10.13.2 CABLE TERMINATION

At the FDU, the cable jacket of outside plant cable, shall be removed exposing the Aramid yarn, filler rods, and buffer tubes. The exposed length of buffer tubes shall be at least the length recommended by the FDU manufacturer, which allows the tubes to be secured to the splice trays. Buffer tubes shall be secured to splice trays in which they are to be spliced. The remainder of the tubes shall be removed to expose sufficient length of fibers to properly install on splice trays, conforming to the requirements in "Splicing," of these special provisions.

When applicable, moisture-blocking gel shall be removed from exposed buffer tubes and fibers. The transition from the buffer tube to the bundle of jacketed fibers shall be treated by an accepted procedure for sleeve tubing, shrink tube and silicone blocking of the transition to prevent future gel leak. Manufacturer directions shall be followed to ensure gel will not flow from ends of buffer tubes throughout the specified temperature range. Individual fibers shall be stripped and prepared for splicing.

Factory terminated pigtails shall be spliced and placed in splice trays.

Fibers inside fiber optic cables entering Fiber Distribution Units (FDU) shall be terminated and labeled. Attention is directed to "Fiber Distribution Unit" of these special provisions.

10.13.3 DISTRIBUTION INTERCONNECT PACKAGE

Distribution involves connecting fibers to locations shown on the plans. The distribution interconnect package consists of FDUs with connector panels, couplers, splice trays, fiber optic pigtails and cable assemblies with connectors. The distribution interconnect package shall be assembled and tested by a company regularly engaged in the assembly of these packages. Attention is directed to "Fiber Optic Testing" of these special provisions. Distribution components shall be products of same manufacturers, regularly engaged in the production of these components with quality assurance programs.

10.13.4 FIBER OPTIC CABLE ASSEMBLIES AND PIGTAILS

Cables for cable assemblies shall be made of fiber meeting the performance requirements of these special provisions for the F/O cable being connected.

Pigtails shall be of simplex (one fiber) construction, in 900-μm tight buffer form, surrounded by Aramid yarn for strength, with a PVC jacket with manufacturer's identification information, and a nominal outer jacket diameter of 3 mm. Singlemode simplex cable jackets shall be yellow. Pigtails shall be factory terminated and tested and at least one meter in length.

Jumpers may be of simplex or duplex design. Duplex jumpers shall be duplex round cable construction and shall not have zipcord (Siamese) construction. Jumpers shall be at least 2 m in length.

Outer jackets of duplex jumpers shall be yellow. The 2 inner simplex jackets shall be contrasting colors to provide easy visual identification for polarity.

Connectors shall be ceramic ferrule ST or SC type for SMFO. Indoor or outdoor ST connector body housings shall be nickel-plated zinc or glass reinforced polymer construction. Indoor or outdoor SC connector body housings shall be glass reinforced polymer.

Associated couplers shall be the same material as connector housings.

Connectors shall be the 2.5 mm connector ferrule type with Zirconia Ceramic material with a PC (Physical Contact) pre-radiused tip.

All connectors shall have an operating temperature range from -40°C to +70°C. Insertion loss shall not exceed 0.4 dB for singlemode and return reflection loss on singlemode connectors shall be at least -35 dB. Connection durability shall be less than a 0.2 dB change per 500 mating cycles per EIA-455-21A (FOTP-21). Terminations shall provide a minimum 222 N pull out strength. Factory test results shall be documented and submitted to the Engineer prior to installing connectors. Singlemode connectors shall have a yellow color on the body and boot.

Field terminations shall be limited to splicing of adjoining cable ends and cables to ST or SC pigtails.

Connectors shall be factory-installed and tested.

Unmated connectors shall have protective caps installed.

10.14 FIBER OPTIC TESTING

10.14.1 GENERAL

Testing shall include tests on elements of passive fiber optic components at the factory, after delivery to the project site but prior to installation, and after installation but prior to connection to other portions of the systems. The Contractor shall provide personnel, equipment, instrumentation, and materials necessary to perform testing. The Engineer shall be notified at least two (2) Working Days prior to field tests. Notification shall include the exact location or portion of system to be tested.

Documentation of test results shall be provided to the Engineer within five (5) Working Days after testing.

A minimum of 15 working days prior to arrival of cable at the site, the Contractor shall provide detailed test procedures for field testing for the Engineer's review and approval. Procedures shall include tests involved and how tests are to be conducted. Test procedures shall include the model, manufacturer, configuration, calibration, and alignment procedures for proposed test equipment.

10.14.2 FACTORY TESTING

Documentation of compliance with fiber specifications as listed in the Fiber Characteristics Table shall be supplied by the original equipment manufacturer. Before shipment, but while on shipping reels, 100 percent of fibers shall be tested for attenuation. Copies of the results shall be maintained on file by the manufacturer with a file identification number for a minimum of 7 years, attached to cable reels in waterproof pouches, and submitted to the Contractor and to the Engineer.

10.14.3 ARRIVAL ON SITE

Cables and reels shall be physically inspected on delivery and 100 percent of fibers shall be attenuation tested to confirm that cable meets requirements. Failure of a fiber in the cable shall be cause for rejection of the entire reel. Test results shall be recorded, dated, compared and filed with copies accompanying shipping reels in weatherproof envelopes. Attenuation deviations from shipping records of greater than 5 percent shall be brought to the attention of the Engineer. Cables shall not be installed until completion of testing and written approval of the Engineer. Copies of traces and test results shall be submitted to the Engineer. If test results are unsatisfactory, the reel of F/O cable shall be considered unacceptable and records corresponding to that reel of cable shall be marked accordingly. Unsatisfactory reels of cable shall be replaced with new reels of cable at the Contractor's expense. New reels of cable shall be tested to demonstrate acceptability. Copies of test results shall be submitted to the Engineer.

10.14.4 AFTER CABLE INSTALLATION

Index matching gel will not be allowed in connectors during testing. After fiber optic cable has been pulled, but before breakout and termination, 100 percent of fibers shall be tested with an OTDR for attenuation. Test results shall be recorded, dated, compared, and filed with previous copies of these tests. Copies of traces and test results shall be submitted to the Engineer. If OTDR test results are unsatisfactory, the F/O cable segment of cable will be rejected. Unsatisfactory segments of cable shall be replaced with new segments, without additional splices, at the Contractor's expense. New cable segments shall be tested to demonstrate acceptability. Copies of test results shall be submitted to the Engineer.

10.14.5 SYSTEM CABLE VERIFICATION AT COMPLETION

Power Meter and Light Source

At the conclusion of OTDR testing, 100 percent of fiber links shall be tested end-to-end with a power meter and light source, in accordance with EIA Optical Test Procedure 171 and in the same wavelengths specified for OTDR tests. Tests shall be conducted in one direction as directed by the Engineer. The Insertion Loss (1C) shall be calculated. Test results shall be recorded, compared, and filed with the other recordings of the same links. Test results shall be submitted to the Engineer. These values shall be recorded and provided in summary table and submitted to the Engineer for review and approval within five (5) Working Days of completing the test.

OTDR Testing

After passive cabling systems have been installed and are ready for activation, 100 percent of fibers shall be tested with OTDR for attenuation at wavelengths of 1310 nm and 1550 nm. OTDR testing shall be performed in both directions (bi-directional) on fibers. Test results shall be generated from software of test equipment, recorded, dated, compared and filed with previous copies. A hard copy printout and an electronic copy on a CD of traces and test results shall be submitted to the Engineer. The average of the 2 losses shall be calculated and recorded in the Cable Verification Worksheet in Appendix D. The OTDR shall be capable of recording and displaying anomalies of at least 0.02 dB. Connector losses shall be displayed on OTDR traces.

Test Failures

If link loss, measured from the power meter and light source, exceeds the calculated link loss or the actual location of fiber ends does not agree with the expected location of fiber ends, fiber optic links will not be accepted. Unsatisfactory segments of cable or splices shall be replaced with new segments of cables or splices at the Contractor's expense. OTDR testing, power meter and light source testing, and Cable Verification Worksheet shall be completed for repaired links to determine acceptability. Copies of test results shall be submitted to the Engineer. Removal and replacement of segments of cable shall be considered as removal and replacement of a single contiguous length of cable connecting 2 splices and 2 connectors. Removal of a section containing a failure will not be allowed.

Passive Component Package Testing and Documentation

Components in the passive component package (FDUs, pigtails, jumpers, couplers, and splice trays) shall be from a manufacturer who is ISO 9001 registered.

Pigtails or jumpers shall be tested for insertion attenuation loss using optical power meters and light sources. Singlemode terminations shall be tested for return reflection loss. Values shall meet loss requirements specified and shall be recorded on tags attached to pigtails or jumpers.

After an assembly is complete, the manufacturer shall visually verify that tagging of loss values is complete. The manufacturer shall conduct an "end-to-end" optical power meter/light source test from pigtail ends to end of terminating points assuring continuity and overall attenuation loss values are acceptable.

Final test results shall be recorded with previous individual component values on forms assigned to individual FDU. Completed forms shall be dated and signed by the Manufacturer's Quality Control supervisor. One copy of the form shall be attached in a plastic envelope to the assembled FDU. Copies shall be provided separately to the Contractor and the Engineer, and shall be maintained on file by the manufacturer or supplier.

Assembled and completed FDU units shall be protectively packaged for shipment to the Contractor for installation.

Fiber Optic System Performance Margin Design Criteria

Installed system performance margin shall be at least 6 dB for links. If the design system performance margin is less than 6 dB, the Engineer shall be notified of the Contractor's plan to meet this requirement.

Active Component Testing

Transmitters and receivers shall be tested with power meters and light sources to record transmitter average output power (dBm) and receiver sensitivity (dBm).

All new fiber optic cable shall be fixed with identification bands in pull boxes and near termination points. Identification bands shall indicate that the cable is "INTERCONNECT" and the direction in which the cable is traveling (North-South or East-West).

11.0 TRAFFIC SIGNAL PRE TURN-ON REVIEW

The following steps should be followed for a typical traffic signal pre turn-on review:

A. Contractor completes all items relating to the operation of the signal. Striping and pavement markings must be complete. Contractor notifies Public Works Inspector once power equipment and wires are installed.

B. Contractor requests final electric permit inspection of service equipment. Once approved, Building Inspection will issue turn on request to Finance Department.

C. Contractor requests a pre-turn-on inspection through the Public Works Inspector. A one-week advance notice is required to schedule this inspection.

The pre turn-on inspection is not a final inspection. The Electric Technician will only inspect the signal for completeness. Contractor shall complete items as necessary and reschedule another pre-turn-on inspection through the Public Works Inspector.

D. Contractor requests a flashing pre-turn-on of the signal through the Public Works Inspector only after the Electric Technician finds the results of the pre-turn-on satisfactory. Contractor will flash the signal while the Electric Technician verifies the operation. Electric Technician also verifies cabinet wiring and auxiliary equipment in the traffic signal cabinet and the Tesco power cabinet. Depending on the workload of the Electric Technician, the inspection will take place within one week of the request. Deficient items will be noted and a list of deficient items will be supplied to the Contractor.

E. Contractor shall complete deficient items and request another flashing pre-turn-on through the Public Works Inspector. If an additional inspection is required due to non-compliance with the previous deficiency list, the Contractor will be charged the actual cost for the inspection.

F. If the flashing pre-turn-on is successful, the Contractor requests a final turn-on through the Public Works Inspector. Depending on the workload of the Electric Technician, Traffic Engineering, and the cabinet and video equipment manufacturers representatives, the turn-on will take place within one week of the request.

Signal turn-on shall only be performed on Tuesday, Wednesday, or Thursday. Turn-on shall start at 9:30 A.M. and shall be completed by 1:00 P.M.

G. After the final turn-on request and prior to the turn-on day, the following items will be performed:

1. Electric Technician installs the traffic signal controller, camera controller, detector amplifiers (if required) and the intersection is “run dark” for seven days prior to turn-on. Traffic Engineering will verify operation of detector and communications lines and equipment. Contractor shall repair any deficiencies found prior to turn-on.

2. Contractor to schedule cabinet manufacturer to be present on turn-on day.

3. Contractor will schedule the camera manufacturer to be present during the turn-on day.

12.0 TRAFFIC SIGNAL TURN-ON

The following items will be performed on the day of the turn-on:

A. Public Works Inspector and Traffic Engineering will walk the intersection and check all the signal heads and pedestrian heads for proper alignment including PV visors. Contractor will correct as required.

B. Electric Technician connects the traffic signal controller, camera controller, detector amplifiers (if required). Installs load switches, relays and any auxiliary equipment. Electric Technician will assist the camera manufacturer as necessary with the cable connections to the camera controller. Cabinet manufacturer will inspect the installation of items in the cabinet.

C. Traffic Engineering will check for the proper location of the cameras with the camera manufacturer. Contractor will provide the bucket truck and personnel to relocate the cameras as necessary to the requirements of Traffic Engineering.

D. Traffic Engineering will install the program card in the controller and verify against timing sheet.

E. Traffic Engineering and Electric Technician/Contractor/Cabinet manufacturer will place the signal in normal operation and Contractor will cover any stop signs.

F. Traffic Engineering and Electric Technician will verify operation of the signal and make any necessary changes to the timing. After the operation of the signal has been verified, the Public Works Inspector will notify Contractor to remove any existing stop signs.

The Engineer reserves the right to suspend the counting of working days, during the traffic signal turn-on, if unexpected or undue delays are encountered.

G. Contractor requests final inspection. Electric Technician, Traffic Engineering, and Public Works Inspector will inspect the traffic signal construction and prepare a deficiency list (compiled by the Public Works Inspector) to be delivered to the Contractor. Contractor will correct the work.

H. Once corrected, Contractor will request another inspection (if needed) through the Public Works Inspector. If a second inspection is required due to non-compliance with the previous deficiency list, the Contractor will be charged the actual cost for the second inspection.

Signal turn on shall be performed on Tuesday, Wednesday, or Thursday. Turn on shall start at 9:30 A.M. and shall be completed by 2:30 P.M.

13.0 WARRANTY

Contractor shall warrant all material and workmanship to be free from defects for a period of one year after acceptance. In the event that evidence of failure develops within one year, Contractor shall replace the faulty components at no cost to the City. A guaranty for this purpose is included as Document 00630, Guaranty.

14.0 PAYMENT

Any item of work not shown on the Bid but is required by the Contract Documents shall be considered as incidental and full compensation for same shall be considered included in the payment for the bid item(s) shown on the Bid.

Detector Loop Test Results

Intersection Location:

Contract No.: CE XX-XX-XX

Contractor:

Phase #	Lane #*	Type**	Loc.***	Meg	"L"	"R"	"Q"	By	Date

* Lane Closest To Center of Roadway is #1 Lane (1,2,3, etc.)

** P=Presence Detector, A= Advance Detector

***Head Loop (closest to stop bar)=A (A,B,C,D)

Meg = Megohms, "L" = Inductance,"R" = Resistance, "Q" = Quality Factor

END OF SECTION

THIS PAGE

WAS INTENTIONALLY

LEFT BLANK

SECTION 02863

SOUND BARRIERS

PART 1 GENERAL

1.1 WORK INCLUDED

A. This section includes materials, testing, and installation of sound barriers.

1.2 SYSTEM DESCRIPTION

A. Furnish and install complete sound barriers and vibration isolation systems, including appurtenant structural, mechanical and/or electrical mountings or connections required for compliance with manufacturer's installation requirements and compliance with applicable building codes and standards.

1.3 QUALITY ASSURANCE

A. Use adequate numbers of skilled workmen who are thoroughly trained and experienced in the necessary trades and crafts and who are completely familiar with the specified requirements and methods needed for proper performance of the work of this section.

1.4 REFERENCES

A. ASTM A164 Electrodeposited Coatings of Zinc on Steel

B. ASTM A307 Carbon Steel Bolts and Studs, 60 000 PSI Tensile Strength

C. ASTM A653 Steel Sheet, Zinc-Coated (Galvanized) or Zinc-Iron Alloy-Coated (Galvannealed) by the Hot-Dip Process

D. ASTM B633 Electrodeposited Coatings of Zinc on Iron and Steel

E. ASTM C423 Sound Absorption and Sound Absorption Coefficients by the Reverberation Room Method

F. ASTM E84 Surface Burning Characteristics of Building Materials

G. ASTM E136 Behavior of Materials in a Vertical Tube Furnace at 750°C

H. Fed Spec HH-1-558B Insulation Blocks, Boards, Blankets, Felts, Sleeving (Pipe and Tube Covering), and Pipe Fitting Covering, Thermal (Mineral Fiber, Industrial Type)

1.5 SUBMITTALS

A. Furnish the following submittals in accordance with Section 01330.

SUBMITTAL	DESCRIPTION	
Shop Drawings	Required per equipment shop drawing requirements.	.
Catalog Data	Required per catalog data requirements.	
Installation Instructions	Required per installation or application instruction requirements.	
O & M Instructions	Required per operation and maintenance instruction requirements	
Engineering Calculations	Required for vibration isolators per engineering calculations requirements.	
Material Samples	Required for acoustic panels on Owner's request	
Warranty	Furnish one-year warranty from date of final acceptance.	

1.6 DELIVERY, STORAGE AND HANDLING

A. Manufacturer's instruction and warranty requirements for delivery, storage and handling of sound barriers shall be strictly followed.

PART 2 PRODUCTS

2.1 ACCEPTABLE MANUFACTURERS

A. Acceptable manufacturers include Empire Acoustical Systems Silent Screen, Round Rock, TX or accepted equal.

2.2 MATERIALS

A. Sound barriers shall be constructed of the following materials:

ITEM	MATERIAL	SPECIFICATION
Bolts and Nuts	Galvanized Steel	ASTM A307 Galvanized per ASTM A164 or ASTM B633
Sound Absorptive Panels	Sheet steel	ASTM A653 Class G90 12-inch Panel Width 2¾" / 3¾ " thick
Face Panel	Sheet steel	ASTM A653 Class G90 22 gauge minimum Perforated per manufacturer's recommendations
Back Tray	Sheet steel	ASTM A653 Class G90 16 gauge
Sound Absorbing Batt	Mineral rock wool	Fed Spec HH-1-558B and ASTM E136 ½-inch setback from perforated panels 2 inches minimum thickness 6 ppf density Absorb < 1% water Noncorrosive Melting temperature above 2000°F Flame spread of 15 or less per ASTM E84 Incombustible per ASTM E136 Nonhygroscopic NRC of 1.05 STC of 35
Coating	Polyurethane	3-mil polyurethane powder coating Color selected by Owner

B. The following product design criteria, options and accessories are required:

ITEM	DESCRIPTION
Sound Absorbing Panels	Minimum Noise Reduction Coefficient (NRC) of 1.10 per ASTM C423

PART 3 EXECUTION

3.1 PREPARATION

A. Make field measurements needed to install sound barriers before submitting shop drawings or ordering. Make minor changes in dimensions and alignments as needed to avoid utilities or structural conflicts.

3.2 INSTALLATION

A. Furnish and install sound barriers at locations shown on Plans and Submittals.

B. The following installation standards shall be followed:
   1. Manufacturer's installation and warranty requirements
   2. Applicable OSHA and Cal OSHA regulations
   3. Applicable building and fire code requirements

C. Refer variances between the above documents and Contract Documents to Owner's Representative.

D. Flexible connectors shall be installed at points of attachment of piping or conduit to mechanical equipment. Flexible connectors shall be as close to mechanical equipment as possible and shall be installed on pipes that are parallel to equipment shafts.

3.3 FIELD QUALITY CONTROL

A. Field testing shall include the following:

ITEM	TEST FOR	TEST STANDARD (ASTM OR OTHER TEST STANDARD)	FREQUENCY	FIRST TEST PAID FOR BY	RETESTS PAID FOR BY
Vibration isolators	Noise	See standards under individual equipment items	1 test each item	Contractor	Contractor
Sound barriers and vibration isolators	Field Performance	Demonstrate compliance to Contract Documents and Manufacturers' printed Literature	1 test	Contractor	Contractor
	11 month Warranty Inspection	Demonstrate compliance to Contract Documents and Manufacturers printed Literature	1 test	Owner	Contractor

B. Provide services of factory authorized representative on-site as needed to provide the following:

   1. Installation assistance, inspection and startup of the complete system.
   2. Field testing and adjustment.

END OF SECTION

THIS PAGE
WAS INTENTIONALLY
LEFT BLANK

SECTION 03100

CONCRETE FORMWORK

PART 1 GENERAL

1.1 GENERAL

A. All forms shall be accurately and properly placed so cast-in-place concrete may be placed as indicated on the design Drawings and as specified. The forms shall produce a smooth concrete finish free from offsets or irregularities.

1.2 SUBMITTALS

A. All submittals of catalog data sheets, manufacturers' certificates of compliance and other data shall be in accordance with the Submittals section.

B. A manufacturer's certificate of compliance, which includes the name of the project and, when requested, copies of independent test results confirming compliance with specified requirements, shall be submitted to City Representative for the following materials:
1. Form Coating
2. Form Ties

PART 2 PRODUCTS

2.1 MATERIALS

FORMS

Prefabricated	Simplex "Industrial Steel Frame Forms", Symons "Steel Ply", Universal "Uni-form", or approved equal.
Plywood	Product Standard PS1, waterproof, resin-bonded, exterior type Douglas fir, face adjacent to concrete Grade B or better.
Fiberboard	ANSI/AHA A135.4, Class 1, tempered, water-resistant, concrete form hardboard.
Lumber	Straight, uniform width and thickness, and free from knots, offsets, holes, dents, and other surface defects.
Chamfer Strips	Clear white pine, surface against concrete planed.
Form Coating	Nonstaining and nontoxic after 30 days, VOC-compliant; Burke "Form Release (WB)", L&M Chemical "E Z Strip", Nox-Crete "Form Coating", Symons "Environmental Release EF", or approved equal.

2.2 FORMS

A. Forms shall be designed to produce hardened concrete having the shape, lines, and dimensions indicated on the Drawings. Forms shall conform to ACI 347 and the following additional requirements.

B. Forms for surfaces which will be exposed to view after construction is completed shall be constructed of prefabricated plywood panels, job-built of plywood, or lined with plywood or fiberboard. Forms for exposed surfaces shall be laid out in a regular and uniform pattern with the long dimension of panels vertical and all joints aligned. The forms shall produce finished surfaces that are free from offsets, ridges, waves, and concave or convex areas, within the tolerances specified herein.

C. Plywood or lined forms will not be required for surfaces which are normally submerged or not ordinarily exposed to view, such as the interior of manholes, basins, and reservoirs. Other types of forming materials, such as steel or unlined wood, may be used where plywood or lined forms are not required and may be used as backing for form linings.

D. All vertical concrete surfaces above footings shall be formed.

E. Flat segmented forms not more than 24 inches wide may be used for forming curved surfaces 25 feet in diameter or larger.

F. Design:
1. Forms shall be substantial and sufficiently tight to prevent leakage of mortar. Forms shall be braced or tied to maintain the desired position, shape, and alignment during and after concrete placement. Walers, studs, internal ties, and other form supports shall be sized and spaced so that permissible working stresses are not exceeded.

G. Form ties:
1. Form ties shall have removable end and permanently embedded body, and shall have sufficient strength and rigidity to support and maintain the form in proper position and alignment without the use of auxiliary spreaders. Cones shall be provided on the outer ends of each tie, and the permanently embedded portion shall be at least 1 inch back from the concrete face. Form ties for liquid-containing walls shall be provided with water stop washers located on the permanently embedded portions of the ties at the approximate center of the wall. Permanently embedded portions of form ties without threaded ends shall be constructed so that the removable ends are readily broken off without damage to the concrete. Through-wall tapered removable ties will not be acceptable. The type of form ties used shall be acceptable to City Representative.
2. Form ties in exposed surfaces shall be uniformly spaced and aligned in horizontal and vertical rows.

H. Edges and Corners:
1. Chamfer strips shall be placed in forms to bevel all salient edges and corners, except the top edges of walls and slabs which are to be tooled and edges which are to be buried. Equipment bases shall have formed beveled salient edges for all vertical and horizontal corners, unless specifically indicated otherwise on the Drawings. Unless otherwise noted, bevels shall be 3/4 inch wide.

PART 3 EXECUTION

3.1 PLACEMENT

A. The limits of each concrete pour shall be determined by Contractor and shall be acceptable to City Representative.

B. Before concrete is placed, forms shall be rigidly secured in proper position; all dirt, mud, water, and debris shall be removed from the space to be occupied by concrete; all surfaces encrusted with dried concrete from previous placements shall be cleaned; and the entire installation shall be acceptable to City Representative. Remove all frost, ice, and snow from within the formwork before concrete is placed.

3.2 TOLERANCES

A. Tolerances for cast-in-place concrete work shall be as stipulated in ACI 117, unless otherwise indicated. Formed surfaces stipulated in Article 3.4 of ACI 347 shall be considered Class A for architectural concrete and Class C for all other concrete work.

3.3 FORM COATING

A. All concrete forms shall have form release agent applied to them before placement of concrete.

3.4 FORM REMOVAL

A. Forms shall not be removed from structures until the concrete in the structures has sufficient strength to support the weight of the structure and any superimposed load, including loads from construction operations. Contractor shall be responsible for limiting any applied loadings. There shall be no evidence of damage to concrete and no excessive deflection or distortion of members due either to the removal of forms or to loss of support.

B. Supporting formwork shall not be removed from horizontal members until the concrete has attained at least 75 percent of the specified 28 day compressive strength as determined by cylinders made and cured in the field. Shores shall not be removed before concrete has attained 28 day compressive strength as specified in the Cast-in-Place Concrete section. Shoring shall be left in place and reinforced as necessary to carry any construction equipment or materials placed thereon.

C. When forms are removed before the specified curing is completed, measures shall be taken to immediately continue curing and to provide adequate thermal protection for the concrete.

END OF SECTION

THIS PAGE
WAS INTENTIONALLY
LEFT BLANK

SECTION 03150

CONCRETE ACCESSORIES

PART 1 GENERAL

1.1 GENERAL

A. All accessories shall be accurately placed and all joints shall be accurately and properly constructed so cast-in-place concrete can be placed as specified and as indicated on the drawings.

1.2 DRAWINGS AND DATA

A. All submittals of manufacturers' certificates of compliance, test data, reports, catalog data sheets and other data shall be in accordance with the Submittals section.

PART 2 PRODUCTS

2.1 MATERIALS

A. Water stops
   1. PVC: Extruded, virgin, elastomeric, polyvinyl chloride (PVC), white (no pigment), ribbed, 3/8 inch min thick. Reclaimed material will not be acceptable. Provide hog rings or grommets spaced at 12 inches on center entire length.
   2. Expandable, only at locations shown on drawings: Bentonite free. Chemically modified rubber, hydrophillic; ADEKA "Ultraseal MC-2010M", Greenstreak "Hydrotite CJ-1020-K", or approved equal. Adhesive as recommended by the manufacturer.
      a. Sealant for expandable water stop: Ultraseal P-201 by Adeka, Leakmaster by Greenstreak, or approved equal.

B. Expansion Joint Materials:
   1. Filler: Preformed sponge rubber, ASTM D1752, Type I.
   2. Filler adhesive: As recommended by manufacturer.

C. Polyethylene Film: NBS Product Standard PS17 or ASTM D4397, 6 mils or thicker.

PART 3 EXECUTION

3.1 CONSTRUCTION JOINTS

A. Construction joints shall be made at locations indicated on the drawings or where specified. Construction joints shall not be made at other locations without the concurrence of Owner’s Representative.

B. Location: Construction joints shall be located as follows:
   1. In Bottom Slab: Each bottom slab shall be divided into approximately square sections not to exceed 60 feet in their longest dimension.

3.2 EXPANSION AND CONTRACTION JOINTS

A. Expansion joint filler shall be firmly bonded to the previously poured joint face with a suitable adhesive, and the new concrete shall be poured directly against the joint filler. Accessible edges of each expansion and contraction joint shall be sealed as specified in the caulking section.

3.3 PLACEMENT

A. The limits of each concrete pour shall be determined by Contractor and shall be acceptable to Owner's Representative.

3.4 EMBEDMENTS

A. Anchor bolts, castings, steel shapes, conduits, sleeves, masonry anchors, and other objects that are to be embedded in the concrete shall be accurately positioned in the forms and securely anchored.

B. Unless installed in pipe sleeves, anchor bolts shall have sufficient threads to permit a nut to be placed on the concrete side of the form or template. A second nut shall be placed on the other side of the form or template, and the two nuts shall be so adjusted that the bolt will be held rigidly in proper position.

3.5 DUCT BANK JOINTS

A. Hardened surfaces that are to receive additional concrete shall be prepared by removing all loose particles, scum, and laitance so that the aggregate is exposed. The hardened surface shall then be thoroughly wetted and a thin coating of neat cement mortar shall be spread over the entire surface just before the fresh concrete is placed. The fresh concrete shall be puddled and spaded to eliminate any honeycomb or lack of mortar near the joint.

3.6 PLACEMENT AGAINST SUBGRADE

A. Where concrete is placed against rock, all loose pieces of rock shall be removed and the exposed surface cleaned with a high-pressure water spray.

B. Polyethylene Film: Where concrete is placed against gravel or crushed rock which does not contain at least 25 percent material passing a No. 4 sieve, such surfaces shall be covered with polyethylene film to protect the concrete from loss of water. Joints in the film shall be lapped at least 4 inches and taped.

END OF SECTION

SECTION 03200

CONCRETE REINFORCEMENT

PART 1 GENERAL

1.1 SCOPE

A. This section covers reinforcement for cast-in-place and precast concrete.

1.2 SUBMITTALS

A. Drawings and Data
1. All submittals of Drawing, manufacturers' certificates of compliance, certification of reinforcement, reinforcement bar lists, placement Drawing, test data, catalog data sheets and other data shall be in accordance with the Submittals section.
2. Bar lists and Drawing for the fabrication and placing of reinforcement shall be submitted for review and shall have sufficient plans, elevations, and sections to adequately detail and label all reinforcement. The bar lists and Drawing shall also include a reference to the structure in which the reinforcement will be installed and to the project drawing showing the reinforcement.

B. Manufacturer's Certificate of Compliance
1. A manufacturer's certificate of compliance, which includes the name of the project and, when requested, copies of independent test results confirming compliance with specified requirements, shall be submitted to the City Representative for the following materials:
a. Mechanical connections

PART 2 PRODUCTS

2.1 MATERIALS

Bars, Except Weldable	ASTM A 615, Grade 60, deformed
Bars, Weldable	ASTM A 706 or A 615, Grade 60, deformed, with maximum carbon equivalent of 0.55%
Bar Supports	CRSI Class 1, plastic protected; or Class 2, stainless steel protected
Mechanical Connections	Classified Type 2 per ACI 318. Dayton/Richmond "Dowel Bar Splicer" or "Coupler Splice" System, Bar-Lock “Coupler Systems” or Barsplice Products or Lenton by Erico, or approved equal.

2.2 REINFORCEMENT

A. Reinforcement shall be accurately formed and shall be free from loose rust, scale, concrete splatter, and contaminants which reduce bond. Unless otherwise indicated on the Drawing or specified herein, the details of fabrication shall conform to ACI 315 and ACI 318.

B. Splices: Splices shall conform to the details indicated on the Drawing. Splices at locations other than those indicated on the Drawing shall be submitted to the City Representative for review and concurrence.

C. Mechanical Connections: Mechanical connections shall be used only as indicated on the Drawing. Connections in adjacent bars shall be spaced at least 30 inches apart.

D. Welding: Except where indicated on the Drawing, welding or tack welding of reinforcement is not permitted. Preheating and welding shall conform to AWS D1.4. Reinforcement which has been welded improperly or without the City Representative's concurrence shall be removed and replaced.

PART 3 EXECUTION

3.1 STORAGE AND HANDLING

A. Reinforcing steel shall be carefully handled and shall be stored on supports which prevent the steel from touching the ground.

3.2 PLACEMENT

A. Reinforcement shall be accurately positioned on supports, spacers, hangers, or other reinforcement, and shall be secured in place with wire ties or suitable clips.

B. With the exception of contact splices, the clear distance between parallel bars shall not be less than 2-1/2 inches nor less than 3 bar diameters. Where reinforcement in beams is placed in two or more layers, the bars in the upper layer shall be placed directly above the bars in the lower layer.

C. Reinforcement for beams or slabs which are supported by concrete columns shall not be installed until after the concrete for the column has been placed.

D. Before concrete is placed, reinforcement shall be rigidly secured in proper position. All surfaces encrusted with dried concrete from previous placements shall be cleaned and the entire installation shall be acceptable to City Representative. Remove all frost, ice, and snow before concrete is placed.

3.3 PLACING CONCRETE

A. Concrete shall be placed and compacted in wall or column forms before any reinforcement is placed in the system to be supported by such walls or columns.

3.4 DUCT BANKS

A. All reinforcement and other magnetic materials installed in duct banks shall be installed parallel to the individual ducts, unless they enclose all the ducts of the duct bank.

END OF SECTION

SECTION 03300

CAST-IN-PLACE CONCRETE

PART 1 GENERAL

1.1 SECTION REQUIREMENTS

A. Submittals:
1. Drawings and Data. All submittals of drawings; manufacturers' certificates of compliance, recommendations, and test data; reports; catalog data sheets; and other data shall be in accordance with the Submittals section, unless otherwise specified herein.
2. Manufacturer's Certificate of Compliance. A manufacturer's certificate of compliance, which includes the name of the project and copies of independent test results confirming compliance with specified requirements, shall be submitted to the Owner’s Representative for the following materials when used:
   a. Cement.
   b. Admixtures.
   c. Fly Ash.

B. Ready-Mixed Concrete Producer Qualifications: ASTM C 94.

C. Comply with ACI 301, "Specification for Structural Concrete"; ACI 117, "Specifications for Tolerances for Concrete Construction and Materials"; and CRSI's "Manual of Standard Practice."

D. Storage and Handling: Cement, slag cement and fly ash shall be stored in suitable moistureproof enclosures. Cement, slag cement and fly ash which have become caked or lumpy shall not be used.

E. Aggregates shall be stored so that segregation and the inclusion of foreign materials are prevented. The bottom six inches of aggregate piles in contact with the ground shall not be used.

PART 2 PRODUCTS

2.1 MATERIALS

A. Deformed-Steel Welded Wire Reinforcement: ASTM A 497, flat sheet, hot-dipped galvanized per ASTM 123.

B. Supports for Reinforcement: Bolsters, chairs, spacers, and other devices for spacing, supporting, and fastening reinforcing welded wire fabric in place shall be plastic or galvanized steel compatible with galvanized welded wire fabric and complying with CRSI specifications.

C. Portland Cement: ASTM C 150, Type V. Low Alkali.
1. Use one brand of cement throughout project.

D. Fly Ash: ASTM C 618, Type F.

E. Aggregates: ASTM C 33, uniformly graded.
1. For exposed exterior surfaces, do not use fine or coarse aggregates that contain substances that cause spalling.

F. Water: Potable.

G. Admixtures, General: Provide concrete admixtures that contain not more than 0.1 percent chloride ions.
1. Water Reducing/Normal Set: ASTM C 494, Type A, except as otherwise specified herein.
2. Water Reducing/Retarding: ASTM C 494, Type D, except as otherwise specified herein.
3. Air-Entraining: ASTM C 260, certified by manufacturer to be compatible with other required admixtures.
4. Superplasticizing/Normal Set: ASTM C 494, Type F, extended slump life type, except as otherwise specified herein.
5. Superplasticizing/Retarding: ASTM C 494, Type G, extended slump life type, except as otherwise specified herein.
6. Shrinkage Reducing Admixture: Grace “Eclipse Plus,” BASF (Master Builders) “Tetraguard AS20,” or approved equal.

H. Joint Sealant: One-Part, low modulus, neutral-care silicone sealant complying with ASTM C 920 for Type S, Grade P, Class 25, suitable for diesel/oil submersion.

I. Moisture-Retaining Cover: ASTM C 171, polyethylene film or white burlap-polyethylene sheet.

2.2 MIXES

A. Mix Design: Using concrete materials acceptable to Owner’s Representative, a tentative concrete mixture shall be designed and tested in the laboratory for each size and combined gradation of aggregates and for each consistency as indicated and intended for use on the Work and as specified.

Concrete proportions shall be established based on laboratory trial mixtures that meet the following requirements:
1. The combination of materials shall be as proposed for use in the Work.
2. Mixtures shall conform with the limiting requirements specified herein.
3. The required average compressive strength, $f'cr$, of the trial mixture, using 6” X 12” cylinders, shall exceed the specified minimum acceptable compressive strength, $f'cr$, as required in Sections 2.2B and 2.2C.
4. Trial mixtures of the proportions and consistencies specified for the Work shall be prepared. The compressive strength of the cylinders made from the three trial mixtures shall produce a range of compressive strengths exceeding or encompassing the $f'cr$ required for the Work.
5. For each proposed concrete mixture that is required to be tested, at least three 6 by 12 inch compressive strength test cylinders shall be made for each age. Each change in the water-cementitious materials ratio shall be considered a new concrete mixture. Each mixture shall be tested at the ages of seven days and 28 days with two test cylinders broken at 28 days.
6. When a shrinkage reducing admixture is proposed, trial batches shall be prepared with and without the shrinkage reducing admixture.

B. Normal-Weight Concrete for all flatwork and other minor structures: Prepare design mixes, proportioned according to ACI 301, as follows:
1. Minimum Compressive Strength:
   a. Field, 7 days: 3,000 psi
   b. Field, 28 days ($f'c$): 4,000 psi
   c. Laboratory, 28 days ($f'cr$): 5,200 psi
2. Maximum Water-Cementitious Materials Ratio**:** 0.42
3. Maximum Coarse Aggregate Size: 1-1/2 inch

4. Maximum Slump:
   a. Before Adding Superplasticizer: 4 inches
   b. After Adding Superplasticizer: 8 inches
5. Air Content: Maintain within range permitted by ACI 301.
6. Fly Ash Replacement: 15-25 percent
7. Maximum Chloride Ion: 0.15 percent
8. Max Shrinkage, based on 4x4x11 inch specimen:
   a. Laboratory: 0.048 percent
   b. Field: 0.064 percent

C. Measure, batch, mix, and deliver concrete according to ASTM C 94.
   1. When air temperature is above 90 deg F, reduce mixing and delivery time to 60 minutes.
   2. Concrete must not be placed if air temperature is below 42 deg F.

2.3 TESTS AND REPORTS

A. Preliminary Review: Reports covering the source and quality of concrete materials and the concrete proportions proposed for the work shall be submitted to Owner's Representative for review before performing the required trial mixture designs and before concrete work is started.

B. Mixture Design Testing: All tests and reports required for preliminary review shall be made by an independent testing laboratory at the expense of Contractor specifically for this project. All materials shall be tested in accordance with the specified test methods and reports for these tests shall be prepared specifically for this project. If the source of any concrete materials is changed during the Contract, the materials and the new mixture design shall be tested in accordance with the specified preliminary review requirements and reports shall be submitted for review.
   1. Aggregates shall be sampled and tested in accordance with ASTM C 33. In addition, the bulk specific gravity of each aggregate shall be determined in accordance with ASTM C 127 and ASTM C 128.
   2. Concrete test specimens shall be made, cured, and stored in accordance with ASTM C 192 and tested in accordance with ASTM C 39.
   3. Slump shall be determined in accordance with ASTM C 143. Total air content shall be determined in accordance with ASTM C 231 and verified in accordance with ASTM C 138. Concrete temperature shall be determined in accordance with ASTM C 1064 and unit weight (mass) shall be determined in accordance with ASTM C 138. Water-soluble chloride ion shall be determined in accordance with ASTM C 1218.
   4. Initial set tests shall be made at ambient temperatures of 70°F and 90°F to determine compliance with the specified time for initial set. The test at 70°F shall be made using concrete containing the specified normal set/water-reducing admixture and, when required, air entraining admixture. The test at 90°F shall be made using concrete containing the specified retarding/water-reducing admixture and, when required, air entraining admixture. Initial set shall be determined in accordance with ASTM C 403.
   5. A preliminary test on a trial batch shall be conducted at the project site, using the proposed superplasticizer in the accepted mixture design to determine the correct dosage. When superplasticizer is not included in the trial mixture, the trial batch tested at the site shall be used to determine compatibility of the superplasticizer with the other materials used in the concrete, including the other admixtures.
   6. A drying shrinkage test shall be conducted on the preliminary trial batch with the maximum water-cementitious materials ratio used to qualify each proposed concrete mixture design using the concrete materials, including admixtures, that are proposed for the project. Three test specimens shall be prepared for each

test. Drying shrinkage specimens shall be 4 inch by 4 inch by 11 inch prisms with an effective gauge length of 10 inches, fabricated, cured, dried, and measured in accordance with ASTM C 157

C. Mixture Design Report: Design quantities and test results on each mixture shall be submitted for review and shall be accepted before concrete work is started. The report on each tentative concrete mixture and on the proposed concrete mixture shall be submitted to Owner's Representative and shall contain the following information:

1. Aggregate Reports (ASTM C 33)
   a. Source and type
   b. Fine and Coarse gradations
   c. Alkali-aggregate reactivity
   d. Combined fine and coarse aggregate gradation
2. Cement Mill Report
3. Cementitious Material: type, data sheet, and test report
4. Admixtures
   a. Data sheets and certifications for each required
   b. Manufacturer's approval letter
5. Job-specific laboratory trial mix
6. Compressive strength at 7 and 28 days
7. Mixture Proportions
   a. Slump
   b. Water content
   c. Water-cementitous materials ratio
   d. Brand, type, composition, and quantity of cement
   e. Brand, type, composition and quantity of fly ash
   f. Specific gravity of each aggregate
   g. Ratio of fine to total aggregates
   h. Air content
   i. Temperature
   j. Unit weight
8. Water-Soluble Chloride Ion Report
9. Shrinkage Report
10. Field Compression Test Evaluation Reports Taken at End of Delivery Truck Chute

PART 3 EXECUTION

3.1 CONCRETING

A. Construct formwork according to ACI 301 and maintain tolerances and surface irregularities within ACI 347R limits of Class A, 1/8 inch for concrete exposed to view and Class C, 1/2 inch for other concrete surfaces.

B. Comply with CRSI's "Manual of Standard Practice" for fabricating, placing, and supporting reinforcement.

C. Comply with ACI 304, "Guide for Measuring, Mixing, Transporting, and Placing Concrete," and as specified.

D. Before placing concrete, inspect and complete formwork installation, reinforcing steel, and items to be embedded or cast in. Repair any damage to paint on deck prior to pour per Section 99100.

E. Place concrete in a continuous operation and consolidate using mechanical vibrating equipment.

F. Protect concrete from damage. Repair surface defects in formed concrete and slabs.
   1. Patching Defective Areas: Repair and patch defective areas with cement mortar when acceptable to City.
   2. Repairing Unformed Surfaces: Test unformed surfaces, such as monolithic slabs, for smoothness and verify surface tolerances specified for each surface and finish. Correct low and high areas as specified. Test unformed surfaces sloped to drain for trueness of slope and smoothness by using a template having the required slope.
      a. Repair finished unformed surfaces containing defects that affect the concrete's durability. Surface defects include crazing and cracks in excess of 0.01 inch wide or that penetrate to the reinforcement regardless of width, spalling, popouts, honeycombs, rock pockets, and other objectionable conditions.
      b. Correct high areas in unformed surfaces by grinding after concrete has cured at least 14 days.
      c. Correct low areas in unformed surfaces during or immediately after completing surface finishing operations by cutting out low areas and replacing with patching mortar. Finish repaired areas to blend into adjacent concrete. Proprietary underlayment compounds may be used when acceptable to City.
      d. Repair defective areas, except random cracks and single holes not exceeding 1 inch in diameter, by cutting out and replacing with fresh concrete. Remove defective areas with clean, square cuts and expose reinforcing steel with at least 3/4 inch clearance all around. Dampen concrete surfaces in contact with patching concrete and apply bonding agent. Mix patching concrete of same materials to provide concrete of same type or class as original concrete. Place, compact, and finish to blend with adjacent finished concrete. Cure in same manner as adjacent concrete.
   3. Repair isolated random cracks and single holes 1 inch or less in diameter by dry-pack method. Groove top of cracks and cut out holes to sound concrete and clean of dust, dirt, and loose particles. Dampen cleaned concrete surfaces and apply bonding compound. Place dry-pack before bonding agent has dried. Compact dry-pack mixture in place and finish to match adjacent concrete. Keep patched area continuously moist for at least 72 hours.

G. Owner’s Field Control Testing: Field control tests, including aggregate gradation (if needed), slump, air content, and making compression test cylinders, shall be performed by Owner’s Representative or testing laboratory personnel. Contractor shall provide all facilities and the services of one or more employees as necessary to assist with the field control testing.
   1. Slump: A slump test shall be made for each 50 cubic yards of concrete. Slump shall be determined in accordance with ASTM C 143.
   2. Unit Weight: A unit weight test shall be made on concrete from each batch of concrete from which concrete compression test cylinders are made. Unit weight shall be determined in accordance with ASTM C 138.
   3. Concrete Temperature: A concrete temperature test shall be made on concrete from the first batch of concrete mixed each day and on concrete from each batch of concrete from which concrete compression test cylinders are made. Concrete temperature shall be determined in accordance with ASTM C 1064.
   4. Water-Soluble Chloride Ion: Water-soluble chloride ion testing shall be performed once for each 1,000 cubic yards of concrete in accordance with ASTM C 1218.
   5. Compression Tests: One set of four concrete compression test cylinders shall be made each day when 25 to 50 cubic yards of concrete is placed. One additional set of test cylinders shall be made from each additional 50 cubic yards, or major fraction thereof, placed in any one day. Two cylinders of each set shall be tested

at an age of seven days and the remaining cylinders shall be tested at an age of 28 days.

Test cylinders shall be 6 inches in diameter by 12 inches high and shall be made, cured, stored, and delivered to the laboratory in accordance with ASTM C 31 and tested in accordance with ASTM C 39.

Each set of compression test cylinders shall be marked or tagged with the date and time of day the cylinders were made, the location in the work where the concrete represented by the cylinders was placed, the number of the delivery truck or batch, the air content, the slump, the unit weight, and the concrete temperature.

6. Shrinkage Tests: Concrete shrinkage tests shall be performed once for each 1,000 cubic yards of concrete with controlled shrinkage that is placed and shall be made on concrete from a batch of concrete from which concrete compression test cylinders are made. Shrinkage testing shall be conducted as specified for the preliminary trial mixes.

   The average drying shrinkage of each set of test specimens cast in the field from concrete delivered to the site as measured at the 21 days' drying age shall not exceed the values indicated in 2.3C.

H. Evaluation and Acceptance of Concrete: Concrete will be evaluated for compliance with all requirements of the specifications. Concrete strength will be only one of the criteria used for evaluation and acceptance of the concrete. The results of all tests performed on the concrete and other data and information concerning the procedures for handling, placing, and curing concrete will be used to evaluate the concrete for compliance with the specified requirements. Compression tests will be evaluated in accordance with ACI 318 and as specified herein. A strength test shall be the average of the compressive strengths of two cylinders made from the same concrete sample tested at 28 days.

1. Compression Test Evaluation: Compressive strength test results will be evaluated for compliance with the specified strength requirements. The strength level of the concrete will be considered satisfactory when the averages of all sets of three consecutive strength tests equal or exceed the specified compressive strength, $f'c$, and no individual strength test result falls below the specified compressive strength by more than 500 psi.

END OF SECTION

SECTION 03480

PRECAST CONCRETE UTILITY STRUCTURES

PART 1 GENERAL

1.1 SUMMARY

A. Section includes design and construction of concrete utility structures. Structures may be plant-precast or cast-in-place concrete, at Contractor's option.

B. Related Sections:
1. Section 02019 - Earthwork
2. Section 03300 - Cast-in-Place Concrete

1.2 REFERENCES

A. ACI 301 (American Concrete Institute) - Structural Concrete for Buildings.

B. ACI 318 (American Concrete Institute) - Building Code Requirements for Structural Concrete.

C. ACI 350R (American Concrete Institute) – Environmental Engineering Concrete Structures.

D. ASTM C76 – Reinforced Concrete Pipe

E. ASTM A82 – Steel Wire, Plain, for Concrete Reinforcement

F. ASTM A185 – Steel Welded Wire Reinforcement, Plain for Concrete

G. ASTM A496 – Steel Wire, Deformed, for Concrete Reinforcement

H. ASTM A497 – Welded Deformed Steel Wire Fabric for Concrete Reinforcement.

I. ASTM A615 – Deformed and Plain Billet – Steel Bars for Concrete Reinforcement.

J. ASTM C150 – Portland Cement

K. ASTM C478 – Precast Reinforced Concrete Manhole Sections

L. ASTM C595 – Blended Hydraulic Cement

M. ASTM C857 – Minimum Structural Design Loading for Underground Precast Concrete Utility Structures

N. ASTM C858 – Underground Precast Concrete Utility Structures

O. ASTM C891 – Installation of Underground Precast Utility Structures

P. ASTM C923 – Resilient Connectors Between Reinforced Concrete Manhole Structures and Pipes.

Q. ASTM C990 – Joints for Concrete Pipe, Manholes, and Precast Box Sections Using Preformed Flexible Joint Sealants

R. ASTM C1107 – Packaged Dry, Hydraulic Cement Grout (Non-Shrink)

S. ASTM D698 – Test Methods for Laboratory Compaction Characteristics of Soil Using Standard Effort

T. CBC (State of California) California Building Code (Latest Edition).

U. PCI MNL-116 (Precast/Prestressed Concrete Institute) Manual for Quality Control for Plants and Production of Precast and Prestressed Concrete Products.

1.3 MODIFICATION OF REFERENCES

A. Accomplish work in accordance with ACI publications except as modified herein. Consider the advisory or recommended provisions to be mandatory, as though the word “shall” had been substituted for the words “should” or “could” or “may,” wherever they appear.

1.4 DESIGN REQUIREMENTS

A. The Contractor, or his Agent, shall design all precast concrete utility structures in accordance with CBC and ACI 350R, except as modified herein.

B. Loads: Design structures for following loads unless otherwise indicated or specified.
1. Dead Loads: Design for structure self weight and superimposed dead loads from supported materials and constructed items indicated.
2. Live Loads: 100 psf on all gratings, catwalks, slabs and roofs.
3. Traffic Loads: HS20-44 vehicle load per AASHTO Standard Specifications for Highway Bridges on gratings, slabs and roofs where indicated or specified.
4. Lateral Earth Pressure: Design for an equivalent fluid pressure of 85 psf with 100 psf lateral surcharge in the top 10’.
5. Equipment Loads: As indicated.

C. Hydrostatic Pressures and Buoyancy: Design for interior water and exterior water (groundwater) surface elevations indicated. Design walls supporting both interior water loads and exterior earth and/or groundwater loads to support both the full effect of interior water pressures and the full effect of the maximum exterior pressure, without considering that one load could minimize the effect of the other. Assume all water- containing structures to be empty for buoyancy and external pressure calculations. Design structures so that a minimum factor of safety of 1.5 for resisting buoyancy is achieved.

D. Minimum Reinforcement: Per ACI 350R.

E. Serviceability for Sanitary Exposures: Design structures for normal sanitary exposures in accordance with ACI 350R, unless severe environmental exposure is otherwise indicated or specified.

F. Joints: Permitted only where indicated, unless otherwise approved in writing by, and at sole discretion of City’s Representative. Design all joints to be watertight in accordance with ACI 350R or as otherwise indicated.

1.5 SUBMITTALS

A. Submit the following in accordance with Section 01330 – Submittal Procedures.

B. Shop Drawings: Indicate layout, fabrication details, reinforcement, connection details, support items, dimensions, openings and relationship to adjacent materials. Drawings shall be stamped and signed by a California registered civil engineer.

C. Submit manufacturer's catalog data on precast items.

D. Submit piping/valving layouts to confirm structure dimensions.

1.6 QUALITY ASSURANCE

A. Design concrete structures under direct supervision of a civil engineer experienced in design of this work and licensed in the State of California.

B. Perform plant precast work in accordance with PCI MNL-116.

1.7 DELIVERY, STORAGE, AND HANDLING (PRECAST CONCRETE)

A. Product storage and handling requirements to comply with manufacturers recommendations.

B. Handle precast members in position consistent with their shape and design. Lift and support only from support points.

C. Lifting or Handling Devices: Capable of supporting member in positions anticipated during manufacture, storage, transportation, and erection.

D. Protect members to prevent staining, chipping, or spalling of concrete.

1.8 COORDINATION

A. Coordinate concrete structure design and construction with design fabrication and installation of grating, covers, vault access doors, railings, gates, valves, equipment and other related construction.

B. Contractor shall provide detailed layouts of all pipe and fittings within utility structures and confirm spatial requirements and clearance before designing structure.

PART 2 PRODUCTS

2.1 MATERIALS

A. Concrete and Reinforcement: In accordance with Section 03300 – Cast-in-Place Concrete.

B. Concrete for precast structures shall conform to ASTM C478, C857 and C858.

C. Joints in walls for precast structures shall be tongue and groove, flush on inside and outside across the joint. No bell and spigot joints allowed.

D. Pipe Penetrations: Adjustable-linked rubber seal devices shall be used to provide seals around pipe penetrations through precast concrete vaults. Adjustable-linked rubber seal devices shall be Link-Seal, or approved equal.

E. Vault Access Doors shall be durable Hot Dipped Galvanized steel, manual opening as commercially manufactured, checker plate lid, provided as traffic rated, shall be equipped with stainless steel hardware, compression spring operators, an automatic hold-open arm with release handle, and a locking device. The frame shall incorporate a drain gutter with an outlet routed to the exterior of the precast lid. Manufacturer shall be Bilco, USF, or approved equal.

F. All mounting hardware for internal components shall be made of 304SS and shall conform to ASTM A240.

G. Bedding/base pad shall be Caltrans Class 2 Aggregate Base. Bedding shall be a minimum of 6-inches in thickness. Provide bedding per precast manufacturer's recommendations.

H. Grout shall conform to ASTM C1107 – Packaged Dry, Hydraulic Cement Grout (Non-Shrink).

2.2 FABRICATION (PRECAST CONCRETE)

A. Fabrication procedure to conform to PCI MNL-116.

B. Maintain plant records and quality control program during production of precast members. Make records available upon request.

C. Ensure reinforcing steel, anchors, inserts, plates, angles, and other cast-in items are embedded and located as indicated.

D. Tolerances: Conform to PCI MNL-116.

E. Source Quality Control: Sample and test concrete in accordance with Section 03300 – Cast-in-Place Concrete.

2.3 SOURCE QUALITY CONTROL (PRECAST CONCRETE)

A. Perform compressive strength, air entrainment, and slump tests as specified in Section 03300 – Cast-in-Place Concrete for all precast concrete structures.

PART 3 EXECUTION

3.1 FORMWORK

A. Construct formwork and install waterstops and accessories in accordance with Section 03300-Cast-in-Place Concrete.

3.2 REINFORCEMENT

A. Place reinforcement in accordance with Section 03300-Cast-in-Place Concrete.

3.3 CONCRETE

A. Place, finish, cure, protect and repair concrete in accordance with Section 03300-Cast-in-Place Concrete.

3.4 PRECAST STRUCTURES

A. Coordinate placement of inlet and outlet pipe or duct sleeves required by other sections.

B. Do not install structures under site conditions known to result in loads heavier than that for which the structure was designed.

C. Inspect precast concrete structures immediately prior to placement in the excavation to verify that they are internally clean and free from damage. Remove damaged units from the construction site and replace at no additional cost to the City.

D. Excavation and Backfill:
1. Excavate for manholes and structures in accordance with Section 02019 in the location and to depth shown. Provide clearance around the sidewalls of the structure as required for construction.
2. If groundwater is encountered, prevent accumulation of water in excavations. Place structures in a dry trench.
3. Where the possibility exists of a watertight structure becoming buoyant in a flooded excavation, take necessary steps to avoid flotation of the structure.

E. Bedding:
1. A stable and uniform bedding shall be provided for the structures and any protruding features of its joint and/or fittings. The bedding shall be compacted to a minimum of 90% of maximum density per AASHTO T99, or as shown in the plans. The bedding surface for the structure shall provide a firm foundation of uniform density throughout the entire length of the structure.
2. Place base pad, trowel top surface level.

F. To ensure safety, lift precast structures at the lifting points designated by the manufacturer.

G. When lowering manholes and drainage structures into the excavations and joining pipe to the units, take precautions to ensure that the interior of the pipeline and structure remains clean.

H. Set precast structures so that they firmly and fully bear on crushed stone bedding, compacted in accordance with the provisions of Section 02019 or on other support system shown on the Contract Drawings.

I. Assemble multi-section structures by lowering each section into the excavation. Lower, set level, and firmly position the base section before placing additional sections.

J. Joints:
1. Ensure joint integrity by removing all foreign materials from joint surfaces and verifying that sealing materials are placed properly. Avoid misalignment by using guide devices affixed to the lower section.
2. Joint sealing materials may be installed at the site or at the manufacturer’s plant.

3. All Tongue-and-Groove joints shall be thoroughly cleaned. Sections shall be mated and Hydraulic Cement Grout (Non-Shrink) complying with ASTM C1107 shall be applied liberally to the interior and exterior of the joint ensuring all voids are filled completely.

K. Verify that structures installed satisfy required alignment and grade.

L. Remove knockouts or cut structure to receive piping so as not to create openings more than that required to receive pipe. Fill annular space with mortar.

3.5 FIELD QUALITY CONTROL

A. Concrete
1. Sample and test concrete in accordance with Section 03300 – Cast-in-Place Concrete.

END OF SECTION

SECTION 05090

ANCHORAGE IN CONCRETE

PART 1 GENERAL

1.1 SCOPE

A. This section covers the procurement and installation of anchors in concrete for structural applications. It includes cast-in-place anchor bolts, adhesive anchors, expansion anchors, and epoxy grouted anchor bolts and reinforcing steel to be installed in concrete.

B. When this section is referenced by any equipment section, anchorage for that equipment, including anchors and anchor bolts, shall be as specified herein.

1.2 GENERAL

A. Unless otherwise specified or indicated on the Drawings, all anchors and anchor bolts in concrete shall have minimum diameter of 3/4 inch.

B. Unless otherwise indicated on the Drawings, all anchors and anchor bolts used shall be stainless steel.

1.3 SUBMITTALS

A. Data and catalog cuts indicating the manufacturer and types of adhesive anchors, expansion anchors, and epoxy grouts to be supplied shall be submitted in accordance with the submittal section. All anchorage products and systems used shall have a current product report on file with the International Code Council (ICC).

1.4 DELIVERY, STORAGE, AND HANDLING

A. Materials shall be handled, transported, and delivered in a manner which will prevent damage or corrosion. Damaged materials shall be promptly replaced. Materials shall be shipped and stored in original manufacturers' packaging.

PART 2 PRODUCTS

2.1 MATERIALS

A. Materials shall be as indicated below:

Reinforcing Bars	ASTM A615, Grade 60, deformed.
Reinforcing Bars, Weldable	ASTM A706, Grade 60, deformed.
Anchor Bolts and Nuts	
Carbon Steel	ASTM A307 or ASTM A36, with compatible nuts.
Stainless Steel	Bolts, ASTM F593, Alloy Group 2; nuts, ASTM F594, Alloy Group 2.
Galvanized Steel	Carbon steel bolts and nuts; hot-dip galvanized, ASTM A153 and A385.
Flat Washers	ANSI B18.22.1; of the same material as

	anchor bolts and nuts.
Threaded Rod Anchors and Nuts	
Carbon steel	ASTM A36, with compatible nuts.
Stainless steel	Rods, ASTM F593, Alloy Group 2; nuts, ASTM F594, Alloy Group 2.
Galvanized steel	Carbon steel rods and nuts; hot-dip galvanized, ASTM A153 and A385.
Adhesive Anchors for Concrete	
Threaded Rods and Nuts	As specified for Threaded Rod Anchors and Nuts and as recommended by the adhesive manufacturer.
Adhesive	Hilti "HIT HY 200"; Simpson “SET-XP”; ITW Ramset/Redhead "Epcon Ceramic 6" System; Powers Fasteners "Power Fast Epoxy Injection Gel" System; or approved equal.
Epoxy Grout for Reinforcing Bars, Threaded Rod Anchors, and Anchor Bolts	
Adhesive	
For Floors and Horizontal Surfaces	Sika "Sikadur 35, Hi-Mod LV"; ChemRex "Concresive Liquid LPL"; Sika "Sikadur 32 Hi-Mod", or equal.
For Vertical Surfaces and Overhead Applications	Sika "Sikadur 31 Hi-Mod Gel"; W.R. Meadows "Rezi-Weld Gel Paste State", or approved equal
Aggregate	As recommended by the epoxy grout manufacturer.
Water	Clean and free from deleterious substances.

2.2 ANCHORS

A. Adhesive Anchors

1. Only acceptable adhesive anchor systems shall be used. Acceptable systems shall include only those systems and products specified or specifically indicated by product name on the Drawings. Alternative anchoring systems may be used only when specifically accepted by City Representative. An acceptable adhesive anchor system may be used as an alternative in locations where epoxy grouted anchor bolts and epoxy grouted threaded rod anchors are specified or indicated.
2. Threaded rod anchors in adhesive anchor systems shall be furnished with a sufficient length to provide an embedment depth of at least 15 rod diameters and free of coatings that would weaken the bond with the adhesive. Unless otherwise required, single nut and washer shall be furnished for threaded rod anchors, adhesive anchors, and expansion anchors. Anchor bolts and threaded rod anchors that are to be epoxy grouted shall be clean and free of coatings that would weaken the bond with the epoxy.

B. Epoxy Grouted Anchor Bolts and Reinforcing

1. Epoxy grout for installing reinforcing steel dowels and anchor bolts not indicated to be adhesive anchors shall consist of a two-component liquid epoxy adhesive of viscosity appropriate to the location and application, and an inert aggregate

filler component, if recommended by the adhesive manufacturer. Components shall be packaged separately at the factory and mixed immediately before use.

PART 3 EXECUTION

3.1 GENERAL

A. Anchor bolts shall be installed at the locations indicated on the Drawings or as required by the equipment manufacturer.

B. Anti-seize thread lubricant shall be liberally applied to projecting, threaded portions of stainless steel anchors immediately before final installation and tightening of the nuts.

3.2 EPOXY GROUT

A. Epoxy grout components shall be packaged separately at the factory and shall be mixed immediately before use. Proportioning and mixing of the components shall be done in accordance with the manufacturers' recommendations.

B. An acceptable adhesive anchoring system may be used where epoxy grouted threaded rod anchors are indicated on the Drawings.

1. Preparation. Where indicated on the Drawings, anchor bolts, threaded rod anchors, and reinforcing bars shall be epoxy grouted in holes drilled into hardened concrete. Diameters of holes shall be as follows:

Item	Diameter of Hole
Reinforcing Bars and Threaded Rod Anchors	1/8 inch larger than the outside diameter of the bar or the rod.
Headed Anchor Bolts	Bolt diameter plus two (2) inches and sufficient to clear the bolt head.

The embedment depth for epoxy grouted anchor bolts, threaded rod anchors, and reinforcing bars shall be at least 15 bolt, rod, or bar diameters, unless otherwise indicated on the Drawings.

Holes shall be prepared for grouting as recommended by the epoxy grout manufacturer.

2. Installation. Anchor bolts, threaded rod anchors, and reinforcing bars shall be clean, dry, and free of grease and other foreign matter when installed. The bolts, rods, and bars shall be set and positioned and the epoxy grout shall be placed and finished in accordance with the recommendations of the grout manufacturer. Care shall be taken to ensure that all spaces and cavities are filled with epoxy grout, without voids.

3.3 ADHESIVE ANCHORS

A. Only acceptable adhesive anchor systems shall be used. Alternative anchoring systems may be used only when acceptable to City Representative. An acceptable adhesive anchor system may be used as an alternative in locations where epoxy grouted anchor bolts and threaded rod anchors are specified or indicated. The embedment depth for adhesive anchors shall be at least 15 rod diameters unless indicated on the Drawings. Temperature of substrate and epoxy grout during installation and curing shall not exceed manufacturers' recommendations.

B. Adhesive for adhesive anchors shall be statically mixed in the field during application. All proportioning and mixing of the components shall be in accordance with the manufacturers' recommendations.

C. Anchors shall be installed in holes drilled into hardened concrete or grout filled masonry. Diameter of holes shall be 1/16 inch larger than the outside diameter of the rod unless recommended otherwise by the anchor system manufacturer. Holes shall be prepared for insertion of the anchors by removing all dust and debris using procedures recommended by the adhesive manufacturer.

D. Adhesive anchors and holes shall be clean, dry, and free of grease and other foreign matter at the time of installation. The adhesive shall be placed, the rods shall be set and positioned, and the adhesive shall be finished, all in accordance with the recommendations of the material manufacturer. Care shall be taken to ensure that all spaces and cavities are filled with adhesive, without voids, and remain filled with adhesive until completion of the curing period. Adhesive shall be cured in accordance with the recommendations of the adhesive manufacturer.

E. Adhesive anchor installations require special inspection in accordance with CBC Section 1701 and manufacturer specifications. Contractor shall notify Owner two (2) working days advance notice for special inspections.

END OF SECTION

SECTION 05100

STRUCTURAL STEEL AND MISCELLANEOUS METAL

PART 1 GENERAL

1.1 SECTION INCLUDES

A. The work under this section consists of furnishing all labor, materials, tools, equipment, transportation, services, and supervision required to fabricate and install structural steel and miscellaneous metal, including items to be embedded in concrete.

1.2 REFERENCES

A. AISC – Manual of Steel Construction – Allowable Stress Design (ASD) and Load & Resistance Factor Design (LRFD)

B. AISC S303 – Code of Standard Practice for Steel Buildings and Bridges

C. ASTM A36/36M – Structural Steel

D. ASTM A53 – Hot-Dipped, Zinc-coated Welded and Seamless Steel Pipe

E. ASTM A123/A123M Zinc Coatings (Hot-Dip Galvanized) on Iron and Steel Products

F. ASTM A153/A153M Zinc Coating (Hot-Dip) on Iron and Steel Hardware

G. ASTM A307 – Carbon Steel Externally Threaded Standard Fasteners

H. ASTM A325 – High Strength Bolts for Structural Steel Joints

I. ASTM A449 – Quenched and Tempered Steel Bolts and Studs

J. ASTM A500 – Cold-Formed Welded and Seamless Carbon Steel Structural Tubing in Round and Shapes

K. ASTM A572 - Standard Specification for High-Strength Low-Alloy Columbium-Vanadium Structural Steel

L. ASTM A780 – Repair of Damaged and Uncoated Areas of Hot-Dip Galvanized Coatings

M. ASTM A992 – Standard Specification for Structural Steel Shapes

N. ASTM C1107 – Packaged Dry, Hydraulic-Cement Grout (Nonshrink)

O. ASTM F436 – Hardened Steel Washers

P. ASTM F593 – Stainless Steel Bolts, Hex Cap Screws, and Studs

Q. ASTM F594 – Stainless Steel Nuts

R. ASTM F844 – Washers, Steel, Plain (Flat), Unhardened for General Use

S. AWS A2.4 – Symbols for Welding, Brazing, and Nondestructive Examination

T. AWS D1.1 – Structural Welding Code

U. SSPC SP 6 – Commercial Blast Cleaning

1.3 SUBMITTALS

A. Evidence of conformance to the referenced standards and requirements shall be submitted for the following in accordance with the requirements of the Construction Submittal Requirements Section of Division 1.
   1. Submit shop drawings and fabrication details for approval prior to fabrication. Prepare in accordance with AISC 326, AISC 316 and AISC 317. Drawings shall not be reproductions of contract drawings. Include complete information for the fabrication and erection of the structure's components, including the location, type, and size of bolts, welds, member sizes and lengths, connection details, blocks, copes and cuts. Use AWS standard welding symbols.
   2. Mill Test Reports: Submit indicating structural strength, destructive and nondestructive test analysis.
   3. Welders Certificates: Certify welders employed on the Work, verifying AWS qualification within the previous 12 months.
   4. Welding Procedures and Qualification Test Records.

B. Shop fabrication details shall be submitted in accordance with the requirements of Division 1 before fabrication commences.

PART 2 PRODUCTS

2.1 MATERIALS

A. Structural shapes, bars and plates shall conform to ASTM A992 Grade 50 and shall be hot dip galvanized after fabrication in accordance with ASTM A123/A123M Grade 100 and ASTM A153 for hardware.

B. Pipe, excluding pipe piles, shall be Grade B, conforming to ASTM A53.

C. High-strength bolts shall be ASTM A325 Type 3 and anchor bolts shall be ASTM A449 as shown on the drawings. The bolt heads and the nuts of the supplied fasteners must be marked with the manufacturer's identification mark, the strength grade and type specified by ASTM specifications.

D. Nuts for ASTM A325 bolts shall be heavy hex style grade DH3 or C3. Nuts for ASTM A449 shall be ASTM A563 with F 436 flat washers. Unless otherwise specified, all washers shall be of the same alloy group, and shall have a specified minimum proof stress equal to or greater than the specified minimum full-size tensile strength of the externally threaded fastener.

E. Drilled-in concrete anchors shall be "Red Head," "Hilti", "Simpson" or approved equal.

F. Welding electrodes shall conform to the requirements of AWS D1.1 for the manual shielded metal arc or submerged arc welding process.

2.2 FABRICATION

A. Fabrication shall conform to the AISC Specification for the Design, Fabrication, and Erection of Structural Steel.

B. Welding shall conform to the American Welding Society Structural Welding Code, AWS D1.1.

C. All ferrous metal items shall be hot dip galvanized after fabrication in accordance with ASTM A123/A123M Grade 100. Hardware shall be galvanized in accordance with ASTM A153 and shall not be less than two ounces per square foot. Galvanizing shall be performed before shipment and shall be a hot dip process.

D. Preparation prior to galvanizing shall be by acid pickling. Galvanizing shall be performed the same day as pickling. After pickling and before galvanizing, all items shall be heated to 300 degrees F to expel hydrogen absorbed during pickling.

E. Components of bolted assemblies shall be galvanized before assembly. Welded assemblies shall be galvanized after welding.

F. Zinc coating shall adhere tenaciously to the steel surface, shall be free from blisters and excess zinc, and be even, smooth and uniform throughout. All cutting, punching, drilling and other machine work shall be performed as far as possible before galvanizing, the areas from which galvanizing has been removed shall be touched up in the manner described for repairs.

G. Cleaning shall be in accordance to SSPC SP 6. Maintain steel surfaces free from rust, dirt, oil, grease, and other contaminants through final assembly.

H. Galvanized items that are damaged shall be repaired with DuPont No. 67-744, Deluxe Galvanized Metal Primer, or approved equal, applied in accordance with the manufacturer's instructions.

PART 3 EXECUTION

3.01 IDENTIFICATION AND PROTECTION

A. Every item shall, before shipment, be clearly marked in waterproof paint with its piece number, and with the number of the Owner's Representative's Plan on which it appears.

B. The Contractor shall protect all items during storage and installation, and until the work has been accepted by the City.

3.02 INSTALLATION

A. Make all work square, plumb, straight and true, accurately fitted, with tight joints and intersections. Members shall have sharply defined profiles and be free from twists, bends and defects impairing strength and durability. Items not presenting a finished and workmanlike appearance will be rejected.

B. Clip off projecting edges and corners. Finish and dress surfaces, edges and welds, smoothly and neatly by grinding, chipping and wire brushing. Reduce sharp edges by grinding to (1/4 inch) radius unless otherwise specified on the contract drawings. Do not flame cut holes or enlarge holes by burning unless approved by the Owner's Representative.

C. Do not tighten anchor bolts set in concrete with impact torque wrenches. Punch, subpunch and ream, or drill bolt holes. Bolts, nuts, and washers shall be clean of dirt and rust and lubricated immediately prior to installation.

D. ASTM A325 bolts shall be tightened to a “snug tight” fit. “Snug tight” is the tightness that exists when plies in a joint are in firm contact. If firm contact of joint plies cannot be obtained with a few impacts of an impact wrench, or the full effort of a person using a spud wrench, notify the Owner’s Representative for further instructions.

E. ASTM A325-SC bolts shall be fully tensioned to the required minimum percent of their minimum tensile strength as per AISC Manual of Steel Construction, unless otherwise specified on the contract drawings. Give special attention to ensure that the proper tightening torque is applied. Bolts shall be installed in connection holes and initially brought to a snug tight fit. After initial tightening procedure, bolts shall than be fully tensioned, progressing from the most rigid part of the connection to the free edges.

F. ASTM A449 threaded fasteners shall be installed as shown on the contract drawings. Install ASTM A563 nuts and ASTM F436 flat washers for ASTM A449 threaded fasteners.

G. Fabricate and assemble structural assemblies in shop to the greatest extent possible. Fabricate items of structural steel in accordance with AISC S303 and as indicated on final shop drawings.

H. Welding procedures that conform to Section 3 of AWS D1.1 will be deemed prequalified.

I. Procedures other than those prequalified shall be qualified by tests as specified in Section 4 of AWS D1.1.

J. Welding shall be performed only by welders or operators who have been qualified in accordance with Section 4 of AWS D1.1, and their qualifications test records shall be made available to the Owner’s Representative.

K. Welds shall be of uniform width and size throughout their length. Each layer shall be smooth and free from slag, cracks, pinholes and undercut, and completely fused to the adjacent weld beads and base metal. The cover pass shall be free from coarse ripples, high crown deep ridges and valleys between beads, and shall blend smoothly and gradually into the surface of the base metal.

L. Fillet and groove welds shall be of specified size with full throat and the legs of uniform length.

M. Repair, chipping or grinding of welds shall not gouge, groove or reduce the base metal thickness.

N. Field welds will be permitted only where shown on the Contract Drawings. They shall be of the type and size indicated and shall be performed in accordance with AWS D1.1.

O. If reaming or cutting is deemed necessary to correct minor misfits, the approval of the Owner’s Representative shall first be obtained.

P. Welded or reamed areas shall be repaired with galvanized metal primer or epoxy coating, as appropriate, in accordance with the manufacturer’s instructions.

Q. Galvanized items which have been damaged or rusted shall be repaired in a method and with paint conforming to ASTM A780. Damaged or rusted areas shall be thoroughly cleaned by wire brushing or grinding. They shall then receive two brush coats of Dupont No. 67-774, Delux Galvanized Metal Primer or approved equal.

R. The coats shall have a combined dry film thickness of not less than six mils. Field welds shall be brushed-coated in the same manner, after cleaning and the removal of all slag. Do not heat surfaces to which repair paint has been applied.

END OF SECTION

THIS PAGE
WAS INTENTIONALLY
LEFT BLANK

SECTION 05400

COLD-FORMED METAL FRAMING

PART 1 GENERAL

1.1 SUMMARY

A. This section specifies materials and services required for installation of cold formed steel, including tracks and required accessories as shown and specified. This Section includes the following:
   1. Interior load-bearing steel stud walls.

1.2 RELATED WORK

A. Structural steel framing: Section 05100, STRUCTURAL STEEL AND MISCELLANEOUS METAL.

B. Gypsum board assemblies: Section 09260, GYPSUM BOARD ASSEMBLIES.

1.3 DESIGN REQUIREMENTS

A. Design steel in accordance with American Iron and Steel Institute Publication "Specification for the Design of Cold Formed Steel Structural Members", except as otherwise shown or specified.

B. Structural Performance: Fabricate and erect cold-formed metal framing to withstand design loads within limits and under conditions required.
   1. Design Loads: As indicated.
   2. Design framing systems to withstand design loads without deflections greater than the following:
      a. Exterior Load-Bearing Walls: Lateral deflection of L/360 of the wall height.
      b. Interior Load-Bearing Walls: Lateral deflection of L/360 the wall height.
      c. Exterior Non-load-Bearing Curtain wall: Lateral deflection of L/360 of the wall height.
      d. Floor Joists: Vertical deflection of L/240 of the span.
      e. Roof Trusses: Vertical deflection of L/240 of the span.
   3. Design framing systems to provide for movement of framing members without damage or overstressing, sheathing failure, connection failure, undue strain on fasteners and anchors, or other detrimental effects when subject to a maximum ambient temperature change of 120 degrees F.
   4. Design framing system to accommodate deflection of primary building structure and construction tolerances, and to maintain clearances at openings.
   5. Design exterior non-load-bearing curtain wall framing to accommodate lateral deflection without regard to contribution of sheathing materials.
   6. Owner’s Representative Responsibility: Engage a fabricator who assumes undivided responsibility for engineering cold-formed metal framing by employing a qualified professional engineer to prepare design calculations, shop drawings, and other structural data.

1.4 SUBMITTALS

A. Submit in accordance with Submittals Section.

B. Shop Drawings: Shop and erection drawings showing steel unit layout, connections to supporting members, and information necessary to complete installation as shown and specified.

C. Manufacturer's Literature and Data: Showing steel component sections and specifying structural characteristics.

D. For cold-formed metal framing indicated to comply with certain design loadings, include structural analysis data sealed and signed by the qualified professional engineer who was responsible for its preparation.

1.5 APPLICABLE PUBLICATIONS

A. Publications listed below form a part of this specification to extent referenced. Publications are referenced in text by basic designation only.

B. American Iron and Steel Institute (AISI):
1. Specification and Commentary for the Design of Cold-Formed Steel Structural Members (1996)

C. American Society of Testing and Materials (ASTM):
1. A36/A36M-08 Standard Specifications for Carbon Structural Steel
2. A123/A123M-09 Standard Specifications for Zinc (Hot-Dip Galvanized) Coatings on Iron and Steel Products
3. A153/A153M-09 Standard Specifications for Zinc Coating (Hot-Dip) on Iron and Steel Hardware
4. A307-10 Standard Specifications for Carbon Steel Bolts and Studs
5. A653/A653M-10 Standard Specifications for Steel Sheet, Zinc-Coated (Galvanized) or Zinc-Iron Alloy-Coated (Galvannealed) by the Hot-Dip Process
6. C1107/C1107M-08 Standard Specifications for Packaged Dry, Hydraulic-Cement Grout (Non-shrink)
7. E488-96(R2003) Standard Test Methods for Strength of Anchors in Concrete and Masonry Elements
8. E1190-95(R2007) Standard Test Methods for Strength of Power-Actuated Fasteners Installed in Structural Members

D. American Welding Society (AWS):
1. D1.3/D1.3M-08 Structural Welding Code-Sheet Steel

E. Military Specifications (Mil. Spec.):
1. MIL-P-21035B Paint, High Zinc Dust Content, Galvanizing Repair

PART 2 PRODUCTS

2.1 MATERIALS

A. Sheet Steel for joists, studs and accessories 16 gage and heavier: ASTM A653, structural steel, zinc coated G60, with a yield of 50 ksi minimum.

B. Sheet Steel for joists, studs and accessories 18 gage and lighter: ASTM A653, structural steel, zinc coated G60, with a yield of 33 ksi minimum.

C. Galvanizing Repair Paint: MIL P 21035B.

D. Nonmetallic, Non-shrink Grout: Premixed, nonmetallic, noncorrosive, nonstaining grout containing selected silica sands, Portland cement, shrinkage-compensating agents, plasticizing and water-reducing agents, complying with ASTM C1107, with fluid consistency and a 30 minute working time.

2.2 WALL FRAMING

A. Steel Studs: Manufacturer's standard C-shaped steel studs of web depth indicated, with lipped flanges, and complying with the following:
   1. Design Uncoated-Steel Thickness:
      0.0598 inch (16 gage)
   2. Flange Width:
      2 inches
   3. Web: Punched.

B. Steel Track: Manufacturer's standard U-shaped steel track, unpunched, of web depths indicated, with straight flanges, and complying with the following:
   1. Design Uncoated-Steel Thickness: Matching steel studs.
   2. Flange Width: Manufacturer's standard deep flange where indicated, standard flange elsewhere.

2.3 JOIST FRAMING

A. Steel Joists: Manufacturer's standard C-shaped steel joists, unpunched, of web depths indicated, with lipped flanges, and complying with the following:
   1. Design Uncoated-Steel Thickness: 0.0598 inch (16 gage).
   2. Flange Width: 2 inches.

B. Steel Joist Track: Manufacturer's standard U-shaped steel joist track, unpunched, of web depths indicated, with straight flanges, and complying with the following:
   1. Design Uncoated-Steel Thickness: Matching steel joists.
   2. Flange Width: 2 inches.

2.4 FRAMING ACCESSORIES

A. Fabricate steel framing accessories of the same material and finish used for framing members, with a minimum yield strength of 50 ksi.

B. Provide accessories of manufacturer's standard thickness and configuration, unless otherwise indicated, as follows:
   1. Supplementary framing.
   2. Bracing, bridging, and solid blocking.
   3. Web stiffeners.
   4. Gusset plates.
   5. Deflection track and vertical slide clips.
   6. Stud kickers and girts.
   7. Joist hangers and end closures.
   8. Reinforcement plates.

2.5 ANCHORS, CLIPS, AND FASTENERS

A. Steel Shapes and Clips: ASTM A36, zinc coated by the hot-dip process according to ASTM A123.

B. Cast-in-Place Anchor Bolts and Studs: ASTM A307, Grade A, zinc coated by the hot-dip process according to ASTM A153.

C. Expansion Anchors: Fabricated from corrosion-resistant materials, with capability to sustain, without failure, a load equal to 5 times the design load, as determined by testing per ASTM E488 conducted by a qualified independent testing agency.

D. Power-Actuated Anchors: Fastener system of type suitable for application indicated, fabricated from corrosion-resistant materials, with capability to sustain, without failure, a load equal to 10 times the design load, as determined by testing per ASTM E1190 conducted by a qualified independent testing agency.

E. Mechanical Fasteners: Corrosion-resistant coated, self-drilling, self-threading steel drill screws. Low-profile head beneath sheathing, manufacturer's standard elsewhere.

2.6 REQUIREMENTS

A. Welding in accordance with AWS D1.3

B. Furnish members and accessories by one manufacturer only.

PART 3 EXECUTION

3.1 FABRICATION

A. Framing components may be preassembled into panels. Panels shall be square with components attached.

B. Cut framing components squarely or as required for attachment. Cut framing members by sawing or shearing; do not torch cut.

C. Hold members in place until fastened.

D. Fasten cold-formed metal framing members by welding or screw fastening, as standard with fabricator. Wire tying of framing members is not permitted.
   1. Comply with AWS requirements and procedures for welding, appearance and quality of welds, and methods used in correcting welding work.
   2. Locate mechanical fasteners and install according to cold-formed metal framing manufacturer's instructions with screw penetrating joined members by not less than 3 exposed screw threads.

E. Where required, provide specified insulation in double header members and double jamb studs which will not be accessible after erection.

3.2 ERECTION

A. Handle and lift prefabricated panels in a manner as to not distort any member.

B. Securely anchor tracks to supports as shown.

C. At butt joints, securely anchor two pieces of track to same supporting member or butt weld or splice together.

D. Plumb, align, and securely attach studs to flanges or webs of both upper and lower tracks.

E. All axially loaded members shall be aligned vertically to allow for full transfer of the loads down to the foundation. Vertical alignment shall be maintained at floor/wall intersections.

F. Install jack studs above and below openings and as required to furnish support. Securely attach jack studs to supporting members.

G. Install headers in all openings that are larger than the stud spacing in that wall.

H. Attach bridging for studs in a manner to prevent stud rotation. Space bridging rows as shown.

I. Studs in one piece for their entire length, splices will not be permitted.

J. Provide a load distribution member at top track where joist is not located directly over bearing stud.

K. Provide joist bridging and web stiffeners at reaction points where shown.

L. Provide end blocking where joist ends are not restrained from rotation.

M. Provide an additional joist under parallel partitions, unless otherwise shown, when partition length exceeds one half joist span and when floor and roof openings interrupt one or more spanning members.

N. Provide temporary bracing and leave in place until framing is permanently stabilized.

O. Do not bridge building expansion joints with cold-formed metal framing. Independently frame both sides of joints.

P. Fasten reinforcement plate over web penetrations that exceed size of manufacturer’s standard punched openings.

3.3 TOLERANCES

A. Vertical alignment (plumbness) of studs shall be within L/960th of the span.

B. Horizontal alignment (levelness) of walls shall be within L/960th of their respective lengths.

C. Spacing of studs shall not be more than 1/8 inch +/- from the designed spacing providing that the cumulative error does not exceed the requirements of the finishing materials.

D. Prefabricated panels shall be not more than 1/8 inch +/- out of square within the length of that panel.

3.4 FIELD REPAIR

A. Touch up damaged galvanizing with galvanizing repair paint.

END OF SECTION

THIS PAGE
WAS INTENTIONALLY
LEFT BLANK

SECTION 07210

THERMAL INSULATION

PART 1 GENERAL

1.1 SUMMARY

A. Section Includes: Provide thermal batt insulation with integral vapor retarder and accessories as required for complete installation.

B. Related Work:
1. Section 07468: METAL SIDING.
2. Section 09260: GYPSUM BOARD ASSEMBLIES.

1.2 SUBMITTALS

A. Product Data: Furnish manufacturer's literature for each type of insulation.
1. Submit Underwriter's Laboratory approval numbers for required fire ratings; approvals of other laboratories contingent upon acceptance of applicable authorities.

1.3 QUALITY ASSURANCE

A. Sustainability Requirements: Comply with CALGreen requirements including those relative to energy efficiency.

PART 2 - PRODUCTS

2.1 MATERIALS

A. System Description:

1. Where used in exposed ceiling: provide thermal batt insulation with integral white vinyl faced vapor retarder and accessories.
2. Where fully enclosed provide thermal batt insulation with kraft paper facing.

B. Thermal Batt Insulation: Preformed slag mineral or glass fiber with thermosetting resin binders, conforming to ASTM C665; formaldehyde-free.
1. Manufacturers:
a. Thermafiber, Inc.
b. Johns Manville.
c. Owens-Corning Fiberglas Corp.
d. Manufacturer of pre-engineered structure in Section 13 34 00.
e. Substitutions: Refer to Division 1.
2. R-Value: Roofing: Minimum R-19, Walls: Minimum R-13 unless otherwise indicated.

3. Flame Spread/Smoke Density Rating: Maximum 200/450, ASTM E84.
4. Vapor Retarder: Special white vinyl vapor retarder on exposed (downward) side.

C. Penetration Type Insulation Supports: Galvanized or electroplated steel penetration supports with adhesive attachment to substrate and support disc.
1. Finish: White to match vinyl facing on insulation.

D. Vapor Retarder Tape: Minimum 2" wide self-adhering white vinyl faced type (matching insulation) designed to maintain vapor retarder integrity and complying with fire resistance ratings as required by applicable codes.

E. Accessories: Furnish as recommended by insulation manufacturer for insulation types, substrates, and conditions involved.

PART 3 - EXECUTION

3.1 EXAMINATION

A. Verify substrate and adjacent materials are dry and ready to receive insulation; beginning installation signifies acceptance of conditions.

B. Ensure mechanical and electrical items affecting work are properly placed, complete, and have been inspected prior to commencement of installation.

3.2 INSTALLATION

A. Install insulation in accordance with manufacturer's instructions with vapor retarder toward inside of building.

B. Cut and trim insulation neatly, to fit spaces.
1. Backed Insulation: Use insulation free of ripped backs and edges.

C. Fit insulation tight within spaces and tight to and behind mechanical and electrical services within insulation plane; leave no gaps or voids; maintain integrity of thermal barrier.

D. Use penetration supports as necessary to assure permanent installation.

E. Taping: Tape joints and tears in vapor retarder, including joints between insulation and surrounding construction, to ensure vapor-tight installation.

END OF SECTION

SECTION 07468

METAL SIDING

PART 1 GENERAL

1.1 SUMMARY

A. Section includes preformed metal siding system for walls, with insulation, related flashings and accessory components.

B. Related Sections:
   1. Section 13340 - PRE-ENGINEERED STRUCTURES.

1.2 REFERENCES

A. American Society of Civil Engineers:
   1. ASCE 7-10 - Minimum Design Loads for Buildings and Other Structures.

B. ASTM International:
   1. ASTM A666 - Standard Specification for Austenitic Stainless Steel Sheet, Strip, Plate, and Flat Bar.
   2. ASTM A755/A755M - Standard Specification for Steel Sheet, Metallic Coated by the Hot-Dip Process and Prepainted by the Coil-Coating Process for Exterior Exposed Building Products.
   3. ASTM A792/A792M - Standard Specification for Steel Sheet, 55% Aluminum-Zinc Alloy-Coated by the Hot-Dip Process.
   4. ASTM B209 - Standard Specification for Aluminum and Aluminum-Alloy Sheet and Plate.
   5. ASTM C665 - Standard Specification for Mineral-Fiber Blanket Thermal Insulation for Light Frame Construction and Manufactured Housing.
   6. ASTM D226 - Standard Specification for Asphalt-Saturated Organic Felt Used in Roofing and Waterproofing.
   7. ASTM E84 - Standard Test Method for Surface Burning Characteristics of Building Materials.
   8. ASTM E119 - Standard Test Methods for Fire Tests of Building Construction and Materials.
   9. ASTM E330 - Standard Test Method for Structural Performance of Exterior Windows, Curtain Walls, and Doors By Uniform Static Air Pressure Difference.

1.3 SYSTEM DESCRIPTION

A. System: Preformed and prefinished metal siding system of vertical profile; site assembled; with subgirt framing assembly.

1.4 PERFORMANCE REQUIREMENTS

A. Components: Design and size components to withstand dead and live loads caused by positive and negative wind pressure acting normal to plane of wall as calculated in accordance with applicable code.
   1. Design Pressure: Minimum 20 lb/sq ft.

B. Maximum Allowable Deflection of Panel: 1/180 of span.

C. Movement: Accommodate movement within system without damage to components or deterioration of seals, movement within system; movement between system and perimeter components when subject to seasonal temperature cycling; dynamic loading and release of loads; deflection of structural support framing.

D. Drainage: Provide positive drainage to exterior for moisture entering or condensation occurring within panel system.

E. Products: Provide continuity of thermal barrier at building enclosure elements in conjunction with thermal insulating materials.

1.5 QUALITY ASSURANCE

A. Surface Burning Characteristics:
   1. Insulation: Maximum 25/450 flame spread/smoke developed index when tested in accordance with ASTM E84.

B. Perform Work in accordance with 2013 California Building Codes.

C. Maintain one copy of document on site.

1.6 QUALIFICATIONS

A. Manufacturer: Company specializing in manufacturing products specified in this section with minimum three years documented experience.

B. Installer: Company specializing in performing Work of this section with minimum three years documented experience approved by manufacturer**.**

1.7 DELIVERY, STORAGE, AND HANDLING

A. Protect panels from accelerated weathering by removing or venting sheet plastic shipping wrap.

B. Store prefinished material off ground protected from weather, to prevent twisting, bending, or abrasion, and to provide ventilation. Slope metal sheets to ensure drainage.

C. Prevent contact with materials capable of causing discoloration or staining.

PART 2 PRODUCTS

2.1 SUSTAINABILITY CHARACTERISTICS

A. Materials and Resources Characteristics:
   1. Recycled Content Materials: Furnish materials with maximum available recycled content/

2.2 COMPONENTS

A. Exterior Panel and Other Sheet Materials: precoated steel stock profile as indicated on Drawings.
   1. Precoated Galvanized Steel: ASTM A755/A755M; G90; shop precoated with manufacturer’s standard thermosetting coating. Exposed Exterior Surfaces: Color as selected.

B. Subgirts: manufacturer’s standard profile; to attach panel system to structural frame. Thickness as required to support specified loads within specified deflection limitations.

C. Internal and External Corners: Same material, thickness, and finish as exterior sheets; profile to suit system; brake formed to required angles. Mitered internal corners to be back braced with thick pre-coated sheet stock to maintain continuity of profile.

D. Expansion Joints: Same material, thickness and finish as exterior sheets; manufacturer's standard brake formed concealed type, of profile to suit system.

E. Trim, Closure Pieces, Caps, Flashings: Same material, thickness and finish as exterior sheets; brake formed to required profiles.

F. Anchors: Stainless steel.

2.3 ACCESSORIES

A. Gaskets: Manufacturer's standard type suitable for use with system, permanently resilient; ultraviolet and ozone resistant.

B. Sealants: Manufacturer's standard type suitable for use with installation of system; non-staining, non-shrinking and non-sagging; ultra-violet and ozone resistant; color to match siding.

C. Fasteners: Manufacturer's standard type to suit application; stainless steel; fastener cap same color as exterior panel.

D. Power Actuated Fasteners: Steel, hot dip galvanized; fastener cap same color as exterior panel.

E. Field Touch-up Paint: As recommended by panel manufacturer.

F. Bituminous Paint: Asphalt base.

2.4 FABRICATION

A. Form sections to shape indicated on Drawings, accurate in size, square, and free from distortion or defects.

B. Form pieces in longest practicable lengths.

C. Panel Profile: Manufacturer’s standard profile as indicated on Drawings.

D. Fabricate corners in one continuous piece with minimum 18 inch returns.

PART 3 EXECUTION

3.1 EXAMINATION

A. Verify building framing members are ready to receive panel system.

3.2 INSTALLATION

A. Protect surfaces in contact with cementitious materials and dissimilar metals with bituminous paint. Allow to dry prior to installation.

B. Fasten siding to structural supports; aligned, level, and plumb.

C. Locate joints over supports.

D. Use concealed fasteners unless otherwise approved by Architect/Engineer.

E. Seal and place gaskets to prevent weather penetration. Maintain neat appearance.

3.3 ERECTION TOLERANCES

A. Maximum offset from indicated alignment between adjacent members butting or in line: 1/16 inch.

B. Maximum variation from plane or location indicated on drawings: 1/8 inch.

3.4 CLEANING

A. Remove site cuttings from finish surfaces.

B. Clean and wash prefinished surfaces with mild soap and water; rinse with clean water.

END OF SECTION

SECTION 07600

FLASHING AND SHEET METAL

PART 1 GENERAL

1.1 SUMMARY

A. Section Includes: Provide metal flashings and sheet metal including accessories as required for complete weathertight installation.
   1. Flashing and sheet metal includes gutters, Schedule 40 pipe downspouts, rainwater leaders, reglets, and similar fabricated components.
   2. Provide concealed sealants used in conjunction with installation of metal flashing and sheet metal.
   3. Provide miscellaneous sheet metal flashing and reglets not provided by other trades or suppliers.
      a. Where reglets are to be installed in conjunction with other work, provide in adequate time for installation.
      b. Where reglets are to be surface applied, provide continuous gasket between reglet and surface.

B. Related Sections:
   1. Section 07950: EXPANSION JOINT COVER ASSEMBLIES.
   2. Section 10210: WALL LOUVERS.

1.2 REFERENCES

A. Sheet Metal and Air Conditioning Contractors National Association (SMACNA): Architectural Sheet Metal Manual.

1.3 SUBMITTALS

A. Product Data: Furnish literature for manufactured products.

B. Shop Drawings: Clearly indicate dimensioning, layout, general construction details including closures, flashings, locations and types of sealants, anchorages, and method of anchorage.

C. Samples: Furnish samples of typical metal flashing fabrication indicating standard soldered joints and edge conditions.

1.4 DELIVERY, STORAGE AND HANDLING

A. Provide strippable film protective covering on shop finished flashing materials to protect materials through shipping, fabrication and installation.

1.5 WARRANTY

A. Extended Correction Period: Provide for correcting failure of system to resist damage from anticipated sources including damage from wind and water

penetration. Repair system and pay for or replace damaged materials and surfaces.

1. Period: Two years.

PART 2 PRODUCTS

2.1 MATERIALS

A. System Description: Provide flashing and sheet metal including reglets and accessories as required for complete weathertight installation.

B. Design Criteria: Allow for movement of components without causing buckling, failure of joint seals, undue stress on fasteners or other detrimental effects, when subject to 100 year seasonal temperature ranges.

C. Flashing and Sheet Metal:

1. Galvanized Steel: ASTM A924 and A653 G90 galvanized steel; minimum 24 gage.
    a. Mill phosphatized where indicated to be field painted.
    b. Location (Concealed): Where indicated, if not otherwise indicated, provide where flashing will not be exposed to view from exterior of building and where not exposed to view from spaces within building.
2. Shop Finished Galvanized Steel Flashing and Sheet Metal: ASTM A924 and A653 G90 galvanized steel; minimum 24 gage; with factory applied fluoropolymer coating based on Kynar 500 or Hylar 5000.
    a. Manufacturers:
        1) Merchant & Evans Industries, Inc./Customform.
        2) Ryerson Div. BASF/Color Klad.
        3) Substitutions: Refer to Division 1.
    b. Location (Exposed): Where indicated, if not otherwise indicated, provide where flashing will be exposed to view from exterior of building, and where exposed to view from spaces within building.
    c. Color: As selected by Architect from manufacturer's full range of nonmetallic colors.
    d. Touch-up Paint for Prefinished Sheet Metal: Type recommended by fluoropolymer manufacturer for field touch-up.
3. Anodized Aluminum Sheet: ASTM B209, 5005-H14, with minimum thickness of 0.050” unless otherwise indicated.
    a. Clear Anodized Coating: AAMA 607.1 clear anodized, Architectural Class I 0.018mm or thicker coating.
4. Extruded Aluminum: ASTM B221, alloy 6063-T52, with minimum thickness of primary legs 0.080” unless otherwise indicated; clear anodized unless otherwise indicated.
5. Prefinished High-Performance Coated Aluminum: Manufacturer’s standard two coat thermocured fluoropolymer system containing not less than 70 percent polyvinylidene fluoride resin by weight; AAMA 605.2 and AA-C12C42R1x.
    a. Manufacturers:
        1) Merchant & Evans Industries, Inc./Customform.

2) Ryerson Div. BASF/Color Klad.
3) Substitutions: Refer to Division 1.

b. Color and Gloss: As selected by Architect from manufacturer's full range of nonmetallic colors.
c. Touch-up Paint for Prefinished Sheet Metal: Type recommended by fluoropolymer manufacturer for field touch-up.

6. Accessories: Provide strainers, outlet tubes, screens, baffles, hangers and gutter ends as required for a complete system and complying with SMACNA Manual.
7. Provide heavier gage metal where recommended by SMACNA Manual for size of component.

D. Manufactured Reglets: Snap-on type, for two piece flashing; metal to match flashing and sheet metal.
1. Manufacturers:
a. Fry Reglet Corp./Springlok System.
b. W.P. Heckman Co./The Leading Edge Drive Lock System.
c. Substitutions: Refer to Division 1.

E. Steel Pipe Downspouts: Nominal 3” ASTM A53, Type S seamless, grade as selected by fabricator; minimum Schedule 40.

F. Solder and Fasteners: As recommended by SMACNA and complying with applicable codes and regulations; hot dipped galvanized minimum coating comparable to G90.

G. Concealed Sealant: Butyl type for use in conjunction with sheet metal; non-staining; non-corrosive; non-shrinking and non-sagging; ultra-violet and ozone resistant for exterior concealed applications.

H. Bituminous Paint: Acid and alkali resistant type; black color; asbestos free.

I. Plastic Cement: Cutback asphaltic type; asbestos free.

J. Sealing Compound: Type recommended by roofing manufacturer; asbestos free.

K. Gaskets: Type suitable for use in conjunction with sheet metal; non-staining, non-corrosive, non-shrinking, non-sagging, ultra-violet resistant, and ozone resistant; for exterior concealed applications.
1. Manufacturers:
a. Sandell Manufacturing Co./Polytite Joint Sealant.
b. Emseal USA, Inc./Emseal Secondary Seal.
c. Substitutions: Refer to Division 1.

2.2 FABRICATION

A. Fabricate sheet metal in accordance with SMACNA Architectural Sheet Metal Manual.

B. Form sections square, true and accurate to size, free from distortion and other defects detrimental to appearance or performance.

1. Fabricate corners and intersections in shop with solder joints; watertight fabrication.

C. Form sections in maximum 10'-0" lengths; make allowance for expansion at joints.

D. Hem exposed edges on underside 1/2".

E. Backpaint flashings with heavy bodied bituminous paint where in contact with cementitious materials or dissimilar metals.

PART 3 EXECUTION

3.1 INSTALLATION

A. Install metal flashing and sheet metal in accordance with SMACNA Architectural Sheet Metal Manual.
1. Install tight in place, with corners square, surfaces true and straight in planes, and lines accurate to profiles as indicated on Drawings.
2. Lap joints in direction of water flow.
3. Hold downspouts in position, clear of wall, by hangers spaced not more than 5'-0" on center; securely fasten hangers to wall without exposed damage to wall surface.

B. Exercise care when cutting materials on site, to ensure cuttings do not remain on finished surfaces.

C. Provide expansion joints concealed within system.

D. Use concealed fasteners, continuous cleat type, except where specifically approved by Architect.
1. Exposed fasteners may be used, where clearly indicated on shop drawings and approved by Architect, at areas not exposed at exterior walls nor in sight of interior spaces.

E. Apply sealing compound at junction of metal flashing and felt flashing.

F. Lock seams and end joints; fit flashing tight in place; make corners square, surfaces true and straight in planes, and lines accurate to profiles.

G. Counter-flash mechanical and electrical items projecting through roof membrane.

H. Install sealants where required to prevent direct weather penetration.
1. Install continuous gasket behind surface applied reglets.

I. Completed installation shall be free of rattles, noise due to thermal and air movement, and wind whistles.

3.2 CLEANING

A. Remove protective coating from shop finished sheet metal when no longer required to protect roofing and flashing from construction.

B. Touch-up scratched and damaged finish to match new; remove and replace sheet metal units that cannot be repaired to look identical to adjacent sheet metal when viewed from 15'-0" away.

END OF SECTION

THIS PAGE
WAS INTENTIONALLY
LEFT BLANK

SECTION 07613

MANUFACTURED SHEET METAL ROOFING

PART 1 GENERAL

1.1 SUMMARY

A. Section Includes:
1. Structural lapped seam metal roofing.
2. Underlayment.
3. Metal facias, flashings, and trim.
4. Metal gutters and downspouts.

1.2 REFERENCES

A. American Architectural Manufacturers Association:
1. AAMA 2603 - Voluntary Specification, Performance Requirements and Test Procedures for Pigmented Organic Coatings on Aluminum Extrusions and Panels.
2. AAMA 2604 - Voluntary specification, Performance Requirements and Test Procedures for High Performance Organic Coatings on Aluminum Extrusions and Panels.
3. AAMA 2605 - Voluntary Specification, Performance Requirements and Test Procedures for Superior Performing Organic Coatings on Aluminum Extrusions and Panels.

B. American Iron and Steel Institute:
1. AISI General - Standard for Cold-Formed Steel Framing - General Provisions.
2. AISI Header - Standard for Cold-Formed Steel Framing - Header Design.
3. AISI NASPEC - North American Specification for Design of Cold-Formed Steel Structural Members.

C. American Society of Civil Engineers:
1. ASCE 7 - Minimum Design Loads for Buildings and Other Structures.

D. ASTM International:
1. ASTM A653/A653M - Standard Specification for Steel Sheet, Zinc-Coated (Galvanized) or Zinc-Iron Alloy-Coated (Galvannealed) by the Hot-Dip Process.
2. ASTM A755/A755M - Standard Specification for Steel Sheet, Metallic Coated by the Hot-Dip Process and Prepainted by the Coil-Coating Process for Exterior Exposed Building Products.
3. ASTM B209 - Standard Specification for Aluminum and Aluminum-Alloy Sheet and Plate.
4. ASTM C1371[**-2004a**] - Standard Test Method for Determination of Emittance of Materials Near Room Temperature Using Portable Emissometers.
5. ASTM C1549[**-2004**] - Standard Test Method for Determination of Solar Reflectance Near Ambient Temperature Using a Portable Solar Reflectometer.
6. ASTM D226 - Standard Specification for Asphalt-Saturated Organic Felt Used in Roofing and Waterproofing.
7. ASTM D1970 - Standard Specification for Self-Adhering Polymer Modified Bituminous Sheet Materials Used as Steep Roofing Underlayment for Ice Dam Protection.
8. ASTM D2178 - Standard Specification for Asphalt Glass Felt Used in Roofing and Waterproofing.
9. ASTM D4397 - Standard Specification for Polyethylene Sheeting for Construction, Industrial, and Agricultural Applications.
10. ASTM D4586 - Standard Specification for Asphalt Roof Cement, Asbestos-Free.

11. ASTM E283 - Standard Test Method for Determining the Rate of Air Leakage Through Exterior Windows, Curtain Walls, and Doors Under Specified Pressure Differences Across the Specimen.
12. ASTM E331 - Standard Test Method for Water Penetration of Exterior Windows, Curtain Walls, and Doors by Uniform Static Air Pressure Difference.
13. ASTM E408[**-1971(1996)e1**] - Standard Test Methods for Total Normal Emittance of Surfaces Using Inspection-Meter Techniques.
14. ASTM E903[**-1996**] - Standard Test Method for Solar Absorptance, Reflectance, and Transmittance of Materials Using Integrating Spheres.
15. ASTM E1918[**-1997**] - Standard Test Method for Measuring Solar Reflectance of Horizontal and Low-Sloped Surfaces in the Field.
16. ASTM E1980[**-2001**] - Standard Practice for Calculating Solar Reflectance Index of Horizontal and Low-Sloped Opaque Surfaces.

E. Federal Specification Unit:
1. FS TT-C-494 - Coating Compound, Bituminous, Solvent Type, Acid Resistant.

F. National Roofing Contractors Association:
1. NRCA - The NRCA Roofing and Waterproofing Manual.

G. Sheet Metal and Air Conditioning Contractors:
1. SMACNA - Architectural Sheet Metal Manual.

H. Underwriters Laboratories Inc.:
1. UL 580 - Tests for Uplift Resistance of Roof Assemblies.

I. U.S. Environmental Protection Agency:
1. ENERGY STAR - ENERGY STAR Voluntary Labeling Program.

1.3 DESIGN REQUIREMENTS

A. Wind Uplift Resistance: UL 580; Class 90.

B. Seismic Loads: Design and size components to withstand seismic loads and sway displacement as calculated in accordance with applicable code.

C. Air Infiltration: Limit air leakage through roof assembly to 0.03 cfm/sq ft of wall area, measured at reference differential pressure across assembly of **6.24** psf when tested in accordance with ASTM E283.

D. Water Leakage: None, when measured in accordance with ASTM E331 with test pressure of 6.24 psf.

E. Gutter and Downspout Components: Conform to SMACNA Architectural Sheet Metal Manual for sizing components for rainfall intensity determined by storm occurrence of 1 in 10 years.

F. Exterior Components: Accommodate the following without damage to system, components or deterioration of seals.
1. Movement within system.
2. Movement between system and perimeter framing components.
3. Dynamic loading and release of loads.
4. Deflection of structural support framing.
5. Expansion and contraction from temperature range of 170 degrees F over 12 hour period.

1.4 QUALITY ASSURANCE

A. Calculate structural properties of framing members in accordance with AISI NASPEC.

B. Perform Work in accordance with SMACNA Architectural Sheet Metal Manual.

C. Perform Work in accordance with 2013 California Building Codes.

D. Maintain one copy of each document on site.

1.5 QUALIFICATIONS

A. Manufacturer: Company specializing in manufacturing Products specified in this section with minimum three years documented experience.

B. Installer: Company specializing in performing work of this section approved by manufacturer.

1.6 DELIVERY, STORAGE, AND HANDLING

A. Stack material to prevent twisting, bending, and abrasion, and to provide ventilation. Slope metal sheets to ensure drainage.

B. Prevent contact with materials causing discoloration or staining.

PART 2 PRODUCTS

2.1 MANUFACTURED SHEET METAL ROOFING

A. Structural Lapped Seam Metal Roofing: Factory formed metal roofing panel system with exposed fasteners.
   1. Panel Materials: Pre-finished steel sheet.
   2. Panel Profile: see drawings.
   3. Seam Type: Lapped.
   4. Color: As selected.

B. Roof Surface: Minimum solar reflectance index (SRI) of 78 for 75 percent of roof area, calculated in accordance with ASTM E1980.
   1. Reflectance: Measured in accordance with ASTM E903, ASTM E1918, or ASTM C1549.
   2. Emittance: Measured in accordance with ASTM E408 or ASTM C1371.

2.2 SHEET METAL MATERIALS

A. Pre-Finished Galvanized Steel Sheet: ASTM A755/A755M coil coated.
   1. Base Metal: ASTM A653/A653M; Structural Quality, Grade 50.
   2. Exposed Finish: Fluoropolymer coating with minimum 70 percent polyvinylidene fluoride resin.
   3. Unexposed Finish: Manufacturer’s standard coating.

2.3 ACCESSORIES

A. Fasteners: Same material and finish as roofing metal Type recommended by roofing manufacturer.

B. Protective Backing Paint: type recommended by building manufacturer.

C. Sealant: type, recommended by building manufacturer.

D. Plastic Cement: ASTM D4586, Type I.

E. Downspout: Steel.

2.4 FABRICATION

A. Form sections shape as indicated on Drawings, accurate in size, square, and free from distortion or defects.

B. Fabricate facia, trim, flashing, and other metal components from same material as metal roof panels. Provide exposed metal surfaces with same finish as exposed face of metal roof panels.

C. Fabricate cleats of same material as sheet, to interlock with sheet.

D. Fabricate starter strips of same material as sheet, continuous, to interlock with sheet.

E. Form pieces in single length sheets.

F. Hem exposed edges on underside 1/2 inch; miter and seam corners.

G. At moving joints, use sealed lapped, bayonet-type or interlocking hooked seams.

H. Fabricate corners from one piece with minimum 18 inch long legs; seam for rigidity, seal with sealant.

I. Fabricate vertical faces with bottom edge formed outward 1/4 inch and hemmed to form drip.

J. Fabricate gutters to profile and size to match existing building.

K. Fabricate downspouts to profile and size to match existing building.

L. Fabricate accessories in profile and size to suit gutters and downspouts.
   1. Anchorage Devices: In accordance with SMACNA.
   2. Gutter Supports: Straps.
   3. Downspout Supports: Straps.

PART 3 EXECUTION

3.1 INSTALLATION - FLASHING

A. Conform to SMACNA details.

B. Secure flashings in place using concealed fasteners. Use exposed fasteners only where permitted.

C. Secure flashing exposed edges with continuous cleats maximum 24 inches on center.

D. Apply plastic cement compound between metal flashings and felt flashings.

E. Fit flashings tight in place. Make corners square, surfaces true and straight in planes, and lines accurate to profiles.

F. Seal metal joints watertight.

3.2 INSTALLATION - GUTTERS AND DOWNSPOUTS

A. Conform to SMACNA details.

B. Secure gutters and downspouts in place using concealed fasteners.

C. Seal gutters watertight.

3.3 PROTECTION OF INSTALLED CONSTRUCTION

A. Do not permit traffic over unprotected roof surface.

END OF SECTION

THIS PAGE
WAS INTENTIONALLY
LEFT BLANK

SECTION 07950

EXPANSION JOINT COVER ASSEMBLIES

PART 1 GENERAL

1.1 SUMMARY

A. Section Includes: Provide shop fabricated elastomeric expansion joint cover assemblies, metal and elastomeric types as indicated, including anchors and accessories as required for complete installation.
   1. Provide weather-tight exterior joint cover assemblies, with metal retainers, including anchors and accessories as required for complete installation.
   2. Expansion joint cover assemblies include both expansion and compression assemblies as indicated on Drawings.

B. Related Work:
   1. Section 07600: FLASHING AND SHEET METAL.

1.2 ADMINISTRATIVE REQUIREMENTS

A. Pre-Installation Meeting: Convene not less than one week prior to commencing work of this Section. Require attendance of those directly affecting work of this Section.
   1. Review installation procedures and coordination required with related work.

1.3 SUBMITTALS

A. Product Data: Submit manufacturer's literature for each joint cover assembly.

B. Shop Drawings: Indicate method of connection to structure.

C. Samples: Submit samples of each type of exposed finish material.

D. Certificates: Submit manufacturer representative’s certification indicating exterior joint cover assemblies have been installed in accordance with manufacturer recommendations and instructions.

1.4 WARRANTY

A. Extended Correction Period: Provide for correcting failure of exterior expansion and compression joint cover assemblies to resist wind and to maintain weather-tight closure under anticipated movement and conditions.
   1. Period: Two years.

PART 2 PRODUCTS

2.1 SYSTEMS MANUFACTURERS

A. Johns Manville.

B. Balco Inc.

C. Construction Specialties, Inc. C-S Group.

D. MM Systems, Inc.

E. Michael Rizza Co., Inc.

F. Substitutions: Refer to Division 1.

2.2 MATERIALS

A. System Description: Provide shop fabricated elastomeric expansion joint cover assemblies, metal and elastomeric types as indicated, including anchors and accessories.
   1. Provide each type of joint cover assembly as a system from a single manufacturer; provide exterior wall and roof joint cover assemblies from a single manufacturer.
   2. Provide factory fabricated connection between exterior wall and roof joint covers.

B. Basis of Design:
   1. Exterior roof and wall expansion joint covers are based on Johns Manville roof and wall expansion joint covers CF/EJ- INS.
   2. Interior horizontal and vertical expansion joint covers Construction Specialties, Inc. C-S Group model SCC-1200

C. Aluminum: ASTM B221 alloy 6063-T5 for extrusions; ASTM B209, alloy 6061-T6, sheet and plate
   1. Metal Finishes:
      a. Aluminum Contact Surfaces on Concrete: Zinc chromate primer.
      b. Aluminum Covers: Clear anodic coating.
   2. Wearing Surfaces: Manufacturer's standard, of type shown on Drawings.
   3. Protection: Cover exposed metal surfaces with factory-applied adhesive paper or polyvinyl chloride (PVC) protective strippable coating.

D. Elastomeric Seals: Manufacturer's standard durometer consistent with joint size and application.
   1. Functional Seal: ASTM C509 closed cell neoprene as recommended by manufacturer for application indicated and as needed to assure weathertight exterior applications.
   2. Visual Seals: ASTM C864 dense silicone; color as selected by Architect from manufacturer's full range of available colors.
   3. Lubricants/Adhesives: Type as recommended by system manufacturer for specific material and application.
   4. Sealants at Elastomeric Seals: Type as recommended by seal manufacturer to maintain integrity of weather barrier.

E. Accessories: Manufacturer's standard anchors, fasteners, set screws, spacers, flexible seal and filler materials, adhesive and accessories compatible with material in contact.
   1. Exterior Anchors: Minimum Series 300 stainless steel.
   2. Elastomeric Seal Corner Angle Reinforcing: Minimum Series 304 stainless steel.

2.3 FABRICATION

A. General: Furnish basic profile and operating units for expansion joint covers as indicated on Drawings.
   1. Expansion and Compression Joint Cover Types: As indicated and as approved by Architect.

B. Shop Assembly: Assemble items in shop to minimize field splicing and assembly of units at Project site.

C. Furnish longest practicable lengths to minimize number of end joints.
   1. Seals: Continuous between intersections with joints mitered, reinforced with stainless steel angles, and sealed with joint sealer.
   2. Functional Seals: Continuous where possible.
   3. Intermediate Drains: Provide at exterior joint cover assemblies as required to allow water to drain to exterior.
   4. Interior Seals: Continuous between intersections with joints mitered. Reinforce joints with stainless steel angles.

D. Provide hairline mitered corners where joint changes direction or abuts other material systems.

E. Provide factory fabricated custom fit end closers at exposed ends of joint cover assemblies.

F. Provide separator coat between aluminum and dissimilar materials to prevent electrolysis and to protect aluminum.

PART 3 EXECUTION

3.1 EXAMINATION

A. Field Measurements: Take field measurements prior to preparation of shop drawings and fabrication, where possible.
   1. Allow for trimming and fitting wherever taking of field measurements before fabrication might delay work.
   2. Furnish setting drawings for installation of anchorages to be embedded in adjacent construction; coordinate delivery of such items to Project site so as to prevent delay of construction.

B. Examine areas and conditions under which expansion joint covers are to be installed.

C. Coordinate with adjacent systems to ensure acceptable conditions for installation of expansion joint cover assemblies.

D. Do not proceed with work until unsatisfactory conditions have been corrected, start of installation indicated acceptance of conditions.

3.2 INSTALLATION

A. Manufacturer's Instructions: Comply with manufacturer's instructions and recommendations, including preparation of substrate, applying materials and protection

of installed units.

B. Cutting, Fitting and Placement:
   1. Perform cutting, drilling and fitting required for installation.
   2. Set work accurately in location, alignment and elevation, plumb, level, true, measured from established lines and levels.
   3. Provide temporary bracing or anchors in formwork for items which are to be built into concrete, masonry or similar construction.
   4. Install joint cover assemblies in true alignment.
   5. Locate wall, ceiling, and soffit covers in continuous contact with adjacent surfaces; securely attach in place.
   6. Hold end joints to minimum; make end joints with strong, rigid, mechanical splice plate in true alignment, with hairline joints.

3.3 FIELD QUALITY CONTROL

A. Manufacturer’s Field Services: Manufacturer’s representative to visit site and provide written certification indicating exterior expansion joint covers have been installed in accordance with manufacturer recommendations and instructions.

3.4 CLEANING AND PROTECTION

A. Do not remove strippable protective material until finish work in adjacent areas is complete.

B. When protective material is removed, clean exposed metal surfaces in accordance with manufacturer's instructions.

END OF SECTION

SECTION 08114

STANDARD STEEL DOORS

PART 1 GENERAL

1.1 SUMMARY

A. Section includes non-rated, thermally insulated, steel doors.

B. Related Sections:
1. Section 08115 - Standard Steel Frames.
2. Section 08710 - Door Hardware.
3. Section 09900 - Paints and Coatings: Field painting of doors.

1.2 REFERENCES

A. American National Standards Institute:
1. ANSI A250.8 - Recommended Specifications for Standard Steel Doors and Frames.

B. ASTM International:
1. ASTM A653/A653M - Standard Specification for Steel Sheet, Zinc-Coated (Galvanized) or Zinc-Iron Alloy-Coated (Galvannealed) by the Hot-Dip Process.
2. ASTM C1363 - Standard Test Method for the Thermal Performance of Building Assemblies by Means of a Hot Box Apparatus.
3. ASTM E84 - Standard Test Method for Surface Burning Characteristics of Building Materials.
4. ASTM E413 - Classification for Rating Sound Insulation.

C. Hollow Metal Manufacturers Association:
1. HMMA 810 - Hollow Metal Doors.

D. National Fire Protection Association:
1. NFPA 80 - Standard for Fire Doors, Fire Windows.
2. NFPA 105 - Standard for the Installation of Smoke Door Assemblies and other Opening Protectives.
3. NFPA 252 - Standard Methods of Fire Tests of Door Assemblies.

E. Steel Door Institute:
1. SDI 108 - Recommended Selection and Usage Guide for Standard Steel Doors.

F. Underwriters Laboratories Inc.:
1. UL 10B - Fire Tests of Door Assemblies.
2. UL 10C - Positive Pressure Fire Tests of Door Assemblies.
3. UL 1784 - Air Leakage Tests of Door Assemblies.

1.3 SUBMITTALS

A. Section 01330 - Submittal Procedures: Requirements for submittals.

B. Shop Drawings: Indicate door elevations, internal reinforcement, closure method, and finishes.

C. Product Data: Submit door configurations, location of cut-outs for hardware reinforcement.

D. Manufacturer's Installation Instructions: Submit special installation instructions.

1.4 QUALITY ASSURANCE

A. Perform Work in accordance with ANSI A250.8.

B. Perform Work in accordance with 2013 California Building Code (CBC).

1.5 QUALIFICATIONS

A. Manufacturer: Company specializing in manufacturing Products specified in this section with minimum three years documented experience.

B. Installer: Company specializing in performing work of this section approved by manufacturer.

1.6 DELIVERY, STORAGE, AND HANDLING

A. Accept doors on site in manufacturer's packaging. Inspect for damage.

B. Break seal on site to permit ventilation.

1.7 COORDINATION

A. Coordinate Work with door opening construction, door frame, and door hardware installation.

PART 2 PRODUCTS

2.1 STANDARD STEEL DOORS

A. Product Description:
   1. Exterior and Interior Doors (Insulated): ANSI A250.8, 1-3/4 inch thick.
      a. Level 3 - Extra heavy Duty, Model 2, seamless design.

2.2 SUSTAINABILITY CHARACTERISTICS

A. Materials and Resources Characteristics:
   1. Recycled Content Materials: Furnish materials with maximum available recycled content.

2.3 COMPONENTS

A. Face: Steel sheet in accordance with ANSI A250.

B. End Closure: Channel, 0.04 inches thick, flush or inverted.

C. Core: vertical steel stiffeners.

D. Thermal Insulated Door: Total insulation R-Value per door schedule drawing A601, measured in accordance with ASTM C1363.

2.4 ACCESSORIES

A. Primer: ANSI A250.10 rust inhibitive type.

2.5 FABRICATION

A. Fabricate doors with hardware reinforcement welded in place.

2.6 SHOP FINISHING

A. Steel Sheet: Galvanized to ASTM A653/A653M A60.

B. Primer: Baked.

C. Shop Finish: Thermosetting epoxy of color.

PART 3 EXECUTION

3.1 EXAMINATION

A. Verify opening sizes and tolerances are acceptable.

3.2 INSTALLATION

A. Install doors in accordance with ANSI A250.8.

B. Install louvers, plumb and level.

C. Coordinate installation of doors with installation of frames specified in Section 08115 and hardware specified in Section 08710.

D. Touch-up damaged shop finishes.

3.3 ERECTION TOLERANCES

A. Maximum Diagonal Distortion: 1/16 inch measured with straight edge, corner to corner.

3.4 ADJUSTING

A. Adjust door for smooth and balanced door movement.

END OF SECTION

THIS PAGE
WAS INTENTIONALLY
LEFT BLANK

SECTION 08115

STANDARD STEEL FRAMES

PART 1 GENERAL

1.1 SUMMARY

A. Section includes non-rated thermally insulated steel frames.

B. Related Sections:
1. Section 08114 - Standard Steel Doors.
2. Section 08710 - Door Hardware: Hardware, silencers, and weatherstripping.

1.2 REFERENCES

A. American National Standards Institute:
1. ANSI A250.8 - Recommended Specifications for Standard Steel Doors and Frames.

B. ASTM International:
1. ASTM A653/A653M - Standard Specification for Steel Sheet, Zinc-Coated (Galvanized) or Zinc-Iron Alloy-Coated (Galvannealed) by the Hot-Dip Process.

C. National Fire Protection Association:
1. NFPA 80 - Standard for Fire Doors, Fire Windows.
2. NFPA 105 - Standard for the Installation of Smoke Door Assemblies and other Opening Protectives.
3. NFPA 252 - Standard Methods of Fire Tests of Door Assemblies.

D. Underwriters Laboratories Inc.:
1. UL 10B - Fire Tests of Door Assemblies.
2. UL 10C - Positive Pressure Fire Tests of Door Assemblies.
3. UL 1784 - Air Leakage Tests of Door Assemblies.

1.3 SUBMITTALS

A. Section 01330 - Submittal Procedures: Submittal procedures.

B. Shop Drawings: Indicate frame elevations, reinforcement, anchor types and spacing, location of cut-outs for hardware, and finish.

C. Product Data: Submit frame configuration and finishes.

D. Manufacturer's Installation Instructions: Submit special installation instructions.

1.4 QUALITY ASSURANCE

A. Conform to requirements of ANSI A250.8.

B. Perform Work in accordance with 2013 California Building Code (CBC).

1.5 QUALIFICATIONS

A. Manufacturer: Company specializing in manufacturing products specified in this section with minimum three years documented experience.

1.6 DELIVERY, STORAGE, AND HANDLING

A. Accept frames on site in manufacturer's packaging. Inspect for damage.

B. Break seal on-site to permit ventilation.

1.7 COORDINATION

A. Coordinate Work with frame opening construction, door, and hardware installation.

PART 2 PRODUCTS

2.1 STANDARD STEEL FRAMES

A. Product Description: Standard shop fabricated steel frames, non-rated types.
   1. Frames: To suit ANSI A250.8 Grade and Model of door specified in Section 08114.

2.2 SUSTAINABILITY CHARACTERISTICS

A. Materials and Resources Characteristics:
   1. Recycled Content Materials: Furnish materials with maximum available recycled content.

2.3 ACCESSORIES

A. Louvers: coordinate with Mechanical Specifications and Drawings.
   1. Louver L3: see Louver Schedule drawing M501.

B. Bituminous Coating: Non-asbestos fibered asphalt emulsion.

C. Primer: ANSI A250.10 rust inhibitive type.

D. Silencers: Resilient rubber fitted into drilled hole.

E. Weatherstripping: Resilient rubber set in steel retainer.

2.4 FABRICATION

A. Fabricate frames as welded unit.

B. Fabricate frames with hardware reinforcement plates welded in place.

C. Reinforce frames wider than 48 inches with roll formed steel channels fitted tightly into frame head, flush with top.

D. Prepare frames for silencers. Provide three single silencers for single doors on strike side.

2.5 SHOP FINISHING

A. Steel Sheet: Galvanized to ASTM A653/A653M A60.

B. Primer: Baked.

C. Factory Finish: Thermosetting epoxy of color.

D. Coat inside of frame profile with bituminous coating to minimum thickness of 1/16 inch.

PART 3 EXECUTION

3.1 EXAMINATION

A. Verify opening sizes and tolerances are acceptable.

3.2 INSTALLATION

A. Install frames in accordance with ANSI A250.8.

B. Coordinate with wall construction for anchor placement.

C. Coordinate installation of frames with installation of hardware specified in Section 08710 and doors in Section 08114.

3.3 ERECTION TOLERANCES

A. Maximum Diagonal Distortion: 1/16 inch measured with straight edges, crossed corner to corner.

END OF SECTION

THIS PAGE
WAS INTENTIONALLY
LEFT BLANK

SECTION 08710

DOOR HARDWARE

PART 1 GENERAL

1.1 SUMMARY

A. Section includes hardware for steel doors.
   1. Provide door gaskets, including weatherstripping and seals, and thresholds.

B. Related Sections:
   1. Section 08114 - Standard Steel Doors.
   2. Section 08115 - Standard Steel Frames: Silencers integral with steel frames.

1.2 REFERENCES

A. American National Standards Institute:
   1. ANSI A156.1 - Butts and Hinges.
   2. ANSI A156.2 - Bored and Preassembled Locks and Latches.
   3. ANSI A156.3 - Exit Devices.
   4. ANSI A156.4 - Door Controls - Closures.
   5. ANSI A156.5 - Auxiliary Locks and Associated Products.
   6. ANSI A156.6 - Architectural Door Trim.
   7. ANSI A156.7 - Template Hinge Dimensions.
   8. ANSI A156.8 - Door Controls - Overhead Holders.
   9. ANSI A156.12 - Interconnected Locks and Latches.
   10. ANSI A156.13 - Mortise Locks and Latches.
   11. ANSI A156.14 - Sliding and Folding Door Hardware.
   12. ANSI A156.15 - Closer Holder Release Devices.
   13. ANSI A156.16 - Auxiliary Hardware.
   14. ANSI A156.18 - Materials and Finishes
   15. ANSI A156.19 - Power Assist and Low Energy Power Operated Doors.
   16. ANSI A156.23 - Electromagnetic Locks.
   17. ANSI A156.24 - Delayed Egress Locks.
   18. ANSI A156 - Complete Set of 24 BHMA Standards (A156 Series) with Binder.

B. Builders Hardware Manufacturers Association:
   1. BHMA Directory of Certified Products.

C. National Fire Protection Association:
   1. NFPA 80 - Standard for Fire Doors, Fire Windows.
   2. NFPA 252 - Standard Methods of Fire Tests of Door Assemblies.

D. Underwriters Laboratories Inc.:
   1. UL 10B - Fire Tests of Door Assemblies.
   2. UL 305 - Panic Hardware.
   3. UL - Building Materials Directory.

E. Intertek Testing Services (Warnock Hersey Listed):
   1. WH - Certification Listings.

1.3 SUBMITTALS

A. Section 01330 - Submittal Procedures: Submittal procedures.

B. Shop Drawings:
   1. Indicate locations and mounting heights of each type of hardware, schedules, catalog cuts.
   2. Submit manufacturer's parts lists, and templates.

C. Manufacturer's Installation Instructions: Submit special procedures, and perimeter conditions requiring special attention.

1.4 CLOSEOUT SUBMITTALS

A. Project Record Documents: Record actual locations of installed cylinders and their master key code.

B. Operation and Maintenance Data: Submit data on operating hardware, lubrication requirements, and inspection procedures related to preventative maintenance.

C. Keys: Deliver with identifying tags to Owner by security shipment direct from hardware supplier.

1.5 QUALITY ASSURANCE

A. Perform Work in accordance with the following requirements:
   1. ANSI A156 series.
   2. UL 305.

B. Furnish hardware marked and listed in BHMA Directory of Certified Products.

C. Perform Work in accordance with 2013 California Building Code (CBC).

1.6 QUALIFICATIONS

A. Manufacturer: Company specializing in manufacturing products specified in this section with minimum three years documented experience.

B. Hardware Supplier: Company specializing in supplying commercial door hardware with minimum three years documented experience.

C. Hardware Supplier Personnel: Employ qualified person to assist in work of this section.

1.7 DELIVERY, STORAGE, AND HANDLING

A. Package hardware items individually with necessary fasteners, instructions, and installation templates, when necessary; label and identify each package with door opening code to match hardware schedule.

1.8 COORDINATION

A. Coordinate Work with other directly affected sections involving manufacture or fabrication of internal reinforcement for door hardware and recessed items.
   1. Provide templates or actual hardware as required to ensure proper preparation of doors and frames.

B. Coordinate Owner's keying requirements during course of Work.

1.9 WARRANTY

A. Furnish five year manufacturer warranty for locksets and door closers.

1.10 MAINTENANCE MATERIALS

A. Furnish special wrenches and tools applicable for each different and for each special hardware component.

PART 2 PRODUCTS

2.1 SUSTAINABILITY CHARACTERISTICS

A. Materials and Resources Characteristics:
   1. Recycled Content Materials: Furnish materials with maximum available recycled content.

2.2 COMPONENTS

A. General Hardware Requirements: Where not specifically indicated, comply with applicable ANSI A156 standard for type of hardware required. Furnish each type of hardware with accessories as required for applications indicated and for complete, finished, operational doors.
   1. Templates: Furnish templates or physical hardware items to door and frame manufacturers sufficiently in advance to avoid delay in Work.
   2. Reinforcing Units: Furnished by door and frame manufacturers; coordinated by hardware supplier or hardware manufacturer.
   3. Fasteners: Furnish as recommended by hardware manufacturer and as required to secure hardware.
      a. Finish: Match hardware item being fastened.

B. Hinges: ANSI A156.1, full mortise type complying with following general requirements unless otherwise scheduled.
   1. Widths: Sufficient to clear trim projection when door swings 180 degrees.
   2. Number: Furnish minimum three hinges to 90 inches high, four hinges to 120 inches high for each door leaf.
   3. Size and Weight: 4-1/2 inch heavy weight typical for 1-3/4 inch doors.
      a. Doors Over 40 inches Wide: Extra heavy weight ball or oilite bearing hinges.
      b. Doors Over 48 inches Wide: 5 inch extra heavy weight ball or oilite bearing.
   4. Pins: Furnish nonferrous hinges with non-removable pins (NRP) at exterior and locked outswinging doors.
   5. Tips: Flush tips.

C. Latch Sets: Typical 2-3/4 inch backset. Furnish standard strikes with extended lips to protect trim from being marred by latch bolt verify type of cutouts provided in metal frames.
   1. Bored (Cylindrical) Latch Sets: ANSI A156.2, Series 4000, Grade 1 unless otherwise indicated.

D. Cylinders: ANSI A156.5, Grade 1, pin type. Match existing building cylinders.
   1. Keying: Keyed as directed by Owner.
   2. Keys: Nickel silver. Stamp keys with “DO NOT DUPLICATE”.

E. Closers: ANSI A156.4 modern type with cover, surface mounted closers; full rack and pinion type with steel spring and non-freezing hydraulic fluid.
   1. Adjustability: Furnish controls for regulating closing, latching, speeds, and back checking.
   2. Arms: Type to suit individual condition; parallel-arm closers at reverse bevel doors and where doors swing full 180 degrees.
   3. Location: Mount closers on inside of exterior doors, room side of interior doors typical; mount on pull side of other doors.
   4. Operating Pressure: Maximum operating pressure as follows.
      a. Interior Doors: Maximum 5 pounds.
      b. Exterior Doors: Maximum 8.5 pound.

F. Thresholds, and Trim: Furnish as indicated in Schedule, with accessories as required for complete operational door installations.
   1. Weatherstripping: Furnish continuous weatherstripping at top and sides of exterior doors.
   2. Thresholds: Maximum 1/2 inch height.
   3. Wall Stops: ANSI A156.1, Grade 1, convex pad wall stop with no visible screws.
   4. Floor Stops: ANSI A156.1 Grade 1 standard floor type with no visible screws; furnish with accessories as required for applications indicated.

2.3 ACCESSORIES

A. Lock Trim: Furnish levers with as indicated in Schedule as selected from manufacturer's full range of levers and roses.

2.4 FINISHING

A. Finishes: ANSI A156.18; furnish following finishes except where otherwise indicated in Schedule at end of section.
   1. Hinges:
      a. BHMA 630 and 626, satin finish.
   2. Typical Exterior Exposed and High Use Interior Door Hardware:
      a. BHMA 630, satin finished stainless steel.
   3. Typical Interior Door Hardware:
      a. BHMA 630, satin finished stainless steel.
   4. Closers: Finish appearance to match door hardware on same face of door.
      a. BHMA 628, satin aluminum, clear anodized.
      b. BHMA 600, primed for painting.
   5. Thresholds: Finish appearance to match door hardware on exterior face of door.
      a. BHMA 630, satin finished stainless steel.
   6. Other Items: Furnish manufacturer's standard finishes to match similar hardware types on same door, and maintain acceptable finish considering anticipated use and BHMA category of finish.

PART 3 EXECUTION

3.1 EXAMINATION

A. Verify doors and frames are ready to receive door hardware and dimensions are as indicated on shop drawings.

3.2 INSTALLATION

A. Coordinate mounting heights with door and frame manufacturers. Use templates provided by hardware item manufacturer.

B. Mounting Heights From Finished Floor to Center Line of Hardware Item: Comply with manufacturer recommendations and applicable codes where not otherwise indicated.
   1. Locksets: 38 inch.
   2. Push Pad Type Exit Devices: 42 inch.
   3. Cross Bar Type Exit Devices: 38 inch.
   4. Top Hinge: Jamb manufacturer's standard, but not greater than 10 inches from head of frame to center line of hinge.
   5. Bottom Hinge: Jamb manufacturer's standard, but not greater than 12-1/2 inches from floor to center line of hinge.
   6. Intermediate Hinges: Equally spaced between top and bottom hinges and from each other.
   7. Hinge Mortise on Door Leaf: 1/4 inch. to 5/16 inch from stop side of door.

3.3 FIELD QUALITY CONTROL

A. Architectural Hardware Consultant inspect installation and certify hardware and installation has been furnished and installed in accordance with manufacturer's instructions and as specified.

3.4 ADJUSTING

A. Adjust hardware for smooth operation.

3.5 PROTECTION OF INSTALLED CONSTRUCTION

A. Do not permit adjacent work to damage hardware or hardware finish.

3.6 SCHEDULES

A. The following hardware sets are intended to establish type and standard of quality when used together with this section requirements. Examine Drawings and Specifications and furnish proper hardware for door openings.

Hardware Set 1: (HW1) Exterior Double Doors	
Hinges:	Full mortise hinges as specified.
Lock:	Bored lock, Entrance Function.
Closer:	Surface mounted as specified.
Weatherstripping:	As specified.
Floor Stop:	Dome type as specified.
Threshold	As specified.

END OF SECTION

THIS PAGE
WAS INTENTIONALLY
LEFT BLANK

SECTION 09260

GYPSUM BOARD ASSEMBLIES

PART 1 GENERAL

1.1 SUMMARY

A. Section Includes:
1. Metal stud wall framing.
2. Metal channel ceiling framing.
3. Gypsum board and joint treatment.
4. Textured finishes.

1.2 REFERENCE STANDARDS

A. ASTM International:
1. ASTM C475/C475M - Standard Specification for Joint Compound and Joint Tape for Finishing Gypsum Board.
2. ASTM C514 - Standard Specification for Nails for the Application of Gypsum Board.
3. ASTM C557 - Standard Specification for Adhesives for Fastening Gypsum Wallboard to Wood Framing.
4. ASTM C645 - Standard Specification for Nonstructural Steel Framing Members.
5. ASTM C665 - Standard Specification for Mineral-Fiber Blanket Thermal Insulation for Light Frame Construction and Manufactured Housing.
6. ASTM C754 - Standard Specification for Installation of Steel Framing Members to Receive Screw-Attached Gypsum Panel Products.
7. ASTM C840 - Standard Specification for Application and Finishing of Gypsum Board.
8. ASTM C954 - Standard Specification for Steel Drill Screws for the Application of Gypsum Panel Products or Metal Plaster Bases to Steel Studs from 0.033 in. (0.84 mm) to 0.112 in. (2.84 mm) in Thickness.
9. ASTM C1002 - Standard Specification for Steel Drill Screws for the Application of Gypsum Panel Products or Metal Plaster Bases.
10. ASTM C1007 - Standard Specification for Installation of Load Bearing (Transverse and Axial) Steel Studs and Related Accessories.
11. ASTM C1178/C1178M - Standard Specification for Coated Glass Mat Water-Resistant Gypsum Backing Panel.
12. ASTM C1280 - Standard Specification for Application of Gypsum Sheathing.
13. ASTM C1288 - Standard Specification for Discrete Non-Asbestos Fiber-Cement Interior Substrate Sheets.
14. ASTM C1325 - Standard Specification for Non-Asbestos Fiber-Mat Reinforced Cement Substrate Sheets.
15. ASTM C1396/C1396M - Standard Specification for Gypsum Board.
16. ASTM E84 - Standard Test Method for Surface Burning Characteristics of Building Materials.
17. ASTM E90 - Standard Test Method for Laboratory Measurement of Airborne Sound Transmission Loss of Building Partitions and Elements.
18. ASTM E119 - Standard Test Methods for Fire Tests of Building Construction and Materials.
19. ASTM F1667 - Standard Specification for Driven Fasteners: Nails, Spikes, and Staples.

B. American Society of Civil Engineers:
1. ASCE 7 - Minimum Design Loads for Buildings and Other Structures.

C. California Department of Health Services:

1. CA/DHS/EHLB/R-174 - Standard Practice for the Testing of Volatile Organic Emissions from Various Sources Using Small-Scale Environmental Chambers, including 2004 Addenda.

D. Gypsum Association:
   1. GA 214 - Recommended Levels of Gypsum Board Finish.
   2. GA 216 - Application and Finishing of Gypsum Board.
   3. GA 600 - Fire Resistance Design Manual Sound Control.

E. Intertek Testing Services (Warnock Hersey Listed):
   1. WH - Certification Listings.

F. National Fire Protection Association:
   1. NFPA 265 - Standard Methods of Fire Tests for Evaluating Room Fire Growth Contribution of Textile Coverings on Full Height Panels and Walls, Method B.
   2. NFPA 286 - Standard Methods of Fire Tests for Evaluating Room Fire Growth Contribution of Wall and Ceiling Interior Finish.

G. Bay Area Air Quality Management District:
   1. BAAQMD, Reg 8, Rule 51 - Adhesive and Sealant Products.

H. Underwriters Laboratories Inc.:
   1. UL - Fire Resistance Directory.

1.3 SUBMITTALS

A. Section 01330 - Submittal Procedures: Requirements for submittals.

B. Product Data: Submit data on metal framing, gypsum board, joint tape.

C. Shop Drawings:
   1. Indicate installation details required for seismic design loads.

1.4 QUALITY ASSURANCE

A. Perform Work in accordance with ASTM C840.

B. Fire Rated Wall Construction: Rating as indicated on Drawings in conjunction with Section.
   1. Tested Rating: Determined in accordance with ASTM E119.

C. Perform Work in accordance with 2013 California Building Codes.

D. Maintain one copy of each document on site.

PART 2 PRODUCTS

2.1 GYPSUM BOARD ASSEMBLIES

A. Performance / Design Criteria:
   1. Select stud thickness to resist minimum 5 psf uniform load and maximum 1/240 deflection.
   2. Acoustic Attenuation for Identified Interior Partitions: STC in accordance with ASTM E90.

3. Seismic Loads: Design and size components to withstand seismic loads and sway displacement as calculated according to ASCE 7 and applicable codes for Seismic Design Category D.

2.2 SUSTAINABILITY CHARACTERISTICS

A. Materials and Resources Characteristics:
   1. Recycled Content Materials: Furnish materials with maximum available recycled content.
   2. Regional Materials: Furnish materials extracted, processed, and manufactured within 500 miles of Project site.

B. Indoor Environmental Quality Characteristics:
   1. Interior Adhesives: Maximum volatile organic compound content in accordance with BAAQMD Reg 8, Rule 51.
   2. Interior Sealants and Sealant Primers: Maximum volatile organic compound content in accordance with BAAQMD Reg 8, Rule 51.

2.3 COMPONENTS

A. Framing Materials:
   1. Studs and Tracks: ASTM C645;; galvanized sheet steel, 0.036 inch thick, C shape.
   2. Furring, Framing, and Accessories: ASTM C645. GA-216 and GA-600.
   3. Fasteners: ASTM C1002; length to suit application.
   4. Anchorage to Substrate: Tie wire, nails, screws, and other metal supports, of type and size to suit application; to rigidly secure materials in place.
   5. Seismic Bracing: As required for seismic performance requirements.
   6. Adhesive: GA-216.

B. Gypsum Board Materials: ASTM C1396/C1396M ; Type X fire resistant where indicated on Drawings.
   1. Standard Gypsum Board: maximum available length in place; ends square cut, square edges.
   2. Moisture Resistant Gypsum Board: maximum available length in place; ends square cut, square edges.

2.4 ACCESSORIES

A. Insulation: 07210 Thermal Insulation.

B. Gypsum Board Accessories: ASTM C1047; metal; corner beads, edge trim, and expansion joints.
   1. Metal Accessories: Galvanized steel.

C. Joint Materials: ASTM C475/C475M; reinforcing tape, joint compound, and water.

D. Gypsum Board Screws: ASTM C954; length to suit application.
   1. Screws for Steel Framing: Type S.

PART 3 EXECUTION

3.1 EXAMINATION

A. Verify site conditions are ready to receive work and opening dimensions are as indicated on shop drawings.

3.2 DEMOLITION

3.3 INSTALLATION

A. Metal Stud Installation:
   1. Install studs in accordance with ASTM C754.
   2. Extending stud framing to structure above. Maintain clearance under structural building members to avoid deflection transfer to studs.
   3. Blocking: Bolt or screw steel channels to studs.

B. Acoustic Accessories Installation:
   1. Place insulation in partitions tight within spaces, around cut openings, behind and around electrical and mechanical items within or behind partitions, and tight to items passing through partitions.

C. Gypsum Board Installation:
   1. Install gypsum board in accordance with ASTM C840.
   2. Use screws when fastening gypsum board to metal furring or framing.
   3. Treat cut edges and holes in moisture resistant gypsum board with sealant.
   4. Place control joints consistent with lines of building spaces
   5. Place corner beads at external corners Use longest practical length. Place edge trim where gypsum board abuts dissimilar materials.

D. Joint Treatment:
   1. Finish in accordance with GA-214 Level 3.

3.4 TOLERANCES

A. Maximum Variation of Finished Gypsum Board Surface from Flat Surface: 1/8 inch in 10 feet.

END OF SECTION

SECTION 09900

PAINTING AND COATING

PART 1 GENERAL

1.1 SUMMARY

A. Section includes surface preparation and field application of paints, and other coatings for building addition.

1.2 REFERENCES

A. ASTM International:
   1. ASTM D16 - Standard Terminology for Paint, Related Coatings, Materials, and Applications.
   2. ASTM D4442 - Standard Test Methods for Direct Moisture Content Measurement of Wood and Wood-Base Materials.
   3. ASTM E84 - Standard Test Method for Surface Burning Characteristics of Building Materials.

B. California Department of Health Services:
   1. CA/DHS/EHLB/R-174 - Standard Practice for the Testing of Volatile Organic Emissions from Various Sources Using Small-Scale Environmental Chambers, including 2004 Addenda.

C. Green Seal:
   1. GC-03- Anti-Corrosive Paints.
   2. GS-11 - Product Specific Environmental Requirements.

D. Painting and Decorating Contractors of America:
   1. PDCA - Architectural Painting Specification Manual.

E. Bay Area Air Quality Management District:
   1. BAAQMD, Reg 8, Rule3 - Architectural Coatings.

F. SSPC: The Society for Protective Coatings:
   1. SSPC - Steel Structures Painting Manual.

1.3 DEFINITIONS

A. Conform to ASTM D16 for interpretation of terms used in this section.

1.4 SUBMITTALS

A. Section 01330 - Submittal Procedures: Submittal procedures.

B. Product Data: Submit data on finishing products.

C. Manufacturer's Installation Instructions: Submit special surface preparation procedures, substrate conditions requiring special attention.

1.5 SUSTAINABLE DESIGN SUBMITTALS

A. Manufacturer's Certificate: Certify products meet or exceed specified sustainable design requirements.
   1. Indoor Air Quality Certificates:
      a. Certify volatile organic compound content for each interior paint and coating.
      b. Certify volatile organic compound content for each flooring system.
      c. Certify volatile organic compound content for each ceiling and wall system.

1.6 CLOSEOUT SUBMITTALS

A. Operation and Maintenance Data: Submit data on cleaning, touch-up, and repair of painted and coated surfaces.

1.7 QUALITY ASSURANCE

A. Surface Burning Characteristics:
   1. Fire Retardant Finishes: Maximum 25/450 flame spread/smoke developed index when tested in accordance with ASTM E84.

1.8 QUALIFICATIONS

A. Manufacturer: Company specializing in manufacturing products specified in this section with minimum three years documented experience.

B. Applicator: Company specializing in performing work of this section with minimum 5 years documented experience approved by manufacturer.

1.9 DELIVERY, STORAGE, AND HANDLING

A. Deliver products to site in sealed and labeled containers; inspect to verify acceptability.

B. Container Label: Include manufacturer's name, type of paint, brand name, lot number, brand code, coverage, surface preparation, drying time, cleanup requirements, color designation, and instructions for mixing and reducing.

C. Paint Materials: Store at minimum ambient temperature of 45 degrees F and maximum of 90 degrees F, in ventilated area, and as required by manufacturer's instructions.

1.10 ENVIRONMENTAL REQUIREMENTS

A. Do not apply materials when surface and ambient temperatures are outside temperature ranges required by paint product manufacturer.

B. Do not apply exterior coatings during rain or snow when relative humidity is outside humidity ranges, or moisture content of surfaces exceed those required by paint product manufacturer.

C. Minimum Application Temperatures for Latex Paints: 45 degrees F for interiors; 50 degrees F for exterior; unless required otherwise by manufacturer's instructions.

D. Provide lighting level of 80 ft candle measured mid-height at substrate surface.

1.11 EXTRA MATERIALS

A. Supply 1 gallons of each color, type, and surface texture; store where directed.

B. Label each container with color, type, texture, room locations, and in addition to manufacturer's label.

PART 2 PRODUCTS

2.1 SUSTAINABILITY CHARACTERISTICS

A. Materials and Resources Characteristics:
   1. Recycled Content Materials: Furnish materials with maximum available recycled content.

B. Indoor Environmental Quality Characteristics:
   1. Interior Flat and Non-Flat Paints: Maximum volatile organic compound content in accordance with GS-11.
   2. Interior Anti-Corrosive Paints: Maximum volatile organic compound content in accordance with GC-03.
   3. Interior Concrete Floor Finishes: Maximum volatile organic compound content in accordance with BAAQMD, Reg 8, Rule 3, including sealers and stains.

2.2 COMPONENTS

A. Coatings: Ready mixed, except field catalyzed coatings. Prepare coatings:
   1. To soft paste consistency, capable of being readily and uniformly dispersed to homogeneous coating.
   2. For good flow and brushing properties.
   3. Capable of drying or curing free of streaks or sags.

B. Accessory Materials: Linseed oil, shellac, turpentine, paint thinners and other materials not specifically indicated but required to achieve finishes specified; commercial quality.

C. Patching Materials: Latex filler.

D. Fastener Head Cover Materials: Latex filler.

PART 3 EXECUTION

3.1 EXAMINATION

A. Verify surfaces are ready to receive Work as instructed by product manufacturer.

B. Examine surfaces scheduled to be finished prior to commencement of work. Report conditions capable of affecting proper application.

C. Test shop applied primer for compatibility with subsequent cover materials.

D. Measure moisture content of surfaces using electronic moisture meter. Do not apply finishes unless moisture content of surfaces are below the following maximums:
   1. Gypsum Wallboard: 12 percent.
   2. Concrete Floors: 8 percent.

3.2 PREPARATION

A. Surface Appurtenances: Remove or mask electrical plates, hardware, light fixture trim, escutcheons, and fittings prior to preparing surfaces or finishing.

B. Surfaces: Correct defects and clean surfaces capable of affecting work of this section.

C. Marks: Seal with shellac those which may bleed through surface finishes.

D. Impervious Surfaces: Remove mildew by scrubbing with solution of tetra-sodium or tri-sodium phosphate and bleach. Rinse with clean water and allow surface to dry.

E. Aluminum Surfaces Scheduled for Paint Finish: Remove surface contamination by steam or high pressure water. Remove oxidation with acid etch and solvent washing. Apply etching primer immediately following cleaning.

F. Insulated Coverings: Remove dirt, grease, and oil from canvas and cotton.

G. Concrete Floors: Remove contamination, acid etch, and rinse floors with clear water. Verify required acid-alkali balance is achieved. Allow to dry.

H. Gypsum Board Surfaces: Fill minor defects with filler compound. Spot prime defects after repair.

I. Galvanized Surfaces: Remove surface contamination and oils and wash with solvent. Apply coat of etching primer.

J. Uncoated Steel and Iron Surfaces: Remove grease, mill scale, weld splatter, dirt, and rust. Where heavy coatings of scale are evident, remove by hand wire brushing or sandblasting; clean by washing with solvent. Apply treatment of phosphoric acid solution, ensuring weld joints, bolts, and nuts are similarly cleaned. Spot prime paint after repairs.

K. Shop Primed Steel Surfaces: Sand and scrape to remove loose primer and rust. Feather edges to make touch-up patches inconspicuous. Clean surfaces with solvent. Prime bare steel surfaces. Interior Wood Items Scheduled to Receive Paint Finish: Wipe off dust and grit prior to priming. Seal knots, pitch streaks, and sappy sections with sealer. Fill nail holes and cracks after primer has dried; sand between coats.

L. Metal Doors Scheduled for Painting: Prime metal door top and bottom edge surfaces.

3.3 EXISTING WORK

A. Extend existing paint and coatings installations using materials and methods compatible with existing installations and as specified.

3.4 APPLICATION

A. Do not apply finishes to surfaces that are not dry. Allow applied coats to dry before next coat is applied.

B. Apply each coat to uniform appearance. Apply each coat of paint slightly darker than preceding coat unless specified otherwise.

C. Sand metal surfaces lightly between coats to achieve required finish.

D. Vacuum clean surfaces of loose particles. Use tack cloth to remove dust and particles just prior to applying next coat.

3.5 FIELD QUALITY CONTROL

A. Inspect and test questionable coated areas.

3.6 CLEANING

A. Collect waste material which may constitute fire hazard, place in closed metal containers, and remove daily from site.

3.7 SCHEDULE - INTERIOR SURFACES

A. Steel - Unprimed:
   1. One coat of latex primer.
   2. Two coats of latex enamel, semi-gloss.

B. Steel - Primed:
   1. Touch-up with latex primer.
   2. Two coats of latex enamel, semi-gloss.

C. Steel - Galvanized:
   1. One coat galvanize primer.
   2. Two coats of latex enamel, semi-gloss.

D. Concrete Floors:
   1. One coat of catalyzed epoxy primer.
   2. Two coats of catalyzed epoxy enamel,

END OF SECTION

THIS PAGE
WAS INTENTIONALLY
LEFT BLANK

SECTION 09910

PAINTING AND COATING FOR WATER UTILITIES

PART 1 GENERAL

1.1 DESCRIPTION

A. This section includes materials and field application of painting and coating systems for exposed surfaces.

1.2 REFERENCE STANDARDS

A. The publications listed below form part of this specification to the extent referenced and are referred to in the text by the basic designation only. Reference shall be made to the latest edition of said standards unless otherwise called for.

AWWA C 210	Liquid-Epoxy Coating Systems for the Interior and Exterior of Steel Water Pipelines
AWWA C 218	Liquid Coating Systems for the Exterior of Aboveground Steel Water Pipelines and Fittings

1.3 RELATED SECTIONS

A. Section 02071 – Water Mains & Services

B. Section 15100 – Water Utility Fittings and Appurtenances

1.4 RESTRICTION ON CONTACT WITH POTABLE WATER

A. Under no circumstances shall paint materials specified in this Section be used where they may come in contact with the public water supply or for buried installations. These products are intended for exposed exterior use only.

1.5 QUALITY CONTROL

A. Notify the City 48 hours in advance of field operations involving surface preparation and coating application.

B. The City will inspect shop-and field-prepared surfaces. The Contractor shall not proceed with paint application until the surface preparation has been approved by the City. The City will inspect application of all prime, intermediate, finish, and touch-up coatings to verify the integrity of the coating and compliance with the specifications. Each coating application will be checked and deficiencies marked. Items exhibiting an improper finish or color, or insufficient surface preparation or dry film thickness shall be prepared as necessary and corrected, utilizing the specified paint materials to obtain compliance.

1.6 SURFACES NOT TO BE FIELD PAINTED

A. Generally, the following items or materials are not to be field painted unless specifically required elsewhere in the specifications:

1. Stainless steel.
2. Interior surfaces of valves, fittings and pipe.
3. Nameplates.
4. Grease fittings.
5. Brass, copper, bronze, or galvanized items except as required for recycled water system identification.
6. Buried pipe and appurtenances except as required in the piping specifications.

1.7 COLOR AND PAINT SYSTEM SCHEDULE

The following tables designate the color and paint system that shall be used on the City's various potable water facilities.

Potable Water:

ITEM	COLOR	PAINT SYSTEM
Fire Hydrant	White	Acrylic or Epoxy/Urethane
Blow Off Box Lids	Safety Yellow	Acrylic Traffic Paint
Gate Well Lids	White	Acrylic Traffic Paint
Gate Well Lids - Fire Hydrant Valves	White	Acrylic Traffic Paint
Gate Well Lids - Normally Closed Valves	Safety Red	Acrylic Traffic Paint
Air/Vac Assemblies	Safety Yellow	Acrylic or Epoxy/Urethane
Air/Vac Enclosures	Chocolate Brown	Fusion Bonded Polyester (Section 09915)
Water Test Station Enclosures	Chocolate Brown	Fusion Bonded Polyester (Section 09915)
Protector Posts	White	Acrylic or Epoxy/Urethane
Above Ground Piping	Per City	Acrylic or Epoxy/Urethane

PART 2 MATERIALS

2.1 GENERAL

A. Coating products and colors shall be selected from the tables above.

B. All materials of a specified paint system(s), including prime, intermediate, finish, and touch-up coats shall be provided by the same manufacturer.

C. Thinners, cleaners, driers and other additives shall be as recommended by the coating manufacturer for the specified paint system(s) and shall be approved by the City.

D. All coating products shall be delivered to the job site in original and unopened containers.

2.2 EPOXY PAINT SYSTEM

A. Prime, Intermediate, Finish and Touch-Up Coats: VOC-compliant, two-component, chemically cured epoxy.

2.3 EPOXY/URETHANE PAINT SYSTEM

A. Prime and Intermediate Coats: Field-applied, VOC-compliant, surface tolerant, two-component, chemically cured epoxy.

B. Finish and Touch-Up Coats: Field-applied, VOC-compliant, two-component, chemically cured aliphatic urethane semi-gloss enamel.

2.4 ACRYLIC PAINT SYSTEM

A. Acrylic Paint System may be either solvent-borne or waterborne as described below:

1. Solvent-borne Acrylic Paint System:

- Prime, Intermediate, Finish and Touch-Up Coats: Field-applied, VOC-compliant, solvent-borne acrylic paint.

2. Waterborne Acrylic Paint System:

- Prime, Intermediate, Finish and Touch-Up Coats: Field-applied, VOC compliant, waterborne acrylic paint.

2.5 ACRYLIC TRAFFIC PAINT SYSTEM

A. Prime and Finish Coats: Field-applied, VOC-compliant, rapid-drying, weather and abrasion resistant waterborne acrylic paint containing 100% solids by volume.

2.6 PAINT COLORS

A. Safety Yellow, Safety Purple and Safety Red paint colors shall be as specified in Federal OSHA regulations.

B. White paint color shall be as specified by the California Department of Transportation for striping.

C. Chocolate Brown paint color shall be as specified elsewhere.

D. Successive coats of each paint color shall be of a slightly different shade, as directed by the City, to facilitate the inspection of surface coverage of each coat. The true colors specified above shall be used for all Finish and Touch-up coats.

PART 3 EXECUTION

3.1 LIMITATIONS TO THE APPLICATION OF COATINGS

A. Apply coatings in accordance with the manufacturer's recommendations. Do not apply coatings under adverse weather conditions. If any of the following minimum conditions are present, the application of coatings shall be delayed or postponed until conditions are favorable.

1. During rain, fog, or mist, or when the relative humidity exceeds 80 percent.
2. When the surface to be coated is wet, moist, or contaminated with any foreign matter.
3. When the surrounding air temperature or the temperature of the surface

to be coated is below 13° C (55° F).

4. When the temperature of the surface to be coated is more than 2.8° C (5° F) below the air temperature or when the surface temperature is 49 C (120° F) or above.

B. When the surface temperature is less than 2.8° C (5° F) above the dew point or is expected to be so within twelve hours after application of coating. If a change in weather conditions results in damage to a newly applied coating, restore the affected coatings to their specified condition as directed by the City.

3.2 PROTECTION OF SURFACES NOT TO BE PAINTED

Remove, mask, or otherwise protect hardware, switch plates, aluminum surfaces, machined surfaces, couplings, shafts, nameplates and other surfaces not intended to be painted. Protect working parts of mechanical and electrical equipment from damage during surface preparation and the painting process. Provide drop cloths or masking to prevent paint materials from dripping or accumulating on adjacent surfaces.

3.3 FIELD TOUCH-UP OF SHOP-APPLIED PRIME COATS

A. Prior to field touch-up, prepare the surface in accordance with the manufacturer's recommendations and as directed by the City.

B. Reapply primer as required to cover all scratched, abraded, or deficient areas.

3.4 SURFACE PREPARATION

A. Do not prepare more surface area than can be coated in the same workday.

B. Surface preparation shall conform to the SSPC specifications as follows:

Solvent Cleaning	SP-1
Hand Tool Cleaning	SP-2
Power Tool Cleaning	SP-3
White Metal Blast Cleaning	SP-5
Commercial Blast Cleaning	SP-6
Brush-Off Blast Cleaning	SP-7
Pickling	SP-8
Near-White Blast Cleaning	SP-10
Power Tool Cleaning to Bare Metal	SP-11

C. Wherever the words "solvent cleaning", "hand tool cleaning", "wire brushing", "blast cleaning" or similar words are used in these specifications or in paint manufacturer's specifications, they shall be understood to refer to the applicable SSPC Surface Preparation Specifications listed above.

D. Surface preparation shall be as specified herein, or as directed by the City.

E. Unless otherwise directed by the City, do not blast-clean items that have previously been factory primed or painted.

3.5 PROCEDURES FOR APPLICATION

A. Conform to the requirements of SSPC-PA 1, Shop, Field, and Maintenance Painting. Follow the recommendations of the coating manufacturer, if more restrictive, including the selection of spray equipment, brushes, rollers, mixing, drying time, temperature and humidity limitations during application, and safety precautions. The City will review procedures for the application of coatings. The City's decision will be final as to interpretation and/or conflict between these Specifications and the recommendations of the coating manufacturer.

B. Stir, strain, and keep coating materials at a uniform consistency during application. Where the City permits thinning, do not reduce the coating material more than is necessary to obtain the proper application characteristics and to obtain the specified dry film thickness. Do not exceed the maximum thinning rate allowed by the manufacturer. Stir coating materials at all times when adding thinner.

C. Apply each layer of coating evenly, free from brush marks, sags, runs, bridges, shiners, laps or other imperfections or other evidence of poor workmanship. Visible areas of chipped, peeled, or abraded paint shall be hand or power-sanded, feathering the edges. The areas shall then be primed and finish coated in accordance with the specifications. Finished surfaces shall be free from defects and blemishes prior to final acceptance.

3.6 EPOXY PAINT SYSTEM APPLICATION

A. Surface preparation for the Epoxy Paint System shall be in accordance with SSPC-SP-6, Commercial Blast Cleaning. If Commercial Blast Cleaning is not feasible, prepare surfaces in accordance with SSPC-SP-11, Power Tool Cleaning to Bare Metal.

B. The Epoxy Paint System shall consist of an epoxy prime coat, an epoxy intermediate coat, and epoxy finish coat(s) to provide a total dry film thickness of 9 mils to 15 mils. Apply the coatings in accordance with the manufacturer's recommended film thickness, adding finish coats as necessary to meet the minimum total dry film thickness specified above.

C. Observe minimum and maximum re-coat times and specified by the manufacturer. If these times are exceeded, the surface shall be re-prepared as recommended by the manufacturer and as directed by the City prior to receiving additional coats.

3.7 EPOXY/URETHANE PAINT SYSTEM APPLICATION

A. Surface preparation for the Epoxy/Urethane Paint System shall be in accordance with SSPC-SP-6, Commercial Blast Cleaning. If Commercial Blast Cleaning is not feasible, prepare surfaces in accordance with SSPC-SP-11, Power Tool Cleaning to Bare Metal.

B. The Epoxy/Urethane Paint System shall consist of an epoxy prime coat, an epoxy intermediate coat, and compatible urethane finish coat(s) to provide a total dry film thickness of 9 mils to 15 mils. Apply the coatings in accordance with the manufacturer's recommended film thickness, adding finish coats as necessary to meet the minimum total dry film thickness specified above.

C. Observe minimum and maximum re-coat times and specified by the manufacturer. If these times are exceeded, the surface shall be re-prepared as recommended by the manufacturer and as directed by the City prior to receiving additional coats.

3.8 ACRYLIC PAINT SYSTEM

A. Surface preparation for the Acrylic Paint System shall be in accordance with SSPC-SP-6, Commercial Blast Cleaning. If Commercial Blast Cleaning is not feasible, prepare surfaces in accordance with SSPC-SP-11, Power Tool Cleaning to Bare Metal.

B. The Acrylic Paint System shall consist of an acrylic prime coat, an acrylic intermediate coat, and acrylic finish coat(s) to provide a total dry film thickness of 9 mils to 15 mils. Apply the coatings in accordance with the manufacturer's recommended film thickness, adding finish coats as necessary to meet the minimum total dry film thickness specified above.

C. Observe minimum and maximum re-coat times and specified by the manufacturer. If these times are exceeded, the surface shall be re-prepared as recommended by the manufacturer and as directed by the City prior to receiving additional coats.

3.9 ACRYLIC TRAFFIC PAINT SYSTEM

A. Surface preparation for the Acrylic Traffic Paint System shall be in accordance with SSPC-SP-6. , Commercial Blast Cleaning. If Commercial Blast Cleaning is not feasible, prepare surfaces in accordance with SSPC-SP-11, Power Tool Cleaning to Bare Metal.

B. The Acrylic Traffic Paint System shall consist of a rapid-drying acrylic prime coat and a rapid-drying acrylic finish coat to provide a total dry film thickness of 6 mils to 10 mils.

C. Observe minimum and maximum re-coat times and specified by the manufacturer. If these times are exceeded, the surface shall be re-prepared as recommended by the manufacturer and as directed by the City prior to receiving additional coats.

END OF SECTION

SECTION 10210

WALL LOUVERS

PART 1 GENERAL

1.1 SUMMARY

A. Section Includes:
   1. Fixed louvers.

1.2 SUBMITTALS

A. Shop Drawings: Indicate louver layout plan and elevations; head, jamb and sill details; blade configuration, screens, blank-out areas required, and frames.

B. Product Data: Submit data describing design characteristics, maximum recommended air velocity, design free area, materials and finishes.

C. Samples: Submit two samples illustrating finish and color of exterior surfaces.

D. Manufacturer's Certificate: Certify products meet or exceed specified requirements.

1.3 QUALITY ASSURANCE

A. Perform Work in accordance with AMCA Certification for Water Penetration, Air Performance, and Wind Driven Rain, in compliance with AMCA 500-L. Attach AMCA seal to louvers.

1.4 WARRANTY

A. Furnish twenty year manufacturer warranty for louvers.

B. Warranty: Include coverage for degradation of finish.

PART 2 PRODUCTS

2.1 WALL LOUVERS – ACOUSTIC

A. Louver Configuration: 6 inch deep louvers with blades on 45 degree slope; sound absorbing fill material, and inner surface of perforated sheet metal, channel frame, bird screen.

B. Materials:
   1. Louvers: 16 gage galvanized steel, welded assembly, with factory prime coat and baked enamel finish.
   2. Inner Surface: Minimum 20 gage thick perforated galvanized steel.
   3. Fill: Glass fiber or mineral wool of minimum 4 lb/cu-ft density
   4. Fill Liner: Bonded glass fiber matting. 1 mil Mylar film

C. Free Area: As noted on Plans.

D. Water Penetration: As noted on Plans

2.2 COMPONENTS

A. Insect Screen: aluminum mesh set in aluminum frame.

B. Mounting: Interior angle flange.

2.3 ACCESSORIES

A. Fasteners and Anchors: Galvanized steel type.

B. Primer: Zinc chromate, alkyd type.

C. Flashings: Of same material as louver frame.

D. Sealants: As recommended by Manufacturer

2.4 FACTORY FINISHING

A. Exterior Steel Surfaces**.** Pre-painted finish of color as selected.

B. Interior Steel Surfaces: Galvanized

2.5 ACOUSTIC PERFORMANCE

A. As noted on Plans:

PART 3 EXECUTION

3.1 EXAMINATION

A. Verify prepared openings and flashings are ready to receive Work and opening dimensions are as instructed by louver manufacturer.

3.2 INSTALLATION

A. Install louvers level and plumb.

B. Install flashings and align louver assembly to ensure moisture shed from flashings and diversion of moisture to exterior.

C. Secure louvers in opening framing with exposed fasteners.

D. Install frame to intake and discharge louvers. Install bird screens to intake and discharge louvers.

E. Install perimeter sealant and backing rod.

END OF SECTION

SECTION 10523

FIRE EXTINGUISHERS

PART 1 GENERAL

1.1 SUMMARY

A. Section includes fire extinguishers; and brackets for wall mounting.

1.2 REFERENCES

A. National Fire Protection Association:
   1. NFPA 10 - Standard for Portable Fire Extinguishers.

B. Underwriters Laboratories Inc.:
   1. UL - Fire Protection Equipment Directory.

1.3 PERFORMANCE REQUIREMENTS

A. Conform to NFPA 10.

B. Provide extinguishers classified and labeled by Underwriters Laboratories Inc. for purpose specified and indicated.

1.4 SUBMITTALS

A. Section 01330 - Submittal Procedures: Submittal procedures.

B. Product Data: Submit extinguisher operational features, color and finish, anchorage details.

C. Manufacturer's Certificate: Certify Products meet or exceed specified requirements.

1.5 CLOSEOUT SUBMITTALS

A. Operation and Maintenance Data: Submit test, refill or recharge schedules and re-certification requirements.

1.6 QUALITY ASSURANCE

A. Perform Work in accordance with 2013 California Fire Code.

PART 2 PRODUCTS

2.1 FIRE EXTINGUISHERS

A. Dry Chemical Type: Stainless steel tank, with pressure gage; Class 4A: 80B: C, Size 10.

B. Extinguisher Finish: Stainless steel, No. 4 finish.

2.2 ACCESSORIES

A. Extinguisher Brackets: Formed steel, white enamel finish**.**

PART 3 EXECUTION

3.1 INSTALLATION

A. Install wall brackets, maximum 48 inches from finished floor to top of extinguisher handle.

B. Secure rigidly in place.

C. Place extinguishers on wall brackets.

END OF SECTION

SECTION 13340

PRE-ENGINEERED STRUCTURES

PART 1 GENERAL

1.1 SUMMARY

A. Section Includes: Provide pre-engineered building structure with accessories and components as required for complete structure conforming to applicable codes and architectural design and configuration indicated on Drawings.
   1. Pre-engineered building systems include structural framing and bracing including:
      a. New generator building ~~with MCC room~~
      b. Structural framing includes columns, rafters, struts, purlins, and girts.
   2. Provide accessories, components, and materials as required for complete metal building systems.
   3. Galvanize pre-engineered structural components comparable to G90 coating.
   4. Contractor Option: Pre-engineered structure manufacturer may also provide vinyl faced batt insulation, metal roof system, and wall panel system specified in Division 7.
   ~~5. New pre-engineered building shall be adjacent but structurally independent from existing metal building. Flashing will be installed to permit independent movement in seismic events while maintaining waterproofness.~~

B. Related Sections:
   1. Division 3: Concrete floor and foundations.
   2. Section 05090: ANCHORAGE IN CONCRETE.
   3. Section 07210: THERMAL INSULATION.
   4. Section 07613: MANUFACTURED SHEET METAL ROOFING.
   5. Section 07468: METAL SIDING.
   6. Division 8: Openings (doors, windows, louvers).
   7. Division 9: Field finishes.
   8. Section 09900: PAINTING AND COATING

1.2 REFERENCES

A. ALUMINUM ASSOCIATION (AA)
   1. AA ADM-105 (2005; Errata 2005) Aluminum Design Manual
   2. AA ASD1 (2009) Aluminum Standards and Data

B. AMERICAN ARCHITECTURAL MANUFACTURERS ASSOCIATION (AAMA)
   1. AAMA/WDMA/CSA 101/I.S.2/A440 (2008; Update 1 2008; Update 2 2008; Update 3 2009) North American Fenestration Standard/Specification for Windows, Doors, and Skylights

C. AMERICAN INSTITUTE OF STEEL CONSTRUCTION (AISC)
   1. AISC 325 (2005) Steel Construction Manual
   2. ANSI/AISC 341 (2005; Suppl No. 1 2005) Seismic Provisions for Structural Steel Buildings
   3. ANSI/AISC 360 (2005) Specification for Structural Steel Buildings

D. AMERICAN IRON AND STEEL INSTITUTE (AISI)
   1. AISC/AISI 121 (2004) Standard Definitions for Use in the Design of Steel Structures
   2. AISI SG03-3 (2002; Suppl 2001-2004; R 2008) Cold-Formed Steel Design Manual Set

E. AMERICAN SOCIETY OF CIVIL ENGINEERS (ASCE)
1. ASCE 7-10 (2010) Minimum Design Loads for Buildings and Other Structures

F. AMERICAN WELDING SOCIETY (AWS)
1. AWS A5.1/A5.1M (2004) Specification for Carbon Steel Electrodes for Shielded Metal Arc Welding
2. AWS D1.1/D1.1M (2010) Structural Welding Code – Steel
3. AWS D1.3/D1.3M (2008; Errata 2008) Structural Welding Code - Sheet Steel

G. ASTM INTERNATIONAL (ASTM)
1. ASTM A 1008/A 1008M (2010) Standard Specification for Steel, Sheet, Cold-Rolled, Carbon, Structural, High-Strength Low-Alloy and High-Strength Low-Alloy with Improved Formability, Solution Hardened, and Bake Hardened
2. ASTM A 1011/A 1011M (2010) Standard Specification for Steel, Sheet, and Strip, Hot-Rolled, Carbon, Structural, High-Strength Low-Alloy and High-Strength Low-Alloy with Improved Formability and Ultra-High Strength
3. ASTM A 123/A 123M (2009) Standard Specification for Zinc (Hot-Dip Galvanized) Coatings on Iron and Steel Products
4. ASTM A 153/A 153M (2009) Standard Specification for Zinc Coating (Hot-Dip) on Iron and Steel Hardware
5. ASTM A 193/A 193M (2010a) Standard Specification for Alloy-Steel and Stainless Steel Bolting Materials for High-Temperature Service and Other Special Purpose Applications
6. ASTM A 307 (2007b) Standard Specification for Carbon Steel Bolts and Studs, 60 000 PSI Tensile Strength
7. ASTM A 325 (2010) Standard Specification for Structural Bolts, Steel, Heat Treated, 120/105 ksi Minimum Tensile Strength
8. ASTM A 325M (2009) Standard Specification for Structural Bolts, Steel, Heat Treated, 830 MPa Minimum Tensile Strength (Metric)
9. ASTM A 36/A 36M (2008) Standard Specification for Carbon Structural Steel
10. ASTM A 463/A 463M (2009a) Standard Specification for Steel Sheet, Aluminum- Coated, by the Hot-Dip Process
11. ASTM A 475 (2003; R 2009e1) Standard Specification for Zinc-Coated Steel Wire Strand
12. ASTM A 500/A 500M (2010a) Standard Specification for Cold-Formed Welded and Seamless Carbon Steel Structural Tubing in Rounds and Shapes
13. ASTM A 501 (2007) Standard Specification for Hot-Formed Welded and Seamless Carbon Steel Structural Tubing
14. ASTM A 529/A 529M (2005; R 2009) Standard Specification for High-Strength Carbon-Manganese Steel of Structural Quality
15. ASTM A 53/A 53M (2010) Standard Specification for Pipe, Steel, Black and Hot- Dipped, Zinc-Coated, Welded and Seamless
16. ASTM A 563 (2007a) Standard Specification for Carbon and Alloy Steel Nuts
17. ASTM A 563M (2007) Standard Specification for Carbon and Alloy Steel Nuts (Metric)
18. ASTM A 572/A 572M (2007) Standard Specification for High-Strength Low-Alloy Columbium-Vanadium Structural Steel
19. ASTM A 606/A 606M (2009a) Standard Specification for Steel Sheet and Strip, High- Strength, Low-Alloy, Hot-Rolled and Cold-Rolled, with Improved Atmospheric Corrosion Resistance
20. ASTM A 653/A 653M (2009a) Standard Specification for Steel Sheet, Zinc-Coated (Galvanized) or Zinc-Iron Alloy-Coated (Galvannealed) by the Hot-Dip Process
21. ASTM A 755/A 755M (2003; R 2008) Standard Specification for Steel Sheet, Metallic Coated by the Hot-Dip Process and Prepainted by the Coil-Coating Process for Exterior Exposed Building Products
22. ASTM A 780/A 780M (2009) Standard Practice for Repair of Damaged and

Uncoated Areas of Hot-Dip Galvanized Coatings
23. ASTM A 792/A 792M (2009a) Standard Specification for Steel Sheet, 55% Aluminum- Zinc Alloy-Coated by the Hot-Dip Process
24. ASTM A 992/A 992M (2006a) Standard Specification for Structural Steel Shape
25. ASTM B 117 (2009) Standing Practice for Operating Salt Spray (Fog) Apparatus
26. ASTM B 209 (2007) Standard Specification for Aluminum and Aluminum-Alloy Sheet and Plate
27. ASTM B 209M (2007) Standard Specification for Aluminum and Aluminum-Alloy Sheet and Plate (Metric)
28. ASTM B 221 (2008) Standard Specification for Aluminum and Aluminum-Alloy Extruded Bars, Rods, Wire, Profiles, and Tubes
29. ASTM B 221M (2007) Standard Specification for Aluminum and Aluminum-Alloy Extruded Bars, Rods, Wire, Profiles, and Tubes (Metric)
30. ASTM B 695 (2004; R 2009) Standard Specification for Coatings of Zinc Mechanically Deposited on Iron and Steel
31. ASTM C 1289 (2010) Standard Specification for Faced Rigid Cellular Polyisocyanurate Thermal Insulation Board
32. ASTM C 1363 (2005) Standard Test Method for Thermal Performance of Building Materials and Envelope Assemblies by Means of a Hot Box Apparatus
33. ASTM C 273/C 273M (2007a) Shear Properties of Sandwich Core Materials
34. ASTM C 518 (2010) Steady-State Thermal Transmission Properties by Means of the Heat Flow Meter Apparatus
35. ASTM C 553 (2008) Standard Specification for Mineral Fiber Blanket Thermal Insulation for Commercial and Industrial Applications
36. ASTM C 612 (2010) Mineral Fiber Block and Board Thermal Insulation
37. ASTM C 665 (2006) Mineral-Fiber Blanket Thermal Insulation for Light Frame Construction and Manufactured Housing
38. ASTM C 920 (2010) Standard Specification for Elastomeric Joint Sealants
39. ASTM C 991 (2008e1) Flexible Glass Fiber Insulation for Metal Buildings
40. ASTM D 1056 (2007) Standard Specification for Flexible Cellular Materials - Sponge or Expanded Rubber
41. ASTM D 1308 (2002; R 2007) Effect of Household Chemicals on Clear and Pigmented Organic Finishes
42. ASTM D 1621 (2010) Compressive Properties of Rigid Cellular Plastics
43. ASTM D 1622 (2008) Apparent Density of Rigid Cellular Plastics
44. ASTM D 1667 (2005) Flexible Cellular Materials – Poly (Vinyl Chloride) Foam (Closed-Cell)
45. ASTM D 2244 (2009b) Calculation of Color Tolerances and Color Differences from Instrumentally Measured Color Coordinates
46. ASTM D 2247 (2010) Testing Water Resistance of Coatings in 100% Relative Humidity
47. ASTM D 2794 (1993; R 2004) Resistance of Organic Coatings to the Effects of Rapid Deformation (Impact)
48. ASTM D 3363 (2005) Film Hardness by Pencil Test
49. ASTM D 4214 (2007) Standard Test Method for Evaluating the Degree of Chalking of Exterior Paint Films
50. ASTM D 522 (1993a; R 2008) Mandrel Bend Test of Attached Organic Coatings
51. ASTM D 523 (2008) Standard Test Method for Specular Gloss
52. ASTM D 6226 (2010) Standard Test Method for Open Cell Content of Rigid Cellular Plastics
53. ASTM D 714 (2002; R 2009) Evaluating Degree of Blistering of Paints
54. ASTM D 822 (2001; R 2006) Filtered Open-Flame Carbon-Arc Exposures of Paint and Related Coatings
55. ASTM D 968 (2005e1) Abrasion Resistance of Organic Coatings by Falling Abrasive
56. ASTM DEFONLINE (2008) ASTM Online Dictionary of Engineering Science and Technology
57. ASTM E 119 (2010b) Standard Test Methods for Fire Tests of Building

Construction and Materials
58. ASTM E 136 (2009b) Behavior of Materials in a Vertical Tube Furnace at 750 Degrees C
59. ASTM E 1592 (2005) Structural Performance of Sheet Metal Roof and Siding Systems by Uniform Static Air Pressure Difference
60. ASTM E 1646 (1995; R 2003) Standard Test Method for Water Penetration of Exterior Metal Roof Panel Systems by Uniform Air Pressure Difference
61. ASTM E 168 (2006) General Techniques of Infrared Quantitative Analysis
62. ASTM E 283 (2004) Determining the Rate of Air Leakage Through Exterior Windows, Curtain Walls, and Doors Under Specified Pressure Differences Across the Specimen
63. ASTM E 331 (2000; R 2009) Water Penetration of Exterior Windows, Skylights, Doors, and Curtain Walls by Uniform Static Air Pressure Difference
64. ASTM E 84 (2010b) Standard Test Method for Surface Burning Characteristics of Building Materials
65. ASTM E 96/E 96M (2005) Standard Test Methods for Water Vapor Transmission of Materials
66. ASTM F 1554 (2007a) Standard Specification for Anchor Bolts, Steel, 36, 55, and 105- ksi Yield Strength
67. ASTM F 1852 (2008) Standard Specification for "Twist Off" Type Tension Control Structural Bolt/Nut/Washer Assemblies, Steel, Heat Treated, 120/105 ksi Minimum Tensile Strength
68. ASTM F 436 (2010) Hardened Steel Washers
69. ASTM F 436M (2010) Hardened Steel Washers (Metric)
70. ASTM F 844 (2007a) Washers, Steel, Plain (Flat), Unhardened for General Use
71. ASTM G 23 (1996) Operating Light-Exposure Apparatus (Carbon-Arc Type) With and Without Water for Exposure of Nonmetallic Materials

H. METAL BUILDING MANUFACTURERS ASSOCIATION (MBMA)
1. MBMA MBSM (2002) Metal Building Systems Manual

I. NATIONAL ASSOCIATION OF ARCHITECTURAL METAL MANUFACTURERS (NAAMM)
1. NAAMM AMP 500 (2006) Metal Finishes Manual

J. NATIONAL FIRE PROTECTION ASSOCIATION (NFPA)
1. NFPA 252 (2008) Standard Methods of Fire Tests of Door Assemblies
2. NFPA 80 (2010; TIA 10-2) Standard for Fire Doors and Other Opening Protectives

K. NATIONAL ROOFING CONTRACTORS ASSOCIATION (NRCA)
1. NRCA 0405 (2001; R 2003, 5th Ed) Roofing and Waterproofing Manual

L. SHEET METAL AND AIR CONDITIONING CONTRACTORS' NATIONAL ASSOCIATION (SMACNA)
1. SMACNA 1793 (2003) Architectural Sheet Metal Manual, 6th Edition

M. STEEL WINDOW INSTITUTE (SWI)
1. SWI AGSW (2002) Architect's Guide to Steel Windows

N. THE SOCIETY FOR PROTECTIVE COATINGS (SSPC)
1. SSPC Paint 15 (1999; E 2004) Steel Joist Shop Primer
2. SSPC Painting Manual (2002) Good Painting Practice, Steel Structures Painting Manual, Volume 1
3. SSPC SP 2 (1982; E 2004) Hand Tool Cleaning

O. U.S. FEDERAL EMERGENCY MANAGEMENT AGENCY (FEMA)

1. FEMA 302 (Feb 1998) NEHRP Recommended Provisions for Seismic Regulations for New Buildings and Other Structures

P. UNDERWRITERS LABORATORIES (UL)
1. UL 580 (2006; Reprint Jul 2009) Tests for Uplift Resistance of Roof Assemblies
2. UL Bld Mat Dir (2010) Building Materials Directory

Q. CALIFORNIA BUILDING CODE (CBC)
1. California Building Code (2013)

1.3 ADMINISTRATIVE REQUIREMENTS

A. Design/Build: Provide all required engineering for pre-engineered structures to ensure compliance with applicable codes and Contract Documents.

1.4 SUBMITTALS

A. Manufacturer's Qualifications: Submit documentation of manufacturer's experience and quality certifications.

B. Product Data: Submit manufacturer's product information, test data, specifications, and installation instructions for building components and accessories.

C. Structural Drawings and Calculations: Submit complete structural calculations and drawings sealed by a California-licensed Structural Engineer for approval prior to placing foundation concrete.

D. Shop Drawings: Submit complete erection drawings showing anchor bolts settings, sidewall, end wall, and roof framing, transverse cross sections, and accessory installation details.
1. Clearly indicate assembly of building components.
2. All shop drawings shall be signed and sealed by a California licensed Structural Engineer.

E. Certificates:
1. Submit written certification prepared and signed by a California licensed Structural Engineer verifying building design meets indicated loading requirements and applicable codes and regulations.
2. Submit proof of manufacturer's AISC category MB certification.

F. Design/Build Certificates: Submit certification signed by California licensed Structural Engineer indicating compliance with Contract Documents and code requirements and stating that the building complies in all respects with California Standards for Essential Facilities.

G. Manufacturer's Warranty

1.5 QUALITY ASSURANCE

A. Qualification of Manufacturers: Provide pre-engineered metal buildings as produced by a manufacturer with not less than 5 years successful experience in fabrication of pre-engineered metal buildings of type and quality required.
1. Manufacturer to be certified in accordance with American Institute of Steel Construction (AISC) quality certification program category MB for metal buildings.

B. Qualification of Erection Contractor: An experienced erector who has specialized in

erecting and installing work similar in material, design, and extent to that indicated for this Project and must be approved and certified by the metal building system manufacturer.

1.6 CONFERENCES

A. Pre-Erection Conference: After submittals are received and approved but before metal building system work, including associated work, is performed, hold a pre-erection conference to review the following:
   1. The detail drawings, specifications, and manufacturer's descriptive and technical literature.
   2. Finalize construction schedule and verify availability of materials, erector's personnel, equipment, and facilities needed to make progress and avoid delays.
   3. Methods and procedures related to metal building system erection, including, but not limited to: qualification of manufacturer, qualification of erector, manufacturer's catalog data, building design analysis, written instructions and test reports.
   4. Support conditions for compliance with requirements, including alignment between and erection of structural members.
   5. Flashing, special roofing and siding details, roof and wall penetrations, openings, and condition of other construction that will affect metal building system, including coatings and base metals, factory color finish performance requirements, system components, and certificates for coil stock.
   6. Governing regulations and requirements for, certificates, insurance, tests and inspections if applicable. Temporary protection requirements for metal panel assembly during and after installation.
   7. Samples of aluminized steel repair paint, galvanizing repair paint, and enamel repair paint.

B. Pre-Roofing and Siding Installation Conference: After structural framing system erection and approval but before roofing, siding, insulation work, including associated work, is performed; hold a pre-roofing and siding conference to review the following:
   1. Examine purlins, sub-girts and formed shapes conditions for compliance with requirements, including flatness and attachment to structural members.
   2. Review structural limitations of purlins, sub-girts and formed shapes during and after roofing and siding.
   3. Review flashings, special roof and wall details, roof drainage, roof and wall penetrations, roof equipment curbs, and condition of other construction that will affect the metal building system.
   4. Review temporary protection requirements for metal roof and wall panels' assembly during and after installation.
   5. Review roof and wall observation and repair procedures after metal building system erection.

C. Field Measurements

D. Established Dimensions for Foundations
   1. Comply with established dimensions on approved anchor-bolt plans, established foundation dimensions, and proceed with fabricating structural framing. Do not proceed without verifying field measurements.
   2. Coordinate anchor-bolt installation to ensure that actual anchorage dimensions correspond to established dimensions.

E. Coordinate construction to ensure that actual building dimensions, locations of structural members, and openings correspond to established dimensions.

F. Verification Record

   1. Verify locations of all framing and opening dimensions by field measurements before metal panel fabrication and indicate measurements on Shop Drawings.

1.7 COORDINATION

A. Coordinate size and location of concrete foundations and casting of anchor-bolt inserts into foundation walls and footings. Concrete, reinforcement, and formwork requirements are specified in Section 03-30-0~~0~~ CAST-IN-PLACE CONCRETE.

B. Coordinate installation of muffler hanger support from roof above generator.

C. Coordinate installation of roof and wall penetrations.

D. Coordinate metal panel assemblies with rain drainage work, flashing, trim, and construction of supports and other adjoining work.

1.8 WARRANTY

A. Building System Warranty: Furnish manufacturer's no-dollar-limit warranty for the metal building system. The warranty period is to be no less than 10 years from the date of acceptance of the work and be issued directly to the Government. The warranty must provide that if within the warranty period, the metal building system shows evidence of deterioration resulting from defective materials and/or workmanship, correcting of any defects is the responsibility of the metal building system manufacturer. Repairs that become necessary because of defective materials and workmanship while metal building system is under warranty are to be performed within 32 hours after notification, unless additional time is approved by the Contracting Officer. Failure to perform repairs within 32 hours of notification will constitute grounds for having emergency repairs performed by others and will not void the warranty.

1.1 DELIVERY, STORAGE, AND HANDLING

A. Deliver and store components, sheets, panels and other manufactured items so they will not be damaged or deformed.

B. Stack materials on platforms or pallets, covered with tarpaulins or other suitable weathertight ventilated covering.

C. Store metal sheets or panels so water accumulations will drain freely.

D. Do not store sheets or panels in contact with other materials that might cause staining.

PART 2 – PRODUCTS

2.1 SYSTEMS MANUFACTURERS

A. Butler Manufacturing Co.

B. Star Building Systems, Oklahoma City, Oklahoma.

C. Substitutions: Refer to Division 1.

2.2 MATERIALS

A. System Description: Provide a complete, integrated pre-engineered metal building structure system capable of withstanding structural and other loads, thermally induced movement and exposure to weather without failure or infiltration of water into building interior. Include primary and secondary framing and accessories complying with

requirements indicated.

B. Performance Criteria:
   1. Design Requirements: Provide size and configuration as indicated on Drawings.
      a. Structural Framing: Design primary and secondary structural members and exterior covering materials for applicable loads and combinations of loads in accordance with the Metal Building Manufacturer's Association (MBMA) "Design Practices Manual."
      b. Structural Steel: Comply with American Institute of Steel Construction's (AISC) "Specifications for the Design, Fabrication and Erection of Structural Steel for Buildings" for design requirements and allowable stresses.
      c. Light Gage Steel: Comply with American Iron and Steel Institute's (AISI) "Specification for the Design of Cold Formed Steel Structural Members" and "Design of Light Gage Steel Diaphragms" for design and allowable stresses.
      d. Welded Connections: Comply with American Welding Society's (AWS) "Standard Code for Arc and Gas Welding in Building Construction" for welding procedures.
   2. Design Loads: Basic design loads, as well as auxiliary and collateral loads, shall conform to California Building Code 2013.
      a. Determine design loads not listed below based on applicable codes, including dead load, live load, wind load and seismic load.
         1) Wind Load Factors:
            - Basic Wind Speed: V = 115 MPH
            - Importance Factor: I_w = 1.15
            - Exposure Category: C
         2) Seismic Load Factors:
            - Seismic Importance Factor: I_e = 1.25
            - Occupancy Category: II
            - Mapped Spectral Response Accelerations: S_S = 1.50g, S_1 = 0.60g
            - Site Class: C
            - Spectral Response Coefficients: S_{DS} = 1.0g, S_{D1} = 0.52g
            - Seismic Design Category: D
      b. Collateral loads include additional dead loads over and above weight of metal building system such as sprinkler systems and mechanical systems.
      c. Design each member to withstand stresses resulting from combinations of loads that produce maximum allowable stresses in that member as prescribed in MBMA's "Design Practices Manual."
   3. Maximum Allowable Deflections: Maximum L/240 unless otherwise indicated.
      a. Frame Sidesway:
         1) Total Gravity: H/150.
         2) Total Lateral: H/400.
   4. Load Combinations: Comply with building code requirements with minimum load combinations.

C. Regulatory Requirements: Comply with California Building Standards Code, Title 24, for building structural design and other applicable code requirements based on work included under this section.

D. Hot-Rolled Structural Shapes: Comply with requirements of ASTM A36 or A529.

E. Tubing or Pipe: Comply with requirements of ASTM A500, Grade B, A501, or A53.

F. Members Fabricated from Plate or Bar Stock: Provide 50,000 psi minimum yield strength. Comply with requirements of ASTM A529, A570 or A572.

G. Members Fabricated by Cold Forming: Comply with requirements of ASTM A607, Grade 50.

H. Galvanized Steel Sheet: Comply with requirements of ASTM A446 with G90 coating. "Class" to suit building manufacturer's standards.

2.3 FABRICATION

A. Design shop fabricated components and necessary field connections required for erection to permit easy assembly and disassembly.

B. Fabricate components in such a manner that once assembled, they may be disassembled, repackaged and reassembled with minimum amount of labor.

C. Clearly and legibly mark each piece and part of assembly to correspond with previously prepared erection drawings, diagrams and instruction manuals.

D. Structural Framing Components: As required for structure as indicated on Drawings.
   1. Provide frames factory welded and shop painted. Furnish frames complete with attachment plates, bearing plates and splice members. Factory drill frames for bolted field assembly.
      a. Provide length of span and spacing of frames as indicated. Slight variations in length of span and frame spacing may be acceptable if necessary to meet manufacturer's standard.
      b. Provide rigid frames at endwalls where indicated.
   2. Secondary Framing: Provide not less than 16 gage shop painted rolled formed sections for following secondary framing members.
   3. Bolts: Comply with requirements of ASTM A325 for design loads and connection details.
      a. Provide shop painted bolts; when units are in direct contact with panels, provide zinc-plated or cadmium-plated bolts.
   4. Fabrication: Shop fabricate structural framing components to indicated size and section complete with base plates, bearing plates and other plates required for erection, welded in place.
      a. Provide required holes for anchoring or for connections either shop drilled or punched to template dimensions.
      b. Shop Connections: Provide power riveted, bolted or welded shop connections.
      c. Field Connections: Provide bolted field connections.

PART 3 – EXECUTION

3.1 ERECTION

A. Framing: Erect structural framing true to line, level and plumb, rigid and secure. Level base plates to true even plane with full bearing to supporting structures, set with double-nutted anchor bolts.
   1. Use non-shrinking grout to obtain uniform bearing and to maintain level base line elevation. Moist cure grout for not less than 7 days after placement.

B. Purlins and Girts: Provide purlins with tight fitting closure channels and fascias. Locate and space wall girts to suit door and window arrangements and heights.
   1. Secure purlins and girts to structural framing and hold rigidly to straight line by sag rods.

C. Bracing: Provide diagonal rod or angle bracing in both roof and sidewalls as indicated.
   1. Movement resisting frames may be used in lieu of sidewall rod bracing, to

suit manufacturer's standards.

2. Where diaphragm strength of roof or wall covering is adequate to resist wind forces, rod or other forms of bracing will not be required.

D. Framed Openings: Provide shapes of proper design and size to reinforce openings and to carry loads and vibrations imposed, including equipment furnished under mechanical or electrical work.

1. Securely attach to building structural frame.

E. Tolerances: Framing members to be plumb, level, or aligned not to exceed deviation of 1:300.

3.2 SPECIAL INSPECTION AND TESTING FOR SEISMIC-RESISTING SYSTEMS

1. Perform special inspections and testing for seismic-resisting systems and components in accordance with Division 1 Inspection & Testing Requirements. Verify that the required system and component tests for seismically isolated structures have been done in accordance with CBC requirements and comply with all acceptance provisions contained therein.

END OF SECTION

SECTION 13400

PROCESS INSTRUMENTATION

PART 1 GENERAL

1.1 DESCRIPTION

A. This Section includes the supply and installation of water process instrumentation devices and related equipment. The work also includes installation of City-furnished chlorine analyzers.

1.2 SECTION INCLUDES

A. Level transmitters

B. Level switches

C. Limit switch assemblies

D. Pressure Transmitters

E. Magnetic flowmeters

F. Turbidimeters

G. Chlorine Analyzers

1.3 REFERENCES - CODES AND STANDARDS

A. NECA (National Electrical Contractors Association) Standard of Installation

B. NEMA ICS 1 (National Electrical Manufacturers Association) - Industrial Control and Systems: General Requirements.

C. NEMA ICS 2 (National Electrical Manufacturers Association) - Industrial Control Devices, Controllers and Assemblies.

D. NEMA ICS 4 (National Electrical Manufacturers Association) - Industrial Control and Systems: Terminal Blocks.

E. NEMA ICS 5 (National Electrical Manufacturers Association) - Industrial Control and Systems: Control Circuit and Pilot Devices.

F. NEMA ICS 6 (National Electrical Manufacturers Association) - Industrial Control and Systems: Enclosures.

1.4 SYSTEM DESCRIPTION

A. Contractor shall provide and install all power and control devices, sensor elements, transmitters, switches, power and control wiring, as indicated on the drawings.

B. Contractor shall also provide all raceways, conduit, wiring, panel mounting framework and hardware, power circuits, and all appurtenances for monitoring, controlling and alarming of the various functions, for a complete operating system.

C. Contractor shall provide all raceways, conduits, and wiring between field devices, control panel or cable termination cabinets, and terminate the control and instrumentation cables on suitable termination blocks at the equipment or device and the termination cabinet.

1.5 SUBMITTALS

A. Shop Drawings: Comply with NEMA ICS 1 and submit control panel layouts, point-to-point wiring diagrams, interconnection wiring diagrams, dimensions, and support points, layout of completed assemblies, dimensions, weights, and external power requirements.

B. Schematics: Provide complete elementary and schematic wiring diagrams with wires and terminal block numbered for all control systems. Show all internal and external devices and equipment, control panel devices, etc., in detail on the elementary diagram with all terminal points of such devices and equipment indicated.

C. Product Data:
1. Submit catalog data for each component being furnished showing control characteristics and connection requirements including supply voltage, frequency, electrical load, accuracy, and description of operation, operating instructions, and calibration procedure.
2. For measuring instruments and devices, submit completed ISA S20 forms for each device including physical dimensions manufacturer’s recommended upstream and downstream straight piping lengths, recommended location of any pressure taps and estimates of pressure losses through the device.

D. Installation Method: The proposed method of mounting sensors and instruments shall accompany all shop drawings.

E. Parts List: Submit a Parts List with current net prices and a list of recommended spares. Test Reports: Indicate procedures and results for field calibration and functionality test results of each assembly and component.

F. Coordinate and identify all interconnection wiring between motor control panel, field devices, control panels and other devices. Identification tag designations for each wire shall match those shown on the wiring diagrams.

G. Factory Testing and Calibration: All measuring devices and meters shall be factory tested. Provide a certification of calibration from an independent test laboratory. Calibration curves based on factory and/or laboratory testing (see option below) shall be provided for the Engineer's review. Furnish calibration curves in units of output (inches or rpm / gpm) versus measured flow. Upon receipt of the Engineer's review, Contractor may release the meter(s) for shipment to the job site.
   1. As an option to laboratory testing each meter, the calibration curves of six (6) "like devices" may be substituted provided the calibration data is available from at least one identical device (pipe size, flow range, and type plus accessories such as extension registers).

H. O&M Manuals: Furnish manufacturer's installation, lubrication, operation and maintenance manuals, bulletins, and spare parts lists.

I. Affidavits: Furnish affidavits from the manufacturers stating that the meters have been properly installed and tested and each is ready for full time operation.

1.6 CLOSEOUT SUBMITTALS

A. Project Record Documents: Include interconnection wire and cabling information.

B. Operation and Maintenance Date: Submit bound copies of O&M manuals for each device, including instructions for adjustments, calibration and preventative maintenance.

1.7 QUALIFICATIONS

A. Manufacturer: Company specializing in manufacturing products specified in this section with minimum three (3) years experience.

1.8 COORDINATION

A. Coordinate work with installation of systems being controlled.

PART 2 PRODUCTS

2.1 LEVEL TRANSMITTER

A. Manufacturer:
   1. Druck PTX 1290
   2. Or approved equivalent.

B. Product Description: Submersible pressure transmitter calibrated to read fluid column pressure in feet of submergence. Vented polyurethane cable with Kevlar strain relief. IP68 rating to 2,000 ft of submergence.

C. Sensing element:
   1. Titanium body, resistant to corrosive and hazardous chemicals.
   2. Flush, PTFE coated elastomeric sensing diaphragm.

3. Micro-machined, piezoresistive sensing element.

D. Measurement Range: 0-49 feet of water column.

E. Measurement Accuracy: plus or minus 0.25 percent full scale.

F. Operating Temperature: minus 20 to plus 60 degrees C.

G. Electrical Characteristics:
1. Loop powered (2-wire).
2. Supply Voltage: 9 to 28V DC.
3. Current Output: 4-20mA.

H. Accessories: Druck STE 110 Sensor Termination Enclosure.
1. NEMA 4X enclosure specifically designed for field termination of pressure sensors.
2. Made from PVC with halogen-free, self-extinguishing polycarbonate cover plate.
3. Two (2) integral strain relief cable glands capable of supporting manufacturer's cable with diameter of 0.23 to 0.39 inch.
4. 2-inch pipe mounting kit manufactured from zinc-plated mild steel.
5. Field-replaceable desiccant module with externally visible and desiccant status indicator.

2.2 FLOAT AND LEVEL SWITCHES

A. Manufacturers:
1. Anchor Scientific - Type SE
2. Flygt - ENM-10
3. Approved equal

B. General Description:
1. Mercury-free float-type switch, with either an internal magnetic or mechanical switching action
2. All wetted parts of float shall be constructed from non-corrodible material, hermetically sealed and suitable for Class I, Division 1 hazardous environment.
3. Sensing unit housing must be acceptable for mounting in a Class I, Div. 1 hazardous location.
4. Operate in environment temperatures from –15 to +250 degrees Fahrenheit (-25 to 120°C).
5. Output switch shall be capable of conducting a minimum of 5-Amp of current at 120-VAC.
6. Switch contacts shall be form A or B, as required.

2.3 LIMIT SWITCH ASSEMBLIES

A. Manufacturers:
1. CLA-VAL X105LCW
2. Or approved equal

2.4 PRESSURE TRANSMITTERS

A. Manufacturers:
1. Rosemount 3051CD
2. Or approved equal

B. General Description:
1. Pressure transmitter with gage pressure measurement, range -14.2 to 300 psi, 4-20 mA output, stainless steel flange and drain, stainless steel mounting bracket, LCD display with local operator interface, transient protection terminal block, and high & low level alarms.
2. Certifications: Calibration, material traceability, quality certification for safety, hydrostatic pressure testing.
3. NSF and FM approved.

2.5 MAGNETIC FLOWMETERS

A. Manufacturers:
1. Rosemount 8705, with 8712 remote transmitter
2. Or approved equal

B. General Description:
1. Flanged flowtube sensor and remote mount transmitter. Neoprene liner, carbon steel flange, two measurement electrodes and grounding as required, stainless steel junction box, 316 stainless steel grounding rings. Meter shall be grounded per manufacturer’s recommendations.
2. NSF and FM approved.

2.6 TURBIDIMETERS

A. Manufacturers:
1. Hach Instruments 1720E, with sc200 controller
2. Or approved equal

B. General Description:
1. Meets or exceeds USEPA Method 180.1 for measuring turbidity for drinking water compliance. One controller accepts up to two plug and play sensors giving two complete turbidimeters. Built-in bubble removal system. Built-in datalogger stores up to 6 months of data. Versatile digital output-MODBUS.

2.7 CHLORINE ANALYZERS

A. Manufacturer:
1. Analytical Technology, Inc. model Q46H/62-63.

B. General Description:
1. The chlorine analyzer uses a polarographic membraned sensor to measure chlorine directly, without the need for chemical reagents. The transmitter has a LCD display and the chlorine sensor is a flowcell system. Digital communication is available for Profibus, Modbus, or

Ethernet. The system provides three 4-20A outputs: temperature, pH, and chlorine. Power options include 90-260 VAC or 12-24 VDC.

2. The chlorine analyzers will be furnished by the City.

PART 3 EXECUTION

3.1 INSTALLATION

A. Install in accordance with NECA “Standard of Installation” and manufacturer’s instructions.

B. Install enclosures and boxes plumb. Anchor securely to wall and structural supports at each corner.

C. Install individual control devices and relays in enclosures.

D. Make electrical wiring interconnections.

E. Install engraved plastic nameplates.

F. Provide grounding and bonding of devices.

3.2 CITY FURNISHED MATERIALS

A. City furnished materials will be stored at a designated City facility for the Contractor to pick up and deliver to the site. Contractor shall be responsible for storage and protection of City furnished material until final acceptance of the work by the City.

B. Contractor shall install material according to manufacturer’s recommendations.

C. Contractor's responsibility for City furnished products:
   1. Inspecting products jointly with City and recording shortages, damaged or defective items.
   2. Submitting notification of discrepancies or anticipated problems.
   3. Handling products at site.
   4. Installing and all necessary supervision, labor, materials, supplies and equipment for complete installation, including assembly, connections, adjustments, tests, and finish products in accordance with Contract Documents.
   5. Providing operating oils, lubricants, and incidental materials required for complete installation.

3.3 ADJUSTING

A. Each device shall be factory calibrated over its operating range.

B. Each device shall be field tested, adjusted and tuned to operate with the process loop. Field test results shall be recorded and submitted to the Owner for their records.

3.4 FIELD TESTING

A. All flow devices shall be field tested against a secondary standard at the normal (or expected) process flow rates.

B. The Contractor may select, at his option, to either install a second flow device of known calibration in the line to verify flow device calibration or perform fluid capacity tests such as volumetric measurement per unit time.

END OF SECTION

THIS PAGE
WAS INTENTIONALLY
LEFT BLANK

SECTION 15050

COMMON WORK RESULTS FOR PLUMBING

PART 1 GENERAL

1.1 SUMMARY

A. Section Includes:
   1. Identification for Plumbing Piping and Equipment.
   2. Sleeves.
   3. Mechanical sleeve seals.
   4. Formed steel channel.

1.2 SUBMITTALS

A. Shop Drawings: Submit for piping and equipment identification list of wording, symbols, letter size, and color coding for pipe identification and valve chart and schedule, including valve tag number, location, function, and valve manufacturer's name and model number.

B. Product Data for Pipe and Equipment Identification: Submit for mechanical identification manufacturers catalog literature for each product required.

PART 2 PRODUCTS

2.1 IDENTIFICATION FOR PLUMBING PIPING AND EQUIPMENT

A. Plastic Nameplates: Laminated three-layer plastic with engraved black letters on light background color.

B. Plastic Tags: Laminated three-layer plastic with engraved black letters on light background color, minimum 1-1/2 inches diameter.

C. Plastic Pipe Markers: Factory fabricated, flexible, semi-rigid plastic, preformed to fit around pipe or pipe covering. Larger sizes may have maximum sheet size with spring fastener. Color and Lettering: Conform to ASME A13.1.

D. Plastic Tape Pipe Markers: Flexible, vinyl film tape with pressure sensitive adhesive backing and printed markings. Color and Lettering: Conform to ASME A13.1.

E. Plastic Underground Pipe Markers: Bright colored continuously printed plastic ribbon tape, minimum 6 inches wide by 4-mil thick, manufactured for direct burial service.

2.2 SLEEVES

A. Sleeves for Pipes through Non-fire Rated Floors: 18 gage thick galvanized steel.

B. Sleeves for Pipes through Non-fire Rated Beams, Walls, Footings, and Potentially Wet Floors: Steel pipe or 18 gage thick galvanized steel.

C. Sealant: Acrylic

2.3 MECHANICAL SLEEVE SEALS

A. Product Description: Modular mechanical type, consisting of interlocking synthetic rubber links shaped to continuously fill annular space between object and sleeve, connected with bolts and pressure plates causing rubber sealing elements to expand when tightened, providing watertight seal and electrical insulation.

2.4 FORMED STEEL CHANNEL

A. Product Description: Galvanized 12 gage thick steel. With holes 1-1/2 inches on center.

PART 3 EXECUTION

3.1 EXAMINATION

A. Verify openings are ready to receive sleeves.

3.2 INSTALLATION - PIPING AND EQUIPMENT IDENTIFICATION

A. Install plastic nameplates with adhesive.

B. Install plastic tags with corrosion resistant metal chain.

3.3 INSTALLATION - SLEEVES

A. Exterior watertight entries: Seal with mechanical sleeve seals.

B. Set sleeves in position in forms. Provide reinforcing around sleeves.

C. Size sleeves large enough to allow for movement due to expansion and contraction. Provide for continuous insulation wrapping.

D. Extend sleeves through floors 1 inch above finished floor level. Caulk sleeves.

E. Where piping or ductwork penetrates floor, ceiling, or wall, close off space between pipe or duct and adjacent work with stuffing insulation and caulk airtight. Provide close fitting metal collar or escutcheon covers at both sides of penetration.

F. Install stainless steel escutcheons at finished surfaces.

END OF SECTION

SECTION 15051

COMMON WORK RESULTS FOR HVAC

PART 1 GENERAL

1.1 SUMMARY

A. Section Includes:
   1. Identification for HVAC Equipment.
   2. Sleeves.
   3. Mechanical sleeve seals.
   4. Formed steel channel.

1.2 SUBMITTALS

A. Shop Drawings: Submit for piping and equipment identification list of wording, symbols, letter size, and color coding for pipe identification and valve chart and schedule, including valve tag number, location, function, and valve manufacturer's name and model number.

B. Product Data for Pipe and Equipment Identification: Submit for mechanical identification manufacturers catalog literature for each product required.

PART 2 PRODUCTS

2.1 IDENTIFICATION FOR HVAC PIPING AND EQUIPMENT

A. Plastic Nameplates: Laminated three-layer plastic with engraved black letters on light background color.

B. Plastic Tags: Laminated three-layer plastic with engraved black letters on light background color, minimum 1-1/2 inches diameter.

C. Plastic Pipe Markers: Factory fabricated, flexible, semi-rigid plastic, preformed to fit around pipe or pipe covering. Larger sizes may have maximum sheet size with spring fastener. Color and Lettering: Conform to ASME A13.1.

D. Plastic Tape Pipe Markers: Flexible, vinyl film tape with pressure sensitive adhesive backing and printed markings. Color and Lettering: Conform to ASME A13.1.

E. Plastic Underground Pipe Markers: Bright colored continuously printed plastic ribbon tape, minimum 6 inches wide by 4-mil thick, manufactured for direct burial service.

2.2 SLEEVES

A. Sleeves for Pipes through Non-fire Rated Beams, Walls, Footings, and Potentially Wet Floors: Steel pipe or 18 gage thick galvanized steel.

B. Sleeves for Round Ductwork: Galvanized steel.

C. Sleeves for Rectangular Ductwork: Galvanized steel or wood.

D. Sealant: Acrylic

2.3 MECHANICAL SLEEVE SEALS

A. Product Description: Modular mechanical type, consisting of interlocking synthetic rubber links shaped to continuously fill annular space between object and sleeve, connected with bolts and pressure plates causing rubber sealing elements to expand when tightened, providing watertight seal and electrical insulation.

2.4 FORMED STEEL CHANNEL

A. Product Description: Galvanized 12 gage thick steel. With holes 1-1/2 inches on center.

PART 3 EXECUTION

3.1 EXAMINATION

A. Verify openings are ready to receive sleeves.

3.2 INSTALLATION - PIPING AND EQUIPMENT IDENTIFICATION

A. Install plastic nameplates with adhesive.

B. Install plastic tags with corrosion resistant metal chain.

3.3 INSTALLATION - SLEEVES

A. Exterior watertight entries: Seal with mechanical sleeve seals.

B. Set sleeves in position in forms. Provide reinforcing around sleeves.

C. Size sleeves large enough to allow for movement due to expansion and contraction. Provide for continuous insulation wrapping.

D. Extend sleeves through floors 1 inch above finished floor level. Caulk sleeves.

E. Where piping or ductwork penetrates floor, ceiling, or wall, close off space between pipe or duct and adjacent work with stuffing insulation and caulk airtight. Provide close fitting metal collar or escutcheon covers at both sides of penetration.

F. Install stainless steel escutcheons at finished surfaces.

END OF SECTION

SECTION 15057

PIPE MATERIALS 2-INCHES AND SMALLER

PART 1 GENERAL

1.1 DESCRIPTION

A. This section includes materials and installation of site water utility piping 2-inches in diameter and smaller, copper tubing, backflow prevention assemblies, service saddles, corporation stops, ball valves, brass and bronze pipe fittings and appurtenances.

1.2 REFERENCES

A. American National Standards Institute (ANSI) standards, most recent editions:
   1. ANSI B1.1 - Unified Inch Screw Threads
   2. ANSI B1.2 - Gages and Gaging for Unified Inch Screw Threads
   3. ANSI B1.20.1 - Pipe Threads, General Purpose (Inch)

B. American Society for Testing and Materials (ASTM) standards, most recent editions:
   1. ASTM A 126 - Specification for Gray Iron Castings for Valves, Flanges, and Pipe Fittings
   2. ASTM A 536 - Specification for Ductile Iron Castings
   3. ASTM B 43 - Seamless Red Brass Pipe, Standard Sizes
   4. ASTM B 584 - Specification for Copper Alloy Sand Castings for General Applications
   5. ASTM B 61 - Specification for Steam or Valve Bronze Castings
   6. ASTM B 62 - Composition Bronze or Ounce Metal Castings
   7. ASTM B 88M - Seamless Copper Water Tube [Metric]

C. American Water Works Association (AWWA) standards, most recent editions:
   1. AWWA C510 - Double Check Valve Backflow-Prevention Assembly
   2. AWWA C511 - Reduced-Pressure Principle Backflow-Prevention Assembly
   3. AWWA M14 - Recommended Practice for Backflow Prevention and Cross-Connection Control
   4. AWWA M23 - PVC Pipe Design and Installation
   5. AWWA Publication - Cross-Connection and Backflow Prevention

D. CAPH - State of California Department of Public Health, most recent editions:
   1. Division of Drinking Water and Environmental Management, Approved Backflow Prevention Assemblies for Service Isolation

E. NSF - National Sanitation Foundation

1.3 RELATED WORK SPECIFIED ELSEWHERE

A. 02019 – Earthwork

B. 02062 – Furnishing and Installing Pipe

C. 02071 – Water Mains and Services

D. 02071SP – Water Mains and Services

1.4 SERVICE SADDLES

All connections to new ductile-iron pipelines for services and other appurtenances sized 50mm (2”) or smaller require the installation of service saddles.

1.5 WARNING/IDENTIFICATION TAPE

Warning/Identification Tape in accordance with Section 02071 shall be used for all pipes 2-inches in diameter and smaller, except that which is bored or jacked.

1.6 SUBMITTALS

A. Shop drawings: In accordance with the provisions of Section 01330 of these Specifications, submit complete shop drawings including layouts, elevations and details.

B. Material list: In accordance with the provisions of Section 01330 of the Specifications, submit with the shop drawings a complete list of all materials and equipment proposed to be furnished and installed under this portion of the work, giving manufacturer's name, catalog number, dimensions, manufacturing standards, product data, specifications, and catalog cuts for each item where applicable.

C. Manufacturer's recommendations: Accompanying the materials list and shop drawings, submit copies of the manufacturers' current recommended method of installation.

D. Installation procedures including field adjustments as required.

1.7 PRODUCT HANDLING

A. Use all means necessary to protect the materials of this Section before, during, and after installation and to protect the installed work and materials of all other trades.

B. The Contractor shall provide and use proper implements, tools and facilities for the safe and proper handling and protection of the material.

C. In the event of damage, immediately make all repairs and replacements necessary to the approval of the City and at no additional cost to the City.

D. When damaged material cannot be repaired to the satisfaction of the City, it shall be removed from the job.

E. Material shall be stored in a safe location, protected from the elements where damage therefrom could result.

PART 2 MATERIALS

2.1 PVC PIPE

A. PVC pipe shall be ASTM D1785, Schedule 40, with threaded ends. Solvent-weld shall not be used without prior approval from City.

2.2 COPPER TUBING

A. Copper tubing shall conform to the requirements of ASTM B88 Type K or ASTM B88 M (Metric) Type A seamless copper water tube. Copper tubing shall be soft, rolled tubing.

B. Manufacturers:
1. Mueller
2. Cerro
3. Halstead
4. Lee
5. Phelps-Dodge
6. Or approved equal

2.3 BACKFLOW PREVENTION ASSEMBLIES

A. Backflow prevention assemblies shall be among those listed on the list of “Approved Backflow Prevention Assemblies for Service Isolation" as issued by the State of California Department of Health Services, Division of Drinking Water and Environmental Management.

B. The assembly shall include same size valves located on either side of the backflow prevention assemblies. Four test cocks shall be appropriately located on the assembly for testing and certification.

C. Manufacturers:
1. Wilkins 975XL (no lead)
2. Or approved equal

2.4 CORPORATION STOPS

A. Corporation stops shall be the ball type with a bronze body and T-Head operator. Valve ends shall be compatible with the piping system in which they are being installed or as called for on the Approved Plans or indicated on the Standard Drawings. Corporation stops shall be rated for a minimum pressure of 1,379 KPa (200 psi).

B. Manufacturers:
1. Ford
2. Mueller
3. Or approved equal

2.5 BALL VALVES

A. Ball valves 50mm (2”) and smaller shall be of bronze construction conforming to ASTM B62 and equipped with a T-Head or lever handle operator as required. Valve ends shall be compatible with the piping system in which they are being installed or as indicated on the Approved Plans or Standard Drawings. Ball valves shall be rated for a minimum pressure of 1,379 KPa (200 psi).

B. Manufacturers:
1. Ford
2. Jones
3. Mueller
4. Nibco
5. Watts
6. Or approved equal

2.6 BRASS PIPE, NIPPLES, AND FITTINGS

A. Brass pipe, nipples, and fittings shall conform to ASTM B 43, regular wall thickness. Threads shall conform to ANSI B1.20.1.

2.7 BRONZE APPURTENANCES

A. All bronze appurtenances specified herein shall conform to ASTM B 62.

B. Bronze appurtenances shall be threaded or compression-type in accordance with the Standard Drawings.

2.8 SERVICE SADDLES

A. Service saddles shall be compatible with the size and type of pipe receiving the saddle in accordance with the manufacturer's recommendations. Saddles shall be cast brass ASTM B62 body with bronze straps, iron-pipe or AWWA CC Tap outlet sizes.

B. Manufacturers:
1. Ford 101B or 202BS
2. Mueller BRIB
3. Or approved equal

2.9 WARNING/IDENTIFICATION TAPE

A. Warning/Identification Tape materials shall be in accordance with Section 02071.

PART 3 EXECUTION

3.1 PIPE, TUBING, AND FITTINGS

A. Trenching, bedding, backfilling and compacting shall be performed in accordance with Section 02019 and the Standard Drawings. Provide a minimum cover of 750mm (30") below finished grade.

B. Cut tubing true and square and remove burrs.

C. Copper tubing shall be installed perpendicular to water mains. Curves in copper tubing are not allowed. Vertical bends shall be in accordance with the Standard Drawings. Shape vertical bends with shaping tools and form bends without flattening, buckling, or thinning the tubing wall at any point.

D. Assemble copper tubing and fittings per the manufacturer's recommendations.

3.2 SERVICE SADDLES

A. Notify the City at least 48 hours in advance before tapping into an existing main or installing a service saddle.

B. Service saddles shall be located a minimum of 600mm (24") from any pipe joint, fitting, or other service saddle(s).

C. Multiple service saddles installed on the same side of a single pipe spool shall be alternated at 10° and 30° above horizontal to prevent a weak plane in the pipe.

D. Prior to installation of service saddles, the surface of the pipe shall be cleaned to remove all dirt and debris.

E. Service saddles shall be tightened in accordance with the manufacturer's recommendations to ensure a tight seal, using care to prevent damage or distortion of the service saddle or corporation stop due to over-tightening.

F. Pipe taps shall be made in accordance with the pipe manufacturer's recommendations.

G. Tapping tools and shell cutters with internal teeth or double slots that will retain the coupon shall be used.

3.3 VALVES

A. Valves shall be set in true alignment straddling the centerline of pipe with the valve operator in the vertical position unless otherwise noted on the Approved Plans or shown on the Standard Drawings.

B. Valves shall be installed in accordance with the manufacturer's recommendations and the applicable section of these specifications for the piping material and joint type being used.

C. Aboveground valves shall be rigidly held in place using supports and hangers in accordance with the Approved Plans and Standard Drawings. The stem orientation of valves in elevated piping shall be as approved by the City Engineer for accessibility, except that no valves shall be installed with stems aligned below horizontal. Saddle type valve supports shall be provided. Supports shall be of rugged construction providing at least one hundred twenty degrees (120°) under support for the valve body. Valve supports shall be constructed of steel, and shall be anchored to the foundations using stainless steel anchor bolts.

3.4 BACKFLOW PREVENTERS

A. Installation shall comply with the latest edition of the California Plumbing Code, applicable local agency and City requirements.

B. Backflow prevention assemblies shall be installed in accordance with the Standard Drawings.

C. Water service and fire service shut-off valves will be secured closed during installation until an approved backflow prevention device is installed and tested in compliance with this specification.

D. When static pressure exceeds 1.03MPa (150psi), when recommended by the backflow device manufacturer, or when required by the City Engineer, a pressure-reducing valve shall be installed as shown on the Standard Drawings.

3.5 CONCRETE

A. Concrete thrust or anchor blocks and slabs shall be installed in accordance with Section 03300 and the Standard Drawings. Refer to Section 03300 for the minimum

concrete curing time required.

3.6 WARNING/IDENTIFICATION TAPE

A. Install warning/identification tape in accordance with Section 02071 and the Standard Drawings.

3.7 DISINFECTION AND BACTERIOLOGICAL TESTING

A. Disinfection, bacteriological testing, and flushing shall be performed in accordance with Section 02071.

B. Disinfection and flushing of Backflow preventers shall be performed in accordance with Section 02071, as part of the process of disinfecting the main pipeline. The backflow assemblies shall be operated during the disinfection period to completely disinfect all internal parts.

3.8 HYDROSTATIC TESTING

A. Field hydrostatic testing shall be performed in accordance with Section 02071.

B. Backflow assemblies shall not be hydrostatically tested as part of or in conjunction with the pipeline to which they are connected.

3.9 TESTING

A. Backflow assemblies shall be tested and certified by a City-approved backflow tester after installation inspection by the City is complete.

END OF SECTION

SECTION 15081

HVAC INSULATION

PART 1 GENERAL

1.1 SUMMARY

A. Section Includes:
1. HVAC piping insulation, jackets and accessories.

1.2 SUBMITTALS

A. Product Data: Submit product description, thermal characteristics and list of materials and thickness for each service, and location.

B. Manufacturer's Installation Instructions: Submit manufacturers published literature indicating proper installation procedures.

C. Manufacturer's Certificate: Certify products meet or exceed specified requirements.

1.3 QUALITY ASSURANCE

A. Pipe insulation manufactured in accordance with ASTM C585 for inner and outer diameters.

B. Factory fabricated fitting covers manufactured in accordance with ASTM C450.

1.4 DELIVERY, STORAGE, AND HANDLING

A. Accept materials on site in original factory packaging, labeled with manufacturer's identification, including product density and thickness.

B. Protect insulation from weather and construction traffic, dirt, water, chemical, and damage, by storing in original wrapping.

1.5 ENVIRONMENTAL REQUIREMENTS

A. Install insulation only when ambient temperature and humidity conditions are within range recommended by manufacturer.

B. Maintain temperature before, during, and after installation for minimum period of 24 hours.

PART 2 PRODUCTS

2.1 PIPE INSULATION

A. TYPE P-5: ASTM C534, Type I, flexible, closed cell elastomeric insulation, tubular.
1. Thermal Conductivity: 0.27 at 75 degrees F.
2. Operating Temperature Range: Range: Minus 70 to 180 degrees F.

2.2 PIPE INSULATION JACKETS

A. Vapor Retarder Jacket:
   1. ASTM C921, white Kraft paper with glass fiber yarn, bonded to aluminized film.
   2. Water vapor transmission: ASTM E96/E96M; 0.02 perm-inches.

B. Aluminum Pipe Jacket:
   1. ASTM B209
   2. Thickness: 0.020 inch thick sheet.
   3. Finish: Smooth or Embossed
   4. Joining: Longitudinal slip joints and 2 inch laps.
   5. Fittings: 0.016 inch thick die shaped fitting covers with factory attached protective liner.
   6. Metal Jacket Bands: 3/8 inch wide; 0.015 inch thick aluminum.
   7. Indoor Vapor Retarder Finish:
      a. Cloth: Untreated; 9 oz./sq. yd. weight.
      b. Vinyl emulsion type acrylic, compatible with insulation, black color.

2.3 EXHAUST SYSTEM INSULATION

A. Type E-9 Exhaust System Insulation:
   1. Manufacturers for exhaust system insulation products:
      a. Temptec
      b. Substitutions: Permitted
   2. Mil-I-24244 and ASTM E84, Type “E” glass fibers, noncombustible, asbestos-free over a 304 Stainless Steel Knitted Mesh constructed of 0.008 inch wire with maximum temperature rating of 1500 degrees F.
      a. Thermal Conductivity: 0.40 at 300 degrees F.
      b. Service Temperature: 1200 degrees F maximum; 1000 degrees F continuous
      c. Density: 2 pound per cubic foot.
      d. Integral Jacket: Silicone Impregnated Type “E” Fiberglass Fabric Equipment Jacket: UL listed, 32 oz/sq yd, Service Temperature: 500 degrees F maximum; -80 degrees F minimum, Weave: 8 Harness Satin
      e. Tie Wire: Kevlar thread, 35 lb breaking strength, maximum temperature 800 degrees F.

2.4 PIPE INSULATION ACCESSORIES

A. Vapor Retarder Lap Adhesive: Compatible with insulation.

B. Covering Adhesive Mastic: Compatible with insulation.

C. Piping 1-1/2 inches diameter and smaller: Galvanized steel insulation protection shield. MSS SP-69, Type 40. Length: Based on pipe size and insulation thickness.

D. Closed Cell Elastomeric Insulation Pipe Hanger: Polyurethane insert with aluminum single piece construction with self-adhesive closure. Thickness to match pipe insulation.

PART 3 EXECUTION

3.1 EXAMINATION

A. Verify piping has been tested before applying insulation materials.

B. Verify surfaces are clean and dry, with foreign material removed.

3.2 INSTALLATION - PIPING SYSTEMS

A. Piping Exposed to View in Finished Spaces: Locate insulation and cover seams in least visible locations.

B. Continue insulation through penetrations of building assemblies or portions of assemblies having fire resistance rating of one hour or less. Provide intumescent fire-stopping when continuing insulation through assembly. Finish at supports, protrusions, and interruptions.

C. Piping Systems Conveying Fluids Below Ambient Temperature:
1. Insulate entire system including fittings, valves, unions, flanges, strainers, flexible connections, and expansion joints.
2. Furnish factory-applied or field-applied vapor retarder jackets. Secure factory-applied jackets with pressure sensitive adhesive self-sealing longitudinal laps and butt strips. Secure field-applied jackets with outward clinch expanding staples and seal staple penetrations with vapor retarder mastic.
3. Insulate fittings, joints, and valves with molded insulation of like material and thickness as adjacent pipe. Finish with glass cloth and vapor retarder adhesive or PVC fitting covers.

D. Inserts and Shields:
1. Piping 1-1/2 inches Diameter and Smaller: Install galvanized steel shield between pipe hanger and insulation.

E. Insulation Terminating Points:
1. Condensate Piping: Insulate entire piping system and components to prevent condensation.

F. Closed Cell Elastomeric Insulation:
1. Push insulation on to piping.
2. Miter joints at elbows.
3. Seal seams and butt joints with manufacturer’s recommended adhesive.
4. When application requires multiple layers, apply with joints staggered.
5. Insulate fittings and valves with insulation of like material and thickness as adjacent pipe.

G. Pipe Exposed in Mechanical Equipment Rooms or Finished Spaces: Finish with aluminum jacket.

H. Piping Exterior to Building: Provide vapor retarder jacket. Insulate fittings, joints, and valves with insulation of like material and thickness as adjoining pipe, and finish with glass mesh reinforced vapor retarder cement. Cover with aluminum jacket with seams located at 3 or 9 o’clock position on side of horizontal piping with overlap facing down to shed water or on bottom side of horizontal piping.

I. Exhaust pipe and muffler:

a. Exposed Equipment: Locate insulation and cover seams in least visible locations.
b. Fill joints, cracks, seams, and depressions with bedding compound to form smooth surface. On cold equipment, use vapor retarder cement.
c. Equipment Requiring Access for Maintenance, Repair, or Cleaning: Install insulation and jacket for easy removal and replacement without damage

3.3 SCHEDULES

A. Cooling Services Piping Insulation Schedule:

PIPING SYSTEM	INSULATION TYPE	PIPE SIZE	INSULATION THICKNESS inches
Condensate Piping from Cooling Coils	P-5	All sizes	0.5
Refrigerant Suction	P-5	All sizes	0.5
Refrigerant Hot Gas	P-5	All sizes	0.5
Generator Exhaust Piping	E-9	All sizes	2.0
Generator Exhaust Muffler	E-9	All sizes	2.0

END OF SECTION

SECTION 15100

WATER UTILITY FITTINGS AND APPURTENANCES

PART 1 GENERAL

1.1 DESCRIPTION

A. Work included: This Section includes the supply and installation of valves, fittings and related equipment for site water distribution that is not otherwise specified in Section 02071 – Water Mains and Services or 02071SP – Water Mains and Services Special Provisions. These items are generally not included in typical domestic water distribution.

B. Related work described elsewhere:
   1. Section 02071 – Water Mains and Services
   2. Section 02071SP – Water Mains and Services Special Provisions

1.2 SECTION INCLUDES

A. Flanged coupling adapters

B. Dismantling joints

C. Mechanical-joint tapping sleeves

D. Cutting-in sleeves

E. Flexible-expansion joints

F. Valve conversion kits

G. Solenoid control valves

H. Ductile-iron-pipe spools

I. Brass and bronze components

J. Bolts, gaskets, glands, nuts

1.3 REFERENCES

The materials and work performed in this Section shall conform to the applicable standards (latest version) of:

A. ANSI - The American National Standards Institute

B. ASTM - The American Society for Testing and Materials

C. AWWA - American Water Works Association

D. NSF – National Sanitation Foundation

E. MSS - Manufacturers Standardization Society

1.4 QUALITY ASSURANCE

A. Qualifications of manufacturers:
   1. The material shall be the product of a supplier regularly engaged in the manufacturing of pipe and plumbing products.
   2. All materials shall be new and of current manufacture and shall be guaranteed against defects of workmanship in accordance with the General Conditions.

B. Qualification of installers:
   1. For the actual assembly, installation, and testing of the Work of this Section, uses only thoroughly trained and experienced personnel who are completely familiar with the requirements for this Work and with the installation recommendations of the manufacturers of the specified items.
   2. In acceptance or rejection of installed materials, no allowance will be made for lack of skill on the part of installers.

1.5 SUBMITTALS

A. Shop drawings: In accordance with the provisions of Section 01330 of these Specifications, submit complete shop drawings including layouts, elevations and details.

B. Material list: In accordance with the provisions of Section 01330 of the Specifications, submit with the shop drawings a complete list of all materials and equipment proposed to be furnished and installed under this portion of the work, giving manufacturer's name, catalog number, dimensions, manufacturing standards, product data, specifications, and catalog cuts for each item where applicable.

C. Manufacturer's recommendations: Accompanying the materials list and shop drawings, submit copies of the manufacturers' current recommended method of installation.

1.6 PRODUCT HANDLING

A. Use all means necessary to protect the materials of this Section before, during, and after installation and to protect the installed work and materials of all other trades.

B. The Contractor shall provide and use proper implements, tools and facilities for the safe and proper handling and protection of the material.

C. In the event of damage, immediately make all repairs and replacements necessary to the approval of the City and at no additional cost to the City.

D. When damaged material cannot be repaired to the satisfaction of the City, it shall be removed from the job.

E. Material shall be stored in a safe location, protected from the elements where damage therefrom could result.

PART 2 PRODUCTS

2.1 GENERAL

A. All materials shall conform to sizes, capacity, quality and quantities as shown on the drawings or described in these Specifications. Materials shall be from new stock, delivered in good condition, no damaged stock shall be used.

B. Where no method of tests for materials is specified, the latest test specified by ASTM shall be followed.

C. After delivery to the site, all materials shall be carefully unloaded, protected against breakage, rusting, and accumulation of foreign matter, disintegration and injury. The Contractor shall be responsible for all lost or damaged material supplied and work done under this contract.

2.2 FLANGED COUPLING ADAPTERS

A. Flanged coupling adapters shall have ASTM A536 ductile-iron flange bodies, with flanges complying with ANSI Class 125 and 150 bolt circles.

B. Manufacturers:
1. Dresser
2. Ford FFCA style
3. ROMAC Industries Inc., FC series
4. Smith-Blair 912 or 913
5. Or approved equal

2.3 DISMANTLING JOINTS

A. Manufacturers:
1. Viking Johnson
2. ROMAC Industries Inc.
3. Dresser 131
4. Or approved equal

2.4 MECHANICAL-JOINT TAPPING SLEEVES

A. Ductile-iron properties shall be in accordance with ASTM A536 and AWWA C153. Coatings shall comply with NSF-61, NSF-372, and AWWA C104. Tapping sleeve shall comply with MSS SP-111.

B. Manufacturers:
1. Mueller
2. Tyler-Union Waterworks
3. Or approved equal

2.5 CUTTING-IN SLEEVES

A. Cutting-in sleeves shall be ductile-iron. Flanges shall comply with AWWA C110. Mechanical joint ends shall comply with AWWA C111 and shall be designed to receive oversize gray or ductile iron pipe. Provide ductile iron retainer glands to restrain the mechanical joint ends.

B. Manufacturers:
   1. Mueller
   2. Tyler-Union Waterworks
   3. Or approved equal

2.6 FLEXIBLE-EXPANSION JOINTS

A. Flexible expansion joints shall consist of an expansion joint designed and cast as an integral part of a ball and socket type flexible joint, having a minimum per ball deflection of: 15º for sizes 14” and larger. The flexible expansion fitting shall not expand or exert an axial imparting thrust under internal water pressure. The flexible expansion fitting shall not increase or decrease the internal water volume as the unit expands or contracts.

B. Flexible expansion joints shall be force-balanced, have flanged ends, and shall be epoxy coated inside and outside.

C. Offset capability shall be 18.6-inches, including 5-inches minimum for expansion/contraction.

D. Manufacturers:
   1. EBAA-IRON 4418F20B
   2. Or approved equal

2.7 VALVE CONVERSION KITS

A. Automatic control valve conversion kits shall be provided to replace the existing valve pilot-control systems as directed by the plans and specifications.

B. Manufacturers:
   1. CLA-VAL
   2. Or approved equal

2.8 SOLENOID CONTROL VALVES

A. Solenoid control valves shall be CLA-VAL 136-01, or approved equal.

B. Valve shall be pressure class 400, threaded end connections, epoxy coated inside and outside, ASTM B62 bronze body.

C. Solenoid enclosure shall be NEMA 4 (watertight).

2.9 DUCTILE-IRON-PIPE SPOOLS

A. Ductile-iron-pipe spools shall have the same lining, coating, and pressure rating as the adjoining pipe. Spools shall be provided in accordance with the same ANSI and AWWA standards as ductile-iron-pipe as specified in Section 02071. Joints and flanges shall be the same bolt pattern and have the same pressure rating as the adjoining joints.

B. Ductile-iron-pipe spools may be epoxy lined and coated, subject to prior approval from the City. Epoxy coating shall be provided in accordance with 2.14 EPOXY COATINGS of Section 02071 – Water Mains and Services.

C. Manufacturers:
   1. US Pipe

2. Tyler-Union
3. Or approved equal

2.10 BRASS AND BRONZE COMPONENTS

A. Brass and bronze components of valves and appurtenances that have surfaces in contact with the water shall be alloys containing less than 16 percent zinc and 2 percent aluminum.

B. Approved alloys are ASTM B61, B62, B98 (alloy A, B, or D), B139 (alloy A), B143 (alloy 1-B), B164, B194, B292 (alloy A), and B127.

C. Stainless steel alloy 18-8 may be substituted for bronze at the option of the manufacturer and with the approval of the City.

2.11 BOLTS, GASKETS, GLANDS, NUTS

A. Use type-316 stainless steel bolts, nuts, and washers for all bolted connections. Bolts shall be Type 316 stainless steel, Class 2, conforming to ASTM A193 for bolts and ASTM A194 for nuts. All rubber gaskets and rings shall be ethylene-propylene-diene -monomer (EPDM). Gaskets for flanged connections shall be suitable for the pressure, temperature, and chemical characteristics of the fluid handled. Flange gaskets shall be full-face rubber.

PART 3 EXECUTION

3.1 SURFACE CONDITIONS

A. Inspection:
1. Prior to all work of this Section, carefully inspect the installed work of all other trades and verify that all such work is complete to the point where this installation may properly commence.
2. Verify that all materials may be installed in accordance with all pertinent codes and regulations, the original design, and the referenced standards.

B. Discrepancies:
1. In the event of discrepancy, immediately notify the Engineer.
2. Do not proceed with installation in area of discrepancy until all such discrepancies have been fully resolved.

3.2 INSTALLATION

A. General: Install all materials in strict accordance with the manufacturer's recommendations as approved by the Engineer.

B. Before installation, carefully clean valves and fittings of all foreign material, adjust stuffing boxes, and inspect valves in open and closed positions. Install valves in accordance with the applicable portions of these Specifications. Unless otherwise indicated, install valves with the stem vertical. Mount horizontal valves in such a manner that adequate clearance is provided for operation. Installation practices shall conform to manufacturer's recommendations.

C. Prior to installing flanged valves or fittings, the flange faces shall be thoroughly cleaned. After cleaning, insert the gasket and tighten the nuts progressively and uniformly. If

flanges leak under pressure, loosen the nuts, reseat or replace the gasket, retighten the nuts, and retest the joint. Joints must be watertight at test pressures before acceptance.

D. Thoroughly clean threads of screwed joints by wire brushing, swabbing, or other approved method. Apply approved joint compound to threads prior to making joint. Joints shall be watertight at test pressures before acceptance.

E. Anchor bolts: Anchor bolts shall be used for floor stands, stem guides, etc., and shall be cast in place during concrete placement. Threads shall be protected and shall be cleaned before the nuts are attached and tightened.

F. Buried valves shall have a loose polyethylene encasement.

3.3 TESTS

A. General: Upon completion of this portion of the Work, and prior to it acceptance by the City, make all required tests and secure all required approvals from agencies having jurisdiction.

B. Testing: Valves and fittings and related materials will be tested at the same time that the adjacent pipeline is tested. Joints shall show no visible leakage under test. Repair joints that show signs of leakage prior to final acceptance. If there are any special parts of control systems or operators that might be damaged by the pipeline test, they shall be properly protected. The Contractor will be held responsible for any damage caused by the testing.

3.4 INSTRUCTIONS

A. Instruction of City's personnel shall be in accordance with Division 1.

END OF SECTION

SECTION 15101

PLUMBING PIPING

PART 1 GENERAL

1.1 SUMMARY

A. Section Includes:
   1. Pipe hangers and supports.
   2. Pipe and pipe fittings.
   3. Valves.
   4. Piping specialties.
   5. Plumbing drainage specialties.
   6. Plumbing supply specialties.

1.2 SUBMITTALS

A. Product Data:
   1. Pipe Hangers and Supports: Submit manufacturers catalog data including load carrying capacity.
   2. Valves: Submit manufacturers catalog information with valve data and ratings for each service.
   3. Plumbing drainage specialties: Submit manufacturers catalog information with sizes, capacities, rough-in requirements, service sizes, and finishes.
   4. Plumbing supply specialties: Submit manufacturers catalog information with sizes, capacities, rough-in requirements, service sizes, and finishes.

B. Pipe Hangers and Supports: Design data, indicate pipe sizes, load carrying capacity of trapeze, multiple pipe, and riser support hangers.

C. Manufacturer's Installation Instructions: Submit installation instructions for material and equipment.

D. Manufacturer's Certificate: Certify products meet or exceed specified requirements.

1.3 CLOSEOUT SUBMITTALS

A. Operation and Maintenance Data: Submit spare parts lists and maintenance procedures.

PART 2 PRODUCTS

2.1 PIPE HANGERS AND SUPPORTS

A. Conform to ASME B31.9.

B. Hangers for Pipe Sizes 1/2 to 1-1/2 inch: Malleable iron, adjustable swivel, split ring.

C. Hangers for Pipe Sizes 2 inches and Over: Carbon steel, adjustable, clevis.

D. Multiple or Trapeze Hangers: Steel channels with welded spacers and hanger rods.

E. Wall Support for Pipe Sizes to 3 inches: Cast iron hook.

F. Vertical Support: Steel riser clamp.

G. Floor Support for Cold Pipe: Cast iron adjustable pipe saddle, lock nut, nipple, floor flange, and concrete pier or steel support.

H. Copper Pipe Support: Copper-plated, carbon-steel adjustable, ring.

2.2 PIPES AND TUBES

A. Sanitary Sewer Piping, Buried Within 5 Feet of Building and Sanitary Sewer Piping, above Grade:
   1. Cast Iron Pipe: CISPI 301, hubless, service weight, with neoprene gaskets and stainless steel clamps.

B. Water Piping, Buried Within 5 Feet of Building:
   1. Copper Tubing: ASTM B42, Tempered O61 annealed without fittings.
   2. Ductile Iron Pipe: AWWA C151 with ductile iron fittings rubber gasket joints and 3/4 inch diameter rods.

C. Water Piping, above Grade:
   1. Copper Tubing: ASTM B88, Type **L,** drawn, with cast brass or wrought copper fittings and Grade 95TA solder joints.

D. Storm Water Piping, Buried Within 5 Feet of Building and Storm Water Piping, above Grade:
   1. Cast Iron Pipe: CISPI 301, hubless, service weight with neoprene gaskets and stainless steel clamps.

2.3 VALVES

A. Ball Valves:
   1. Up to 2 inches: Bronze or stainless steel one piece body, chrome plated brass ball, teflon seats and stuffing box ring, lever handle, solder or threaded ends.

2.4 PIPING SPECIALTIES

A. Flanges, Unions, and Couplings:
   1. Pipe Size 2 inches and Under: Malleable iron unions for threaded ferrous piping; bronze unions for copper pipe, soldered joints.
   2. Dielectric Connections: Union with galvanized or plated steel threaded end, copper solder end, water impervious isolation barrier.

2.5 PLUMBING DRAINAGE SPECIALTIES

A. Floor Drains:
   1. Floor Drain (FD-1): Lacquered cast iron two piece body with double drainage flange, weep holes, **reversible clamping collar,** with removable perforated sediment bucket, trap primer connection and adjustable **round** strainer.

B. Cleanouts:
   1. Finished Floor: Lacquered cast iron body with anchor flange, reversible clamping collar, and adjustable nickel-bronze round scored cover in service areas and **round** depressed cover to accept floor finish in finished floor areas.

2. Line type with lacquered cast iron body and round epoxy coated gasketed cover, and round stainless steel access cover secured with machine screw.

2.6 PLUMBING SUPPLY SPECIALTIES

A. Backflow Preventers:
1. Reduced Pressure Backflow Preventers: ASSE 1013; bronze body with bronze internal parts and stainless steel springs; two independently operating, spring loaded check valves; pressure relief valve located between check valves; third check valve opens under back pressure in case of diaphragm failure; non-threaded vent outlet; assembled with two gate valves, strainer, and four test cocks.

PART 3 EXECUTION

3.1 EXAMINATION

A. Verify excavations are to required grade, dry, and not over-excavate.

3.2 PREPARATION

A. Ream pipe and tube ends. Remove burrs. Bevel plain end ferrous pipe.

B. Remove scale and dirt, on inside and outside piping before assembly.

C. Prepare piping connections to equipment with flanges or unions.

3.3 INSTALLATION - INSERTS

A. Install inserts for placement in concrete forms.

B. Install inserts for suspending hangers from reinforced concrete slabs and sides of reinforced concrete beams.

C. Provide hooked rod to concrete reinforcement section for inserts carrying pipe over 4 inches.

D. Where concrete slabs form finished ceiling, locate inserts flush with slab surface.

E. Where inserts are omitted, drill through concrete slab from below and provide through-bolt with recessed square steel plate and nut recessed into and grouted flush with slab.

3.4 INSTALLATION - PIPING SYSTEMS

A. Install dielectric connections wherever jointing dissimilar metals.

B. Install unions downstream of valves and at equipment or apparatus connections.

C. Route piping parallel to building structure and maintain gradient.

D. Install piping to maintain headroom. Group piping to conserve space. Group piping whenever practical at common elevations.

E. Install piping to allow for expansion and contraction without stressing pipe, joints, or connected equipment.

F. Provide clearance in hangers and from structure and other equipment for installation of insulation and access to valves and fittings.

G. Sleeve pipe passing through partitions, walls and floors.

H. Install piping system allowing clearance for installation of insulation and access to valves and fittings.

I. Install identification on piping systems including underground piping. Refer to Section 15050.

J. Protect piping systems from entry of foreign materials by temporary covers, completing sections of the work, and isolating parts of completed system.

3.5 INSTALLATION - VALVES

A. Install valves with stems upright or horizontal, not inverted.

B. Install ball valves for shut-off and to isolate equipment, part of systems, or vertical risers.

C. Install 3/4 inch ball drain valves at all equipment.

3.6 INSTALLATION - PLUMBING SUPPLY PIPING

A. Install water piping in accordance with ASME B31.9.

B. Excavate and backfill in accordance with Division 2.

C. Establish elevations of buried piping outside the building to obtain not less than 2 ft. of cover.

D. Provide support for utility meters in accordance with requirements of utility companies.

E. Slope water piping and arrange to drain at low points.

3.7 INSTALLATION - PLUMBING DRAINAGE PIPING

A. Extend cleanouts to finished floor or wall surface. Lubricate threaded cleanout plugs with mixture of graphite and linseed oil. Install with clearance at cleanout for rodding of drainage system.

B. Encase exterior cleanouts in concrete flush with grade.

C. Install floor cleanouts at elevation to accommodate finished floor.

D. Establish elevations of buried piping outside building to provide not less than 2 ft. of cover.

E. Establish invert elevations, slopes for drainage to 1/4 inch per foot minimum. Maintain gradients.

F. Test drainage piping in accordance with local code requirements.

3.8 INSTALLATION - PIPE HANGERS AND SUPPORTS

A. Support horizontal piping as scheduled.

B. Install hangers with minimum 1/2 inch space between finished covering and adjacent work.

C. Place hangers within 12 inches of each horizontal elbow.

D. Use hangers with 1-1/2 inch minimum vertical adjustment.

E. Support horizontal cast iron pipe adjacent to each hub, with 5 feet maximum spacing between hangers.

F. Where piping is installed in parallel and at same elevation, provide multiple pipe or trapeze hangers.

G. Support riser piping independently of connected horizontal piping.

H. Provide copper plated hangers and supports for copper piping.

I. Design hangers for pipe movement without disengagement of supported pipe.

J. Prime coat exposed steel hangers and supports. Hangers and supports located in crawl spaces, pipe shafts, and suspended ceiling spaces are not considered exposed.

3.9 DISINFECTION OF DOMESTIC WATER PIPING SYSTEM

A. Prior to starting work, verify system is complete, flushed and clean. Verify pH of water to be treated is between 7.4 and 7.6 by adding alkali (caustic soda or soda ash) or acid (hydrochloric).

B. Inject disinfectant, free chlorine in liquid, powder, tablet or gas form, throughout system to obtain 50 to 80 mg/L residual. Bleed water from outlets to accomplish distribution.

C. Maintain disinfectant in system for 24 hours. When final disinfectant residual tests less than 25 mg/L, repeat treatment.

D. Flush disinfectant from system. Take samples no sooner than 24 hours after flushing, and analyze in accordance with AWWA C601.

3.10 SCHEDULES

A. Pipe Hanger Spacing:

PIPE MATERIAL	MAXIMUM HANGER SPACING Feet	HANGER ROD DIAMETER Inches
Cast Iron (All Sizes)	5	5/8
Cast Iron (All Sizes) with 10 foot length of pipe	10	5/8
Copper Tube, 1-1/4 inches and smaller	6	1/2
Copper Tube, 1-1/2 inches and larger	10	1/2
Steel, 3 inches and smaller	12	1/2
Steel, 4 inches and larger	12	5/8

END OF SECTION

THIS PAGE
WAS INTENTIONALLY
LEFT BLANK

15119

ELECTRIC MOTOR ACTUATORS

PART 1 GENERAL

1.1 SUMMARY

A. Provide valves in accordance with Drawings and Specifications.
   1. Valves and component parts: Equal or exceed specified requirements.
   2. Manufacture: Normally engaged in manufacture of such valves.
   3. Valves furnished for Work: New and currently under manufacture.
   4. Valves discontinued by manufacturer as of bid opening date: Not acceptable.

B. Section includes:
   1. Electric motor operators for butterfly valves

1.2 REFERENCES

A. American National Standards Institute (ANSI) standards, most recent editions:
   1. ANSI B16.1 - Cast Iron Pipe Flanges and Flanged Fittings.
   2. ANSI B93.10. – Static Pressure Rating Methods of Square Head Fluid Power Cylinders.
   3. NSF/ANSI 61 – Drinking Water System Components-Health Effects.

B. American Society for Testing and Materials (ASTM) standards, most recent editions:
   1. ASTM A48 – Standard Specification for Gray Iron Castings.
   2. ASTM A126 – Standard Specification for Gray Iron Castings for Valves, Flanges and Pipe Fittings.
   3. ASTM A240 - Standard Specification for Heat-Resisting Chromium and Chromium-Nickel Stainless Steel Plate, Sheet, and Strip for Pressure Vessels.
   4. ASTM A536 – Standard Specification for Ductile Iron Castings.

C. American Water Works Association (AWWA) standards, most recent editions:
   1. AWWA C504 – Rubber Seated Butterfly Valves.
   2. AWWA C550 - Protective Epoxy Interior Coatings for Valves and Hydrants.

1.3 DESIGN REQUIREMENTS

A. Meet or exceed the requirements of AWWA C504, NSF/ANSI 61, and the requirements of these specifications.

1.4 SUBMITTALS

A. Submit shop drawings in accordance with Section 01330 – Submittal Procedures, including layouts, elevations and details.

B. Submit shop drawings with valve operator in position and orientation as shown on Drawings.

C. Submit calculations for valve torque requirements for butterfly valve operators.

D. Material list: submit all materials and equipment proposed to be furnished and installed under this portion of the work, giving manufacturer's name, catalog number, dimensions,

manufacturing standards, product data, specifications, and catalog cuts for each item where applicable.

E. Installation, Operations, and Maintenance: submit copies of the manufacturers' installation, and operations & maintenance manuals.

1.5 QUALITY ASSURANCE

A. Provide records of tests performed on valves or component parts thereof that are required by AWWA Valve Standard specified in these Specifications if requested by Engineer within one year period after acceptance of Work.

B. Provide Affidavit of Compliance with specified AWWA Valve Standard or Section 1.4 of AWWA C550 for each lot of valve size furnished for Work.

C. Install and test valves furnished in conformance with Drawings and Specifications.

PART 2 PRODUCTS

2.1 Electric Motor Operators:

A. Manufacturers
1. Limitorque, MX Series.
2. Rotork,
3. Or approved equal.

B. All electric motor actuators shall conform to the latest requirements of AWWA Standard C540.

C. Actuators shall contain motor, gearing, manual over-ride, limit switches, torque switches, drive coupling, integral motor controls, position feedback transmitter (where required) and mechanical dial position indicator (where required).

D. The motor shall be specifically designed for actuator service. The motor will be of the induction type with class F insulation and protected by means of thermal switches imbedded in the motor windings. Motor enclosure will be totally enclosed, non-ventilated. Motors will be capable of operating on 460 volt - 3 phase - 60 hertz power except quarter-turn valves 16 inches and smaller which shall operate on 120 volt - single phase- 60 hertz power.

E. Actuator enclosure shall be NEMA 4 (watertight). All external fasteners on the electric actuator will be stainless steel. Fasteners on limit switch and terminal compartments shall be captured to prevent loss while covers are removed.

F. All gearing shall be grease lubricated and designed to withstand the full stall torque of the motor.

G. Manual over-ride shall be by handwheel. Manual operation will be via power gearing to minimize required rim pull and to facilitate easy change-over from motor to manual operation when actuator is under load. Return from manual to electric mode of operation will be automatic upon motor operation. A seized or inoperable motor shall not prevent manual operation.

H. Limit switches shall be furnished at each end of travel. Limit switch adjustment shall not be altered by manual operation. Limit switch drive shall be by counter-gear. Limit switches must be capable of quick adjustment requiring no more than five (5) turns of the limit switch adjustment spindle. One set of normally open and one set of normally closed contacts will be furnished at each end of travel where indicated. Contacts shall be of silver and capable of reliably switching low voltage DC source from the control system furnished by others.

I. Mechanically operated torque switches shall be furnished at each end of travel. Torque switches will trip when the valve load exceeds the torque switch setting. The torque switch adjustment device must be calibrated directly in engineering units of torque.

J. All wiring shall be terminated at a plug and socket connector.

K. Quarter-turn actuators will be furnished with mechanical stops that restrict the valve/actuator travel.

L. Actuator must be capable of the following valve closing times/operating speeds: quarter-turn valves - 60 second closing time.

M. Actuators will be capable of operating in an ambient temperature range of -20 to +175 degrees F (without motor controls) and -20 to +160 degrees F (with motor controls).

N. All actuators in open/close service will be furnished with integral motor controls consisting of reversing starters, control transformer, phase discriminator, monitor relay (to signal fault conditions such as thermal switch trip, torque switch tripped in mid-travel, wrong phase sequence or phase failure), "open-stop-close" pushbuttons, "local-off- remote" selector switch in addition to red and green indicating lights. An interface with the control system must be furnished with optical isolators to separate incoming voltage signals from the internal motor controls.

PART 3 EXECUTION

3.1 INSTALLATION

A. Contractor shall install all equipment in strict conformance with manufacturer’s installation instructions. Notify City of all discrepancies between manufacturer’s instructions and information presented in the Contract Documents.

B. After installation and checking, run each gate through at least two (2) successful full cycles from closed position to fully open and back to closed position witnessed by THE CITY.

C. Manufacturer’s field service technician shall verify proper installation, inspection, certification of proper installation, equipment testing, and start-up assistance.

END OF SECTION

THIS PAGE
WAS INTENTIONALLY
LEFT BLANK

SECTION 15180

HEATING AND COOLING PIPING

PART 1 GENERAL

1.1 SUMMARY

A. Section Includes:
   1. Pipe hangers and supports.
   2. Pipe and pipe fittings.
   3. Valves.
   4. Piping specialties.
   5. HVAC piping specialties.

1.2 SUBMITTALS

A. Shop Drawings: Indicate schematic layout of refrigeration system, including equipment, critical dimensions, and sizes.

B. Product Data:
   1. Pipe Hangers and Supports: Submit manufacturers catalog data including load carrying capacity.
   2. Valves: Submit Manufacturers catalog information with valve data and ratings for each service.
   3. Piping Specialties: Submit product description, model, dimensions, component sizes, rough-in requirements, service sizes, and finishes. Submit schedule indicating manufacturer, model number, size, location, rated capacity, load served, and features for each specialty.
   4. Pipe Expansion Products: Indicate maximum temperature and pressure rating, and maximum expansion compensation.

C. Manufacturer's Installation Instructions: Submit installation instructions for material and equipment accessories.

D. Manufacturer's Certificate: Certify products meet or exceed specified requirements.

1.3 CLOSEOUT SUBMITTALS

A. Operation and Maintenance Data: Submit spare parts lists and maintenance procedures.

PART 2 PRODUCTS

2.1 PIPE HANGERS AND SUPPORTS

A. Conform to ASME B31.1.

B. Hangers for Pipe Sizes 1/2 to 1-1/2 inch: Malleable iron, adjustable swivel, split ring.

C. Hangers for Cold Pipe Sizes 2 inches and Over: Carbon steel, adjustable, clevis.

D. Wall Support for Pipe Sizes to 3 inches: Cast iron hooks.

E. Copper Pipe Support: Copper-plated, carbon steel ring.

2.2 PIPES AND TUBES

A. Refrigerant Piping:
1. Copper Tubing: ASTM B280, drawn, wrought copper fittings, silver/phosphorus/copper alloy brazed joints.

B. Equipment Drains and Overflows:
1. Copper Tubing: ASTM B88, Type L**,** drawn, cast brass, wrought copper fittings, lead free solder joints.

PART 3 EXECUTION

3.1 EXAMINATION

A. Verify excavations are to required grade, dry, and not over-excavate.

3.2 PREPARATION

A. Ream pipe and tube ends. Remove burrs.

B. Remove scale and dirt, on inside and outside piping before assembly.

C. Prepare piping connections to equipment with flanges or unions.

3.3 INSTALLATION - PIPING SYSTEMS

A. Route piping parallel to building structure and maintain gradient.

B. Install piping to maintain headroom. Group piping to conserve space. Group piping whenever practical at common elevations.

C. Install piping to allow for expansion and contraction without stressing pipe, joints, or connected equipment.

D. Provide clearance in hangers and from structure and other equipment for installation of insulation and access to valves and fittings.

E. Sleeve pipe passing through partitions, walls and floors.

F. Install piping system allowing clearance for installation of insulation and access to valves and fittings.

G. Protect piping systems from entry of foreign materials by temporary covers, completing sections of the work, and isolating parts of completed system.

3.4 INSTALLATION - REFRIGERANT PIPING

A. Install refrigerant piping in accordance with ASME B31.5.

B. Arrange refrigeration piping to return oil to compressor. Provide traps and loops in piping, and provide double risers as required. Slope horizontal piping 0.40 percent in direction of flow.

C. Flood refrigerant piping system with nitrogen when brazing.

D. Follow ASHRAE 15 procedures for charging and purging of systems and for disposal of refrigerant.

E. Provide replaceable cartridge filter-dryers, with isolation valves and bypass with valve.

F. Locate expansion valve sensing bulb immediately downstream of evaporator on suction line.

G. Provide external equalizer piping on expansion valves with refrigerant distributor connected to evaporator.

H. Install flexible connectors at right angles to axial movement of compressor, parallel to crankshaft.

I. Fully charge completed system with refrigerant after testing.

J. Provide electrical connection to solenoid valves.

K. Test refrigeration system in accordance with ASME B31.5.

L. Pressure test system with dry nitrogen to 200 psig. Test to no leakage.

3.5 INSTALLATION - PIPE HANGERS AND SUPPORTS

A. Support horizontal piping as scheduled.

B. Install hangers with minimum 1/2 inch space between finished covering and adjacent work.

C. Place hangers within 12 inches of each horizontal elbow.

D. Use hangers with 1-1/2 inch minimum vertical adjustment.

E. Where piping is installed in parallel and at same elevation, provide multiple pipe or trapeze hangers.

F. Support riser piping independently of connected horizontal piping.

G. Provide copper plated hangers and supports for copper piping.

H. Design hangers for pipe movement without disengagement of supported pipe.

I. Prime coat exposed steel hangers and supports. Hangers and supports located in crawl spaces, pipe shafts, and suspended ceiling spaces are not considered exposed.

3.6 SCHEDULES

A. Copper and Steel Pipe Hanger Spacing:

PIPE SIZE Inches	COPPER TUBING MAXIMUM HANGER SPACING Feet	COPPER TUBING HANGER ROD DIAMETER Inches
1/2	5	3/8

PIPE SIZE Inches	COPPER TUBING MAXIMUM HANGER SPACING Feet	COPPER TUBING HANGER ROD DIAMETER Inches
3/4	5	3/8
1	6	3/8

END OF SECTION

SECTION 15410

PLUMBING FIXTURES

PART 1 GENERAL

1.1 SUMMARY

A. Section Includes:
1. Emergency Combination Shower with Eye and Face Wash.

1.2 REFERENCES

A. American National Standards Institute:
1. ANSI A117.1 - Accessible and Usable Buildings and Facilities.
2. ANSI Z358.1 - Emergency Eyewash and Shower Equipment.

1.3 SUBMITTALS

A. Division 1: Submittal procedures.

B. Product Data: Submit catalog illustrations of fixtures, sizes, rough-in dimensions**,** utility sizes, trim, and finishes.

C. Manufacturer's Installation Instructions: Submit installation methods and procedures.

D. Manufacturer's Certificate: Certify products meet or exceed specified requirements.

1.4 CLOSEOUT SUBMITTALS

A. Division 1: Closeout procedures.

B. Operation and Maintenance Data: Submit fixture, trim, exploded view and replacement parts lists.

1.5 QUALITY ASSURANCE

A. Electrical Components, Devices, and Accessories: Listed and labeled as defined in NFPA 70, by a qualified testing agency, and marked for intended location and application.

B. ANSI Standard: Comply with ANSI Z358.1, "Emergency Eyewash and Shower Equipment."

C. NSF Standard: Comply with NSF 61, "Drinking Water System Components - Health Effects," for fixture materials that will be in contact with potable water.

1.6 QUALIFICATIONS

A. Manufacturer: Company specializing in manufacturing products specified in this section with minimum three years' experience.

1.7 DELIVERY, STORAGE, AND HANDLING

A. Division 1: Product storage and handling requirements.

B. Accept fixtures on site in factory packaging. Inspect for damage.

C. Protect installed fixtures from damage by securing areas and by leaving factory packaging in place to protect fixtures and prevent use.

1.8 WARRANTY

A. Division 1: Product warranties and product bonds.

B. Furnish five year manufacturer warranty for plumbing fixtures.

1.9 EXTRA MATERIALS

A. Division 1: Spare parts and maintenance products.

PART 2 PRODUCTS

2.1 EMERGENCY COMBINATION SHOWER WITH EYE AND FACE WASH

A. Shower: ANSI Z358.1; free standing, self-cleaning, non-clogging 8 inch diameter stainless steel deluge shower head, instant action stay open valve actuated by rigid stainless steel pull rod.

B. Eyewash: ANSI Z358.1; stainless steel bowl with elbow, 1-1/4 inch galvanized steel pipe pedestal with floor flange, instant action stay open valve actuated by push flag and foot pedal, twin spray heads, dust cover assembly, and tailpiece and chrome plated brass P-trap.

C. Supply and Waste Piping: 1-1/4 inch galvanized steel pipe pedestal with floor flange.

D. Thermostatic tempering valve - Rated for emergency shower and eyewash water flow. Lead free construction with mixed water temperature factory set at 85 degrees F (adjustable).

E. Furnish universal emergency sign.

PART 3 EXECUTION

3.1 EXAMINATION

A. Division 1: Coordination and project conditions.

B. Verify walls and floor finishes are prepared and ready for installation of fixtures.

C. Verify electric power is available and of correct characteristics.

3.2 PREPARATION

A. Rough-in fixture piping connections in accordance with minimum sizes indicated in fixture rough-in schedule for particular fixtures.

3.3 INSTALLATION

A. Install components level and plumb.

B. Install and secure fixtures in place with bolts.

C. Seal fixtures to floor surfaces with sealant, color to match fixture.

3.4 INTERFACE WITH OTHER PRODUCTS

A. Review millwork shop-drawings. Confirm location and size of fixtures and openings before rough in and installation.

3.5 CLEANING

A. Division 1: Final cleaning.

B. Clean plumbing fixtures and equipment.

3.6 PROTECTION OF INSTALLED CONSTRUCTION

A. Division 1: Protecting installed construction.

B. Do not permit use of fixtures before final acceptance.

3.7 SCHEDULES

1. Emergency Eye and Face Wash: Standard: 38 inches to receptor rim.
2. Emergency Shower: Standard: 84 inches to bottom of head.

END OF SECTION

THIS PAGE
WAS INTENTIONALLY
LEFT BLANK

SECTION 15739

SPLIT SYSTEM AIR CONDITIONERS

PART 1 GENERAL

1.1 SUMMARY

A. Section Includes:
1. Air handling unit.
2. Condensing unit.

1.2 SUBMITTALS

A. Product Data: Submit data indicating:
1. Cooling capacities.
2. Dimensions.
3. Weights.
4. Rough-in connections and connection requirements.
5. Duct connections.
6. Electrical requirements with electrical characteristics and connection requirements.
7. Controls.
8. Accessories.

B. Manufacturer's Installation Instructions: Submit assembly, support details, connection requirements, and include start-up instructions.

1.3 CLOSEOUT SUBMITTALS

A. Project Record Documents: Record actual locations of controls installed remotely from units.

B. Operation and Maintenance Data: Submit manufacturer's descriptive literature, operating instructions, installation instructions, and maintenance and repair data.

1.4 QUALITY ASSURANCE

A. Performance Requirements: Energy Efficiency Rating (EER) not less than prescribed by ASHRAE 90.1 when used in combination with compressors and evaporator coils when tested in accordance with ARI 210/240.

B. Cooling Capacity: Rate in accordance with ARI 210/240.

C. Sound Rating: Measure in accordance with ARI 270.

D. Insulation and adhesives: Meet requirements of NFPA 90A.

1.5 WARRANTY

A. Furnish five year manufacturer’s warranty for compressors.

1.6 MAINTENANCE SERVICE

A. Furnish service and maintenance of equipment for one year from Date of Substantial Completion. Include maintenance items as shown in manufacturer's operating and

maintenance data, including filter replacements, fan belt replacement, and controls checkout and adjustments.

B. Furnish 24-hour emergency service on breakdowns and malfunctions for this maintenance period. Furnish capability of response time within 4 hours.

PART 2 PRODUCTS

2.1 SPLIT SYSTEM AIR CONDITIONING UNIT

A. Product Description: Split system consisting of air handling unit and condensing unit including cabinet, evaporator fan, refrigerant cooling coil, compressor, refrigeration circuit, condenser, air filters, controls, air handling unit accessories, condensing unit accessories, and refrigeration specialties.

2.2 CONDENSING UNIT

A. General: Factory assembled and tested air cooled condensing units, consisting of casing, compressors, condensers, coils, condenser fans and motors, and unit controls.

B. Unit Casings: Exposed casing surfaces constructed of galvanized steel with manufacturer's standard baked enamel finish. Designed for outdoor installation and complete with weather protection for components and controls, and complete with removable panels for required access to compressors, controls, condenser fans, motors, and drives.

C. Compressor: Single refrigeration circuit with rotary, hermetic or semi-hermetic reciprocating type compressors, resiliently mounted, with positive lubrication, and internal motor overload protection.

D. Condenser Coil: Constructed of copper tubing mechanically bonded to aluminum fins, factory leak and pressure tested.

E. Controls: Furnish operating and safety controls including high and low pressure cutouts. Control transformer. Furnish magnetic contactors for compressor and condenser fan motors.

F. Condenser Fans and Drives: Direct drive propeller fans statically and dynamically balanced. Wired to operate with compressor. Permanently lubricated ball bearing type motors with built-in thermal overload protection.

G. Condensing Unit Accessories: Furnish the following accessories:
   1. Controls to provide low ambient cooling to 0 degrees F.
   2. Time delay relay.
   3. Anti-short cycle timer.
   4. Disconnect switch.
   5. Vibration isolators.
   6. Coil with corrosion resistant coating.
   7. Condenser Coil Guard: Condenser fan openings furnished with PVC coated steel wire safety guards.
   8. Suction and discharge pressure gauges.

H. Refrigeration specialties: Furnish the following:
   1. Charge of compressor oil.
   2. Holding charge of refrigerant.
   3. Replaceable core type filter drier.

4. Liquid line sight glass and moisture indicator.
5. Shut-off valves on suction and liquid piping.
6. Liquid line solenoid valve.
7. Charging valve.
8. Oil level sight glass.
9. Crankcase heater.
10. Hot gas muffler.
11. Pressure relief device.

I. Refrigerant: Furnish charge of refrigerant.

2.3 CONTROLS

A. Thermostat: 7 day programmable electronic space thermostat with single stage cooling with automatic changeover and cooling setup capability. Furnish system selector switch off- auto-cool and fan control switch, auto-on. Wall mounted.

2.4 ELECTRICAL CHARACTERISTICS AND COMPONENTS

A. Disconnect Switch: Factory mounted, non-fused type, interlocked with access door, accessible from outside unit, with power lockout capability.

PART 3 EXECUTION

3.1 EXAMINATION

A. Verify mounting for condensing unit is ready for unit installation.

3.2 INSTALLATION - AIR HANDLING UNIT

A. Install condensate piping with trap and route from drain pan to daylight.

B. Install components furnished loose for field mounting.

C. Install connection to electrical power wiring.

3.3 INSTALLATION - CONDENSING UNIT

A. Install condensing units on vibration isolators.

B. Install refrigerant piping from unit to condensing unit. Install refrigerant specialties furnished with unit.

C. Evacuate refrigerant piping and install initial charge of refrigerant.

D. Install electrical devices furnished loose for field mounting.

E. Install control wiring between air handling unit, condensing unit, and field installed accessories.

F. Install connection to electrical power wiring in accordance with Division 16.

3.4 MANUFACTURER'S FIELD SERVICES

A. Furnish initial start-up and shutdown during first year of operation, including routine servicing and checkout.

3.5 CLEANING

A. Vacuum clean coils and inside of unit cabinet.

3.6 DEMONSTRATION

A. Demonstrate unit operation and maintenance.

B. Demonstrate starting, maintenance, and operation of condensing unit including low ambient temperature operation.

C. Furnish services of manufacturer's technical representative to instruct Owner's personnel in operation and maintenance of units. Schedule training with Owner, provide at least 7 day notice to Owner of training date.

3.7 PROTECTION OF FINISHED WORK

A. Do not operate air handling units until filters are in place, bearings lubricated, and fan has been test run under observation.

END OF SECTION

SECTION 15800

HVAC AIR DISTRIBUTION

PART 1 GENERAL

1.1 SUMMARY

A. Section Includes:
   1. Ductwork.
   2. Ductwork accessories.
   3. Fans.

1.2 SUBMITTALS

A. Shop Drawings: Submit duct fabrication drawings, drawn to scale not smaller than 1/8-inch equals 1 foot, on drawing sheets same size as Contract Documents, indicating:
   1. Fabrication, assembly, and installation details, including plans, elevations, sections, details of components, and attachments to other work.
   2. Duct layout, indicating pressure classifications and sizes in plan view. For exhaust duct systems, indicate classification of materials handled as defined in this section.
   3. Fittings.
   4. Reinforcing details and spacing.
   5. Seam and joint construction details.
   6. Penetrations through fire rated and other walls.
   7. Terminal unit, coil, and humidifier installations.
   8. Hangers and supports, including methods for building attachment, vibration isolation, and duct attachment.

B. Product Data:
   1. Submit sizes, capacities, materials, controls and connections to other work.
   2. Submit catalog performance ratings, construction, electric and duct connections, flashing and dimensions for fans and exhausters.

C. Operation and Maintenance Data: Submit instructions for lubrication, motor and drive replacement, spare parts lists, and wiring diagrams.

D. Field Quality Control Reports

E. Manufacturer's Installation Instructions: Submit relevant instructions.

1.3 CLOSEOUT SUBMITTALS

A. Operation and Maintenance Data: Submit instructions for filter replacement, spare parts lists, and wiring diagrams.

PART 2 PRODUCTS

2.1 DUCTWORK

A. Duct Materials:
   1. Galvanized Steel Ducts: ASTM A653/A653M galvanized steel sheet, lock-forming quality, having G60 F2.10 oz.

2. Steel Ducts: ASTM A1008.
3. Fasteners: Rivets, bolts, or sheet metal screws.
4. Hanger Rod: ASTM A36/A36M; steel; threaded both ends, threaded one end, or continuously threaded.

B. Ductwork Fabrication:
1. Fabricate and support rectangular ducts in accordance with SMACNA HVAC Duct Construction Standards - Metal and Flexible. Provide duct material, gages, reinforcing, and sealing for operating pressures indicated.
2. Construct T's, bends, and elbows with minimum radius 1-1/2 times centerline duct width. Where not possible and where rectangular elbows are used, provide turning vanes. Where acoustical lining is indicated, furnish turning vanes of perforated metal with glass fiber insulation.
3. Increase duct sizes gradually, not exceeding 15 degrees divergence wherever possible; maximum 30 degrees divergence upstream of equipment and 45 degrees convergence downstream.
4. Seal joints between duct sections and duct seams with welds, gaskets, mastic adhesives, mastic plus embedded fabric systems, or tape.
a. Sealants, Mastics and Tapes: Conform to UL 181A. Provide products bearing appropriate UL 181A markings.
b. Do not provide sealing products not bearing UL approval markings.

2.2 DUCT ACCESSORIES

A. Flexible Duct Connections:
1. UL listed fire-retardant neoprene coated woven glass fiber fabric to NFPA 90A, approximately 3 inches wide, crimped into metal edging strip.

B. Back-draft Dampers:
1. Gravity back-draft dampers size 18 x 18 inches or smaller, furnished with air moving equipment, furnish of air moving equipment manufacturers standard construction.
2. Fabricate multi-blade, parallel action gravity balanced back-draft dampers of galvanized steel, or extruded aluminum, with center pivoted blades, with sealed edges, linked together, steel ball bearings, and plated steel pivot pin.

2.3 FANS

A. Downblast Centrifugal Roof Fans:
1. Fan Unit: Downblast type. Direct drive, with spun aluminum housing; resilient mounted motor; aluminum wire bird screen; square base to suit roof curb with continuous curb gaskets.
2. Motor: Open drip proof.
3. Roof Curb: Self-flashing of galvanized steel construction with continuously welded seams, built-in cant strips, 1 inch insulation and curb bottom, and factory installed nailer strip.
4. Disconnect Switch: Factory wired, non-fusible, in fan housing for thermal overload protected motor, NEMA 250 Type 4 enclosure.
5. Backdraft Damper: Gravity actuated, aluminum multiple blade construction, felt edged with offset hinge pin, nylon bearings, blades linked.
6. Accessories:
a. Fan speed controller.

2.4 ELECTRICAL CHARACTERISTICS AND COMPONENTS

A. Disconnect Switch: Factory mount on equipment

PART 3 EXECUTION

3.1 EXAMINATION

A. Verify sizes of equipment connections before fabricating transitions.

B. Verify rated walls are ready for fire damper installation.

C. Verify ducts and equipment installations are ready for accessories.

D. Check location of air outlets and inlets and make necessary adjustments in position to conform to architectural features, symmetry, and lighting arrangement.

3.2 INSTALLATION

A. Metal Ducts: Install in accordance with SMACNA Duct Construction Standards - Metal and Flexible.

B. Install flexible connections immediately adjacent to fans and motorized equipment. Install flexible connections specified between fan inlet and discharge ductwork. Prevent flexible connectors being in tension while running.

C. Install back-draft dampers on intake of exhaust fans.

D. Locate ducts with sufficient space around equipment to allow normal operating and maintenance activities. Apply duct insulation specified.

E. During construction install temporary closures of metal or taped polyethylene on open ductwork to prevent construction dust from entering ductwork system.

F. Do not operate fans until ductwork is clean, bearings lubricated, and fan has been test run under observation.

G. Install fans with resilient mountings and flexible electrical leads.

END OF SECTION

THIS PAGE
WAS INTENTIONALLY
LEFT BLANK

SECTION 15950

TESTING, ADJUSTING, AND BALANCING FOR HVAC

PART 1 GENERAL

1.1 SUMMARY

A. Section Includes:
   1. Testing, adjusting, and balancing of air systems.

1.2 SUBMITTALS

A. Draft Reports: Submit for review prior to final acceptance of Project.

B. Test Reports: Submit prior to final acceptance of Project and for inclusion in operating and maintenance manuals. Assemble in soft cover, letter size, 3-ring binder, with table of contents page and tabs, and cover identification. Include reduced scale drawings with air outlets and equipment identified to correspond with data sheets, and indicating thermostat locations.

1.3 QUALITY ASSURANCE

A. Report Forms: AABC MN-1 National Standards for Total System Balance forms or NEBB forms.

PART 2 PRODUCTS - Not Used

PART 3 EXECUTION

3.1 EXAMINATION

A. Before starting work, verify systems are complete and operable.

B. Report defects, deficiencies, or abnormal conditions in mechanical systems preventing system balance.

C. Beginning of work means acceptance of existing conditions.

3.2 INSTALLATION TOLERANCES

A. Air Handling Systems: Adjust to within plus or minus 5 percent of design for supply systems and plus or minus 10 percent of design for return and exhaust systems.

B. Air Outlets and Inlets: Adjust to within plus or minus 10 percent of design.

3.3 AIR SYSTEM PROCEDURE

A. Adjust air handling and distribution systems to deliver design supply, return, and exhaust air quantities within previously stated tolerances.

B. Make air flow rate measurements in ducts by traverse of entire cross sectional area of duct.

C. Measure air quantities at air inlets and outlets.

D. Use volume control devices to regulate air quantities only to extent those adjustments do not create objectionable air motion or sound levels. Change volume using dampers mounted in ducts.

E. Vary total system air quantities by adjustment of fan speeds.

F. Measure static air pressure conditions on air supply units, including filter and coil pressure drops, and total pressure across fan. Allow for pressure drop equivalent to 50 percent loading of filters.

G. Adjust automatic outside air, return air, and exhaust air dampers for design conditions.

H. Measure and record temperature of inlet and discharge air for fan coil. Calculate and record cooling capacity.

3.4 FIELD QUALITY CONTROL

A. Verify recorded data represents actually measured or observed conditions.

B. Permanently mark settings of adjustment devices. Set and lock memory stops.

END OF SECTION

SECTION 16050

GENERAL ELECTRICAL PROVISIONS

PART 1 GENERAL

1.1 INTENT

A. It is the intent of these specifications that all electrical work specified herein, be coordinated as required with the work of all other trades identified in other divisions of the specifications and the drawings, so that all installations shall operate as designed. All systems shall be completely assembled, tested, adjusted, and demonstrated to be ready for operation in compliance with the requirements of the Contract Documents before acceptance by the Owner and Engineer.

B. Electrical system layout indicated on the drawings is generally diagrammatic. Locations of outlets and equipment shall be governed by architectural, structural and mechanical conditions and obstructions. Any reasonable change in location of outlets and equipment prior to the rough in shall be done without additional expense to the Owner. This does not apply to equipment, which is located by dimensions on the drawings. Equipment shall be located within 1/8 inch of the dimensional location indicated on the drawings unless otherwise permitted by the Owner or Engineer. The Contractor shall verify in the field all dimensions and clearances affecting the installation of his work in relation to established datum, to building openings and clearances, and to the work of other trades. Should interferences occur which will necessitate any deviation from the layout or dimensions indicated, the Owner or Engineer shall be notified and any changes approved before proceeding with the work.

C. Rigid components such as bus, bus duct, throat connection, and enclosures shall be aligned and connected with special care to prevent excessive stress in joints, supports, and connections. Installations of all equipment shall be straight and plumb to building structures.

D. Equipment with moving parts such as switches, circuit breakers, and switch operating mechanisms shall be carefully aligned to ensure free mechanical operation.

1.2 SUMMARY

A. The work included under these specifications shall include furnishing and the installation of new, specified materials and equipment and the providing of engineering data, accessories, and field services as stipulated herein and in accordance with the Contract Documents.

1.3 ELECTRICAL INTERFACE

A. Electrical Contractor shall furnish all conduit wiring and electrical devices to interconnect all mechanical systems, fire alarm systems and controls including,

but not limited to, duct mounted smoke detectors, power supplies, interconnecting wiring, and interlocks. Electrical Contractor shall also provide all conduit, wire, and terminations for the Instrumentation and Controls equipment specified in Section 40 91 23.

1.4 HAZARDOUS WASTE

A. Electrical Contractor shall be responsible for effecting and coordinating safe disposal of all electrical equipment removed or renovated under this contract that contains recognized hazardous materials including, but not limited to, the following list:
   1. Fluorescent lamps.
   2. Fluorescent lamp ballasts.
   3. Oil-filled transformers and equipment containing PCBs.

B. Electrical Contractor shall submit all documents, chain of custody and receipts confirming proof of proper disposal of the hazardous materials indicated above to the Owner and/or Engineer.

1.5 REFERENCES - CODES AND STANDARDS

A. Applicable codes and standards will be referred to in other sections of this division by acronyms as defined below:

1.	NECA	National Electrical Contractor's Association
2.	AFBMA	Antifriction Bearing Manufacturers Association
3.	ANSI	American National Standards Institute
4.	ASME	American Society of Mechanical Engineers
5.	ASTM	American Society for Testing and Materials
6.	AWS	American Welding Society
7.	DEMA	Diesel Engine Manufacturers Association
8.	Fed Specs	Federal Specifications
9.	EIA	Electronic Industries Association
10.	ICEA	Insulated Cable Engineers Association
11.	IEEE	Institute of Electrical and Electronic Engineers
12.	IES	Illuminating Engineering Society
13.	NEC	National Electrical Code
14.	NEMA	National Electrical Manufacturers Association
15.	NFPA	National Fire Protection Association
16.	UL	Underwriters' Laboratories
17.	CAL OSHA	California Occupational Safety and Health Act
18.	BAAQM	Bay Area Air Quality Management District regulations

B. The edition of referenced codes and standards, in effect as of the date of contract, shall constitute minimum requirements and shall be strictly complied with unless supplemented or modified by more stringent requirements of the Contract Documents.

1.6 REGULATORY REQUIREMENTS

A. Electrical equipment and materials shall be installed in conformance with all applicable requirements of NFPA, local power company, federal, state, and local codes, including California Energy Codes (CEC Title 24).

B. Furnish products listed and classified by Underwriters Laboratories, Inc. (UL), Electrical Testing Laboratories, Inc. (ETL), or other recognized, acceptable testing and listing agencies as suitable for the purpose specified and shown. The Contractor shall immediately notify the Owner and Engineer of any provision in the contract document that are contrary to any applicable codes.

1.7 SAFETY

A. All work shall be performed in a safe manner in accordance with all federal, state and local codes and regulations including any Owner safety regulations or procedures. In addition, the following special electrical precautions as a minimum shall be observed.

B. Shutdowns
1. Prior to any work on any electrical circuits, circuits shall be de-energized, tested for absence of voltages, residual voltage discharged and the circuit properly tagged and locked out.
2. Circuits above 600-volts shall also have properly sized grounds installed for personnel ground protection.
3. All electrical shutdowns shall be coordinated and scheduled with Owner and/or Engineer to minimize effect on adjacent areas.
4. Electrical shutdowns are required for all tie-in connections and/or modifications to electrical panels and equipment including power centers, switchgear, motor control centers, 480/277-volt lighting and distribution panels, and 208-volt panels with bolt-on breakers.

C. Shutdowns are not required for:
1. Installation and/or removal of 120/208-volt plug-in modules for bus duct units on 400-Amp or lower rated bus ducts.
2. Load measurements, monitoring, and testing/debugging of low voltage circuits.
3. Hot phasing of medium voltage cable selector switches. Work to be done by qualified personnel only.
4. Connections of conductors to the load side of spare circuit breakers of 120/208-volt panels.

D. Hot Phase Work
1. Hot panel work may be requested for work on 120/208-volt panels if and only if panel cannot otherwise be shutdown. Request shall be made to the Owner and shall include panel identification, panel schedule, building area and/or equipment affected, scope of work to be performed and reasons why panel cannot be shutdown. The following shall, as a minimum, be observed:
    a. Use buddy system. Person shall not be involved in actual installation.

b. All hot circuits shall be adequately protected with temporary shields while work is occurring.
c. The removal of knockouts (KO's), insertion of conduit into boxes, installation of locknuts and bushings, and use of non-metallic fish shall be allowed to take place when the temporary shield is in place.
d. The removal and installation of circuit breakers shall only be performed with tools having insulated handles.
e. The connection of wires shall be performed in the order of ground, neutral and hot.

E. Lockout / Tag out Procedure:
1. Contractor shall use the District's standard Lockout/Tag out procedure. A copy of the program will be provided to the Contractor prior to start of work.
2. Contractor shall have a recognized Lockout/Tag out program that complies with OSHA Standard 29, CFR 1910.47, and/or California Code of Regulations, Title 8, Electrical Safety Orders 2329.4. This program shall be submitted to the Owner and/or Engineer for approval prior to start of work.

F. Electrical Equipment Rooms:
1. Fabrication, construction, or storage of tools, equipment and/or liquids shall not be permitted in electrical rooms.

1.8 COORDINATION WITH OTHER TRADES

A. The Contractor shall be responsible for coordinating with other trades or subcontractors working on the project so that all work shall be completed without interruption of the schedule. This shall include all installations necessary to support the structural, architectural, and mechanical conditions.

B. Any changes in construction or coordination requirements that deviate from the intent or requirements of the specifications and/or drawings must be described and detailed in writing and submitted to the Owner and/or Engineer for approval.

C. The Contractor shall provide for all contingencies where required to operate any equipment prior to completion of electrical work.

D. The Contractor shall be responsible for checking all contract drawings and coordinating his work accordingly. This coordination shall include the clearance of all ducts, supports, ventilation, and process equipment. No additional payments will be made for work and/or materials necessary to resolve interferences. Start of construction work means Contractor accepts unconditionally the existing conditions and contractor waives any related expenses relative to it.

1.9 RECEIVING, HANDLING, AND STORAGE

A. The Contractor shall provide for receiving, handling, and storage of all material and equipment in accordance with Division 1 requirements of these specifications.

1. Materials and equipment stored on the Owner's premises shall be moved by the Contractor without additional cost, if requested by the Owner and/or Engineer.
2. The Contractor shall be responsible for the safe keeping of all materials and equipment stored on the Owner's premises.

B. Cleaning:
1. The exterior and interior surfaces of each equipment item shall be cleaned of sand, dirt, and other foreign materials after its removal from storage and immediately before its movement to its final location.
2. Before initial operation of individual items of equipment, the Contractor shall remove all dirt, mortar, and other material, which has been spilled, misplaced, or has been allowed to mar the finished surfaces.
3. The interior of all electrical equipment, including relays and electrical contacts, shall be thoroughly wiped and vacuumed clean before the equipment is energized.

C. Debris Removal:
1. All debris generated by or as a result of the work of the electrical contractor shall be removed from the site and disposed of as directed by the Owner and/or Engineer, but not less than once each work day.

1.10 EQUIPMENT FOUNDATIONS AND CONCRETE WORK

A. Concrete pads for mounting switchgear, motor control centers, and secondary unit substations etc. shall be provided as indicated on the drawings and in accordance with other sections of these Specifications.

B. The Contractor shall provide anchor bolts for floor-mounted equipment as required by California Title 24 for seismic bracing of equipment.

C. Equipment shall be leveled and grouted in accordance with Division 3 of these specifications. Concrete materials, placing methods, and general workmanship shall conform to applicable sections of DIVISION 3. The Contractor shall utilize concrete mixes and sources of supply approved by the Engineer.

1.11 MISCELLANEOUS MATERIAL

A. Contractor shall furnish all wire, raceway, monitoring hardware and accessories for equipment interconnections as necessary to obtain a complete operable system, in accordance with the Contract Documents.

B. Miscellaneous materials, except those specified to be furnished by the Owner or other contractors, shall be furnished as required for the complete erection of the equipment. These materials shall include, but shall not be limited to, grout, shims, wedges, dowels, anchors, supports, equipment mounting sill channels, bolting, gaskets, packing, welding rod, and consumable gases.

1.12 MATERIAL SUBSTITUTION

A. If equipment manufacturers are identified by name, and it is indicated that equipment of equal quality and performance will be accepted, the Contractor may submit alternate items to the Engineer for approval.

B. If only one manufacturer is indicated, no alternate equipment will be accepted.

C. Re-design of electrical or any other trade's work that is required due to the Contractor's use of an approved alternate item; arrangement of equipment; and/or layout other than specified herein, shall be done by the Contractor at his expense. Redesign and detailed plans shall be subject to approval by the Engineer.

D. Engineer's approval of redesigned or altered drawings submitted by Contractor, shall not relieve the Contractor of his responsibility to provide a complete and operable installation.

E. Equipment and materials installed without approval of the Owner and/or Engineer shall be subject to removal and replacement at the Contractor's expense with approved materials.

F. Equipment and/or materials identified on the drawings or in these specifications by manufacturer's name and/or part number are so identified for the sole purpose of establishing the type and quality of the equipment and/or materials. Such specific, non-generic callouts are not in any way intended to rule out or establish preemptory qualifications relative to manufacturers not identified specifically by name.

1.13 TERMINATIONS

A. All electrical equipment shall be suitable for connection to 75 degree C rated cable and/or wire loaded to its 75 degree C ampacity.

1.14 AREA CLASSIFICATIONS

A. Electrical equipment shall be suitable and rated for the areas in which it is installed. Special areas will be identified and indicated on the drawings.

B. The following NEMA type devices shall be installed, unless otherwise noted, as described below:
   1. Indoor-dry: NEMA 1 or 12. See the drawings for detailed information.
   2. Indoor-wet or non-hazardous dust: NEMA 4 or 4X.
   3. Outdoor: NEMA 3R, 4, or 4X, as required by the drawings.
   4. Hazardous gas or vapor producing areas - indoor: NEMA 7 (Class I, Division 1), group as required by the drawings, suitable for wet locations.
   5. Hazardous gas or vapor producing areas - outdoor: NEMA 7 (Class I, Division 1), group as required by the drawings, suitable for wet locations.
   6. Hazardous dust areas - indoor: NEMA 9 (Class II, Division 1), group as required by the drawings.

7. Hazardous dust areas - outdoor: NEMA 9 (Class II, Division 1), group as required by the drawings, suitable for wet locations.
8. Equipment utilizing a water spray, oil, or non-corrosive coolant, or emitting a non-hazardous dust shall be equipped with NEMA 13 devices.
9. Corrosive areas, dust, or vapor: NEMA 4X, gasketed, PVC (outlet boxes), fiberglass (control stations, enclosures, and junction boxes), or stainless steel (large cabinets or enclosures), as required by the drawings.

1.15 EXCAVATION AND BACKFILL

A. Excavation and backfill required for the installation of electrical work shall be as indicated on civil, structural or electrical drawings and in accordance with other sections of these specifications.

1.16 PAINTING AND FINISHING

A. Unless otherwise noted, electrical equipment shall be shop finished with one or more coats of primer and two coats of high-grade oil-resistant enamel. The finish color shall be manufacturer's ANSI color standard. Shop primer shall be manufacturer's standard phosphatized coating compatible with the finish enamel.

B. Furnish at least two (2) quarts of touchup paint of the same type and color as the factory applied paint for all different paints used.

C. Finishes marred during shipping, handling, or installation shall be touched up to match the original factory finish. Finish painting of conduit, hangers, and other installation materials will be performed along with general painting of the structure. All painting shall be done in accordance with the Bay Area Air Quality Management District Regulations (Ref. 16010.04.B).

D. All galvanized surfaces on which the galvanizing is removed by cutting, drilling, or by any other operation shall be re-galvanized with "Galvanizing Powder M-321" as manufactured by the American Solder and Flux Company of Philadelphia, Pennsylvania; with "Zincilate 810" as manufactured by Industrial Metal Protective, Inc., of Dayton, Ohio; with "Zinc Rich" coating as manufactured by ZRC Chemical Products Company, Quincy, Massachusetts; or acceptable equal. The Contractor shall furnish this protective material and shall apply it in the field to any surface where the galvanized coating is broken or removed either intentionally or unintentionally.

1.17 FASTENING TO BUILDING STRUCTURES

A. The methods of attaching or fastening equipment supports or hangers to the building structure shall meet or exceed UBC Seismic Zone 4 requirements (latest edition), and be subject to approval by the Engineer at all times. Shop drawings or samples shall be submitted for approval before proceeding with the work. Drilling, welding, or the use of explosive driven fasteners on building structures shall require written prior approval by the Engineer for each type of application except where so detailed on the drawings.

B. Clamps, straps, bands and other mechanical devices shall be used as the standard methods of fastening equipment supports or hangers.

C. Fireproofing material shall be removed to allow for attachment of support clamps and devices and subsequently replaced with material having the same qualities as the removed fireproofing.

1.18 SLEEVES AND OPENINGS

A. The Contractor shall be responsible for all required sleeves and openings for electrical raceways, cables and equipment. Contractor shall provide required sleeves and openings, not provided during structure fabrication, using a hacksaw, a hole saw, or a core drill subject to approval by the Owner and/or Engineer.

B. Engineer shall verify the location of openings to be cut through structural concrete (floors, columns, etc) prior to cutting or drilling by Contractor. Use existing spare openings if at all possible, even if it requires a longer conduit run.

C. All openings in fire rated device structures shall be sealed using a fire resistant caulking, sealant material or approved system to obtain a fire rating equal to or greater than the structure, which is being penetrated.

D. Contractor shall submit proposed fire-sealing methods/systems to the Engineer for prior written approval before installation.

E. Roof Penetrations. Conduit roof penetrations shall be flashed and hot patched using a method compatible with existing roof system by a qualified contractor. Electrical contractor shall coordinate with appropriate trades.

F. Openings through Structural Steel. Conduit shall not be routed through building steel unless such routing is approved by the Owner and/or Engineer. Holes required for conduit passages shall be drilled or sawed, not burned.

G. Openings through Grating. Alternate routing of raceways should be used to avoid conflict with grating. If field cutting is necessary, the openings shall be made at divisions or ends of grating sections. These openings shall be square and shall be neatly finished. All rough spots shall be ground until smooth and re-galvanized as required.

H. Finishing Box-outs. Openings that have been cut through walls and floors of masonry or concrete for the passage of raceways shall be finished either by grouting around the conduit or by grouting 3/16-inch (5 mm) thick steel bands around the periphery of the openings. Where sleeves or bands are installed in floors, they shall project 4 inches (100 mm) above the finished floors.

I. Openings beneath Equipment. Where the cables are in conduits and the conduit projects through the opening, opening beneath equipment shall be closed with grout. Closure plates of transite, micarta, or similar material shall be used to close openings beneath equipment where the cables entering the equipment are not in enclosing raceways. The plates shall not be less than 3/8-inch (5 mm) thick

and shall be cut to fit closely around the outside surfaces of the cable where the cable passes through the plates. Edges of the holes in these plates shall be rounded and smoothed to prevent damage to the cable. The plates shall be securely fastened to the floor or to the equipment, and all openings around the plates shall be caulked with an effective putty seal or acceptable equal method.

J. Unused openings beneath equipment shall be covered with solid plates of the same material as closure plates for those openings through which conduit or cable enter the equipment. These plates shall be securely fastened to the floor or to the equipment and caulked as indicated above.

1.19 WELDING

A. Welding shall completely fuse the welded member to the supporting steel and shall be neat in appearance. All workmen performing ferrous welding of any kind shall be qualified according to the procedures for qualification tests for fillet welders described in American Welding Society Publication AWS-D1.1, Structural Welding Code. Documentation of approved qualification testing shall be available upon request of the Engineer.

1.20 INSULATION

A. All supports for raceways connected to equipment, piping, and raceways that have been electrically insulated from contact with other structures, shall be properly installed to prevent shunting of the insulation.

1.21 NAMEPLATES

A. All nameplates for electrical equipment shall be permanently attached to the front of the equipment.

1.22 STARTUP

A. The Contractor shall, at a minimum, perform the following tests as applicable for each item of equipment or system installed under this Contract:
   1. Check for correct direction of rotation of all motors.
   2. Check that motor starter overload heaters are in place and properly sized.
   3. Check polarity and phase rotation at transfer switches, bus ties, uninterruptible power supply systems, etc.
   4. Verify correctness of all wiring installed under this contract.
   5. Check wiring for shorts, continuity and grounds.
   6. All ground fault interrupt devices shall be tested individually.

B. For large systems, verify correct operation of small sections of the system before operating the entire system.
   1. All insulation and continuity tests shall have been completed before startup of any item of equipment or system.

C. The Contractor shall be responsible for operation and maintenance, including all costs thereof, for systems or equipment temporarily placed in operation for testing and adjusting purposes.

D. Complete all testing and startup procedures.

1.23 INSPECTIONS AND TESTS

A. Tests shall be performed on all electrical equipment and complete systems as required under the various sections of these specifications prior to being placed in operation.

B. All tests shall be made after notification, and in the presence of, the Owner and/or Engineer and authorities having jurisdiction. Operational and performance tests on equipment which normally operates only during certain seasons of the year shall be made during the appropriate season, and at such time when ability of equipment to perform at design capacity can be demonstrated.

C. Contractor shall supply all labor, materials, instruments, and supplies of any kind, required for testing. Material and equipment damaged or shown to be defective during tests or unable to perform at design or rated capacity, shall be repaired or replaced by the Contractor at no additional expense, to the satisfaction of the Owner and/or Engineer.

D. Six (6) copies of all test results and/or reports shall be submitted to the Engineer following completion of tests. Submittals shall be bound in standard three-ring binders, tabbed and indexed throughout for easy readability.

1.24 MAINTENANCE TOOLS

A. Any special tools furnished with equipment for maintenance and/or adjustment of equipment shall be stored and maintained by the contractor during installation and testing, and shall be turned over to the Owner's maintenance department following final acceptance of the equipment by the Owner and/or Engineer.

1.25 MANUFACTURER'S INSPECTION AND SUPERVISION

A. Contractor shall provide the services of a trained manufacturer's representative, to inspect and advice during the installation of the electrical equipment.

B. The service described above shall be provided as determined necessary by the Contractor for proper installation of the equipment. Availability of these services shall not relieve the Contractor of responsibility for technical supervision of his construction personnel.

C. The presence of a manufacturer's representative shall not relieve the Contractor of responsibility for the work under these specifications.

1.26 BOLTED ELECTRICAL CONNECTIONS

A. Where bolted electrical current-carrying connections are made, the metal surfaces shall be thoroughly cleaned and coated with an oxide inhibitor such as Penetrox A or No-Oxide A compound.

B. The tightness of each bolt in each factory-made bolted electrical connection shall be validated during erection and connection of the equipment.

C. It shall be the Contractor's responsibility to certify that the tightness of each bolt in all bolted electrical connections, factory or field, is in accordance with the manufacturer's recommendations.

D. Bolted electrical connections shall be tightened with manual torque wrenches. Torque wrenches shall be so constructed that they will visually or audibly indicate when the proper torque is reached. The Contractor is responsible for the accuracy of each torque wrench and shall provide documentation of testing by an acceptable laboratory or testing agency when requested by the Engineer.

E. Torque Values. If the equipment manufacturer's erection instructions do not include recommended torque values for bolt tightening or specify an alternate method for tightening bolted electrical connections, torque values shall be in accordance with UL Std 486A and/or those listed in the table below.

TORQUE VALUES FOR DRY, NON-PLATED, NON-LUBRICATED BOLTS					
Bolt Size	18-8 Stainless Steel (Inch-lbs)	Brass (Inch-lbs)	Silicon Bronze (Inch-lbs)	Aluminum 24ST-4 (Inch-lbs)	316 Stainless Steel (Inch-lbs)
1/4"-20 1/4"-28	75.2 94.0	61.5 77.0	68.8 87.0	45.6 57.0	78.8 99.0
5/16"-18 5/16"-24	132 142	107 116	123 131	80 86	138 147
3/8"-16 3/8"-24	236 259	192 212	219 240	143 157	247 271
7/16"-15 7/16"-20	376 400	317 327	349 371	228 242	393 418
1/2"-13 1/2"-20	517 541	422 443	480 502	313 328	542 565
9/16"-12 9/16"-18	682 752	558 615	632 697	413 456	713 787
5/8"-11 5/8"-18	1,110 1,244	907 1,016	1,030 1,154	715 798	1,160 1,301
3/4"-10 3/4"-16	1,530 1,490	1,249 1,220	1,416 1,382	980 958	1,582 1,558
7/8"-9 7/8"-14	2,328 2,318	1,905 1,895	2,140 2,130	1,495 1,490	2,430 2,420
1"-8 1"-14	3,440 3,110	2,815 2,545	3,185 2,885	2,205 1,995	3,595 3,250

F. Connection Bolt Tightness Check:

1. The tightened bolts in electrical connections shall be checked at random as selected by, and in the presence of, the Engineer. The Contractor shall provide calibrated hand torque wrenches and the necessary platforms, equipment, and personnel for the random check.
2. The number of bolts checked shall be acceptable to the Engineer based upon observance of the quality and completeness of the tightening operations. A minimum of 10 percent of the bolts in each connection, but not less than two bolts in each connection, shall be checked.
3. The Contractor shall be responsible for coordinating the checking of bolt tightness so that minimum interference with equipment erection and connection will be experienced. Removal of covers and similar dismantling of equipment to permit the Engineer to witness the testing of bolt tightness of enclosed connections shall be part of the work included under these specifications.
4. Checking of tightness of electrical connections in the presence of the Engineer is intended to assist the Contractor in avoiding the expense of repairing costly connection failures. This check shall not relieve the Contractor of complete responsibility for the integrity of the electrical connections.

1.27 LUBRICATION

A. The Contractor will furnish all oils, greases, and other lubricants required to place equipment in operation. The Contractor shall apply lubricants in accordance with the manufacturer's recommendations. The lubricants used shall be acceptable to the Owner and/or Engineer. Furnish Material Safety Data Sheets (MSDS) identifying all classified hazardous materials proposed for usage to the Engineer with submittals.

1.28 SPECIAL SHIPPING REQUIREMENTS

A. Where specified, the manufacturer shall mount and ship impact recorders on each rail car transporting the specified equipment. The impact recorders shall be mounted at the factory to provide a permanent record of the magnitude of axial, transverse, and vertical forces to which the equipment will be subjected while in transit. The custody of the impact recorders upon arrival at the plant site shall be the responsibility of the manufacturer's field representative. The recorder impact charts shall be delivered to the Engineer and shall become part of the furnished equipment documentation records.

1.29 WIRING

A. In general, all devices furnished under these specifications and requiring electrical connections shall be designed for wiring into electrical enclosures with terminal blocks.
   1. Terminal blocks shall be furnished for:
      a. Conductors requiring connection to circuits external to the specified equipment
      b. Internal circuits crossing shipping splits

c. Equipment where parts replacement and maintenance will be facilitated. Splices will not be permitted in control wiring or instrument leads.

2. All wiring leaving an enclosure shall leave from terminal blocks and not from other devices in the enclosure.
3. Terminal blocks shall not be mounted in compartments containing cables or busses operating at voltages above 600-volts.
4. Each terminal block, terminal, conductor, relay, breaker, fuse block, and other auxiliary devices, shall be permanently labeled to coincide with the identification indicated on the drawings.

B. A shorting type terminal block shall be installed at an accessible location for each set of current transformers supplied with the equipment furnished under these specifications. The shorting terminal block shall be the one nearest the current transformers. No other shorting type terminal blocks are required unless specified otherwise.

C. All connections requiring disconnect plug and receptacle type devices shall be provided with factory-terminated conductors on each plug and receptacle. Plugs and receptacles shall be factory-wired into junction boxes containing terminal blocks for external connections. All conductors on the disconnect portion of plug-receptacle assemblies shall be in a common jacket.

D. Combining Circuits
1. The electrical circuitry is laid out in generally diagrammatic fashion, subject to the physical obstructions of the project and the equipment constraints present in the final purchase items.
2. The Contractor may elect to conserve physical space by combining certain "home runs" into the same conduit.
3. If the Contractor elects to do so, detailed shop drawings must be submitted for review and approval by the Engineer, prior to any conduit or wiring installation. The Contractor will then be advised of any combinations that will be allowed. The submittals must be complete with physical layouts and electrical calculations indicating de-rating for temperature or number of conductors for each proposed recombination.
4. Any proposed combining of circuits must comply fully with the NFPA 70 – National Electrical Code.
5. Approved combining of circuits shall be designed and constructed at no additional cost to the Owner for changes from the contract documents.

1.30 ELECTRICAL WIRING DIAGRAMS

A. Connection and interconnection wiring diagrams furnished by the Contractor shall have indicated at each termination, conductor identification consisting of the opposite end destination. The wiring diagrams shall be drawn with all devices indicated in their relative physical locations and shall represent the equipment and terminals arrangement, as they would appear to a person wiring the equipment.

B. Where interconnecting wiring from different items of equipment or sectional wiring diagrams of the same item of equipment appear on different wiring

diagram sheets, all interconnections shall be clearly identified. Where sectional wiring diagrams are required for a single item of equipment, such as a relay panel or control panel, that section of the panel which is represented by each individual wiring diagram sheet shall be keyed on that sheet in a manner acceptable to the Engineer.

C. Information indicated on the Contractor's shop drawings shall include wiring of the individual panel items, as they actually will appear in the panel, contact arrangements of switches, and internal wiring of relays and instruments.

D. Elementary diagrams shall be cross-referenced to terminal markings on the connection and interconnection diagrams, but need not indicate complete details of circuits external to the panels. Each item of panel-mounted equipment indicated on the diagrams shall be identified by item number and name.

E. Wiring Diagrams. Schematic, connection, and interconnection diagrams furnished by the Contractor shall be based on schematic (elementary) and connection diagrams furnished by the manufacturers of the equipment.

1. After receiving the manufacturer's diagrams, the Contractor shall prepare his schematic (elementary), connection, and interconnection diagrams, which shall indicate the same terminal designations and the same terminal arrangement as indicated on the manufacturer's diagrams.
2. The complete connection diagram of each section or unit of an equipment lineup shall be on an individual sheet. Information on each connection diagram sheet shall include point-to-point wiring of the entire unit, as it would appear to the person wiring the unit, including wiring for components. Elementary diagrams of control and instrument circuits, contact arrangement of switches, and internal wiring of relays and instruments for each unit shall be on additional sheets as required. Interconnection diagrams shall be on separate sheets. All sheets shall be the same size.
3. Each item of equipment, indicated on the diagrams, shall be identified by item number and name.
4. When the Contractor's standard terminal designations differ from those required by the schematic and connection diagrams furnished by the manufacturer, or from those marked on the Contractor's connection drawings submitted for acceptance and returned by the Engineer, the Contractor shall revise terminal designations in accordance with the Engineer's requirements on both the Contractor's drawings and the terminal blocks.
5. Sufficient space shall be left on the "customer's" side of outgoing terminal blocks for adding cable color codes and circuit numbers.
6. At the time the Contractor's connection drawings are submitted for review, the Engineer will mark thereon all external circuit and wire designations required, and such designations shall be added to the connection drawings by the Contractor. Except as marked on the drawings submitted by the Contractor and returned by the Engineer, no external circuit and wire designations shall be indicated on the Contractor's drawings.

1.31 TERMINAL BLOCKS

A. Terminal blocks shall be furnished with white marking strips and, where permitted by the safety codes and standards, shall be without covers. Not less than 25 percent spare, unused terminals shall be furnished on each terminal block for circuit modifications and for termination of all conductors in a multi-conductor control cable.

B. Fuses shall not be mounted on terminal blocks. Neither step type terminal blocks nor angle mounted terminal blocks will be acceptable.

C. All terminal blocks, except internal terminal blocks in factory pre-wired electronic systems cabinets, shall be rated 600-volts minimum and shall have strap screw terminals. Terminal blocks for 10 AWG and smaller 600-volt insulated conductors shall be Marathon 1500 series, or acceptable equal. Terminal blocks shall be appropriately sized for larger wire size or higher voltage insulated incoming conductors as necessary.

1.32 CONTROL POWER

A. Electrical power for control and instrumentation will be a nominal 120-volt, single-phase, 60 Hz. The Contractor shall provide any devices required for proper operation and protection of the equipment during electrical power supply and ambient temperature fluctuations described in the following paragraphs.

B. All AC electrical control devices shall, unless otherwise specified, be designed for continuous operation at any voltage from 102 to 132-volts. The dropout voltage shall be less than 75-volts for relays and 90-volts for contactors and starters. The AC electrical control devices operating at nominal voltages other than 120-volt AC shall be designed for continuous operation over proportional voltage variations.

C. All devices shall be guaranteed to operate satisfactorily under voltage conditions specified in the above paragraphs and at a range of ambient temperatures from 50 degrees C to 30 degrees C outdoors and from 50 ☐ degrees C to ☐C indoors.

1.33 ELECTRICAL INSTRUMENTS

A. All indicating instruments for electrical quantities shall be as indicated elsewhere in these specifications. All AC instruments shall be designed for operation through 5-Ampere current transformer secondary and 120-volt potential transformer secondary.

1.34 SWITCHBOARD CONTROL DEVICES

A. Control switches, push buttons, selector switches, and indicating lights shall be as listed below:

B. Control Switches. Control switches shall be 600-volt, 20 ampere, multi-stage, rotary type with a minimum of 10 contacts. Switches shall have black, fixed,

pistol-grip type handles and engraved black plastic escutcheon plates with targets. Switches shall be Westinghouse Type W, General Electrical Type SB-1, General Electric Type SB-10, Electro Switch Type 20K or acceptable equal.

C. Push Buttons and Selector Switches. Push buttons and selector switches shall be heavy-duty oil-tight, Allen-Bradley Bulletin 800H, Square D Class 9001 Type K, or acceptable equal. Toggle switches shall be Honeywell Micro Switch Type TL or acceptable equal.

D. Indicating Lights. Status indicating lights shall be cluster Light Emitting Diode (LED) type Allen-Bradley, Square D, General Electric or approved equal, lamp color as specified and appropriately sized resistors, 120-volt AC full voltage.

E. LED indicating light colors shall be coordinated with indicated conditions as specified in the following table. Indicating lights shall be energized when the condition exists and shall be de-energized when the condition does not exist.

LED Color	Status and Alarm Condition Indication
Amber	Equipment Control in “Auto” Mode. Controlled by Internal or External Control or Sensing Device(s). Equipment Abnormality - Circuit Breaker Trip.
Blue	Equipment Control in “Remote” Mode. Controlled by Remote device such as Level Switches or PLC or Remote Panel.
Green	Equipment De-Energized - Motor Stopped, Valve Closed, Circuit Breaker Open.
Red	Equipment Energized - Motor Running, Valve Open or Circuit Breaker Closed. Alarm Indication – Abnormal Condition.
White	Equipment Power On Indication

1.35 RODENT PROOFING

A. The Contractor shall make all pad-mounted transformers, switchgear, secondary unit substations, motor control centers, control panels, and relay panels rodent proof by closing all exterior openings using metal plates or metal screens. This shall be accomplished either by the manufacturer in the fabrication of the equipment, or by the Contractor after installation of the equipment.

1.36 RECORD DRAWINGS

A. Contractor shall designate a set of project drawings as the job "Record Drawings". This set shall be located at the jobsite and maintained in a clean undamaged state. This set shall be continually updated to accurately reflect all construction field deviation change orders and any additional work authorized by Owner and/or Engineer. During construction the record set shall be available to any representative of the Owner and/or Engineer for review and inspection, and

the final completed for-record set delivered to the Owner and/or Engineer within 10 working days following acceptance of Work-in-Place.

PART 2 MATERIALS

Not Applicable.

PART 3 INSTALLATION

Not Applicable

END OF SECTION

THIS PAGE
WAS INTENTIONALLY
LEFT BLANK

SECTION 16060

BASIC ELECTRICAL MATERIALS AND METHODS

PART 1 GENERAL

1.1 SUMMARY

A. This section includes grounding electrodes and conductors; equipment grounding conductors; bonding methods and materials; conduit and equipment supports; anchors and fasteners; sealing and fireproofing of sleeves and openings between conduits and wall.

1.2 REFERENCE SPECIFICATIONS, CODES AND STANDARDS

A. The standards referred to, except as modified in the Contract Documents, shall have full force and effect as though printed in these Specifications. These standards are not furnished to the Contactor since manufacturers and trades involved are assumed to be familiar with their requirements. The Contractor shall obtain copies of reference standards direct from publication sources as needed for proper performance and completion of the work.

B. ASTM B 187 - Specifications for Copper Bus, Rod, and Shapes.

C. IEEE 142 - Recommended Practice for Grounding of Industrial and Commercial Power Systems.

D. IEEE 1100 - Recommended Practice for Powering and Grounding Electronic Equipment.

E. NECA - Standard of Installation.

F. NETA ATS - Acceptance Testing Specifications for Electrical Power Distribution Equipment and Systems.

G. NFPA 70 - National Electrical Code (NEC). Latest edition.

H. UL 467 - Electrical Grounding and Bonding Equipment.

1.3 SYSTEM DESCRIPTION

A. Grounding electrode system consists of the following elements:
   1. Metal underground water pipe
   2. Metal frame of the building
   3. Concrete encased electrode
   4. Metal underground gas piping system
   5. Rod electrodes
   6. Service equipment
   7. Enclosures
   8. Separately derived systems.

B. Anchor and fasten electrical products to building elements and finishes as follows:
   1. Concrete Structural Elements: Provide preset inserts.
   2. Concrete Surfaces: Provide expansion anchors.
   3. Interior Structural Steel: Provide appropriate size beam clamps.
   4. Solid Masonry Walls: Use expansion anchors and preset inserts.
   5. Sheet Metal: Provide sheet metal screws.

1.4 DESIGN REQUIREMENTS

A. Furnish products listed and classified by Underwriters Laboratories, Inc. (UL), Electrical Testing Laboratories, Inc. (ETL), or other recognized, acceptable testing and listing agencies as suitable for purpose specified and shown.

B. Grounding shall be in accordance with the National Electrical Code (NEC). Where size, type, rating and quantities indicated or specified are in excess of NEC requirements, the more stringent requirements and the greater size, rating, and quantity indications govern.

C. Select materials, sizes, and types of anchors, fasteners, and supports to carry at least twice the loads of equipment and raceway, including weight of wire and cable in raceway.

1.5 CONTRACTOR SUBMITTALS

A. In accordance with Division 1 requirements.

B. Product Data: Submit grounding electrodes and connections for fastening components.

C. Test Report: Measure overall resistance to ground. Provide certified test report for Engineer’s Review.

1.6 CLOSEOUT SUBMITTALS

A. In accordance with Division 1 requirements.

B. Project Record Documents: Record actual locations of components and grounding electrodes.

1.7 QUALIFICATIONS

A. Manufacturer: Company specializing in manufacturing products specified in this section with minimum three years’ experience.

B. Installer: A firm with at least five years of successful installation experience on projects with electrical grounding work similar to that required for this project.

1.8 FIELD MEASUREMENTS

A. Verify field measurements prior to fabrication.

PART 2 PRODUCTS

2.1 GROUNDING SYSTEM

A. Except as otherwise indicated, provide for each electrical grounding indicated, an assembly of materials, including, but not necessarily limited to, cable/wire, connectors, terminals (solderless lugs), grounding rods/electrodes, bonding jumper braid, and other items and accessories needed for a complete installation. Where more than one type meets indicated requirements, selection is Installer's option. Where materials or components are not otherwise indicated, provide products as recommended by the accessories manufacturers and in compliance with the NEC, and established industry standards.

B. All grounding materials required shall be furnished new and undamaged in accordance with the following requirements:

2.2 WIRE

A. Service Equipment Grounding Electrode Conductor: Bare, soft-drawn copper, Class AA stranding, ASTM B 8. Size per the NEC, Article 250, unless otherwise noted.

B. Electrical Equipment Grounding Conductor: Insulated, soft-drawn copper, Class B stranding or solid, with green-colored polyvinyl chloride insulation, UL 83, sized according to the NEC, unless otherwise noted.

2.3 BUS AND BARS

A. Soft copper, cross section not less than 1/4-inch thick by 1-inch wide, ASTM B 187.

2.4 MECHANICAL CONNECTORS

A. Description: Bolt-on bronze connectors, suitable for grounding and bonding applications in configurations required for the particular installation.

B. Manufacturer
1. Burndy Corp.
2. Anderson
3. Thomas & Betts
4. 3-M Co.

2.5 CONTROL DEVICES

A. Selector Switches and Push Buttons:
1. Product Description: NEMA ICS 5, heavy-duty oil-tight.
2. Contact Ratings: Class A150 or minimum 10 amperes continuous.
3. Selector switches: Rotary type. Allen-Bradley Bulletin 800H, Square D Class 9001 Type K, or approved equal.
4. Toggle switches: Honeywell Micro Switch Type TL or approved equal.

5. Each switch shall have a legend plate - "Hand-Off-Auto", "Local-Remote", "Start - Stop", etc. as required to describe the control mode or function.

B. Indicating Lights:
1. Cluster type Light Emitting Diode (LED) suitable for operation at 120-Volt AC control voltage, or as required. The LED color shall be coordinated with the alarm or indicated function.

Lens Color	Status and Alarm Condition Indication
Amber	Equipment Control in “Auto” Mode. Controlled by Internal or External Control or Sensing Device(s). Equipment Abnormality - Circuit Breaker Trip.
Blue	Equipment Control in “Remote” Mode. Controlled by Remote device such as Level Switches or PLC or Remote Panel.
Green	Equipment De-Energized - Motor Stopped, Valve Closed, Circuit Breaker Open.
Red	Equipment Energized - Motor Running, Valve Open or Circuit Breaker Closed. Alarm Indication – Abnormal Condition.
White	Equipment Power On Indication

C. Magnetic Relays
1. Product Description: NEMA ICS 5, Class A300 magnetic control relay.
2. Contacts: Form A or B (normally open / normally closed or both) as required.
3. Contact Ratings: Class A150 or minimum 10 amperes continuous.
4. Coil Voltage: 120-volts, 60 Hz or as required.
5. Enclosure: NEMA ICS 6, Type 1 as required to meet conditions of installation.

D. Solid State Relays
1. Product Description: NEMA ICS 5, solid-state electronic relay.
2. Contacts: Form A or B (normally open / normally closed or both) as required.
3. Contact Ratings: Class A150 or minimum 10 amperes continuous.
4. Coil Voltage: 120-volts, 60 Hz or as required.
5. Enclosure: NEMA ICS 6, Type 1 as required to meet conditions of installation.

E. Time Delay Relays (On-Time Delay and Off-Time Delay)
1. Product Description: NEMA ICS 5, solid-state time delay relay - time delay after Energization or after De-Energization as specified or shown on drawings.
2. Contacts: Form A or B (normally open / normally closed or both) as required.

3. Contact Ratings: Class A150 or minimum 10 amperes continuous.
4. Coil Voltage: 120-volts, 60 Hz. or as required.
5. Enclosure: NEMA ICS 6, Type 1 as required to meet conditions of installation.

F. Plug-in Relays
1. Product Description: NEMA ICS 5, miniature, hermetically sealed relay.
2. Contacts: 4 pole double throw (4PDT) Form A or B (normally open / normally closed).
3. Contact Ratings: Class A150 or minimum 5 amperes continuous.
4. Coil Voltage: 120-volts, 60 Hz. or as required.
5. Enclosure: Hermetically sealed, suitable for Class 1, Division 1 and 2 installations.
6. Socket: To match relay and meet conditions of installation.

G. Limit Switch
1. Product Description: NEMA ICS 5, heavy-duty, lever-operated limit switch.
2. Contacts: Form A or B (normally open / normally closed or both) as required.
3. Contact Ratings: Class A150 or minimum 10 amperes continuous.
4. Enclosure: NEMA ICS 6, Type 1 as required to meet conditions of installation.

2.6 EXOTHERMIC CONNECTIONS

A. Product Description: Exothermic materials, accessories, and tools for preparing and making permanent field connections between grounding system components. Molds, cartridges, materials, and accessories as recommended by the manufacturer of the molds for the items to be welded.

B. Manufacturer:
1. Cadweld (Erico Products) "Exolon" Low Emission or acceptable equal. Molds and powder shall be furnished by the same manufacturer.

2.7 FLUSH GROUND PLATES

A. Cadweld B-162 series, B-164 series, or acceptable equal.

2.8 FLEXIBLE JUMPER STRAP

A. Flexible flat conductor, 480 strands of 30-gauge, bare copper wire; ¾-inch width, 9-1/2-inch-long; 48.25 kcMil, minimum. Protect braid with copper bolt-hole ends with holes sized for 3/8-inch diameter bolts.

2.9 BONDING PLATES, CONNECTIONS, TERMINALS AND CLAMPS

A. Provide electrical bonding plates, connectors, terminals and clamps, and all accessories as recommended by bonding plate, connector, terminal and clamp manufacturer for indicated applications to obtain a complete system. Components shall be high-strength, high-conductivity copper alloy.

2.10 UFER GROUND

A. In accordance with the latest edition of the National Electrical Code.

2.11 ROD ELECTRODES

A. Material: Copper

B. Diameter: 5/8-inch (16 mm)

C. Length: 10 feet (3,000 mm)

2.12 GROUNDING WELL COMPONENTS

A. Well Pipe: 8 inches NPS (DN200) by maximum 12 inches (300-mm) long, concrete or fiberglass pipe with belled end.

B. Well Cover: Cast iron with legend "GROUND" embossed on cover.

2.13 ANCHORS AND FASTENERS

A. Materials and Finishes: Corrosion resistant, Heavy-duty expansion type.

2.14 FORMED STEEL CHANNEL

A. Manufacturers:
   1. Unistrut
   2. Kindorf
   3. Superstrut
   4. B-Line
   5. Approved Equal

B. Description: Galvanized steel.

2.15 SEALING AND FIREPROOFING

A. Fire and Smoke Rated Surfaces:
   1. Manufacturers:
      a. 3M CP 25WB + Caulk
      b. 3M FS 195 wrap or strip with restricting collar
      c. 3M CS 195 composite sheets
      d. Proset Systems fire rated floor and wall penetrations
      e. Dow Corning Fire Stop System
      f. Substitutions: Not permitted.
   2. Non-Rated Surfaces:
      a. Use stamped steel, chrome plated, hinged, split ring escutcheons or floor/ceiling plates for covering openings in occupied areas where conduit is exposed.
      b. In exterior wall openings below grade, use a modular mechanical type seal consisting of interlocking synthetic rubber links shaped

to continuously fill the annular space between the conduit and the cored opening or a water-stop type wall sleeve.

c. At interior wall or floor openings use Tremco Fyre-Sil, Sika Corp. Sikaflex la, Sonneborn Sonolastic NPT, or Mameco Vulkem 116 urethane caulk or approved equal.

3. General:

a. Furnish UL listed products or products tested by an independent testing laboratory.

b. Select products with rating not less than rating of wall or floor being penetrated.

PART 3 EXECUTION

3.1 EXAMINATION

A. Verify that final backfill and compaction have been completed before driving rod electrodes.

B. Verify that abandoned wiring and equipment serve only abandoned facilities.

3.2 EXISTING WORK

A. Modify existing grounding system to maintain continuity to accommodate renovations.

B. Extend existing grounding system using materials and methods as specified.

C. Install temporary wiring and connections to maintain existing systems in service during construction.

D. Perform work on energized equipment or circuits with experienced and trained personnel following all safety rules and procedures.

E. Remove, relocate, and extend existing installations to accommodate new construction.

F. Repair adjacent construction and finishes that were damaged during demolition and extension work.

G. Remove exposed abandoned grounding and bonding components, fasteners, supports and electrical identification components. Cut embedded support elements below surface of walls and floors. Patch surfaces damaged by removal of existing components to match surrounding finishes.

3.3 GROUNDING AND BONDING INSTALLATION

A. Verify that final backfill and compaction has been completed before driving rod electrodes.

B. Installation:

1. Remove paint, rust, mill-oils, and surface contaminants at connection points.
2. Install grounding electrode conductor and connect to reinforcing steel in slab or foundation.
3. Bond together metal siding not attached to grounded structure; bond to ground.
4. Bond together reinforcing steel and metal accessories.
5. Bond together each metallic raceway, pipe, duct and other metal object entering enclosures and exiting slabs. Install minimum # 12 AWG bare copper conductor.
6. Install isolated grounding conductor for circuits supplying electronic equipment in accordance with IEEE 1100.
7. Equipment Grounding Conductor: Install separate, insulated conductor within each feeder and branch circuit raceway. Terminate each end on suitable lug, bus, or bushing.
8. Connect to site grounding system.
9. Bond to lightning protection system.
10. Install continuous grounding using underground cold water system and building steel as grounding electrode. Where water piping is not available, install artificial station ground by means of driven rods or buried electrodes.
11. Permanently ground entire light and power system in accordance with NEC, including service equipment, distribution panels, lighting panel boards, switch and starter enclosures, motor frames, grounding type receptacles, and other exposed non-current carrying metal parts of electrical equipment.
12. Install branch circuits feeding isolated ground receptacles with separate insulated grounding conductor, connected only at isolated ground receptacle, ground terminals, and at ground bus of serving panel.
13. Accomplish grounding of electrical system by using insulated grounding conductor installed with feeders and branch circuit conductors in conduits. Size grounding conductors in accordance with NEC. Install from grounding bus of serving panel to ground bus of served panel, grounding screw of receptacles, lighting fixture housing, light switch outlet boxes or metal enclosures of service equipment. Ground conduits by means of grounding bushings on terminations at panel boards with installed # 12 AWG conductor to grounding bus.
14. Ground electrical system using continuous metal raceway system enclosing circuit conductors in accordance with NEC.
15. Permanently attach equipment and grounding conductors prior to energizing equipment.

3.4 GROUND CONDUCTORS

A. Grounding conductors shall be located and connected as indicated on drawings.

B. Ground conductors under buildings or structures shall be buried with at least 6 inches of earth cover. Buried grounding conductors extending beyond the foundations of buildings or structures shall have at least 18 inches of earth cover.

C. Exposed conductors shall be installed inconspicuously in vertical or horizontal positions on supporting structures. When located on irregular supporting surfaces or equipment, the conductors shall run parallel to or normal to dominant surfaces.

D. Conductors routed over concrete, steel, or equipment surfaces shall be kept in close contact with those surfaces by using fasteners located at intervals not to exceed 3 feet.

E. Conductors passing through floor slabs shall be installed in conduit sleeves that extend above the floor slab, a minimum of 1-1/2 inches to provide protection. Sleeves shall be sealed to maintain fireproof integrity.

F. Provide isolated grounding conductor for circuits supplying equipment and systems as shown on the drawings.

G. Provide a separate equipment-grounding conductor for low voltage distribution systems, single or three phase feeder circuit and each branch circuit with single or three phase protective devices. Install a grounding conductor in conduit with phase and neutral conductors. Single-phase branch circuits for 120 and 277 volt lighting, receptacles, and motors shall have a phase, neutral, and ground conductors installed in the common conduit. Provide suitable bonding jumpers and approved grounding type bushings for flexible conduits used for equipment connection utilized in conjunction with the above branch circuits with. Single-phase circuits for equipment and all branch circuits installed in non-metallic or flexible conduits shall be provided with a separate grounding conductor.

H. Ground the neutral of the various transformers of separately derived systems with a bare copper conductor, installed in conduit, from the neutral directly to the building interior cold water pipe or nearest solidly grounded structural reinforcing steel, in accordance with the provisions of NEC Article 250-24. Use bolted accessible connections to the ground system so that the neutral ground can be disconnected for test. Ground the system ground conduit as detailed on drawing. Size the grounding electrode conductors in accordance with the NEC, Table 250-66, or as indicated.

3.5 CONNECTIONS

A. All connections shall be made by the exothermic welding process, except where otherwise indicated on the drawings or in these specifications. The manufacturer's instructions on the use of exothermic welding materials shall be followed in all details. All surfaces to be joined by the welds shall be thoroughly cleaned. Paint, scale, and other deleterious substances shall be removed from surfaces of ungalvanized structural steel members by grinding. Galvanized steel surfaces shall be cleaned with emery paper. Powder and molds shall be kept dry and warm until used. Worn or damaged molds shall not be used.

B. All exothermic welded connections shall successfully resist moderate hammer blows. Any connection which fails such test or which, upon inspection, indicates a porous or deformed weld shall be remade.

C. All exothermic welds shall encompass 100 percent of the ends of the materials being welded. Welds, which do not meet this requirement, shall be remade.

D. Worn, damaged, incorrectly sized, or improperly shaped molds which, in the opinion of the Engineer, do not make satisfactory welds, shall be removed from the jobsite after being physically rendered inoperable.

E. All contact surfaces of bolted and screwed connections shall be thoroughly cleaned and coated with oxide inhibitor before being securely tightened.

3.6 CONDUIT GROUNDING

A. All grounding bushings within all enclosures, including equipment enclosures, shall be wired together and connected internally to the enclosure grounding lug or grounding bus with a bare copper conductor. Grounding bushings shall be grounded with conductors sized in accordance with NEC, but not smaller than #8 AWG.

3.7 EQUIPMENT GROUNDING

A. Comply with NEC 250, except where larger sizes or more conductors are indicated.
   1. All electrical equipment shall be connected to the grounding system with an insulated, green, stranded or solid copper equipment-grounding conductor.
   2. Terminate each end on suitable lug, bus, or bushing. The term "electrical equipment", as used in this article, shall include, but not be limited to, all enclosures containing electrical connections or bare conductors, except that individual devices, such as solenoids, pressure switches, and limit switches, shall be exempt from this requirement, unless the device requires grounding for proper operation.
   3. Large equipment, such as metal-clad or metal-enclosed switchgear, will be furnished with a grounding bus that shall be connected to the grounding system.
   4. Most other equipment will be furnished with grounding pads and/or grounding lugs which shall be connected to the grounding system. All ground connection surfaces shall be cleaned immediately prior to connection.
   5. Contractor shall furnish all grounding material required, but not furnished with the equipment.

B. Install equipment grounding system such that all metallic structures, enclosures, raceways, junction boxes, outlet boxes, cabinets, machine frames, portable equipment and other conductive items in close proximity with electrical circuits will operate continuously at ground potential and provide a low impedance path for possible ground fault currents.

C. Where grounding system extension stingers are indicated on the drawings to be provided for connection to electrical equipment, the Contractor shall connect the bare grounding conductor to the equipment ground bus, pad, or lug. Except where otherwise indicated on the drawings, all equipment ground conductors that

are not an integral part of a cable assembly, shall be sized in accordance with the requirements of NEC. All ground conductors installed in conduit shall be insulated.

D. Suitable grounding facilities, acceptable to the Engineer, shall be furnished on electrical equipment not so equipped. The grounding facilities shall consist of compression type terminal connectors bolted to the equipment frame or enclosure and providing a minimum of joint resistance.

E. The conduit system is not considered to be a grounding conductor, except for lighting fixtures. No grounding conductor shall be smaller in size than # 12 AWG, unless it is a part of an acceptable cable assembly.

3.8 GROUND SYSTEM RESISTANCE

A. All ground resistance measurements shall be made with a three-terminal "Megger" type ground tester which applies alternating current to the electrodes and which gives a reading in direct current ohms. Two reference ground probes shall be used, and all tests shall be made in accordance with the instrument manufacturer's instructions for ground resistance testing. Some of the acceptable instruments are as follows:
   1. Megger Null Balance Earth Tester, James G. Biddle and Company.
   2. Vibroground, Associated Research, Inc.
   3. Ground-Ohmer, Herman H. Sticht Co., Inc.

B. Submit final certified test reports of all grounding tests.

3.9 ANCHORS, FASTENERS AND SUPPORT

A. Installation:
   1. Locate and install anchors, fasteners, and supports in accordance with NECA “Standard of Installation”.
   2. Do not fasten supports to pipes, ducts, mechanical equipment, or conduit.
   3. Do not use spring steel clips and clamps.
   4. Do not use powder-actuated anchors.
   5. Do not drill or cut structural members.

B. Supports:
   1. Fabricate supports from structural steel or formed steel members. Rigidly weld members or install hexagon head bolts to present neat appearance with adequate strength and rigidity. Install spring lock washers under nuts.
   2. Install surface-mounted cabinets and panel board with minimum of four anchors.
   3. In wet and damp locations use steel channel supports to stand cabinets and panel boards 1 inch off wall.
   4. Use sheet metal channel to bridge studs above and below cabinets and panel boards recessed in hollow partitions.

3.10 SEALING AND FIREPROOFING

A. Fire-Rated Surface:
   1. Seal opening at floor and wall as follows:
      a. Opening through a fire rated wall, floor, ceiling or roof, must be sealed.
      b. Install galvanized sheet metal sleeves (minimum 12-gage) through opening and extending beyond minimum of 1 inch on each side of building element.
      c. Size sleeve allowing minimum of 1-inch void between sleeve and building element.
      d. Pack void with backing material.
      e. Seal ends of sleeve with UL listed fire-resistive silicone compound to meet fire rating of structure penetrated.
   2. Where conduit penetrates fire-rated surface, install fire-stopping product in accordance with manufacturer's published instructions.

B. Non-Rated Surfaces:
   1. Opening through a non-fire rated wall, floor, ceiling or roof must be sealed using an approved type of material.
   2. Use galvanized sheet metal sleeves in hollow wall penetrations to provide a backing for the sealant. Grout area around sleeve in masonry construction.
   3. Install escutcheons or floor/ceiling plates where raceway, penetrates non-fire rated surfaces in occupied spaces.
   4. Install rubber links of mechanical seal tighten in place and sized for the pipe, in exterior wall openings below grade, in accordance with the manufacturer's instructions.
   5. All pipe penetrations at interior partitions and/or walls, laboratory spaces, telephone, data and communication rooms and similar spaces where the room pressure or odor transmission must be controlled, shall be sealed. Sealant shall be applied to both sides of the penetration in such a manner that the annular space between the pipe sleeve and the pipe is completely filled.

3.11 ACCEPTANCE TESTING

A. In accordance with Division 1 requirements.

B. Grounding and Bonding: Perform inspections and tests as outlined below (NETA ATS, Section 7.13 – Grounding Systems).
   1. Visual and Mechanical Inspection
      a. Inspect ground system for compliance with drawings and specifications.
      b. Electrical Tests (Small Systems)
         1) Perform ground-impedance measurements utilizing the fall-of-potential method per ANSI/IEEE Standard 81 "IEEE Guide for Measuring Earth Resistivity, Ground Impedance, and Earth Surface Potential of a Ground System." Instrumentation utilized shall be as defined in section 12 of the above guide and shall be specifically designed for

ground impedance testing. Provide sufficient spacing so that the plotted curves flatten in the 62% area of the distance between the item under test and the current electrode.

c. Electrical Tests (Large Systems)
   1) When sufficient spacing of electrodes per Electrical Tests (Small Systems) is impractical, perform ground impedance measurements utilizing either the intersecting curves method or the slope method. (Ref. Nos. 40 and 41 in IEEE Std. 81).

d. Equipment Grounds
   1) Utilize two-point method of IEEE Std. 81. Measure between equipment ground being tested and known low-impedance grounding electrode or system.

2. Test Values
   a. The main ground electrode system impedance-to-ground shall be no greater than five (5) ohms for commercial or industrial systems and one (1) ohm or less for generating stations, transmission stations, and large industrial systems. Equipment grounds, depending on size and length of grounding conductor, should be only fractionally higher than system ground.

END OF SECTION

THIS PAGE
WAS INTENTIONALLY
LEFT BLANK

SECTION 16075

ELECTRICAL EQUIPMENT IDENTIFICATION

PART 1 GENERAL

1.1 SUMMARY

A. The extent of the electrical systems and equipment requiring identification is shown on the drawings, and the extent of identification required is specified herein and in individual sections of work requiring identification. The types of electrical identification specified in this section include the following:
   1. Exposed conduit color banding.
   2. Buried cable warnings.
   3. Cable/conductor identification.
   4. Operational instructions and warnings.
   5. Danger signs.
   6. Equipment/system identification signs.

1.2 REFERENCE SPECIFICATIONS, CODES AND STANDARDS

A. NFPA 70 National Electrical Code (NEC). Latest approved edition.

B. APWA ULCC Uniform Color Code for Buried Utilities.

C. ANSI Z535.1 Safety Color Code.

1.3 System Description:

A. Identify all electrical equipment as stated below:
   1. All transformers shall be identified by 1-inch high block letters cut in stencil and applied with yellow paint on a flat-black background. The transformer number, primary and secondary voltages, and the kVA shall be shown.
   2. All panelboards, distribution or electrical equipment enclosure shall be identified by nameplates. The circuit number, voltage, and phase shall be shown.
   3. Identify by the circuit number shown on the drawings all receptacles and lighting switches by using ¼-inch high white characters on ½-inch wide black stick-on tape placed on the wall directly above the device if the device is wall mounted. Place the tape on the device enclosure if the device is not wall mounted.
   4. All motors, starters, disconnect switches, and control devices shall be identified by circuit number, with ¼-inch high white characters on a ½-inch wide black stick-on tape.
   5. All branch circuits in outlet boxes shall be identified with circuit number using wrap-around labels.
   6. All underground raceway or cable shall be marked with buried warning tape along its entire length.
   7. All exposed raceway longer than 10 feet in length shall be identified.

8. Furnish all panelboards with a complete 5-inch by 7-inch typewritten directory mounted in the inner door under a clear plastic cover set in a metal frame.

1.4 CONTRACTOR SUBMITTALS

A. In accordance with Division 1 requirements.

B. Catalog data for nameplates, labels, and markers.

C. Manufacturer's Instructions: Indicate application conditions and limitations of use stipulated by Product testing agency specified under regulatory requirements. Include instructions for storage, handling, protection, examination, preparation and installation of Product.

1.5 REGULATORY REQUIREMENTS

A. Conform to requirements of NFPA 70 – National Electrical Code.

B. Furnish products listed and classified by Underwriters' Laboratories, Inc. (UL), Electrical Testing Laboratories, Inc. (ETL), or other recognized, approved testing and listing agencies as suitable for the purpose specified and shown.

PART 2 PRODUCTS

2.1 NAMEPLATES AND LABELS

A. Nameplates
1. Engraved three-layer laminated plastic, white letters on black background for normal power and white letters on red background for emergency power. Communications and control cabinets shall be labeled with white letters on green background.
2. Locations
   a. Each electrical distribution and control equipment enclosure.
   b. Communication cabinets.
   c. Motor control centers, including each combination module.
3. Letter Size
   a. Use 1/8-inch letters for identifying individual equipment and loads.
   b. Use ¼-inch letters for identifying grouped equipment, loads, panelboards, and transfer switch.
   c. Use ½-inch letters for identifying the main switchboard, motor control centers, and large distribution switchboards.

B. Labels
1. Adhesive tape, with 3/16-inch black letters on clear background. Use only for identification of individual wall switches and receptacles, control device stations, and multi-outlet devices.

2.2 WIRE MARKERS

A. Vinyl or cloth tape, split sleeve or tubing-type preprinted wire markers, self-adhesive.

B. Manufacturers:
   1. Brady
   2. Thomas & Betts
   3. 3-M Co.

C. Locations: Each conductor at panelboard gutters, pull boxes, outlet and junction boxes, control panels, motor controllers and starters, and each load connection.

D. Legend
   1. Power and Lighting Circuits: Branch circuit or feeder number indicated on contract drawings.
   2. Control Circuits: Control wire number indicated on shop drawings.
   3. Neutral Conductors: Clearly indicate the branch circuit or feeder number the neutral serves. In multi-wire circuits where the neutral is shared, mark the neutral with the circuit number of the “A” phase.

2.3 CONDUIT MARKERS

A. Provide manufacturer's standard preprinted, flexible or semi-rigid, permanent, plastic-sheet conduit markers, minimum of 3 mils thick and 1-1/2-inch wide extending 360 degrees around conduits; designed for self-adhesive attachment to conduit. Except as otherwise indicated, provide lettering that indicates the voltage of the conductor(s) in the conduit. Provide 8-inch minimum length for 2-inch and smaller conduit, 12-inch minimum length for larger conduit.

B. Identify conduits containing conductors above 600-volts with the following alternating markers
   1. DANGER - HIGH VOLTAGE
   2. The voltage, as applicable (i.e. - 12,000, 4,160)

C. Location: Furnish markers for each conduit longer than 10 feet.

D. Spacing: 20 feet on center.

E. Color: Unless otherwise indicated or required by governing regulation, provide orange markers with black letters.
   1. Fire Alarm System: Red w/black letters.
   2. Telephone System: Green w/yellow letters.
   3. Data/Communication. System: White w/black letters.
   4. Emergency System: Yellow w/black letters.

F. Legend:
   1. 480 Volt System: Normal 480/277-volts.
   2. 208 Volt System: Normal 208/120-volts.
   3. Fire Alarm System: Fire alarm.
   4. Telephone System: Telephone.

5. Data/Communication System: Data/communications.

2.4 FASTENERS

A. Secure all labels and nameplates with self-tapping stainless steel screws. Use contact type permanent adhesive where screws cannot or should not penetrate the substrate.

2.5 BAKED ENAMEL DANGER SIGNS

A. Provide manufacturer's standard "DANGER" signs of baked enamel finish on 20 gage steel; of standard red, black and white graphics; 14-inch by 10-inch size except where 10-inch by 7-inch is the largest size which can be applied where needed, and except where larger size is needed for adequate vision; with recognized standard explanation wording (e.g. HIGH VOLTAGE, KEEP AWAY, BURIED CABLE, DO NOT TOUCH SWITCH).

2.6 LETTERING AND GRAPHICS

A. Coordinate names, abbreviations and other designations used in the electrical identification work, with the corresponding designations shown, specified or scheduled. Provide numbers, lettering and wording as indicated or, if not otherwise indicated, as recommended by manufacturers or as required for proper identification and operation/maintenance of the electrical systems and equipment.

2.7 UNDERGROUND WARNING TAPE

A. Three-inch minimum width, 5 mil thickness, foil bonded polyethylene tape, detectable type, with suitable continuous warning legend describing buried electrical lines. Tape color shall conform to APWA uniform color code using ANSI Z535.1 safety colors. Text shall be black, 2-inch minimum letters.

PART 3 EXECUTION

3.1 PREPARATION

A. Degrease and clean surfaces to receive nameplates and labels.

B. Coordination: Where identification is to be applied to surfaces that require finish, install identification after completion of painting.

C. Regulations: Comply with governing regulations and the requests of governing authorities for the identification of electrical work.

3.2 APPLICATION

A. Install nameplate and label parallel to equipment lines.

B. Secure nameplate to equipment front using screws, rivets, or adhesive.

C. Secure nameplate to outside moveable surface of door on panelboard.

D. Conduit Identification:
1. Where electrical conduit is exposed in spaces with exposed mechanical piping, which is identified by a color-coded method, apply color-coded identification on the electrical conduit in a manner similar to the piping identification. Except as otherwise indicated, use orange as the coded color for conduit.
2. Paint red band on each fire alarm conduit longer than 10 feet.
3. Paint bands 20 feet on center.

E. Cable/Conductor Identification:
1. Apply cable/conductor identification on each cable and conductor in each box/enclosure/cabinet where the wires of more than one circuit or communication/signal system are present, except where another form of identification (such as color-coded conductors) is provided.
2. Match identification with marking system used in panelboards, shop drawings, contract documents, and similar previously established identification for project electrical work.

F. Operational Identification and Warnings
1. Wherever reasonably required to ensure safe and efficient operation and maintenance of the electrical systems, and electrically connected mechanical systems and general systems and equipment, including the prevention of misuse of electrical facilities by unauthorized personnel, install self-adhesive plastic signs or similar equivalent identification, instruction or warnings on switches, outlets and other controls, devices and covers of electrical enclosures. Where detailed instructions or explanations are needed, provide plasticized tags with clearly written messages adequate for the intended purposes.

G. Danger Signs
1. In addition to the installation of danger signs required by governing regulations and authorities, install appropriate danger signs at the locations indicated and at locations subsequently identified by the Installer of electrical work as constituting similar dangers for persons in or about the project.
2. High Voltage: Install danger signs wherever it is possible, under any circumstances, for persons to come into contact with electrical power of voltages higher than 120 volts.
3. Critical Switches/Controls: Install danger signs on switches and similar controls, regardless of whether concealed or locked up, where untimely or inadvertent operation (by anyone) could result in significant danger to persons, or damage to or loss of property.

H. Equipment/System Identification Signs
1. Install an engraved plastic-laminate sign on each major unit of electrical equipment in the building; including the central or master unit of each electrical system and the communication/signal systems, unless the unit is specified with its own self-explanatory identification or signal system.

2. Except as otherwise indicated or specified, provide single line of text, ½-inch high lettering on 1-1/2-inch high sign (2-inch high where two lines are required), white lettering in black field.
3. Provide text matching terminology and numbering of the contract documents and shop drawings.
4. Provide signs for each unit of the following categories of electrical work
   a. Major electrical switchboard
   b. Electrical substation
   c. Motor control center
   d. Fire alarm control panel and annunciators.

I. Install signs at locations indicated or, where not otherwise indicated, at location for best convenience of viewing without interference with operation and maintenance of equipment. Secure to substrata with fasteners, except use adhesive where fasteners should not or cannot penetrate the substrata.

J. Identify underground conduits using underground warning tape. Install one tape per trench at 6 inches below finished grade.

END OF SECTION

SECTION 16123

600-VOLT RATED WIRE AND CABLE

PART 1 GENERAL

1.1 SUMMARY

A. This section includes covers all labor, material, tools, equipment and services required to install building wire and cable, service entrance cable, control cables, wiring connectors and connections.

1.2 REFERENCE SPECIFICATIONS, CODES AND STANDARDS

A. ASTM B 8 - Specifications for Concentric-Lay-Stranded Copper Conductors, Hard, Medium-Hard, or Soft.

B. NECA - Standard of Installation.

C. NETA ATS - Acceptance Testing Specifications for Electrical Power Distribution Equipment and Systems.

D. NFPA 70 - National Electrical Code (NEC). Latest approved edition.

E. UL 83 - Thermoplastic-Insulated Wires and Cables.

1.3 DESCRIPTION OF WORK

A. The requirements of this section apply to cable and wires specified on the drawings and in these specifications. The extent of electrical wire and cable work is indicated on drawings and schedules and by the requirements of this section. The applications for cable, wire and connectors required, but not limited to, are as follows:

1. Power distribution circuitry.
2. Lighting circuitry.
3. Appliance and equipment circuitry.
4. Wiring for motors of mechanical equipment.
5. Wiring from the motors of mechanical equipment to the disconnect switches or junction boxes, including wiring for pushbuttons, pilot lights, interlocks and similar devices as directed, shown, or specified.
6. Wiring from the motors of mechanical equipment to motor starters, including other auxiliary wiring as may be required, directed, or shown.
7. Line voltage wiring as required by Division 15, and interlocking to motor starters.
8. Control wiring for motors, mechanical equipment, relays and switches, and similar mechanical-electrical devices.
9. Line voltage wiring to thermostats, alarm systems and other miscellaneous equipment.

1.4 PROJECT CONDITIONS

A. Conductor sizes are based on copper.

B. Wire and cable routing shown on Drawings is diagrammatic unless dimensioned.

C. Route wire and cable as required to complement project conditions.

D. The electrical contractor shall be responsible for any and all raceways and raceway/cable supports in accordance with other sections of these specifications.

1.5 REGULATORY REQUIREMENTS

A. Furnish products listed and classified by Underwriters Laboratories, Inc. (UL), Electrical Testing Laboratories, Inc. (ETL), or other recognized, acceptable testing and listing agencies as suitable for the purpose specified and shown.

1.6 CONTRACTOR SUBMITTALS

A. In accordance with Division 1 requirements.

B. Product Data: Submit manufacturer’s catalog cuts and technical data for building wire and cables.

C. Test Report: Measure overall insulation resistance to ground. Provide certified test report for Engineer’s Review.

1.7 CLOSEOUT SUBMITTALS

A. In accordance with Division 1 requirements.

B. Provide project record documents showing actual locations of components and circuits.

1.8 QUALIFICATIONS

A. Manufacturer shall be a Company specializing in manufacturing products specified in this section with a minimum of five years’ experience.

1.9 FIELD MEASUREMENTS

A. Verify field measurements as indicated on drawings.

1.10 COORDINATION

A. In accordance with Division 1 requirements.

B. Where wire and cable destination is indicated and routing is not shown, determine exact routing and lengths required.

C. Wire and cable routing indicated is approximate unless dimensioned. Include wire and cable lengths within 10 feet of length shown.

PART 2 PRODUCTS

2.1 MANUFACTURERS

A. Domestic manufacturer regularly engaged in the manufacture of Building Wire and Cable products for at least five years as follows:
   1. American Wire and Cable.
   2. Cerro Wire and Cable Co.
   3. General Cable Corp.
   4. Okonite Co.

2.2 BUILDING WIRE AND CABLE

A. Building wire and cable shall be UL83 compliant, insulated, single conductor, copper, solid or stranded, rated for 600-volts AC. The insulation shall be thermoplastic material rated for 90 degrees Celsius dry locations, 75 or 90 degrees Celsius wet locations, THW, THHN/THWN, RHW or XHHW, per ANSI/NFPA 70.

B. Use type THW insulation for feeders and branch circuits larger than 8 AWG, unless noted otherwise.

C. Use type THHN/THWN insulation for feeders and branch circuits 8 AWG smaller.

D. For Interior Dry Location: Use only building wire, THHN/THWN insulation, in raceway.

E. For Exterior Wet or Dry Locations: Use only building wire, THHN/THWN insulation, in raceway.

F. For Underground Dry or Wet Locations: Use only RHW or XHHW insulation rated for 90 degrees Celsius, in raceway.

G. For connections to electrical equipment, coordinate wire type with equipment manufacturer.

2.3 SERVICE ENTRANCE CABLES

A. Service entrance cables shall be insulated, single conductor, copper, stranded, rated for 600-volts AC, type XHHW insulation.

B. Overhead Service entrance cables shall be insulated, single conductor, copper, stranded, rated for 600-volts AC, type SE insulation.

2.4 INSTRUMENTATION AND CONTROL CABLES

A. Instrumentation cables to field mounted equipment and devices shall be minimum two (2) conductor No. 16 AWG, tin-coated copper, stranded, shielded twisted pair, 80 degree Celsius, PVC insulation foil shield with overall heavy duty polyethylene jacketing, rated for 600-volt AC.

B. Control cables to field mounted equipment and devices shall be a single conductor, insulated, No. 12 Awg minimum, copper, solid or stranded, rated for 600-volts AC. The insulation shall be thermoplastic material rated for 90 degrees Celsius dry locations, 75 degrees Celsius wet locations, THHN/THWN or XHHW, per ANSI/NFPA 70.

C. Multi-conductor control cables to field mounted equipment and devices shall consist of several single conductor, insulated No. 12 Awg minimum, copper, solid or stranded, rated for 600-volts AC with an overall protective PVC jacket. The insulation shall be thermoplastic material rated for 90 degrees Celsius dry locations, 75 degrees Celsius wet locations, PVC, THHN/THWN or XHHW, per ANSI/NFPA 70. Circuit identification shall consist of Method 1 - color coding in accordance with ICEA S-66-524, Appendix K Table K-2.

D. Instrumentation and control cable connected to equipment or devices within control panels shall be sized per requirements of equipment manufacturer (minimum #16 AWG control wire and #18 AWG instrumentation cable).

2.5 WIRING CONNECTORS

A. Split Bolt Connectors:
1. FCI Burndy Corp.
2. Thomas & Betts Co.
3. Cooper Crouse-Hinds

B. Solderless Pressure Connectors:
1. FCI Burndy Corp.
2. Ideal Industries Co.
3. Thomas & Betts Co.
4. 3-M Co.

C. Spring Wire Connectors:
1. Ideal Industries Co.
2. 3-M Co.

D. Compression Connectors:
1. FCI Burndy Corp.
2. Thomas & Betts Co.
3. 3-M Co.

2.6 WIRE COLOR CODE

A. Color-code all conductors:
1. Wire sizes 10 AWG and smaller shall have integral color-coded insulation.
2. Wire sizes 8 AWG and larger may have black insulation but shall be identified by color-coded electrical tape at all junction, splice, pull, or termination points.
3. Color tape shall be applied to at least 3 inches of the conductor at the termination ends and in junction or pull boxes or where readily accessible.
4. Conductors for all systems shall not change color at splice points.

5. Where there are two or more neutrals in one conduit, each shall be individually identified with the proper circuit.
6. For 4 AWG and larger ground conductors, identify with green tape at both ends and all visible points, included in all junction boxes.
7. Each phase shall be uniquely color-coded.
8. Color-code wires as indicated below:

	120/240-Volts	**120/208-Volts**	**277/480-Volts**
Phase:	a - black	a - black	a - brown
	b - red	b - red	b - orange
	n - white	c - blue	c - yellow
	g - green	n - white	n - white or natural gray
		g - green	

PART 3 EXECUTION

3.1 EXAMINATION

A. Verify that interior of building has been protected from weather.

B. Verify that mechanical work likely to damage wire and cable has been completed.

C. Verify that raceway installation is complete and supported.

3.2 PREPARATION

A. Completely and thoroughly clean and swab raceway before installing wire.

3.3 EXISTING WORK

A. Remove exposed abandoned wire and cable. Patch surfaces where removed cables pass through building finishes.

B. Disconnect abandoned circuits and remove circuit wire and cable. Remove abandoned boxes if wire and cable servicing them is abandoned and removed. Provide blank cover for abandoned boxes that are not removed.

C. Ensure access to existing wiring connections which remain active and which require access. Modify installation or provide access panel as appropriate.

D. Extend existing circuits using materials and methods and compatible with existing electrical installations, or as otherwise specified.

E. Clean and repair existing wire and cable that remain or is to be reinstalled.

3.4 INSTALLATION

A. General:
1. Install wire and cable in accordance with manufacturer's instructions and NECA “Standard of Installation”.

2. Route wire and cable as required to meet project conditions.
3. Identify and color code wire and cable. Identify each conductor with its circuit number or other designation indicated.
4. Protect exposed cable from damage.
5. Pull all conductors into raceway at same time.
6. Use suitable wire pulling lubricant for building wire 4 AWG and larger.
7. Support cables above accessible ceiling using standard support methods to support cables from structure. Do not rest cable on ceiling panels.
8. Neatly train and lace wiring inside boxes, equipment, and panelboards

B. Cable and Wire Size:
1. Conductor sizes are based on copper unless indicated as aluminum or “AL”.
2. Use 10 AWG conductors for 20 ampere, 120-volt branch circuits longer than 75 feet.
3. Use 10 AWG conductors for 20 ampere, 277-volt branch circuits longer than 200 feet.
4. Use stranded conductor for all feeders, branch and control circuits.

C. Special Techniques - Wiring Connections:
1. Clean conductor surfaces before installing lugs and connectors. Where an anti-oxidation lubricant is used, apply liberally, coating all exposed conductor surfaces.
2. Use suitable cable fittings and connectors.
3. Make splices, taps, and terminations to carry full ampacity of conductors with no perceptible temperature rise.
4. Tape un-insulated conductors and connector with two layers of half-lapped rubber insulating compound tape and two layers of half-lapped, 7-mil electrical tape, Scotch 33+, or equal.
5. Use split bolt connectors for copper conductor splices and taps, 8 AWG and larger.
6. Use solderless pressure connectors with insulating covers for copper conductor splices and taps, 8 AWG and smaller.
7. Use insulated spring wire connectors with plastic caps for copper conductor splices and taps, 10 AWG and smaller.
8. Stranded conductors for control circuits shall have fork or ring terminals crimped on for all device terminations. Bare stranded conductors shall not be placed directly under the screws.

3.5 FIELD QUALITY CONTROL

A. Visual and Mechanical Inspection:
1. Inspect wire and cable for physical damage and proper connection.
2. Measure tightness of bolted connections and compare torque measurements with manufacturer's recommended values.
3. Verify continuity of each branch circuit conductor.
4. Inspect compression-applied connectors for correct cable match and indentation.

B. Electrical Testing and Verification:
1. All 600 volt conductors 8 AWG and larger, shall be verified by use of a 500-volt meg-ohm-meter.

2. Perform continuity test to insure correct cable connection.
3. Correct malfunctions and/or deficiencies immediately as detected at no additional cost to the District, including additional verification testing.
4. Compile test report results and submit to Engineer for approval
5. Subsequent to final wire and cable terminations, energize all circuitry and demonstrate functional adequacy in accordance with system requirements.

C. Test Values
1. Compare bolted connection resistance to values of similar connections.
2. Bolt-torque levels should be in accordance with NETA ATS Table 10.12 unless otherwise specified by the manufacturer.
3. Minimum insulation-resistance values should not be less than 50 meg-ohms.
4. Investigate deviations between adjacent phases.

END OF SECTION

THIS PAGE
WAS INTENTIONALLY
LEFT BLANK

SECTION 16130

RACEWAY AND BOXES

PART 1 GENERAL

1.1 SUMMARY

A. Section includes conduit and tubing, surface and buried raceways, wireways, outlet boxes, pull boxes, junction boxes, hand holes and concrete manholes.

1.2 RELATED SECTIONS

A. Section 02580 – Precast Concrete Electrical Vaults and Handholes

B. Section 16060 – Basic Electrical Materials and Methods

1.3 REFERENCE SPECIFICATIONS, CODES AND STANDARDS

A. ANSI C80.1 - Rigid Steel Conduit, Zinc Coated.

B. ANSI C80.3 - Electrical Metallic Tubing, Zinc Coated.

C. NECA - “Standard of Installation.”

D. NEMA FB 1 - Fittings, Cast Metal Boxes, and Conduit Bodies for Conduit and Cable Assemblies.

E. NEMA OS 1 - Sheet-steel Outlet Boxes, Device Boxes, Covers, and Box Supports.

F. NEMA OS 2 - Nonmetallic Outlet Boxes, Device Boxes, Covers and Box Supports.

G. NEMA RN 1 - Plastic Externally Coated Galvanized Rigid Steel Conduit and Intermediate Metal Conduit.

H. NEMA TC 3 - PVC Fittings for Use with Rigid PVC Conduit and Tubing.

I. NEMA TC 6 - Non-Metallic Conduit.

J. NEMA 250 - Enclosures for Electrical Equipment (1,000 Volts Maximum).

K. NFPA 70 - National Electrical Code (NEC). Latest approved edition

L. UL 1 – Flexible Metal Conduit

M. UL 6 - Rigid Metal Conduit

N. UL 1242 - Intermediate Metal Conduit

O. UL 797 - Electrical Metallic Tubing

P. UL 651 - Rigid Non-Metallic Conduit

1.4 SYSTEM DESCRIPTION

A. Raceway, boxes and manholes located as indicated on drawings and at other locations required for splices, taps, wire pulling, equipment connections, and compliance with regulatory requirements. Raceway, boxes and manholes are shown in approximate locations unless dimensioned. Provide raceway to complete wiring system.

B. Underground more than 5 feet (1,500 mm) outside foundation wall: Provide thick wall non-metallic conduit.

C. Underground within 5 feet from foundation wall: Provide rigid steel or thick wall non-metallic conduit as indicated on the drawings.

D. In or Under Slab on Grade: Provide thick wall non-metallic conduit.

E. Outdoor Locations, Above Grade: Provide rigid steel conduit. Provide cast metal outlet, pull, and junction boxes.

F. In Slab above Grade: Provide rigid steel conduit. Provide cast boxes.

G. Exposed Dry Locations: Provide galvanized rigid steel conduit or intermediate metal conduit. Provide cast boxes.

H. Concealed Dry Locations: Provide electrical metallic tubing or intermediate metal conduit. Provide cast boxes.

I. Locations Subject to Corrosive Atmosphere: Provide PVC coated, galvanized rigid steel conduit.

1.5 CONTRACTOR SUBMITTALS

A. In accordance with Division 1 requirements.

B. Product Data: Submit for the following:
1. Rigid steel conduit.
2. PVC coated galvanized rigid steel conduit.
3. Intermediate metal conduit.
4. Electrical metallic tubing.
5. Flexible metal conduit.
6. Liquid tight flexible metal conduit.
7. Nonmetallic conduit.
8. Raceway fittings.
9. Conduit bodies.
10. Surface raceway.
11. Pull boxes, junction boxes and manholes.

C. Manufacturer's Installation Instructions: Submit application conditions and limitations of use stipulated by product testing agency specified under Regulatory Requirements. Include instructions for storage, handling, protection, examination, preparation, and installation of product.

1.6 CLOSEOUT SUBMITTALS

A. In accordance with Division 1 requirements.

B. Project Record Documents:
1. Record actual routing of conduits.
2. Record actual locations and mounting heights of outlet, pull boxes, junction boxes and manholes.

1.7 DELIVERY, STORAGE, AND HANDLING

A. In accordance with Division 1 requirements.

B. Protect conduit from corrosion and entrance of debris by storing above grade. Provide appropriate covering.

C. Protect PVC conduit from sunlight.

PART 2 PRODUCTS

2.1 CONDUIT

A. Size raceways per ANSI/NFPA 70, except as follows:
1. All indoor branch circuit raceway shall be a minimum of 3/4" Electrical Metallic Tubing (EMT), unless otherwise noted.
2. All raceway for Control circuits shall be a minimum of 1/2" EMT, unless otherwise noted.
3. All raceway for outdoor above grade circuits, feeder circuits, branch circuits larger than 2" and raceway in hazardous areas shall be Galvanized Rigid Steel Conduit (GRSC or RGS) unless otherwise noted.

B. Galvanized Rigid Steel Conduit (GRSC or RGS), couplings and elbows shall be hot-dip galvanized, rigid mild steel in accordance with ANSI C80.1 and UL 6. The conduit interior and exterior surfaces shall have a continuous zinc coating with a transparent overcoat of enamel, lacquer, or zinc chromate. Conduit shall be formed with continuous welded seams with a uniform wall thickness, in minimum 10-foot lengths, with threaded ends.

C. Plastic Coated Rigid Steel Conduit. Coating shall be applied under controlled factory conditions. Prior to coating conduit shall meet requirement of GRSC.

D. Intermediate Metal Conduit (IMC). Raceway shall be hot-dipped galvanized mild steel in accordance with ANSI C80.6 and UL 1242 and shall bear the UL label. Conduit shall have same characteristics of rigid steel except for thinner wall.

E. Electrical Metallic Tubing (EMT). Electrical metallic tubing, including elbows and bends, shall be zinc coated, mild steel in accordance with the requirements of ANSI C80.3 and UL 797. The interior and exterior surfaces of the tubing shall have a continuous zinc coating. Conduit shall be formed with a continuous welded seam, with a uniform wall thickness, in minimum 10-foot lengths.

F. Flexible Metal Conduit shall be galvanized steel or aluminum meeting the requirements of UL 1.

G. Liquid-Tight Flexible Metal Conduit shall be plastic-jacketed, galvanized steel, "Sealtite" Type EF for general service areas or Type HC for high-temperature when used under raised floor or in air plenums. Conduit shall be UL listed.

H. Non-Metallic Conduit shall be as follows:
1. Schedule 40 or 80: Conduit shall be 90 C, UL 651 listed, composed of polyvinyl chloride conforming to NEMA Standard TC-2.
2. Type EB: Conduit shall be Type EB for concrete encasement, UL listed, conforming to NEMA Standard TC-6.
3. Type DB: Conduit shall be Type DB for direct burial, UL listed, and conform to NEMA Standards TC-6.
4. Spacers used in duct bank installations shall be high impact plastic, interlocking bases, and intermediate type spacers. Place spacers between 7 and 10 feet apart.

2.2 CONDUIT FITTINGS

A. Couplings and Thread Protectors. Each length of threaded conduit shall be provided complete from the manufacturer with a coupling on one end and a thread protector on the other. The thread protector shall have sufficient mechanical strength to protect the threads during normal handling and storage.

B. Metal Conduit Fittings. All metal conduit fittings shall conform to the requirements of UL 514B where this standard applies. Galvanized iron or galvanized steel fittings shall be used with steel conduit. Zinc-coated steel fittings shall be used with steel tubing. EMT fittings shall be compression type, UL approved for rain tight applications, T&B 5X2X series, and setscrew type for indoor applications, T&B HT22X series, insulated throat. Threaded fittings shall engage a minimum of five threads made up wrench-tight and be compatible with conduit.

C. Liquid-Tight Flexible Conduit Fittings. All liquid-tight flexible conduit fittings shall be galvanized steel, T&B 53XX series insulated throat, and shall bear the UL label.

D. Flexible Metal Conduit Fittings. Flexible metal conduit fittings shall be galvanized steel, T&B Tite-Bite.

E. Non-Metallic Conduit Fittings. Fitting shall be of same material and strength characteristics as conduit and shall be solvent welded as recommended by manufacturer. Duct to steel adapters shall be provided as required. End bells shall be plastic, high impact, tapered to fit.

F. Special Fittings. Conduit sealing, explosion proof, dust proof, and other types of special fittings shall be provided as required by the drawings and these specifications and shall be consistent with the area and equipment with which they are associated. Fittings installed outdoors or in damp locations shall be sealed and gasketed. Outdoor fittings shall be of heavy cast construction. Hazardous area fittings and conduit sealing shall conform to NEC requirements for the area classification.

G. Bushings. Bushings shall be provided for the termination of all conduits not terminated in hubs, couplings or insulated throat connectors. Grounding type insulated bushings with insulating inserts in metal housings shall be provided for conduit 1-1/4 inches and larger. Standard bushings shall be galvanized steel or malleable iron in all sizes.

H. Locknuts. One interior and one exterior locknut shall be provided for all conduit terminations not provided with threaded hubs and couplings. Locknuts shall be designed to securely bond with the conduit to the box when tightened. Locknuts shall be so constructed that they will not be loosened by vibration.

I. Unions. Watertight conduit unions shall not be used on this project.

J. Raintight Conduit Hubs. Raintight conduit terminating hubs, where indicated on the drawings or required by these specifications, shall be Myer's rigid conduit hubs, or approved equal.

2.3 CONDUIT SUPPORTS

A. Conduit supports shall be furnished and installed in accordance with the drawings and these specifications. Conduits shall be supported so that fittings are accessible. Support systems shall be limited to electrical conduits only.

B. Hanger Rods. Hanger rods shall be 3/8-inch diameter galvanized threaded steel rods, minimum. Conduit racks over 18-inch wide, over one level, or supporting 2-inch GRSC or larger, shall be 1/2-inch diameter rod minimum.

C. Conduit Clamps. Conduits in single runs or groups of two shall be supported by cast metal clamps and clamp backs. They shall be galvanized malleable iron or approved equal cast ferrous metal for steel conduit or tubing.

D. Support Channels. Supports for banks of three of more conduits shall be constructed of support channels (Unistrut, Kindorf, Superstrut, B-Line or approved equal) with associated conduit or tubing clips. Support channels shall be steel, hot-dip galvanized after fabrication with galvanized steel clips for steel conduit or tubing.

2.4 OUTLET BOXES AND SWITCH BOXES

A. Sheet Metal Outlet Boxes: ANSI/NEMA OS 1, galvanized steel.

B. Luminaire and Equipment Supporting Boxes: Rated for weight of equipment supported, per NEC requirements.

C. Interior Outlet Boxes: Unless otherwise noted or shown, provide galvanized flat rolled sheet steel interior outlet wiring boxes of types, shapes and sizes, including box depths, to suit each respective location and installation; construct with stamped knockouts in back and sides, and with threaded screw holes with corrosion-resistant screws for securing box covers and wiring devices.

D. Outlet boxes used in wet outdoor locations, surface mounted shall be cast metal (FS or FD type) with mounting lugs and gasketed covers.

E. Interior Outlet Box Accessories: Provide outlet box accessories as required for each installation, including mounting brackets, wallboard hangers, extension rings, fixture studs, cable clamps and metal straps for supporting outlet boxes, which are compatible with outlet boxes being used and meeting requirements of individual wiring situations. Choice of accessories is installer's option.

2.5 MANUFACTURERS

A. Firms regularly engaged in the manufacturing of electrical raceways of the types and capacities required, whose products have been in satisfactory use in similar service for not less than 3 years.

2.6 CLOSURE FOAM

A. All conduit, raceways, cables and sleeves penetrations through fire rated and hazardous location walls, shafts, floor, ceilings, etc., shall be sealed with a UL-approved fire stopping system.

2.7 PULL BOXES AND JUNCTION BOXES

A. Sheet Metal Boxes: NEMA OS 1, NEMA rating as indicated on drawings.
   1. Material: Minimum 16 gage galvanized steel.
   2. Cover: Stainless steel hinged cover with neoprene gasket. Cover to be secured to the body with a continuous, full length, piano type hinge and stainless steel pin on one side and captive screw on the other side. Door to be equipped with padlock hasp with sealing hole provisions.
   3. Grounding Lug: Provide #10-32 tapped hole provisions for optional ground lug kit.
   4. Collar Studs: Provide 0.375-16 collar studs for mounting optional panel.
   5. Mounting: Provide external mounting feet for secure wall mounting.
   6. Finish: Wash and phosphate undercoat with ANSI 61 gray polyester power finish.

B. Surface-Mounted Cast Metal Box: NEMA 250, NEMA rating as indicated on drawings, flat-flanged, surface- mounted junction box:
   1. Material: Cast Iron.
   2. Cover: Furnish with ground flange, neoprene gasket, and stainless steel cover screws.

C. Concrete pull boxes for buried conduits shall be as specified in Section 02580.

PART 3 EXECUTION

3.1 EXAMINATION

A. Verify outlet locations and routing and termination locations of raceway prior to rough in.

3.2 EXISTING WORK

A. Extend existing raceway and box installations using materials and methods compatible with existing electrical installations, or as specified.

B. Clean and repair existing raceway and boxes to remain or to be reinstalled.

3.3 INSTALLATION OF RACEWAYS

A. Routing
1. Install raceway and boxes in accordance with NECA “Standard of Installation.”
2. Conduit routing shown on drawings is diagrammatic only. Contractor shall field route conduit and raceways between equipment and devices as required to obtain a complete wiring system.
3. Except as otherwise specified all conduit shall be installed in exposed runs parallel or perpendicular to dominant surfaces with right-angle turns made of symmetrical bends or fittings.
4. Conduit shall not be installed on the outside face of exposed columns, but shall be routed on the web or on the inside of a flange of the column.
5. Except where prevented by the location of other work, a single conduit or a conduit group shall be centered on structural members.
6. Conduit shall be located at least 6 inches from hot water or steam pipes and from other hot surfaces

B. Moisture Pockets
1. Moisture pockets shall be eliminated from conduits. If water cannot drain to the natural opening in the conduit system, a hole shall be drilled in the bottom of a pull box or a "C-type" conduit fitting provided in the low point of the conduit run.

C. Couplings and Unions
1. Metal conduit shall be joined by threaded conduit couplings, with the conduit ends butted. The use of running threads will not be permitted.
2. Erickson type couplings or similar unions will not be permitted.

D. Bends and Offsets
1. Changes in direction of conduits shall be made with fittings or bends.
2. Conduit bends shall meet the requirements of NEC or the bend radius other cable installed, whichever is more limiting, with no exception.
3. Bends shall be made using appropriate tools or mechanical equipment. The use of a pipe tee or vise for bending conduit or tubing will not be permitted.

4. For non-metallic conduit or plastic coated steel, approved factory bends and offsets shall be used.
5. Conduits or tubing deformed or crushed in any way shall be removed from the job site. Install no more than the equivalent of three 90 degree bends between boxes or outlets

E. Cutting and Threading
1. The plane of all conduit ends shall be square with the centerline.
2. Where threads are required, they shall be cut and cleaned prior to conduit reaming.
3. The ends of all conduit and tubing shall be reamed to remove all rough edges and burrs.
4. Cutting oil shall be used in threading operations; the dies shall be kept sharp, and provisions shall be made for chip clearance.
5. Threads on conduits and fittings shall be lubricated with conducting and sealing compound

F. All steel conduit, exposed to weather or in contact with earth, shall be coated after threading with "Zincilate 810", "Zinc Rich" coating or approved equal. The Contractor shall supply this protective material and shall apply it in the field.

G. Connections to Boxes and Cabinets
1. Conduit shall be securely fastened to all boxes and cabinets.
2. Threads on metallic conduit shall project through the wall of the box to allow the bushing to butt against the end of the conduit.
3. The locknuts, both inside and outside, shall then be tightened sufficiently to bond the conduit securely to the box.
4. Locknuts on EMT box connectors shall be tightened securely to bond the connectors.

H. All conduits entering enclosures outdoors or in wet areas shall enter through Myer’s hubs, or approved equal, or threaded openings.

I. Cleaning
1. Precautions shall be taken to prevent the accumulation of water, dirt, or concrete in the conduit.
2. Conduit in which water or other foreign materials have been permitted to accumulate shall be thoroughly cleaned or, where such accumulation cannot be removed by methods acceptable to the District, the conduit shall be replaced.

J. Empty Conduit
1. All conduits installed for future use shall have a pull line.

K. Rooftop Conduits
1. Provide redwood sleepers on waterproof mastic base for all conduit runs exposed on roofs.

L. Above 600-Volts

1. Conduits carrying conductors above 600-volts shall be identified with markers at 10 feet intervals indicating the voltage level and feeder designation.

M. Ground Wire
1. A solid or stranded bare copper or green insulated copper solid or stranded ground wire shall be provided in all conduits and raceways.

N. Galvanized Rigid Steel Conduit
1. Galvanized rigid steel conduit shall be installed in areas exposed to weather, vehicle traffic, in hazardous classified areas, for penetrations through foundations, and 10 feet before transition from below grade to 8 feet above grade, unless otherwise noted on the drawings.
2. Conduit in contact with earth shall be protected by "Scotchwrap" 10 mil tape applied in double thickness using 50% lap turns to 6 inches above grade and 6 inches beyond transition.
3. Expansion joints shall be used where required.

O. Plastic-Coated Rigid Steel Conduits
1. Plastic-coated, rigid steel conduit and fittings shall be installed where highly corrosive conditions exist, indoors or outdoors, as shown on the drawings.
2. The Contractor shall patch any damaged coating according to the manufacturer's instructions and to the satisfaction of the District.

P. Intermediate Metal Conduit
1. Rigid steel intermediate conduit may be installed in lieu of rigid steel conduit in all above ground areas where rigid steel conduit is permitted, except for wires over 600- volts, unless otherwise specified.

Q. Electrical Metallic Tubing
1. Electrical metallic tubing shall be installed for all circuits, indoors above concrete slab, where not subject to conditions outlined for rigid galvanized steel conduits.

R. Flexible Metal Conduit
1. Flexible conduit inserts not greater than 30 inches in length, shall be installed in all conduit runs, which are supported by both building steel and by structures subject to vibration or thermal expansion. This shall include locations where conduit supported by building steel enters or becomes supported by isolated structures on separate foundations.
2. Flexible conduit shall be installed in conduit runs, which cross expansion joints.
3. Special areas, such as plant office control rooms in which external noise is to be minimized, shall have flexible conduit in conduit runs where the runs cross from the main building framing to the control room or office framing.
4. Flexible conduit shall be installed adjacent to all equipment and devices, which move in relation to the supply conduit due to vibration, normal operation of the mechanism, or thermal expansion.

5. Conduit shall be connected to pressure switches, thermocouples, solenoids, and similar devices with flexible conduit. Flexible conduit shall be installed adjacent to the motor terminal housing for motors requiring 4-inch and smaller conduit.
6. Flexible metal conduit inserts not greater than 6 feet in length shall be installed for light fixture tap conductors.

S. Liquid-Tight Flexible Metal Conduit
1. Liquid-tight flexible metal conduit shall be used in place of regular flexible conduit for connections to motors and transformers, in areas exposed to weather, moisture or oil, and under raised floors.

T. Non-Metallic Conduit
1. Schedule 40 or 80 shall be used for all power, signal feeders and branch circuits, in earth or enclosed in concrete, unless otherwise noted on the drawings. Conduits must be buried in earth in accordance with the NEC.
2. Type EB. May be used in lieu of Schedule 40 or 80 if encased in concrete.
3. Type DB. May be used in lieu of Schedule 40 or 80 as direct buried.

U. Conduit Support
1. Support raceway using coated steel or malleable iron straps, lay-in adjustable hangers, clevis hangers, and split hangers.
2. Fasten conduit supports to building structures and surfaces in accordance with Section 16060.
3. Do not use wire, ceiling support wires or perforated pipe straps to support conduit. Remove any temporary installation support wire.

V. Spacing of Supports
1. Except where buried in concrete, all conduit runs shall be rigidly supported.
2. Each conduit shall be supported within 1 foot of junction boxes and fittings.
3. Support spacing along conduit runs shall be as follows.

Conduit Size	**Maximum Distance Between Supports**
½ inch through 1-1/4 inch	5 feet
1-1/2 inch and larger	10 feet

W. Ground and bond raceway and boxes in accordance with Section 16060.

3.4 CABINET AND BOX INSTALLATION

A. Install electrical boxes as shown on drawings, and as required for splices, taps, wire pulling, equipment connections and compliance with regulatory requirements.

B. Install electrical boxes to maintain headroom and to present neat mechanical appearance.

C. Install pull boxes and junction boxes above accessible ceilings and in unfinished areas only. In inaccessible ceiling areas, install outlet and junction boxes no more than 6 inches from ceiling access panel or from removable recessed luminaire.

D. Align adjacent wall mounted outlet boxes for switches, thermostats, and similar devices with each other.

E. Use flush mounting outlet boxes in finished areas.
   1. Do not install flush mounting boxes back-to-back in walls.
   2. Provide minimum 6-inch separation.
   3. Provide minimum 24-inch separation in acoustic rated walls.
   4. Secure flush mounting box to interior wall and partition studs.
   5. Accurately position to allow for surface finish thickness.
   6. Use stamped steel bridges to fasten flush mounting outlet box between studs.
   7. Install flush mounting box without damaging wall insulation or reducing its effectiveness.
   8. Use adjustable steel channel fasteners for hung ceiling outlet box.

F. Support boxes independently of conduits.

G. Use code sized gang box where more than one device is mounted together. Do not use sectional box. Use code sized gang box with plaster ring for single device outlets.

H. Use cast outlet box in exterior locations where exposed to the weather and wet locations (interior or exterior).

I. Large Pull Boxes - Boxes larger than 100 cubic inches in volume or 12 inches in any dimension.
   1. Interior Dry Locations - Use hinged enclosure.
   2. Other Locations - Use surface mounted box of appropriate location classification.

J. Coordinate installation of electrical boxes and fittings with cable and raceway installation work. Provide knockout closures to cap unused knockout holes where blanks have been removed.

K. Locate boxes and conduit bodies so as to ensure ready accessibility of electrical wiring.

L. Avoid using round boxes where conduit must enter box through side of box, which would result in difficult and insecure connections where fastened with a locknut or bushing on rounded surface.

M. Fasten boxes rigidly to substrate or structural surfaces to which they are being mounted, or solidly embed electrical boxes in concrete or masonry as appropriate.

N. Cabinets and boxes shall be rigidly mounted.

1. Mounting on concrete shall be secured by self-drilling anchors.
2. Mounting on steel shall be by drilled and tapped screw holes, or by special support channels welded to the steel, or by both.
3. Cabinets shall be leveled and fastened to the mounting surface with not less than ¼-inch air space between the enclosure and mounting surface.
4. All mounting holes in the enclosure shall be used.

O. Except as prevented by the location of other work, all junction boxes and outlet boxes shall be centered on structures.

P. Conduit openings in boxes shall be made with a hole saw or shall be punched.

3.5 BRACKETS

A. Bracket supports shall be used where specifically indicated. Other types of hangers acceptable to the District may also be used.

3.6 ANCHORS

A. Where supports for raceways, boxes, and cabinets are mounted on concrete surfaces, they shall be fastened with self-drilling tubular expansion shell anchors with externally split expansion shells, single-cone expanders, and annular break-off grooved chucking cones. Anchors shall be Phillips "Red Head" or approved equal.

3.7 ADJUSTING

A. Install knockout closures in unused openings in boxes.

3.8 CLEANING

A. In accordance with Division 1 requirements.

B. Clean interior of boxes to remove dust, debris, and other material.

C. Clean exposed surfaces and restore finish.

END OF SECTION

SECTION 16140

WIRING DEVICES

PART 1 GENERAL

1.1 SUMMARY

A. Wiring devices are defined as single discrete units of electrical distribution systems that are intended to carry but not utilize electric energy. The types of general purpose wiring devices required for the project include, but are not necessarily limited to the following line voltage devices:
   1. Receptacles
   2. Switches
   3. Wall plates
   4. Plugs
   5. Connectors

1.2 REFERENCE SPECIFICATIONS, CODES AND STANDARDS

A. NEMA WD 1 - General Purpose Wiring Devices

B. NEMA WD 6 - Wiring Device Configurations.

1.3 CONTRACTOR SUBMITTALS

A. In accordance with Division 1 requirements.

B. Product Information:
   1. Catalog cut of each device showing Manufacturer name, catalog number, voltage and current rating and dimensions.

1.4 QUALIFICATIONS

A. Manufacturer: Company specializing in manufacturing products specified in this Section with minimum five years experience.

B. Installer: A firm with at least five years of successful installation experience on projects with electrical installation work similar to that required for the project.

1.5 REGULATORY REQUIREMENTS

A. Furnish products listed and classified by Underwriters Laboratories, Inc. (UL), Electrical Testing Laboratories, Inc. (ETL), or other recognized, acceptable testing and listing agencies as suitable for the purpose specified and shown.

PART 2 PRODUCTS

2.1 GENERAL

A. Provide factory fabricated wiring devices in the type, color, electrical rating for service indicated, and/or as shown on the drawings.

2.2 MANUFACTURERS

A. Provide products produced by one of the following for each type of wiring device, or acceptable alternate:
   1. Appleton
   2. Hubbell Wiring Device Division
   3. Pass & Seymour
   4. Bryant Electric Co.
   5. Cooper Crouse-Hinds Co.
   6. Thomas & Betts
   7. Wiremold (multi-outlet assemblies)

2.3 WALL SWITCHES

A. Provide specification grade, quiet type, flush, 1-pole, 2-pole, three and four-way toggle switches rated 20 ampere, 120/277-volts AC, with mounting yoke insulated from mechanism equipped with plaster ears and side wired screw terminals, ivory plastic body with toggle handle, NEMA WD-1.
   1. Manufacturers: Hubbell, Pass & Seymour, Bryant

B. Provide specification grade, dimmer switches suitable for dimming LED lights rated 20 ampere, 120/277-volts AC, with mounting yoke insulated from mechanism equipped with plaster ears and side wired screw terminals, ivory plastic body with toggle handle, NEMA WD-1.
   1. Manufacturers: Hubbell, Pass & Seymour, Bryant

2.4 RECEPTACLES

A. Provide specification grade, grounding type, heavy-duty receptacles with ivory plastic body, green hexagonal equipment ground screw terminal and grounding poles internally connected to mounting yoke; metal plaster ears; side wiring NEMA WD-6 as follows:
   1. Two pole, 3 wire, 20-ampere, 125-volt duplex receptacle, NEMA configuration 5-20R unless otherwise indicated.
   2. GFCI Receptacle: Two pole, 3 wire, 20-ampere, 125-volt duplex receptacle with integral ground fault circuit interrupter to meet regulatory requirements.
   3. Two pole, 3 wire, 20-ampere, 125-volt single receptacle, twist-lock, NEMA configuration L5-20R as indicated.
   4. Two pole, 3 wire, 20-ampere, 250-volt single receptacle, twist-lock, NEMA configuration L6-20R as indicated.
   5. Two pole, 3 wire, 20-ampere, 277-volt single receptacle, twist-lock, NEMA configuration L7-20R as indicated.

6. Two pole, 3 wire, 30-ampere, 125-volt single receptacle, twist-lock, NEMA configuration L5-30R as indicated.
7. Two pole, 3 wire, 30-ampere, 250-volt single receptacle, twist-lock, NEMA configuration L6-30R as indicated.
8. Two pole, 3 wire, 30-ampere, 277-volt single receptacle, twist-lock, NEMA configuration L7-30R as indicated.
9. Three phase, 4 wire, 20-ampere, 125/250-volt single receptacle, twist-lock, NEMA configuration L14-20R as indicated.
10. Three phase, 4 wire, 20-ampere, 250-volt single receptacle, twist-lock, NEMA configuration L15-20R as indicated.
11. Three phase, 4 wire, 20-ampere, 480-volt single receptacle, twist-lock, NEMA configuration L16-20R as indicated.
12. Three pole, 4 wire, 30-ampere, 125/250-volt single receptacle, twist-lock, NEMA configuration L14-30R as indicated.
13. Three pole, 4 wire, 30-ampere, 250-volt single receptacle, twist-lock, NEMA configuration L15-30R as indicated.
14. Special Purpose Receptacle: Type as required meeting the requirements of this Section and the equipment shown on the drawings and elsewhere specified.

2.5 PLUGS AND CONNECTORS

A. Comply with NEMA Standards Publication No. WD-1. Provide 20 ampere, 125-volts, bakelite body connectors, 3-wire grounding, parallel blades, double wipe contact, with cord clamp.

B. Matching Insulgrip, corrosion resistant nylon plugs, IP20, shall be provided for each twist-lock type receptacles unless indicated otherwise.

C. Manufacturers: Hubbell, Pass & Seymour, Bryant

2.6 WALL PLATES

A. Decorative Cover Plate: High impact, smooth nylon and smooth satin finish. Color of nylon cover plate shall be ivory unless noted otherwise.

B. For areas where two separate power sources are provided, each power source receptacle shall have a different color cover plate such as black, gray, or brown. Emergency power source receptacles shall have a red cover plate.

C. Weatherproof Cover Plate: Gasketed cast metal with hinged gasketed device cover.

2.7 MULTI-OUTLET ASSEMBLIES

A. Provide fixed multi-outlet assemblies consisting of grounding type, 20 ampere, 125-volt, two poles, three wire receptacles as an integral part, on 12-inch centers, unless otherwise noted.

B. Where more than one circuit is indicated, do not connect adjacent receptacles to the same circuit. Include raceway snap-on covers with punched holes to accurately align receptacles.

PART 3 EXECUTION

3.1 EXAMINATION

A. Verify outlet boxes are installed at proper height.

B. Verify wall openings are neatly cut and will be completely covered by wall plates.

C. Verify branch circuit wiring installation is completed, tested, and ready for connection to wiring devices.

D. Inspect each item of materials or equipment immediately prior to installation, and reject damaged and defective items.

3.2 PREPARATION

A. Provide extension rings to bring outlet boxes flush with finished surface, if necessary.

B. Clean debris from all boxes.

3.3 INSTALLATION

A. Install wiring devices where indicated, in accordance with the manufacturer's written instructions, the applicable requirements of the NEC and the NECA "Standard of Installation", and in accordance with recognized industry practices to ensure that products serve the intended function.

B. Where installations include manufacturer's products, comply with the manufacturer's applicable instructions and recommendations for installation, to whatever extent these are more explicit or more stringent than applicable requirements indicated in the contract documents.
   1. Install devices plumb and level. Install switches with OFF position down
   2. Install vertically oriented grounded receptacles with grounding pole on bottom
   3. Connect wiring device grounding terminal to metallic outlet box with bonding jumper
   4. Connect isolated ground (IG) receptacle equipment (yoke) grounding terminal only at metallic box with bonding jumper
   5. Install decorative plates on switch, receptacle, and blank outlets in finished areas
   6. Install galvanized steel plates on outlet boxes and junction boxes in unfinished areas, above accessible ceilings, and on surface mounted outlets in utility areas. (Does not include multi-outlet assemblies, other similar locations.).

3.4 INTERFACE WITH OTHER PRODUCTS

A. Coordinate locations of outlet boxes to obtain mounting heights compliant with ADA.

B. Install wall switch at 48 inches to top of the maximum reach above finished floor for forward reach applications, 54 inches to top of reach for side reach applications. The lower reach shall be at or above 15 inches for forward reach and for side reach, unless otherwise noted.

C. Install convenience receptacle 15 inches to center above finished floor, unless otherwise noted.

D. Install convenience receptacle 6 inches to center above backsplash of counter, unless otherwise noted.

E. Install dimmer 48 inches to center above finished floor, unless otherwise noted.

F. Install telephone and/or data jacks 15 inches to center above finished floor, unless otherwise noted.

G. Install telephone jack for wall telephone 48 inches to top of reach above finished floor for forward reach applications, and 54 inches above finished floor to top of reach for side reach applications to comply with the ADA. Receiver hook shall not be above 54 inches to its highest point above finished floor.

3.5 FIELD QUALITY CONTROL

A. Inspect each wiring device for defects.

B. Operate each wall switch with circuit energized and verify proper operation.

C. Verify that each receptacle device is energized.

D. Test each receptacle device for proper polarity.

E. Test each GFCI receptacle device for proper operation.

F. Verify that each telephone and data jack is properly connected and circuit is operational.

3.6 ADJUSTING

A. Adjust devices and wall plates to be flush, plumb and level.

END OF SECTION

THIS PAGE
WAS INTENTIONALLY
LEFT BLANK

SECTION 16210

ELECTRIC UTILITY SERVICES

PART 1 GENERAL

1.1 SUMMARY

A. The existing underground 15-kV electrical service from the Utility pole to the Utility transformer has to be relocated to facilitate installing the generator building. Arrange and coordinate with utility company to relocate/reroute the existing underground 15-kV conduits.

B. The existing Utility service metering and main will remain.

1.2 CONTRACTOR SUBMITTALS

A. In accordance with Division 1 requirements.

B. Submit copy of main switchboard equipment drawings to utility company for their review and approval prior to fabrication of the equipment.

1.3 QUALITY ASSURANCE

A. Perform Work in accordance with utility company written requirements.

B. Maintain one copy of each document on site.

1.4 FIELD MEASUREMENTS

A. Verify field measurements are as indicated.

1.5 COORDINATION

A. Coordinate relocation of the underground lines with Silicon Valley Power (utility company).

B. The utility Co. will disconnect, remove and re-install the 15-kV underground service cable between the existing power pole and the utility transformer. Coordination the relocation of the underground duct bank with the utility service representative - Mr. _____ at (___) _____.

PART 2 PRODUCTS

2.1 SERVICE DESCRIPTION

A. Service Entrance: 480-volt, 3-phase underground service entrance from the Silicon Valley Power (SVC) service transformer to the building service entrance equipment as indicated on drawings. Existing. No change required.

B. Utility Raceway Connection: Secondary service main disconnect circuit breaker id existing. Reconnect the service main disconnect circuit breaker to feed new Service Equipment.

C. Utility Service-Entrance Conductor Connection: Existing. No change required.

2.2 UTILITY METERS

A. Utility revenue meter is existing.

2.3 UTILITY METER BASE

A. Utility Meter is existing.

PART 3 EXECUTION

3.1 EXAMINATION

A. In accordance with Division 1 requirements.

B. Verify that service equipment is ready to be connected and energized.

3.2 EXISTING WORK

A. Ensure access to existing service equipment, boxes, metering equipment, and other installations which remain active and which require access.

B. Extend existing service installations using materials and methods compatible with existing electrical installations, or as otherwise specified.

C. Disconnect and remove existing conductor gallery and equipment after new service equipment is operational.

3.3 INSTALLATION

A. Install new service conduits from service main disconnect circuit breaker to new Main switchgear equipment.

B. Utility company will provide and install and connect the 15-kV rated primary service cables between the service pole and service transformer after the underground conduits are relocated by the contractor.

END OF SECTION

SECTION 16235

ENGINE-GENERATOR UNIT

PART 1 GENERAL

1.1 SUMMARY

A. Section includes equipment and services necessary for the design, manufacture, factory testing, installation, and site testing of a complete and operable on-site emergency generator unit including radiator, exhaust silencer, sub-base fuel tank, leak-detection system, control panel, battery, charger and sound attenuating radiator baffle.

B. Related Sections:
   1. Section 16413 – Enclosed Transfer Switch.

1.2 REFERENCE SPECIFICATIONS, CODES AND STANDARDS

A. IEC 8528 - Control Systems for Generator Sets - Part 4.

B. IEC – Std. 801.2 for susceptibility, conducted, and radiated electromagnetic emissions.

C. IEC – Std. 801.3 for susceptibility, conducted, and radiated electromagnetic emissions.

D. IEC – Std. 801.5 for susceptibility, conducted, and radiated electromagnetic emissions.

E. IEEE 446 - Recommended Practice for Emergency and Standby Power Systems for Commercial and Industrial Applications

F. IEEE 587 - Voltage surge resistance.

G. NEMA AB 1 - Molded Case Circuit Breakers.

H. NEMA ICS 10 - AC Generator sets, Industrial Control and Systems: AC Transfer Switch Equipment.

I. NEMA MG 1 - Motors and Generators.

J. NEMA 250 - Enclosures for Electrical Equipment (1000 Volts Maximum.)

K. NETA ATS - Acceptance Testing Specifications for Electrical Power Distribution Equipment and Systems.

L. NFPA 30 - Flammable and Combustible Liquids Code.

M. NFPA 70 - National Electrical Code. Equipment shall be suitable for use in systems in compliance to Article 700, 701, and 702.

N. NFPA 110 - Emergency and Standby Power Systems.

O. UL 508 – Standard for Control Equipment.

P. UL 142 – Standard for Generator-Base Tanks.

Q. UL 2085 - Special Purpose Flammable Liquid Secondary-Containment Generator-Base Tank.

R. UL 2200 - Standard for Stationary Engine Generator Assemblies.

1.3 CONTRACTOR SUBMITTALS

A. In accordance with Division 1 requirements.

B. Shop Drawings:
1. Electrical characteristics and connection requirements.
2. Plan and elevation views of unit including overall dimensions.
3. Electrical and fuel oil piping interconnection point with dimensions.
4. Fuel consumption rate curves at various loads.
5. Ventilation and combustion air requirements.
6. Electrical schematic and interconnection diagrams.
7. Sub-base fuel tank details and dimensions.
8. Overall unit dimensions and seismic anchoring points with dimensions.
9. Enclosure sound rating.
10. Emissions report.

C. Product Data:
1. Submit data showing dimensions, weights, ratings, interconnection points, and internal wiring diagrams for engine, generator, control panel, battery, battery rack, battery charger, exhaust silencer, vibration isolators, sub-base fuel tank, and radiator.
2. Submit two (2) sets of product data, certification, test reports and other necessary information, for engine-generator unit and sub-base fuel tank, to the local city Fire Marshall for approval and permit. Obtain Fire Marshal approval for the sub-base fuel tank assembly.
3. Submit calculations and enclosure pad-mount anchoring method (anchor bolt size, embedment and assembly details) to meet California seismic Zone 4 requirements.

D. Certification and Test Reports:
1. Provide four (4) copies of Certification for the Protected Sub-Base fuel tank.
2. Provide four (4) copies of results of manufacturer’s certification of performance testing.

E. Manufacturer’s Field Report:
1. Provide four (4) copies of test and inspection report with detailed findings and recommendations.

1.4 CLOSEOUT SUBMITTALS

A. In accordance with Division 1 requirements.

B. Operation and Maintenance Data:
   1. Submit five copies of bound instructions and service manuals for normal operation, routine maintenance, oil sampling and analysis for engine wear, and engine- maintenance procedures.
   2. Submit five copies of source and field quality control reports.

1.5 QUALIFICATIONS

A. Manufacturer: Company specializing in manufacturing products specified in this section with minimum three years' experience and with service facilities within 50 miles of project.

B. Supplier: Authorized distributor of specified manufacturer with minimum three years' experience.

1.6 WARRANTY

A. In accordance with Division 1 requirements.

B. Furnish two (2) year manufacturer warranty, from acceptance date, for defective parts and labor to install parts, in accordance with these contract documents.

1.7 MAINTENANCE SERVICE

A. In accordance with Division 1 requirements.

B. Provide servicing and maintenance bond for engine-generator unit in accordance with the approved O&M manuals and manufacturer's recommendations, for a period of two (2) years from acceptance date.

1.8 MAINTENANCE MATERIALS

A. In accordance with Division 1 requirements. - Spare parts and maintenance products.

B. Furnish one set of tools required for preventive maintenance of engine-generator system. Package tools in adequately sized metal toolbox.

C. Furnish two of each: fuel, oil and air filter elements.

PART 2 PRODUCTS

2.1 ENGINE

A. Manufacturers:
   1. Cummins/Onan
   2. Caterpillar

3. Approved equal.

B. Emissions Permit: The Owner has submitted an application to the Bay Area Air Quality Management District based on the Caterpillar Model 400-EKW engine with 927.56 cu. in. displacement and 619 bhp maximum rated output with EPA Tier 3 emission levels.
   1. If another engine generator unit is proposed, submit pertinent information and emissions data to amend the application and procure an operation permit from the Bay Area Air Quality Management District (BAAQMD), at no additional cost to the District.

C. Product Description: Diesel, 4-cycle, radiator- and fan-cooled, compression-ignition internal combustion engine.

D. Standby Rating: As indicated on drawings in an ambient of 105 degrees F (40 degrees C) at elevation of 50 feet (15 meters) above mean sea level.

E. Fuel System: No. 2 diesel oil.

F. Engine speed: 1,800 rpm.

G. Safety Devices: Engine shutdown on high water temperature, low oil pressure, over speed, and engine over crank. Limits as selected by manufacturer.

H. Engine Starting: DC starting system with positive engagement, voltage of starter motors in accordance with manufacturer's instructions. Furnish remote starting control circuit with MANUAL-OFF-REMOTE selector switch on engine-generator control panel.

I. Engine Jacket Heater: Thermal circulation-type water heater with integral thermostatic control, sized to maintain engine jacket water at 90 degrees F (32 degrees C), and suitable for operation on 120-Volt, single-phase power supply.

J. Radiator: Radiator using glycol coolant, with blower type fan, sized to maintain safe engine temperature in ambient temperature of 105 degrees F (40 degrees C). Radiator airflow restriction 0.5 inches of water (1.25 Pa) maximum.

K. Engine Accessories: Fuel filter, lube oil filter, intake air filter, lube oil cooler, fuel transfer pump, fuel priming pump, engine-driven water pump. Furnish fuel pressure gage, water temperature gage, and lube oil pressure gage on engine-generator control panel.

L. Mounting: Heavy-duty steel base to maintain alignment between components. The base shall incorporate a battery tray with hold-down clamps within the rails. Furnish unit with suitable spring-type vibration isolators. Provide mounting bolts sized for Seismic Zone 4 installation.

2.2 GENERATOR

A. Product Description: 400-kW, 480-Volt, 60 Hz. NEMA MG1, three-phase, re-connectable, brushless synchronous generator with brushless exciter.

B. Voltage Rating: As indicated on drawings.

C. Insulation Class: H.

D. Temperature Rise: 130 degrees C standby.

E. Enclosure: NEMA MG1, open drip proof.

F. The generator shall be rated for delivering output KVA at rated frequency and power factor, at any voltage not more than 5% above or below rated voltage.

G. A permanent Magnet generator (PMG) shall be included to provide a reliable source of excitation power for optimum motor starting and short circuit performance. The PMG and controls shall be capable of sustaining and regulating current supplied to the single phase or three-phase fault at approximately 300% of rated current for not more than 10 seconds.

H. The generator set shall meet all requirements for NFPA 110 Level 1 systems. Level 1 prototype tests required by this standard shall have been performed on a complete and functional unit; component level type tests will not substitute for this requirement.

I. The engine generator unit shall be listed to meet UL 2200 or submit to an independent third party certification process to verify compliance as installed.

2.3 VOLTAGE REGULATION

A. Furnish generator-mounted volts per hertz exciter-regulator to match engine and generator characteristics, with voltage regulation plus or minus 1 percent from no load to full load. Furnish manual controls to adjust voltage droop, voltage level (plus or minus 5 percent) and voltage gain.

2.4 GOVERNOR

A. Product Description: Electronic governor to maintain engine speed within 0.5 percent, steady state, and 5 percent, no load to full load, with recovery to steady state within 2 seconds following sudden load changes. Equip governor with means for manual operation and adjustment.

2.5 ENGINE GENERATOR SET CONTROL

A. Product Description: Microprocessor-based digital control system, designed to provide governing, voltage regulation, metering, protective relaying, automatic starting, monitoring, and control functions for the generator unit.

B. Control System shall be designed to allow local monitoring and control of the generator unit and remote monitoring and control as described in these specifications.

C. Control system shall be mounted on the generator unit. The control shall be vibration isolated and prototype tested to verify the durability of all components in

the system under the vibration condition encountered. The entire control system of the generator set shall be UL 508 listed and labeled. The entire control shall be tested and meet the requirements of IEEE 587 for voltage surge resistance. Manufacturers utilizing components that have not been tested as a system, as installed, (as demonstrated by a statement of performance on standard published literature) shall conduct RFI/EMI testing on the equipment in the manufacturer's facility prior to shipping the equipment to the project job site. Voltage surge testing shall be performed on an identical prototype unit.

D. Control voltage shall be 24 volts DC. Generator set governing, voltage regulation, protection, and control equipment shall be capable of proper operation with the battery voltage levels down to 18 VDC, and continuously at voltage levels up to 34 VDC.

E. All switches, lamps and meters shall be oil-tight and dust-tight, and the enclosure door shall be gasketed.

F. All switches shall be provided with fully illuminated backlit labels, and all metering shall be individually lighted to allow for easy reading of functions in a completely dark room.

G. All adjustments to the control system shall be made from the front of the generator set control panel, with the aid of a digital readout display integral to the equipment. No rotary pots shall be acceptable for any function of the control system provided for the generator set.

H. Control equipment shall contain a system of diagnostic LEDs to assist in analyzing proper system function.

I. The entire generator set control system as supplied shall be capable of being directly monitored and controlled by a personal computer connected to the control for monitoring, diagnosis, service, and adjustment of the system.

J. The generator set mounted control shall include the following features and functions:
   1. Three- (3) position selector switch labeled RUN/OFF/AUTO. In the RUN position the generator shall automatically start, and accelerate to rated speed and voltage. In the OFF position the generator shall immediately stop, bypassing all time delays. In the AUTO position the generator set shall be ready to accept a signal from a remote device to start and accelerate to rated speed and voltage.
   2. Red "mushroom-head" push-button EMERGENCY STOP switch. Depressing the emergency stop switch shall cause the generator set to immediately shut down and be locked out from automatic restarting. Reset of the control shall require reset of the emergency stop switch and the control system.
   3. Push-button RESET switch. The RESET switch shall be used to clear a fault and allow restarting the generator set after it has shut down for any fault condition.
   4. Push-button PANEL LAMP switch. Depressing the panel lamp switch shall cause the entire panel to be lighted with DC control power. The

panel lamps shall automatically be switched off 10 minutes after the switch is depressed or after the switch is depressed a second time. Lamps shall be LED type.

5. Push-button LAMP TEST switch. Depressing the lamp test switch shall cause all the alarm and status lamps on the panel to be lighted, and cause the digital display panel to sequentially display all the alarm and status messages in the control system.

K. Emergency Generator Control Panel shall be NEMA 250, Type 1 generator-mounted control panel enclosure with engine and generator controls and indicators. Furnish provision for padlock and the following equipment features:

1. Frequency Meter: 45-65 Hz range, digital display preferred (or 3.5-inch dial).
2. AC Output Voltmeter: digital display preferred (or 3.5-inch dial), 2 percent accuracy, with phase selector switch.
3. AC Output Ammeter: digital display preferred (or 3.5-inch dial), 2 percent accuracy, with phase selector switch.
4. Output voltage adjustment.
5. Push-to-test indicator lamps, one each for low oil pressure, high water temperature, over speed, and over crank.
6. Engine Start/Stop selector switch.
7. Engine running time meter.
8. Oil pressure gage.
9. Water temperature gage.
10. Auxiliary Relay: Three Pole Double Throw (3-PDT) operates when engine runs with contact terminals pre-wired to terminal strip.
11. Additional visual indicators and alarms in accordance with by NFPA 110.
12. Remote Alarm Contacts: Factory-wired SPDT contacts to terminal strip for remote alarm functions in accordance with NFPA 110.
13. High Battery voltage alarm.
14. Low Battery voltage alarm.
15. Low Fuel alarm.
16. System ready.
17. Anticipatory high water temperature.
18. Anticipatory low oil pressure.
19. Low coolant temperature.
20. Switch in Off Position alarm.
21. Over crank alarm.
22. Emergency Stop alarm.
23. High Water temperature alarm.
24. Over speed alarm.
25. Low Oil Pressure alarm.
26. Line power available.

L. Alarms: Provide wiring and conduit between PLC, ATS and engine-generator alarm points for a complete operating system. Provide display windows with 3/8-inch engraved black letters on white background for each annunciated alarm. Provide at least one spare blank window for future use.

1. Engine Run.
2. Engine Trouble.
3. High Fuel Alarm

4. Low Fuel Alarm
5. Engine Over speed shutdown
6. Fuel Leak in secondary containment tank
7. All other critical shut down function as recommended by the EG unit manufacturer
8. Spares

M. Power Source: 120-VAC. Provide 20 amp, single pole, circuit breaker in existing panelboard. Provide conduit and wire from power source.

2.6 GENERATOR SET AND ENGINE CONTROL FUNCTIONS

A. The control system provides shall include cycle cranking system, which allows for user selected crank time, rest time, and number of cycles. Initial setting shall be 3 cranking periods of 15 seconds each, with 15 second rest period between cranking periods.

B. The control system shall include an idle mode control, which allows the engine to run in idle mode in the RUN position only. In this mode, the alternator excitation system shall be disabled and the engine protection parameters for engine oil pressure and engine temperature shall be reduced to proper levels to reflect the lower engine operating speed.

C. The control system shall include the engine governor control, which functions to provide steady state frequency regulation as noted elsewhere in this specification.

D. The governor control shall include adjustments for gain, damping, and a ramping function to control engine speed and limit the exhaust smoke while the unit is starting. The control system shall automatically adjust governor gain and stability settings to compensate for engine performance variation related to engine temperature.

E. The control system shall include time delay start (adjustable 0-300 seconds) and time delay stop (adjustable 0-600 seconds) functions. Indicators shall be provided to reflect that the time delays are in operation, and the time remaining for completion of the time delay period.

F. The starting control logic shall check for engine rotation at each signal for the engine starter to run. If the engine rotation is not present when the starter is operating, a “fail to crank” alarm and shutdown shall be indicated on the generator set control panel.

G. The control system shall include sender failure monitoring logic for speed sensing, oil pressure, and engine temperature that is capable of discriminating between failed sender or wiring components, and actual engine failure conditions.

H. Generator set start contacts shall be rated 10 amps at 32 VDC.

I. Cool down time delay, adjustable 0-600 seconds. The control panel shall indicate the remaining time delay period when the generator set is timing for shutdown.

J. Start time delay, adjustable 1-300 seconds. The control panel shall indicate the time remaining in the time delay period when the generator set is timing for start.

K. A battery monitoring system shall be provided which initiates alarms when the DC control and starting voltage is less than 15 VDC or more than 32VDC. During engine starting, the low voltage limit shall be disabled, and the system shall conduct a battery capacity test. A 'weak battery" alarm shall be initiated if the starting/control battery does not pass this test.

2.7 SUB-BASE FUEL TANK

A. Product Description: Factory-fabricated, protected, secondary contained, sub-base fuel tank with dual integral float-controlled valve and pump, with a maximum capacity of 650 US gallons.

B. Tank Construction:
1. Dual wall, corrosion resistant steel tank.
2. Internal tank shall be listed and constructed in accordance with UL 142.
3. Inner and outer steel tank shall be constructed of a minimum 3/16-inch thick A-36 Hot Rolled Steel.
4. Tank and anchoring methods shall meet seismic Zone 4.
5. The internal tank shall be pressure tested and pass a test of 5 psi at the factory.
6. The tank shall be designed with an over spill containment.
7. The tank shall include atmospheric and engine- venting nozzles sized to UL requirements.
8. The tank shall have signs and labels to meet applicable codes, including "Flammable", "No Smoking", product content, and tank capacity.
9. Each nozzle on the tank shall be identified for its intended use.
10. The tank shall be designed to meet weight loads of the engine-generator set.
11. The tank shall be designed with earthquake, hurricane, and flood tie down points.

C. Tank Painting:
1. Tank shall be sand blasted to commercial sandblast standards.
2. Prime coat shall be an industrial primer.
3. Exposed exterior surface finishing coat shall be petroleum-resistant two-part paint, same color as the generator enclosure.
4. Bottom of tank shall be coated with coal-tar epoxy.

D. Certification: Based on the manufacturer's published literature, the proposed generator based fuel tank shall have the following certifications:
1. The internal and external tank shall be constructed in accordance with UL 142.
2. The tank shall have an identifying UL nameplate attached with the following:

a. This tank is intended for installation in accordance with NFPA 30, NFPA 30A, NFPA 31, NFPA 37, NFPA 110
b. Tank serial number, manufacturer's name, location and telephone number, date of manufacture, model number of tank, and maximum generator weight.
c. Primary tank capacity in gallons, containment percentage.
d. "Tank requires emergency relief venting, capacity not less than (to be provided by fuel tank vendor) cubic feet per hour, PRIMARY TANK AND (to be provided by vendor) feet per hour ANNULAR SPACE."
e. "Tank is intended for stationary installation only. Tank shall be inspected to determine suitability after fire exposure."
f. "For Diesel Fuel Only."
g. "Pressurized Primary Tank When Pressure Testing Annular Space. Follow Installation Instructions."

E. Furnish flexible fuel line connections, fuel gage, check valve, high fuel level alarm contact, and indicating light.

F. Provide fuel fill valve to be accessible from outside the emergency generator enclosure. The fill valve shall be at or below the overfill vent level. Provide a five (5) gallon fuel spill containment enclosure with lockable cover as required by the local agency.

G. Conform to NFPA 30.

H. Controls:
1. Monitoring: Low-level control and alarm, high level control and alarm, leak- detection monitoring and alarm system.
2. Low Level Alarm Sensor: Separate device to operate alarm contacts at 25 percent of normal fuel level.
3. High Level Alarm Sensor: Separate device to operate alarm and redundant fuel shutoff contacts at 98 percent of normal fuel level.
4. Piping connections: Include fuel suction and return lines, local fuel fill, vent line, overflow line, and tank drain line complete with shutoff valve.
5. Redundant High-Level Fuel Shutoff: Actuated by the high-level alarm sensor in primary tank. Shutoff action shall initiate an alarm signal to control panel but shall not shut down engine-generator unit.

I. Leak Detection System:
1. Calibrated leak detection and monitoring system with probes, sensors, switches and remote alarm panel located in the engine-generator unit enclosure.
2. Locate leak detection switch in rupture basin and connect to provide audible and visual alarm in the event of sub-base tank leak.
3. Provide alarm contacts for remote indication and alarm of a fuel leak.

J. Fuel Oil:
1. Provide 600 gallons of No. 2 diesel fuel oil for commissioning and testing of the engine-generator unit.

2.8 ACCESSORIES

A. Exhaust Silencer: Critical-type silencer, with muffler companion flanges and flexible stainless steel exhaust fitting, sized in accordance with engine manufacturer's instructions. Maximum noise level allowed is 63 dBA at 23 feet.

B. Radiator Baffle: Sound attenuating baffle designed to reduce transmitted engine noise through the cooling air to no more than 63 dBA at 23 feet from the cooling air outlet. Radiator baffle shall not present a static backpressure in excess of 1/2-inch water column.

C. Metal Roof Thimble: Where unit is installed indoors, provide ventilated metal roof thimble for all high temperature (greater than 100 degrees C) wall, ceiling and roof penetrations.

D. Batteries: Heavy-duty, diesel-starting deep cycle gel pack/absorption glass-mat (AGM) type storage batteries, 24 volts, sized as recommended by the engine-generator manufacturer. Match battery voltage to starting system. Furnish cables and clamps.

E. Battery Tray: Treated for electrolyte resistance; constructed to contain spillage.

F. Battery Charger: Solid state to operate with type of batteries furnished. Current limiting type designed to float at 2.17 volts for each cell and equalize at 2.33 volts for each cell. Furnish overload protection, full wave rectifier, DC voltmeter and ammeter, and fused input. Furnish enclosure to meet NEMA 250, Type 1 requirements.

G. Line Circuit Breaker: NEMA AB 1, molded case circuit breaker on generator output with integral thermal and instantaneous magnetic trip in each pole. Furnish battery voltage operated shunt trip, connected to open circuit breaker on engine failure. Unit mount in enclosure to meet NEMA 250, Type 1 requirements.

2.9 SOURCE QUALITY CONTROL

A. Provide shop inspection and testing of completed assembly.

B. Make completed engine-generator assembly available for inspection at manufacturer's factory prior to packaging for shipment. Notify Engineer at least seven (7) days before inspection is allowed.

C. Allow witnessing of factory inspections and tests at manufacturer's test facility. Notify Engineer at least seven (7) days before inspections and tests are scheduled.

PART 3 EXECUTION

3.1 INSTALLATION

A. Install engraved plastic nameplates in accordance with Section 16075.

B. Ground and bond generator and other electrical system components in accordance with Section 16060.

3.2 FIELD QUALITY CONTROL

A. Inspect and test in accordance with NETA ATS, Section 7.22.

3.3 MANUFACTURER'S FIELD SERVICES

A. Engage the services of a factory-authorized service representative to inspect field-assembled components and equipment installation, including piping and electrical connections, and to assist in testing. Report results in writing. Testing of tanks shall be witnessed by the Santa Clara Fire Department.

B. Testing:
1. Perform field quality control testing under the supervision of the manufacturer's factory-authorized service representative.
2. Provide No. 2 diesel fuel and lubricating oil for all testing.

C. Tests: Include the following:
1. Tests recommended by manufacturer.
2. Adjust generator output voltage and engine speed to meet specified ratings.
3. International Electrical Testing Association Tests: Perform each visual and mechanical inspection, and electrical and mechanical test stated in NETA ATS for engine-generator sets, except omit vibration baseline test. Certify compliance with test parameters for tests performed.
4. NFPA 110 Acceptance Tests: Perform Single-step full-load pickup test.
5. Exhaust-System Backpressure Test: Use a manometer with a scale exceeding 40 inches water gauge (120 kPa). Connect to exhaust line close to engine exhaust manifold. Verify that backpressure at full-rated load is within manufacturer's written allowable limits for the engine.
6. Exhaust Emissions Test: Comply with applicable government test criteria.

D. Coordinate tests for engine-generator with tests for automatic transfer switch, and run them concurrently. Run complete electrical test, including, but not limited to, automatic transfer switch and generator control panel to ensure proper automatic Start-Stop operation. Coordinate testing with Automatic Transfer Switch field service representative.

E. Retest: Correct deficiencies identified by tests and observations, and retest until specified requirements are met.

F. Report results of tests and inspections in writing. Record adjustable relay settings and measured insulation resistances, time delays, and other values and observations. Attach a label or tag to each tested component indicating satisfactory completion of tests. Provide certified copies of field tests approved and signed by the authorized service representative.

3.4 DEMONSTRATION AND TRAINING

A. Provide four (4) hours of training and instruction for at least four persons, to be conducted at project site with manufacturer's certified field service representative. Instruction shall include handouts to all trainees, procedures for the proper operation, adjustments and maintenance of the engine-generator system.

B. Simulate operation of the engine-generator in manual mode, test mode and automatic mode by interrupting normal power source, and demonstrate that system operates to provide engine generator power.

3.5 CLEANING

A. In accordance with Division 1 requirements.

B. Clean engine and generator surfaces. Replace oil and fuel filters with new filters after unit testing and prior to acceptance of the project.

C. On completion of installation, inspect system components. Remove paint splatters and other spots, dirt, and debris. Repair damaged finish to match original finish. Clean components internally using methods and materials recommended by manufacturer.

D. Refill fuel tank to replace fuel consumed during testing.

END OF SECTION

THIS PAGE
WAS INTENTIONALLY
LEFT BLANK

SECTION 16413

ENCLOSED TRANSFER SWITCH

PART 1 GENERAL

1.1 SUMMARY

A. Section includes automatic and non-automatic transfer switches in individual enclosures.

1.2 RELATED SECTIONS

A. Section 16060 – Basic Electrical Materials and Methods

B. Section 16075 – Electrical Equipment Identification.

1.3 REFERENCE SPECIFICATIONS, CODES AND STANDARDS

A. NEMA ICS 6 – Enclosures.

B. NEMA ICS 10 - AC Transfer Switch Equipment.

C. NFPA 110 – Emergency Standby Power Systems.

D. NFPA 70 – National Electrical Code.

E. UL 1008 - Transfer Switch Equipment.

1.4 SERVICE CONDITIONS

A. Temperature: -40 to +50 degrees C

B. Relative Humidity: up to 95 percent

C. Altitude: 10 feet (2 meters) above sea level

1.5 CONTRACTOR SUBMITTALS

A. In accordance with Division 1 requirements.

B. Product Data: Submit catalog sheets showing voltage, switch size, ratings and size of switching and overcurrent protective devices, operating logic, short- circuit ratings, dimensions, and enclosure details.

C. Test Reports: Indicate results of manufacturer’s certification of performance testing.

D. Manufacturer’s Field Report: Indicate inspections, findings, and recommendations.

1.6 CLOSEOUT SUBMITTALS

A. In accordance with Division 1 requirements.

B. Operation and Maintenance Data: Submit instructions and service manuals for normal operation and routine maintenance. List special tools, maintenance materials, and replacement parts.

1.7 QUALIFICATIONS

A. Manufacturer: Company shall specialize in manufacturing the products specified in this section with minimum five (5) years' experience and with service facilities within 50 miles of project.

B. Supplier: Authorized distributor of specified manufacturer with minimum five (5) years' experience.

1.8 MAINTENANCE SERVICE

A. In accordance with Division 1 requirements.

B. Furnish service and maintenance of transfer switches for one year from Date of Substantial Completion.

1.9 WARRANTY

A. Furnish two (2) year manufacturer's warranty from acceptance date for defective parts and labor to install the part.

PART 2 PRODUCTS

2.1 AUTOMATIC TRANSFER SWITCH

A. Description: NEMA ICS 10, automatic transfer switch suitable for use in standby systems as described in NFPA 70 and shall conform to NFPA 110. Manual operator conforming to UL 1008 shall be provided and switch shall be designed for safe operations under full load conditions.

B. Configuration: Electrically operated, mechanically held in both operating positions.

C. Rating: Voltage and current rating as indicated on drawings, continuous duty 3 pole with solid neutral. Neutral contact continuous current rating shall be not less than twice the rating of main or phase contacts.

D. Interrupting Capacity: 100 percent of continuous rating.

E. Withstand Current Rating: 30,000 RMS symmetrical amperes when used with molded case circuit breaker. Contacts shall be non-welding when used with upstream feeder overcurrent device of available fault current specified.

F. Product Features:
   1. Main transfer switch contacts shall be visible for inspection without disassembly and/or removal of any parts or barriers. Arc guards constructed of transparent materials suitable for use in this application are acceptable.
   2. Indicating Lights: Mount on front panel of switchboard to indicate NORMAL SOURCE AVAILABLE, ALTERNATE SOURCE AVAILABLE and switch position.
   3. Test Switch: Mount on front panel of switchboard to simulate failure of normal source.
   4. Return to Normal Switch Mount on front panel of switchboard to initiate manual transfer from alternate source to normal source.
   5. Auxiliary Contacts: Provide the following discrete output signals, rated at no less than 10 amps at 120 volts, 60 Hz.
      a. Loss of utility power
      b. Preferred source active
      c. Alternate source active
      d. Any additional control signals as required to control a standby engine generator and as indicated on drawings.
   6. Preferred Source Monitor: Monitor normal source voltage and frequency; initiate transfer when voltage drops below 85 percent or frequency varies more than 3 percent from rated nominal value.
   7. Alternate Source Monitor: Monitor alternate source voltage and frequency; inhibit transfer when voltage is below 85 percent or frequency varies more than 3 percent from rated nominal value.

G. Automatic Sequence of Operation:
   1. Initiate Time Delay to Start Alternate Source Engine Generator: Upon initiation by normal source monitor.
   2. Time Delay to Start Alternate Source Engine Generator: 0.5 to 6 seconds, adjustable, and factory set at 1 second.
   3. Initiate Transfer Load to Alternate Source: Upon initiation by preferred source monitor and permission by alternate source monitor.
   4. Time Delay before Transfer to Alternate Power Source: 0 to 5 minutes, adjustable, and factory set at 0 minutes.
   5. Initiate Retransfer Load to Normal Source: Upon permission by preferred source monitor.
   6. Time Delay before Transfer to Preferred Power Source: 0 to 30 minutes, adjustable, and factory set at 5 minutes. Time delay shall be automatically defeated in event of alternate source failure, provided preferred source is available.
   7. Time Delay before Engine Shutdown: 0 to 30 minutes, adjustable, of unloaded operation, factory set at 10 minutes.
   8. Engine Exerciser: Provide a generator exerciser timer. Run times shall be user programmable. The exerciser shall be selectable between load transfer and engine run only and shall have a fail-safe feature that will retransfer the switch to preferred source during exercise period. Bypass exerciser control when normal source fails during exercising.

2.2 NON-AUTOMATIC TRANSFER SWITCH

A. Product Description: NEMA ICS 10, non-automatic transfer switch suitable for use in standby systems as described in NFPA 70 and shall conform to NFPA 110. Switch shall be designed for safe operation under full load conditions. Manual operation conforming to UL 1008.

B. Voltage and current rating as indicated on drawings, continuous duty 3 pole with solid neutral.

C. Interrupting Capacity: 100 percent of continuous rating.

D. Withstand Current Rating: 30,000 RMS symmetrical amperes minimum. Contacts shall be non-welding when used with upstream feeder overcurrent device of available fault current specified.

E. Product Features:
   1. Mechanical interlock to prevent interconnection of normal and alternate sources of supply in any configuration.
   2. Transfer operation of switch shall not require any tools or external devices.
   3. Active source shall be readily apparent without opening enclosure or the removal of any parts or barriers.

2.3 ENCLOSURE

A. NEMA ICS 6, type as indicated on drawings in accordance with UL 1008.

B. The transfer switch enclosures shall be front aligned with the Main Distribution Switchboard and the Motor Control Center (MCC) equipment.

C. Finish:
   1. Manufacturer’s standard light gray enamel over external surfaces. Coat internal surfaces with a minimum of one coat of corrosion-resistant paint, or plate with cadmium or zinc.

2.4 SOURCE QUALITY CONTROL

A. Insulation resistance test to insure integrity and continuity of entire system.

B. Main switch contact resistance test.

C. Mechanical test to verify switch is free of mechanical hindrances.

D. Electrical tests to verify complete control operation and to set up time delays and voltage sensing settings as applicable.

PART 3 EXECUTION

3.1 INSTALLATION

A. Switch shall be installed in accordance with approved manufacturer's instructions.

B. Install engraved plastic nameplates in accordance with Section 16075 – Electrical Equipment Identification.

3.2 MANUFACTURER'S FIELD SERVICES

A. In accordance with Division 1 requirements.

B. Engage the services of a factory-authorized service representative to inspect field-assembled components and equipment installation, including phasing, electrical connections, and to assist in testing. Report results in writing.

3.3 FIELD QUALITY CONTROL

A. Following completion of switch installation and after making proper adjustments and settings, site tests shall be performed to demonstrate each switch function as specified. Minimum operational tests shall include:
   1. Insulation resistance shall be tested, both phase-to-phase and phase-to-ground.
   2. Power failure of normal source shall be simulated by opening upstream protective device. This test shall be performed a minimum of five times.
   3. Power failure of emergency source with normal source available shall be simulated by opening upstream protective device for emergency source. This test shall be performed a minimum of five times.
   4. Low phase-to-ground voltage shall be simulated for each phase of normal source.
   5. Operation and settings shall be verified for specified switch features, such as override time delay, transfer time delay, return time delay, engine shutdown time delay, exerciser, auxiliary contacts, and supplemental features.

END OF SECTION

THIS PAGE
WAS INTENTIONALLY
LEFT BLANK

SECTION 16441

SWITCHBOARD

PART 1 GENERAL

1.1 SUMMARY

A. This Section includes providing and installing a Main Distribution Switchboard.

1.2 RELATED SECTIONS:

A. Section 16060 – Basic Electrical Materials and Methods.

B. Section 16413 – Enclosed Transfer Switch

C. Section 16210 – Electric Utility Services

D. Section 16442 – 600-Volt Rated Panel Board and Circuit Breakers

E. Section 16443 – Motor Control Center

F. Section 16461 – Dry Type Transformer

1.3 REFERENCE SPECIFICATIONS, CODES AND STANDARDS

A. ANSI C12.1 - Code for Electricity Metering.

B. ANSI C57.13 - Instrument Transformers.

C. NEMA ICS 6 – Enclosures.

D. NEMA CU 1 – Fuses.

E. NEMA PB 2 - Dead Front Distribution Switchboards.

F. NEMA PB 2.1 - Proper Handling, Installation, Operation and Maintenance of Dead front Switchboards Rated 600 Volts or less.

G. NETA ATS - Acceptance Testing Specifications for Electrical Power Distribution Equipment and Systems.

H. NFPA 70 – National Electrical Code.

1.4 CONTRACTOR SUBMITTALS

A. In accordance with Division 1 requirements.

B. Shop Drawings:
   1. Provide front and side views of enclosures, with overall dimensions shown; conduit entrance locations and requirements; nameplate legends;

size and number of bus bars for each phase, neutral, and ground; and switchboard instrument details.

2. Provide detailed drawings of the service cable entrance compartment, main circuit breaker compartment, instrument transformer and metering compartment.
3. Submit service cable entrance, instrument transformer and metering compartment drawings to utility company for review and approval prior to release for fabrication and construction.
4. Submit calculations and enclosure pad-mount anchoring method (anchor bolt size, embedment, and assembly details) to meet California Seismic Zone IV requirements.

C. Product Data: Submit electrical characteristics, including voltage, frame size and trip ratings, fault current withstand ratings, and time-current curves of equipment and components.

1.5 CLOSEOUT SUBMITTALS

A. In accordance with Division 1 requirements.

B. Project Record Documents: Record actual locations, configurations, and ratings of switchboards and their components on single line diagrams and plan layouts.

C. Operation and Maintenance Data: Submit spare parts data listing, source and current prices of replacement parts and supplies, and recommended maintenance procedures and intervals.

1.6 QUALIFICATIONS

A. Manufacturer: Company specializing in manufacturing products specified in this section with minimum three (3) years' experience.

1.7 DELIVERY, STORAGE, AND HANDLING

A. In accordance with Division 1 requirements.

B. Deliver in convenient width shipping splits, individually wrapped for protection and mounted on shipping skids.

C. Accept switchboard on site. Inspect for damage.

D. Store in clean, dry space. Maintain factory wrapping or provide additional canvas or plastic cover to protect units from dirt, water, construction debris, and traffic. Provide heaters to prevent condensation during storage.

E. Handle in accordance with NEMA PB 2.1. Lift only with lugs provided. Handle carefully to avoid damage to switchboard internal components, enclosure, and finish.

1.8 ENVIRONMENTAL REQUIREMENTS

A. In accordance with Division 1 requirements.

B. Conform to NEMA PB 2 service conditions during and after installation of switchboards.

1.9 FIELD MEASUREMENTS

A. Verify field measurements prior to fabrication.

PART 2 PRODUCTS

2.1 MAIN SWITCHBOARD

A. Description: NEMA PB 2, enclosed switchboard rated 480/277-volts, 800-amps, 3-phase, 4-wire, 22 KAIC equipped with main and branch circuit breakers as indicated on Drawings. Switchboard shall be designed and appropriate for use in a heavy-duty industrial area.

B. Enclosure: NEMA ICS 6, type as indicated on drawings. Align all sections at front.

C. Finish: Manufacturer's standard light gray enamel over external surfaces. Coat internal surfaces with a minimum of one coat of corrosion-resistant paint, or plate with cadmium or zinc.

D. Main Bus:
1. Material: Insulated Copper with tin plating, standard size. Provide minimum 1,000 ampere per square inch copper bus density.
2. Connections: Bolted, accessible from front only for maintenance.

E. Ground Bus: Extend length of switchboard. Ground bus rating shall meet requirements of NFPA 70 for indicated main bus rating.

F. Pull Section: Top feed, integral with metering section, or as indicated on Drawings, and in accordance with Utility requirements.

G. Transfer Switch Compartment: Furnish an enclosed transfer switch as indicated on drawings and in accordance with the requirements of Section 16413 – Enclosed Transfer Switch.

H. Control Power Transformer and Panel board: 600-volt rated dry type transformer as specified in Section 16461 - Dry Type Transformer with primary protective circuit breaker; branch circuit panelboard as specified in Section 16442 – 600-volt Rated Panelboards and Circuit Breakers.

I. Line and Load Terminations: Accessible from front only of switchboard, suitable for conductor materials and sizes as indicated on Drawings.

J. Future Provisions: Fully equipped spaces for future devices with bussing and bus connections insulated and braced for short circuit currents.

2.2 MANUFACTURERS

A. Cutler-Hammer.

B. General Electric.

C. Siemens.

D. Square D.

E. Approved equal manufacturer.

2.3 MOLDED CASE CIRCUIT BREAKER

A. Description: Molded-case circuit breaker as specified in Section 16442 - 600-volt Rated Panelboards and Circuit Breakers. Suitable for use as service equipment as described in NFPA 70.

2.4 METERING TRANSFORMERS

A. Current Transformers: ANSI C57.13; 5-ampere secondary, with single secondary winding and secondary shorting device, primary to secondary ratio to match bus ampacity or as indicated on drawings, burden and accuracy consistent with connected metering and relay devices, 60 Hertz.

B. Potential Transformers: ANSI C57.13; 120-volt secondary with single secondary winding, disconnecting type with integral NEMA FU 1 fuse mountings in both primary legs and one secondary leg, primary to secondary ratio to match bus voltage or as indicated on the drawings, burden and accuracy consistent with connected metering and relay devices, 60 Hertz.

2.5 CURENT AND VOLTAGE TRANSDUCERS

A. AC-True RMS transducer.
   1. Input: 0 to 5-ampere or 0-150 volts as appropriate.
   2. Rated Output: Proportional 0 –20 mA
   3. External Power: 100 - 130 VAC
   4. Accuracy: +/- 0.5% of Span
   5. Operating Temperature: 0 – 50 degrees Celsius
   6. Output Ripple Peak: < 1% of Span
   7. Standard Calibration: +/- 20% of span (minimum), +/- 5% of zero point (minimum)
   8. Frequency: 55 – 65 Hertz
   9. Stability: +/- 0.15% of span, Non-cumulative
   10. Isolation: Complete (Input, Output, power and case)

2.6 DIGITAL POWER METER

A. Description: Front display, panel mounted, direct reading, LED, LCD or vacuum fluorescent readout.

B. Manufacturer:
1. Square D Company – PowerLogic PM650
2. Cutler Hammer – IQ 330
3. Approved equal

C. Features:
1. Current (A, B, C, N)
2. Volts L-L (A-B, B-C, C-A)
3. Volts L-N (A-N, B-N, C-N)
4. Real Power – kW (A, B, C, total)
5. Reactive Power – kVAR (A, B, C, total)
6. Apparent Power – kVA (A, B, C, total)
7. Power Factor, True (A, B, C, total)
8. Frequency
9. Real Energy – kWh (3 phase total)
10. Reactive Energy – kVARh (3-phase total)
11. Apparent Energy – kVAh (3-phase total)
12. Energy Accumulation Mode –Signed, Absolute, energy in, energy out
13. Digital outputs configurable as KYZ or alarms.
14. Communications – Modbus RTU
15. THD – Voltage and Current (A, B, C)
16. Current Demand (A, B, C, present and peak)
17. Power Demand – kWd, kVARd, kVAd (3-phase total, present and peak)
18. Date/Time stamping (Peak demands, power up/restart, resets)
19. Downloadable firmware
20. Revenue Accuracy, ANSI C12.1
21. UL Listed
22. Voltage Input, Direct Connect - 600-Volts
23. Current Input – from external CT’s

2.7 SOURCE QUALITY CONTROL

A. Furnish shop inspection and testing in accordance with NEMA PB 2.

PART 3 EXECUTION

3.1 EXAMINATION

A. Verify that surface is suitable for switchboard installation.

3.2 INSTALLATION

A. Install in accordance with NEMA PB 2.1.

B. Tighten accessible bus connections and mechanical fasteners after placing switchboard.

C. Install engraved plastic nameplates in accordance with Section 16060.

D. Ground and bond switchboards in accordance with Section 16060.

3.3 FIELD QUALITY CONTROL

A. In accordance with Division 1 Requirements.

B. Perform inspections and tests listed in NETA ATS Section 7.1 for Switchgear and Switchboard Assemblies, as follows:
   1. Visual and mechanical inspection
      a. Compare equipment nameplate data with drawings and specifications.
      b. Inspect physical, electrical, and mechanical condition.
      c. Confirm correct application of manufacturer's recommended lubricants.
      d. Verify appropriate anchorage, required area clearances, physical damage, and correct alignment.
      e. Inspect all door panels, and sections for paint, dents, scratches, fit, and missing hardware.
      f. Verify that fuses and/or circuit breaker sizes and types correspond to drawings.
      g. Verify that current and voltage (potential) transformer ratios correspond to drawings.
      h. Verify tightness of accessible bolted electrical connections by calibrated torque-wrench method in accordance with manufacturer's published data or NETA ATS Table 10.12.
      i. Confirm correct operation and sequencing of electrical and mechanical interlock systems.
      j. Attempt closure on locked-open devices. Attempt to open locked-closed devices.
      k. Clean Switchboard.
      l. Inspect insulators for evidence of physical damage or contaminated surfaces.
      m. Exercise all active components.
      n. Verify that air filters are in place and /or vents are clear
   2. Electrical Tests
      a. Perform ground-resistance testing accordance with NETA ATS Section 7-13.
      b. Perform resistance tests through all bus joints with a low-resistance ohmmeter. Any joints that cannot be directly measured due to permanently installed insulation wrap shall be indirectly measured from closest accessible connection.
   3. Test Values
      a. Compare bus connection resistance to values of similar connections.
      b. Bolt-torque levels shall be in accordance with NETA ATS Table 10.12 unless otherwise specified by manufacturer.

C. Check phase rotation of all connected loads prior to removal of existing equipment and after new equipment is installed.

3.4 ADJUSTING

A. In accordance with Division 1 requirements.

B. Tighten bolted bus connections.

3.5 CLEANING

A. Touch up scratched or marred surfaces to match original finish.

B. Remove dust, loose dirt, sand and grit from interior of switchboard.

END OF SECTION

THIS PAGE
WAS INTENTIONALLY
LEFT BLANK

SECTION 16442

600-VOLT RATED PANEL BOARDS AND CIRCUIT BREAKERS

PART 1 GENERAL

1.1 SUMMARY

A. This Section includes distribution and branch circuit panelboards and circuit breakers.

1.2 RELATED SECTIONS

A. Section 16060 - Basic Electrical Materials and Methods.

B. Section 16075 – Electrical Equipment Identification.

C. Section 16413 – Enclosed Transfer Switch

D. Section 16441 – Switchboard

E. Section 16443 – Motor Control Center

1.3 REFERENCE SPECIFICATIONS, CODES AND STANDARDS

A. IEEE C2 – National Electrical Safety Code.

B. NECA - Standard of Installation.

C. NEMA AB 1 - Molded Case Circuit Breakers.

D. NEMA ICS 6 - Enclosures

E. NEMA PB 1 - Panelboards.

F. NEMA PB 1.1 - Instructions for Safe Installation, Operation and Maintenance of Panelboards Rated 600 Volts or Less.

G. NETA ATS - Acceptance Testing Specifications for Electrical Power Distribution Equipment and Systems.

H. NFPA 70 – National Electrical Code.

1.4 CONTRACTOR SUBMITTALS

A. In accordance with Division 1 requirements.

B. Shop Drawings: Indicate outline and support point dimensions, voltage, main bus ampacity, integrated short circuit ampere rating, circuit breaker and fusible switch arrangement and sizes.

C. Product Data: Submit catalog data showing specified features of standard products.

1.5 CLOSEOUT SUBMITTALS

A. Project Record Documents: Record actual locations of panelboards and record actual circuiting arrangements.

B. Operation and Maintenance Data: Submit spare parts listing; source and current prices of replacement parts and supplies; and recommended maintenance procedures and intervals.

1.6 QUALIFICATIONS

A. Manufacturer: Company specializing in manufacturing products specified in this section with minimum three years experience.

1.7 MAINTENANCE MATERIALS

A. Furnish two of each panelboard key. Panelboards keyed alike to Owner’s current keying system.

PART 2 PRODUCTS

2.1 DISTRIBUTION AND BRANCH CIRCUIT PANELBOARDS

A. Description: NEMA PB 1, circuit breaker type distribution, lighting and appliance branch circuit panelboard.

B. Manufacturers:
1. Cutler Hammer.
2. Siemens.
3. Square D Co.
4. General Electric Co.

C. Service Conditions:
1. Temperature: 104 degrees F (40 degrees C) ambient
2. Altitude: 100 feet (35 m) above sea level.

D. Panelboard Bus
1. Copper current carrying components, ratings as indicated on drawings
2. Furnish copper ground bus in each panelboard.

E. Minimum integrated short circuit rating
1. Panelboards rated 240-Volts - 22,000 amperes RMS symmetrical, or as indicated on drawings.
2. Panelboards rated 480-Volts - 42,000 amperes RMS symmetrical, or as indicated on drawings.

F. Enclosure: NEMA ICS 6, Type 1, gasketed, steel construction, minimum 6 inches deep, 20 inches wide suitable for flush or surface mounting as indicated on drawings.
   1. Flush or surface cabinet front with concealed trim clamps, concealed hinge, metal directory frame, and flush lock keyed alike.
   2. Fully hinged door with flush lock and metal directory frame.
   3. Finish with manufacturer's standard gray enamel.

2.2 MOLDED CASE CIRCUIT BREAKERS

A. NEMA AB 1, bolt-on type thermal magnetic and instantaneous magnetic trip circuit breaker. Circuit breaker thermal elements shall be of the bimetallic type and shall be capable of withstanding sustained overload and short-circuit currents without injury and without affecting the calibration of the bimetallic element. The thermal element shall have inverse time characteristics. The instantaneous elements shall trip the circuit breaker at the minimum standard trip setting.

B. Provide common trip handle for multiple pole circuit breakers.

C. Provide type SWD circuit breakers for lighting circuits and type HACR circuit breakers for air conditioning equipment circuits.

D. Class A ground fault interrupter circuit breakers as indicated on drawings.

E. Trip rating as indicated on drawings.

F. Circuit breaker interrupting rating shall meet or exceed the panel interrupting rating. Series rated circuit breakers are not acceptable.

PART 3 EXECUTION

3.1 EXISTING WORK

A. Disconnect and remove abandoned panelboards. Verify all branch circuits are no longer in use before disconnecting.

B. Maintain access to existing panelboard that remain active and require access. Modify installation or provide access panel.

C. Clean and repair existing panelboards to remain or to be reinstalled.

3.2 INSTALLATION

A. Install panelboards in accordance with NEMA PB 1.1 and NECA "Standard of Installation", NFPA 70 and IEEE C2.

B. Install panelboards plumb.

C. Install recessed panelboards flush with wall finishes.

D. Mounting height: 6 feet (1,800 mm) to top of panelboard. Install panelboards taller than 6 feet (1,800 mm) with bottom no more than 4 inches (100 mm) above floor.

E. Install filler plates for unused spaces in panelboards.

F. Provide typed circuit directory for each panelboard. Revise directory to reflect circuiting changes to balance phase loads.

G. Install engraved plastic nameplates in accordance with Section 16075 – Electrical Equipment Identification.

H. Ground and bond panelboard enclosure according to Section 16060. Connect equipment ground bars of panels in accordance with NFPA 70.

3.3 FIELD QUALITY CONTROL

A. Inspect and test in accordance with NETA ATS as outlined below:
   1. Visual and Mechanical Inspection:
      a. Compare equipment nameplate data with drawings and specifications.
      b. Inspect physical and mechanical condition.
      c. Verify appropriate anchorage, required area clearances, physical damage, and correct alignment.
      d. Inspect all doors, panels, and sections for corrosion, dents, scratches, fit, and missing hardware.
      e. Verify that fuse and/or circuit breaker sizes and types correspond to drawings.
      f. Perform circuit breaker inspections and operation test.

3.4 ADJUSTING

A. Rearrange circuits in panelboard to balance phase loads to within 20 percent of each other.

B. Maintain proper phasing for multi-wire branch circuits.

END OF SECTION

SECTION 16443

MOTOR CONTROL CENTER

PART 1 GENERAL

1.1 SUMMARY

A. This section covers the furnishing and installation of motor control center equipment, motor starters, controls, and accessories.

1.2 RELATED SECTIONS

A. Section 16060 – Basic Electrical Materials and Methods

B. Section 16075 –Electrical Equipment Identification

C. Section 16413 – Enclosed Transfer Switch

D. Section 16441 - Switchboard

E. Section 16442 – 600-Volt Rated Panelboard and Circuit Breakers

1.3 REFERENCE SPECIFICATIONS, CODES AND STANDARDS

A. ANSI C37.17 – Trip Devices for AC and General Purpose DC Low Volume Power Circuit Breakers.

B. IEEE 142 - Recommended Practice for Grounding of Industrial and Commercial Power Systems.

C. NECA - Standard of Installation.

D. NEMA ICS 2 - Industrial Control Devices, Controllers and Assemblies

E. NEMA ICS 2.3 - Instructions for the Handling, Installation, Operation, and Maintenance of Motor Control Centers

F. NEMA ICS 3 - Industrial Control and Systems: Factory Built Assemblies

G. NEMA ICS 4 - Industrial Control and Systems: Terminal Blocks

H. NEMA ICS 5 - Industrial Control and Systems: Control Circuit and Pilot Devices

I. NEMA ICS 6 - Industrial Control and Systems: Enclosures

J. NETA ATS - Acceptance Testing Specifications for Electrical Power Distribution Equipment and Systems

K. NFPA 70 - National Electrical Code

L. UL 94 – Tests for Flammability of Plastic Materials for Part in Devices and Appliances.

M. UL 845 - Electrical Motor Control Center

1.4 CONTRACTOR SUBMITTALS

A. In accordance with Division 1 requirements.

B. Shop Drawings:
1. Submit Motor Control Center front elevation, side views and plan view showing overall dimensions, conduit entrance locations, circuit breaker and motor starter arrangement and enclosure details including support point
2. Submit electrical characteristics including voltage rating, ampacity of horizontal and vertical main bus, neutral bus and ground bus, integrated short circuit ampere rating, starter size, circuit breaker frame size and trip ratings, and name plate legends
3. Submit single line diagrams, interconnection diagrams, connection diagrams, control logic diagrams, point-to-point wiring diagrams and front panel elevation.
4. Submit complete elementary and schematic wiring diagrams with all wires numbered for all control systems.
5. Submit calculations and enclosure pad-mount anchoring method (anchor bolt size, embedment and assembly details) to meet California seismic Zone 4 requirements.
6. Submit a complete description of motor control center prime and finish painting, including paint manufacturers and types, paint colors, painting processes, and dry film thicknesses.

C. Product Data:
1. Submit catalog sheets showing voltage, ratings and size of all motor control center components.
2. Submit circuit breaker time-current characteristic curves and overload relay thermal element (heater strip) time-current characteristic curves.

D. Certification and Test Reports: Indicate results of manufacturer’s certification of performance testing and submit certified copies of test results of all standard routine factory tests including quality control tests

1.5 REGULATORY REQUIREMENTS

A. Equipment shall conform to the requirements of NFPA 70, NEMA ICS2 and UL845.

B. Furnish products listed and classified by Underwriters Laboratories, Inc. (UL), Electrical Testing Laboratories, Inc. (ETL), or other recognized, acceptable testing and listing agencies as suitable for the purpose specified and shown.

1.6 DELIVERY, STORAGE, AND HANDLING

A. In accordance with Division 1 requirements.

B. Deliver in 60-inch maximum width shipping splits, individually wrapped for protection, and mounted on shipping skids.

C. Store in a clean, dry space. Maintain factory wrapping or provide an additional heavy canvas or heavy plastic cover to protect units from dirt, water, construction debris, and traffic.

D. Handle in accordance with NEMA ICS 2.3. Lift only with lugs provided for the purpose. Handle carefully to avoid damage to motor control center components, enclosure, and finish.

1.7 CLOSEOUT SUBMITTALS

A. In accordance with Division 1 requirements.

B. Project Record Documents: Product Data and shop drawings as described under Submittals.

C. Operation and Maintenance Data: Submit instructions and service manuals for normal operation and routine maintenance. List special tools, maintenance materials, and replacement parts. Include complete information for tightening of all electrical connections secured with bolts or studs.

D. Furnish as-built elementary and schematic drawings with all manufacturer's equipment, control panels, devices, etc., in detail on the elementary diagram with all terminal points of such equipment indicated.

E. Manufacturer's Field Report: Indicate inspections, findings, and recommendations.

1.8 WARRANTY

A. Furnish two (2) year manufacturer's warranty from start-up and acceptance date for defective parts and labor to install the part.

1.9 QUALIFICATIONS

A. Manufacturers proposing to furnish equipment under this specification shall have been manufacturing motor control centers for at least the most recent five (5) years.

B. Supplier: Authorized distributor of specified manufacturer with minimum five (5) years' experience with that manufacturer's products.

1.10 FIELD MEASUREMENTS

A. Verify field measurements prior to fabrication

PART 2 PRODUCTS

2.1 MANUFACTURERS

A. The following is a list of acceptable manufacturers for the motor control center.
   1. Allen-Bradley
   2. Cutler Hammer
   3. Siemens Energy & Automation, Inc.
   4. Square D Company

2.2 MOTOR CONTROL CENTER

A. General
   1. The motor control center shall be designed and constructed for use on a 480 volt, three-phase, four-wire, 60 Hz, solidly grounded system.
   2. Except as specified otherwise herein all equipment shall be designed for service below 3,000 feet above sea level at an ambient temperature of 40°C maximum.

B. Construction
   1. Motor control center equipment shall be mounted in compartmented vertical sections fabricated of steel and assembled to provide a rigid self-supporting structure. Each vertical section shall be nominally 90 inches high, 20 inches wide and 20 inches deep. Thickness of the steel sheets shall be not less than the thickness specified in UL 845, Table 1.
      a. All iron and steel components of the motor control center shall be protected against corrosion by methods specified in UL 845.
      b. Manufacturer's standard fasteners for removable panels consisting of screw type fasteners that are inserted in captive nuts held in place by nut retainer clips will be acceptable. Contractor shall furnish 100 percent replacement nuts and nut retainer clips as spare parts.
      c. Contractor shall furnish 100 percent replacement screw type fasteners if they are of a non-captive type and 50 percent replacement of screw type fasteners if they are of a captive type.
      d. Lifting angles shall be furnished on the top of each motor control center shipping section.
   2. Enclosure. The motor control center enclosure shall be NEMA ICS 6, gasketed.
   3. Wire Troughs. Horizontal wire troughs shall be located at the top and bottom of each section, aligned and located to provide a continuous wire way of the same cross-sectional dimensions throughout the length of the assembled motor control center. A vertical wire trough equipped with wire ties shall extend the full height of each section.
   4. Compartments. Each motor control section shall accommodate not more than six NEMA Size 1 full voltage, single speed, non-reversing combination motor starters. All individual compartments shall be isolated from each other by metal barriers when the units are assembled in the operating position and when the units are removed or replaced in the section structure. All section compartments shall be front accessible only.

5. Doors. Gasketed and hinged doors shall be provided on the front of each compartment. Doors shall be designed to allow easy maintenance or replacement of all devices from the front. A separate hinged and gasketed full-height door shall be furnished on the front of each section to allow access to the vertical wire trough without opening any starter unit or feeder tap unit door.
6. Equipped Spare. A compartment designated as "Spare" shall be furnished complete with stab-ins, guide rails, guide rail supports, starter unit or feeder tap unit, doors and all control devices and other hardware to permit connection of a load.
7. Space. Blank unassigned compartments shall be complete with vertical bus and removable covers over all openings between the unit compartment and the bus, but shall not include stab-ins, guide rails, guide rail supports, etc.
8. Future Additions and Modifications. The ends of each end vertical section shall be arranged to allow the future installation of similar sections. Each section shall be arranged to allow the removal, addition, interchange, or replacement of individual units as may be required.

C. Circuit Breakers. Each compartment not designated as “space” shall include one (1) three-pole, single-throw, 600-volt, molded-case air circuit breaker with RMS symmetrical interrupting rating to match MCC main bus in accordance with the requirements of Section 16442 – 600-Volt Panelboards and Circuit Breakers.
1. All circuit breakers shall be of the same manufacture throughout the composite motor control center assembly.
2. Manual operating handles shall be furnished on the access doors of the compartment to operate the circuit breaker. Provisions shall be made for padlocking each handle in the open position. Each operating handle shall indicate when the breaker has tripped automatically.
3. Access doors shall be interlocked with the operating handles to prevent opening the doors normally when the circuit breakers are in the CLOSED position. Provisions shall be made for overriding this interlock.

D. Bussing
1. Main and Neutral Bus. The motor control center main horizontal and vertical busses shall be insulated copper designed to continuously carry the full load rated current as specified, without exceeding temperature rise requirements.
   a. The bus shall be installed with rigid, non-tracking, fire-resistant, and non-hygroscopic molded insulating supports with high dielectric strength and high creepage surface capable of withstanding the mechanical forces imposed by short-circuit currents of the magnitude specified on the drawings.
   b. Bus shall be tin-plated for the entire length of the bus.
   c. All joints shall have tin-plated contact surfaces with minimum contact resistance.
2. Ground Bus. An un-insulated copper bar ground bus with a continuous current rating of 50 percent of the horizontal main bus shall be furnished through the entire length of the motor control center. All motor control center equipment requiring grounding shall be connected to this ground bus.

3. The main horizontal bus shall be isolated from the horizontal wiring trough by means of removable barriers. The vertical bus shall be isolated from the removable combination starter units and feeder tap units by means of barriers that are part of the motor control center stationary structure. Barriers shall be sheet steel or other material that will pass the vertical burning test of UL 94 V-0.
4. Provisions shall be made for bus expansion, to prevent undesirable or destructive mechanical strains in the bus supports and connections, through a full-ambient temperature range from -30°C to +50°C. Expansion joints shall be furnished where required.

E. Entrance: Incoming feeder cable entrance will be from the top or bottom.
1. An incoming line termination compartment shall be provided for entry cables. The manufacturer shall extend the main bus into a compartment of the vertical section for termination of the incoming line. Each incoming line termination compartment shall be not less than 18 inches high, and shall be located at the top or bottom of the vertical section to coordinate with the direction of incoming line cable entrance specified.

F. Configuration
1. All motor starter units and feeder circuit breakers shall be readily interchangeable with units of same type and size. In addition, all NEMA sizes 1 and 2, full-voltage, single-speed, non-reversing combination motor starters shall be readily interchangeable with each other. NEMA sizes 3, 4 and 5 full-voltage, single-speed, non-reversing combination starters shall occupy spaces that are multiples of the space occupied by the NEMA sizes 1 and 2 starters.
2. Two (2) 100 ampere frame feeder tap unit breakers or one (1) 225 ampere frame feeder tap unit breaker shall be able to be mounted in the space required for one NEMA sizes 1 or 2, full-voltage, single-speed, non-reversing combination starter. One (1) feeder tap unit breaker shall be able to be mounted in the space required for one NEMA size 3 full-voltage, single-speed, non-reversing combination starter when larger than 225 ampere frame feeder tap unit breakers are specified.
3. All units, except Size 5 starter units and 400-ampere frame or larger feeder tap units, shall be automatically disconnected and connected to the bus as the units are removed or replaced in the motor control center. Size 5 starter units and 400-ampere frame or larger feeder tap units shall have fixed mounting within the motor control center.
4. Reduced voltage solid state starters and variable frequency drives shall be provided in accordance with the requirements of this section and Section 16265 – 600-Volt Variable Frequency Drives, respectively, as indicated on drawings.

G. Integrated Short Circuit Rating. The integrated short circuit rating of the motor control center shall be as indicated on the drawings at 480-volts, 60 Hertz nominal, and no less than 22 KAIC.

H. Terminals. Furnish terminals for all power, control, and ground conductors entering the motor control centers. Terminal connectors shall be furnished for all

incoming line cables and shall be as specified elsewhere. Solder-type terminals are not acceptable.

1. Terminal connectors shall be furnished for all power and control conductors of combination motor starter and feeder tap units as part of the manufactured assembly.
2. Each combination motor starter unit shall be furnished with terminal blocks located adjacent to the vertical wire way for termination of control cable. Terminal blocks shall be manufacturer's standard side-mounted, pressure pull-apart type control terminal blocks rated 480-volt AC. Control cable terminal blocks for combination motor starter units shall be furnished with not less than 18 terminals, with provisions for future terminal blocks.
3. Connectors for attachment of ground busses to the external equipment grounding conductor system shall be suitable for copper conductors, sized to connect to the installed equipment grounding conductor. One connector shall be provided at each end of each motor control center ground bus. A load ground connector shall be furnished on the ground bus for each combination starter unit and each feeder tap unit.

I. Nameplates. An engraved nameplate shall be furnished for the motor control center, each starter unit door, and each feeder tap unit door in accordance with the requirements of Section 16075 –Electrical Equipment Identification. Nameplate inscriptions will be as indicated on the drawings or as furnished by the District during shop drawing review.

2.3 MOTOR STARTER UNITS

A. Motor Starter Units shall be full-voltage, single-speed, non-reversing, combination motor starter units and shall include disconnecting and branch circuit over-current protective devices; dry-type control power transformers; contactors, overload relays, auxiliary control devices, door mounted pilot devices, control relays and accessories as indicated and required for the system provided.

B. Disconnecting and Branch Circuit Over-current Protective Devices for all motor starters shall be magnetic, instantaneous trip-only type, motor circuit protector circuit breakers sized and rated in accordance with the latest NEC and the manufacturer's recommendations based on the service conditions and contractor-supplied motor data.

C. Starter Contactors shall have rated continuous current carrying capacity as listed in NEMA ICS 2, Table 2-210-1 for that size contactor. The interrupting capacity of each starter contactor shall be not less than 10 times the rated continuous current-carrying capacity listed in NEMA ICS 2, Table 2-210-1 for that size contactor.

D. Overload Relays. Thermal overload relays shall be furnished in each phase leg of each motor starter. The overload capacity of the relays shall be manually adjustable through a range of 85 to 115 percent of the normal trip rating. The relays shall not be temperature compensated. Provisions shall be made for manually resetting the thermal relays without opening the starter door.

E. Control power transformer shall be furnished with fuses in both of the primary and one of the secondary phase wires. It shall have a rating of 250 Volt-Amps, minimum.

F. Mechanically Operated Auxiliary Contacts. Each magnetic motor starter shall be furnished with a total of two (2) mechanically operated auxiliary contacts, normally open, convertible in the field, and mounted on the main contactor. The use of auxiliary relays to furnish the specified quantities of auxiliary contacts will not be acceptable. Combination starter units that require line voltage to energize the main contactor operating coils shall be equipped with a total of eight (8) mechanically operated auxiliary contacts.

G. Each starter will be controlled by remote pilot devices. All necessary internal wiring for this feature shall be furnished and connected to terminal blocks.

2.4 REDUCED VOLTAGE SOLID STATE “SOFT” STARTER

A. Reduced voltage solid state starter units shall be a complete motor controller consisting of a power structure, a logic component, an integral LCD display and shall include disconnecting and branch circuit over-current protective devices; dry-type control power transformers; contactors, overload relays, auxiliary control devices, door mounted pilot devices, control relays and accessories as indicated and required for the system provided.

B. The Power Structure shall include an SCR bypass, and built-in overload circuit protection for ratings between 1 Amp and 120 Amps, the power structure shall consist of three power poles with integral heat sinks. Each power pole shall be modular in design that is easily replaceable. Back-to-back SCR pairs or IGBT switches shall be the only power switching semiconductor means acceptable. Diode-SCR combinations are not allowed. SCRs shall have a minimum 1.400 Volt repetitive peak inverse voltage rating.

C. The Logic Component shall be a self-contained control module, compatible with the full range of power structures. The control module shall provide digital micro-processor control and supervision of all operation, including pulse firing of the power structure. The control module shall be easily removable from the power structure without the need to disassemble any associated printed circuit board assemblies. The control module shall consist of the following:
   1. Self-tuning power supply accepting control input power from 100V to 240V AC or 24V AC/DC, 50 or 60Hz
   2. Logic control circuitry incorporating a latch circuit for three wire control
   3. Firing circuitry that incorporates an RC snubber network to prevent false firing.
   4. Input and output circuitry
   5. Digital programming keypad
   6. Backlit LCD display

D. Logic controller input and output terminals shall be easily accessible and located on the front top of the device. Terminals shall be UL rated for 300V, 10A maximum and accept up to two wires ranging in size from 18 AWG to 14 AWG.

E. The controller shall provide the following starting modes as standard. Starting modes shall not be mutually exclusive.
   1. Soft Start with selectable kick-start
      a. Programmable initial torque value of 0 to 90 percent of locked rotor torque.
      b. Programmable acceleration ramp time from 1 to 30 seconds.
      c. A selectable kick start (or boost) shall be provided at the beginning of the voltage ramp. The kick start shall provide a current pulse of 550 percent of the full load current. The kick start time shall be adjustable from 0 to 2 seconds.
   2. Current limited start
      a. Provides a means of limiting the maximum starting current.
      b. Programmable for 150 to 600 percent of full load current.
   3. Soft Stop
      a. Provides a voltage ramp-down for an extended motor stopping time.
      b. A coast-to-rest stop shall still be possible with a separate stop input.
      c. Programmable voltage ramp down time from 0 to 60 seconds.
      d. The load shall stop when the motor voltage drop to a point where the load torque is greater than the motor torque.

F. A backlit alphanumeric LCD shall be included for controller setup, diagnostics, status and monitoring. The display shall be a minimum of four lines, 16 characters per line.

G. The soft starter shall include overload protection that meets applicable standards as a motor protective thermal device. The overload protection shall utilize three-phase current sensing with a selectable trip threshold. The use of two current transformers shall not be acceptable.

H. Each soft starter shall be furnished with a total of two (2) mechanically operated auxiliary Type C contacts. Auxiliary contacts shall be rated for a minimum of 240V AC, minimum. The use of auxiliary relays to furnish the specified quantities of auxiliary contacts will not be acceptable.

I. The soft start controller shall provide the following monitoring functions and indicate these values through the LCD display:
   1. Three-phase current.
   2. Three-phase voltage.
   3. Power factor.
   4. Motor thermal capacity usage.
   5. Elapsed running time.

J. The soft start controller shall include self-protective fault detection circuitry. When a fault condition is detected, the controller shall inhibit starting. Fault diagnostics shall be indicated in descriptive text on the LCD display. The use of fault codes is unacceptable. The following fault conditions shall be detected:
   1. Pre-start power loss with phase indication
   2. Over temperature
   3. Under load

4. Overload
5. Excessive starts per hour
6. Phase reversals
7. Motor jam

2.5 FEEDER TAP UNITS

A. Feeder tap units shall be thermal magnetic trip type molded case circuit breakers as required by Section 16442 – 600-Volt Panelboards and Circuit Breakers.

2.6 CONTROL RELAYS AND pilot devices

A. Solid State and Magnetic Control Relays
1. Description: NEMA ICS 5, solid state relay or Class A300 magnetic control relay.
2. Contacts: Form A or B (or both) as required.
3. Contact Ratings: 10 amperes continuous, minimum.
4. Coil Voltage: 120-volts, 60 Hz.
5. Enclosure: NEMA ICS 6, Type 1.

B. Time Delay Control Relays (On-Time Delay and Off-Time Delay)
1. Description: NEMA ICS 5, solid-state time delay relay – time delay after Energization or after De-Energization indicated on drawings.
2. Contacts: Form A or B (or both) as required.
3. Contact Ratings: 10 amperes continuous, minimum.
4. Coil Voltage: 120-volts, 60 Hz.
5. Enclosure: NEMA ICS 6, Type 1.

C. Plug-in Control Relays
1. Product Description: NEMA ICS 5, miniature, hermetically sealed relay.
2. Contacts: 4 pole double throw (4PDT) Form A or B.
3. Contact Ratings: 5 amperes continuous, minimum.
4. Coil Voltage: 120-volts, 60 Hz.
5. Enclosure: Hermetically sealed, suitable for Class 1, Division 1 and 2 installations.
6. Socket: To match relay and meet conditions of installation.

D. Switches and Push Buttons:
1. Product Description: NEMA ICS 5, heavy-duty oil-tight.
2. Contact Ratings: 10 amperes continuous, minimum.
3. Selector Switches: Rotary type.
4. Toggle Switches: Honeywell Micro Switch Type TL or approved equal.
5. Each switch shall have a legend plate – “Hand-Off-Auto”, “Local-Remote”, Start-Stop”, etc. as required to describe the control mode or function.

E. Pilot Lights:
1. Cluster type light emitting diode (LED) suitable for operation at 120-volt AC control voltage or as required. The LED color shall be coordinated with the alarm or indicated function.
2. Pilot lights shall be push-to-test type.

Lens Color	Status and Alarm Condition Indication
Red	Alarm indication – abnormal condition.
Green	Equipment energized – motor running, valve open, circuit breaker closed.
Amber	Abnormal “trouble” condition exists.
White	Power on indication.

F. Terminal Blocks
1. Description: NEMA ICS 4 terminal blocks.
2. A Power Terminal is defined as any terminal that is required to carry a current greater than 1 amp or a voltage in excess of 50-volts. Power terminals shall be of the unit construction type with closed back and tubular pressure screw connectors, rated 600 volts minimum, and with a continuous current carrying capacity of 15-amp minimum.
3. A Signal and/or Control Terminal is defined as any terminal that is required to carry a current that may not exceed 1,000 mA instantaneous and a voltage that is not to exceed 50-volt instantaneous. Signal and/or control terminals may be of the modular construction type, suitable for channel mounting, with tubular pressure screw connectors, rated 300-volts minimum.
4. Terminal connections shall be made using solid copper conductor. If stranded conductor is to be used, it must be terminated with a “spade” type lug. Stranded wire may not be directly landed on terminal blocks.

2.7 SOURCE QUALITY CONTROL

A. The motor control centers shall be factory-tested in accordance with NEMA standards and ANSI C37.17, together with any additional tests which may be required to ensure that the wiring is correct and that all equipment is in a satisfactory operating condition.

PART 3 EXECUTION

3.1 INSTALLATION

A. Motor control center shall be assembled and installed in the location indicated on the drawings in conformance to applicable requirements of the NFPA 70, NECA Standard of Installation and manufacturer's instructions for assembly, leveling and alignment.

B. Tightening of Connections. All electrical connections secured with bolts or studs shall be tightened using a torque wrench or other tightening procedures recommended by the manufacturer for tightening bus joints, connector attachments, and contact attachments.

C. All power and control circuits shall be connected to the motor control center as indicated on the drawings. The motor control center shall be grounded in conformance with the requirements of Section 16060 – Basic Electrical Materials and Methods.

3.2 FIELD QUALITY CONTROL

A. Check phase-to-phase and phase-to-ground insulation for proper resistance levels. Check motor control center electrical circuits for continuity and for short circuits.

B. Subsequent to wire and cable hookups, energize motor control centers and demonstrate functioning in accordance with requirements.

C. All control devices including interlocks, indicating lights, control relays, timers, time delay relays, and push buttons shall be checked for correct operation.

END OF SECTION

SECTION 16461

DRY TYPE TRANSFORMER

PART 1 GENERAL

1.1 SUMMARY

A. Furnish and install single-phase and three-phase general purpose, individually mounted, dry-type transformers of the two-winding type, self-cooled, with ratings and voltages as indicated on the drawings.

1.2 RELATED SECTIONS

A. Section 16060 – Basic Electrical Materials and Methods

B. Section 16075 – Electrical Equipment Identification.

1.3 REFERENCE SPECIFICATIONS, CODES AND STANDARDS

A. ANSI C57.96 – Guide for Loading Dry-Type Distribution and Power Transformers.

B. UL 506 – Specialty Transformers

C. ASTM D635 – Standard Test Method for Rate of Burning and/or Extent and Time of Burning of Plastics in a Horizontal Position

D. NEMA ICS 6 – Enclosures

E. NEMA ST 1 - Specialty transformers

F. NEMA ST 20 - Dry type transformers for general applications

G. NEMA TP 1 - Guide for Determining Energy Efficiency for Distribution Transformers

H. NETA ATS - Acceptance Testing Specifications for Electrical Power Distribution Equipment and Systems

I. NFPA 70 - National Electrical Code

1.4 DESIGN REQUIREMENTS

A. Transformers shall be designed, manufactured, and tested in accordance with the latest applicable ANSI, NEMA and IEEE standards. All 600-volt class transformers 2 kVA through 750 kVA shall be UL listed and bear the UL label.

B. Transformers shall be designed for continuous operation at rated kVA for 24 hours a day, 365 days a year operation with normal life expectancy as defined in ANSI C57.96.

C. Transformers shall be of the energy efficient type, meeting the requirements of NEMA TP 1.

1.5 CONTRACTOR SUBMITTALS

A. In accordance with Division 1 requirements

B. Product Data.
1. Submit outline and support point dimensions of enclosure and accessories, unit weight, voltage, kVA, impedance rating, characteristics, insulation system type, rated temperature rise, winding configurations, terminations at primary and secondary connection points.
2. Indicate application conditions and limitations of use stipulated by product testing agency specified under regulatory requirements. Include instructions for storage, handling, protection, examination, preparation, installation, and starting of product.
3. Report on all factory tests and results. Factory test data on a prototypical unit of identical size and features is not acceptable.

C. Shop Drawings: Submit calculations and anchoring methods (anchor bolt size, embedment and assembly details) to meet California Seismic Zone IV requirements.

D. Certification and Test Reports.
1. Indicate loss data, efficiency at 25, 50, 75 and 100 percent rated load, and sound level.
2. Manufacturer's Certificate. Certify that products meet or exceed specified requirements.

1.6 DELIVERY, STORAGE AND HANDLING

A. Store, protect and handle products in accordance with NEMA standards.

B. Deliver transformers individually wrapped for protection and mounted on shipping skids.

C. Accept transformers on site and inspect for damage.

D. Store in a clean, dry space. Maintain factory wrapping or provide an additional heavy canvas or heavy plastic cover to protect units from dirt, water, construction debris, and traffic.

E. Handle in accordance with manufacturer's written instructions. Lift only with lugs provided for the purpose. Handle carefully to avoid damage to transformer internal components, enclosure and finish.

PART 2 PRODUCT

2.1 MANUFACTURERS

A. The transformers shall be as manufactured by one of the following manufacturers:
   1. General Electric Company
   2. Siemens
   3. Square D Company
   4. Cutler-Hammer/Eaton Corp.
   5. Approved equal

2.2 STANDARD DRY-TYPE TRANSFORMERS

A. NEMA ST 20 Class AA dry-type transformer. Transformer shall be suitable for connection to 75 degrees C wire loaded to the 75 degrees C ampacity. All three-phase transformers shall have three-winding primaries and three-winding secondary.

B. Insulation Systems
   1. Transformers shall be insulated as follows:
      a. 2-kVA and below - 150 degrees C insulation system
      b. 3 through 30 kVA - 180 degrees C insulation system
      c. 45-kVA and above - 220 degrees C insulation system.
   2. Required performance shall be obtained without exceeding the above indicated temperature rise in a 40 degrees C maximum ambient, with a 30 degrees C average over 24 hours.
   3. All insulation material shall be flame-retardant and shall not support combustion as defined in ASTM D635.
   4. Transformers 30 kVA through 225 kVA shall be 115 degrees C temperature rise above 40 degrees C ambient. 115 degrees C rise transformers shall be capable of carrying a 15 percent continuous overload without exceeding a 150 degrees C rise in a 40 degrees C ambient.
   5. Transformers rated 300 kVA through 500 kVA shall be 80 degrees C temperature rise above 40 degrees C ambient. 80 degrees C rise transformers shall be capable of carrying a 30 percent continuous overload without exceeding a 150 degrees C rise in a 40 degrees C ambient.
   6. Limit transformer surface temperature rise to maximum of 50 degrees C.

C. Core and Coil Assemblies
   1. The transformer core shall be constructed with high grade, non-aging, grain-oriented silicon steel with high magnetic permeability, and low hysteresis and eddy current losses. Maximum magnetic flux densities shall be substantially below the saturation point.
   2. The transformer core volume shall allow sufficient transformer operation at 10 percent above the highest tap voltage.
   3. The core laminations shall be tightly clamped and compressed.
   4. Coils shall be wound of electrical grade copper or aluminum with continuous wound construction, terminations brazed or welded.

5. On units rated below 3 kVA, the core and coil assembly shall be completely encapsulated in a proportioned mixture of resin and aggregate to provide a moisture proof, shock resistant seal. The core and coil encapsulation system shall minimize the sound level.
6. On units rated 3 kVA and above, the core and coil assembly shall be impregnated with non-hygroscopic, thermosetting varnish and cured to reduce hot spots and seal out moisture. The assembly shall be installed on vibration-absorbing pads.

D. Taps
1. For transformers 25 kVA and larger, provide primary windings with 6 taps; two 2-1/2 percent increments above full-rated voltage and four 2-1/2 percent increments below full-rated voltage.
2. For transformers below 25 kVA, provide two taps at 5 percent increments below full-rated voltage.
3. For transformers below 1 kVA, no taps are required.

E. Provide terminal enclosure with screw cover to accommodate primary and secondary coil wiring connections and electrical supply raceway terminal connector.
1. Provide terminal board with mechanical compression type connectors. Limit terminal compartment temperature to 75 degrees C when transformer is operating continuously at rated load with ambient temperature of 40 degrees C.
2. Provide wiring connections suitable for stranded copper wiring, rated 75 degrees C, and loaded to the 75 degrees C ampacity.

F. Basic Impulse Level
1. 10-kV for transformers less than 300-kVA
2. 30-kV for transformers 300-kVA and larger.

G. Grounding
1. Ground core and coil assembly to enclosure by means of a visible flexible copper-grounding strap. Provide grounding in accordance with Section 16060 – Basic Electrical Materials and Methods.

2.3 ENCLOSURE

A. The enclosure shall be made of heavy gauge steel and shall be degreased, cleaned, primed, and finished with ANSI 61 color weather-resistant enamel. All transformers shall be equipped with a wiring compartment suitable for conduit entry and large enough to allow convenient wiring. The maximum temperature of the enclosure shall not exceed 90 degrees C. The core of the transformer shall be grounded to the enclosure.

B. On units rated below 3 kVA, the enclosure construction shall be totally enclosed, non-ventilated, NEMA ICS 6, Type 3R with lifting eyes as required.

C. On units rated 3 kVA and above, the enclosure construction shall be fully ventilated NEMA ICS 6, Type 1 or as indicated on drawings, with lifting lugs as required. All ventilation openings shall be protected against falling dirt and water.

2.4 NAMEPLATE

A. Provide manufacturer nameplate that includes transformer connection data and overload capacity based on rated allowable temperature rise.

B. Provide transformer nameplate in accordance with Section 16075 –Electrical Equipment Identification.

2.5 SOUND LEVELS

A. Transformer sound levels shall not exceed the following:

1.	Up to 9-kVA	40 db
2.	10 to 50 kVA	45 db
3.	51 to 150 kVA	50 db
4.	151 to 300 kVA	55 db
5.	301 to 500 kVA	60 db
6.	501 to 700 kVA	62 db
7.	701 to 1000 kVA	64 db

2.6 SOURCE QUALITY CONTROL

A. The following factory test results shall be provided for each transformer:
1. Ratio tests at the rated voltage connection and at all tap connections
2. Polarity and phase relation tests on the rated voltage
3. Applied potential tests
4. Induced potential test
5. No-load and excitation current at rated voltage on the rated voltage connection.

PART 3 INSTALLATION

3.1 INSTALLATION

A. Install products in accordance with manufacturer's instructions

B. Set transformer plumb and level

C. Use liquid-tite flexible conduit, 2 feet minimum length, for connections to transformer case. Make conduit connections to side panel of enclosure.

D. Where mounted on a structural flooring, mount transformers on vibration isolating pads (minimum 0.75-inch thick) suitable for isolating the transformer noise from the building structure.

E. Provide seismic restraints and securely anchor to structural system.

F. Provide grounding and bonding in accordance with Section 16060 – Basic Electrical Materials and Methods.

3.2 FIELD QUALITY CONTROL

A. Inspect and test in accordance with NETA ATS as outlined below:

1. Dry Type Air-Cooled Transformers, 600 Volt and Below – All Single-Phase and Three-Phase.
   a. Visual and Mechanical Inspections
      1) Compare equipment nameplate data with drawings and specifications.
      2) Inspect physical, electrical and mechanical condition.
      3) Verify that resilient mounts are free and that any shipping brackets have been removed.
      4) Verify tightness of accessible bolted electrical connections by calibrated torque-wrench method in accordance with manufacturer's published data or NETA ATS Table 10.12.
   b. Electrical Tests
      1) Perform resistance measurements through all bolted connections with a low-resistance ohmmeter.
      2) Perform insulation-resistance tests winding-to-winding and each winding-to-ground with test voltage in accordance with NETA ATS Table 10.5.
      3) Calculate polarization index.
      4) Perform turns ratio tests at all tap positions.
      5) Verify that as-left tap connections are as specified.
   c. Test Values
      1) Compare bolted connection resistances to values of similar connections.
      2) Bolt-torque levels should be in accordance with NETA ATS Table 10.12 unless otherwise specified by manufacturer.
      3) Microhm or millivolt drop values shall not exceed the high levels of the normal range as indicated in the manufacturer's published data. If manufacturer's data is not available, investigate any values that deviate from similar connections by more than 50 percent of the lowest value.
      4) Insulation-resistance test values at one minute should not be less than the values calculated in accordance with the formula in NETA ATS Table 10.5. Results shall be temperature corrected in accordance with NETA ATS Table 10.14.
      5) The polarization index shall be greater than 1.0 and shall be recorded for future reference.
      6) Turns-ratio test results should not deviate more than one-half percent from either the adjacent coils or the calculated ratio.
2. Dry Type Air-Cooled Transformer, Above 600 Volt and 600 Volt and below – Greater than 167 kVA Single-Phase and 500 kVA Three-Phase. The following tests shall be in addition to those listed in above.
   a. Visual and Mechanical Inspection
      1) Verify that control and alarm settings on temperature indicators are as specified.

2) Verify that cooling fans operate and that fan motors have correct overcurrent protection.
3) Perform specific inspections and mechanical tests as recommended by manufacturer.
4) Verify that the core, frame, and enclosure groundings are correct.
5) Verify the presence of transformer surge arresters.

b. Electrical Tests
1) Perform power-factor or dissipation-factor tests in accordance with the test equipment manufacturer's published data.
2) Perform an excitation-current test on each phase.
3) Measure the resistance of each winding at each tap connection.
4) Measure core insulation resistance at 500 volts dc if core is insulated and if the core ground strap is removable.
5) Perform an overpotential test on all high- and low-voltage windings-to-ground.
6) Verify correct secondary voltage phase-to-phase and phase-to-neutral after energization and prior to loading.

c. Test Values
1) CH and CL dissipation-factor/power-factor values will vary due to support insulators and bus work utilized on dry transformers. The following is expected on CHL power factors:
a) Power Transformers: one percent or less
b) Distribution Transformers: three percent or less
2) Consult transformer manufacturer or test equipment manufacturer's data for additional information.
3) Winding resistance test results, after factoring in temperature corrections, should compare within one percent of factory obtained results except in instances of extremely low resistance values.
4) Typical excitation current test data pattern for a three-legged core transformer is two similar current readings and one lower current reading.
5) Core insulation resistance values should be comparable to factory obtained results but not less than one megohm at 500 volts dc.
6) AC overpotential test shall not exceed 75 percent of factory test voltage for one-minute duration. DC overpotential test shall not exceed 100 percent of the factory RMS test voltage for one-minute duration. The insulation shall withstand the overpotential test voltage applied.

B. Energize primary circuit at rated voltage and frequency from normal power source and test transformer, including, but not limited to, audible sound levels, to demonstrate capability and compliance with requirements. Where possible, correct malfunctioning units at the site, then retest to demonstrate compliance otherwise, remove and replace with new units and proceed with re-testing.

3.3 ADJUSTING

A. Measure primary and secondary voltages and make appropriate tap adjustments. Record final voltages and submit test report.

END OF SECTION

SECTION 16500

INTERIOR AND EXTERIOR LIGHTING

PART 1 GENERAL

1.1 SUMMARY

A. This Section includes interior and exterior luminaires, lamps, ballasts, and accessories.

1.2 REFERENCES

A. ANSI C78.379 Electric Lamps Classification of the Beam Patterns of Reflector Lamps.

B. ANSI/NFPA 101 - Life Safety Code.

C. IEC/EN 60669-2-1 Switches for household and similar fixed electrical installations - electronic switches.

D. IWSNA LM-79 – Electrical and Photometric Measurements of Solid State Lighting Products.

E. IESNA LM-80 – Measuring Lumen Maintenance of LED Light Sources.

F. National Electrical Manufacturer’s Association (NEMA) SSL-1 – Electronic Drivers for LED Devices, Arrays, or Systems.

G. Underwriters Laboratories, Inc. (UL) 8750 – Light Emitting Diode (LED) Light Sources for Use in Lighting Products

H. NFPA 70 – National Electrical Code.

I. UL 924 – Emergency Lighting and Power Equipment.

J. UL 935 – Lamp Ballasts.

1.3 SUBMITTALS

A. In accordance with Division 1 requirements.

B. Product Data: Submit dimensions, ratings, photometry and performance data.
   1. Light fixtures.
   2. Lamps.
   3. Ballasts.

1.4 QUALIFICATIONS

A. Manufacturer: Company specializing in manufacturing products specified in this section with minimum three (3) years’ experience.

1.5 WARRANTEE

A. Fixtures and ballasts shall have a minimum five year warrantee.

PART 2 PRODUCTS

2.1 LIGHT FIXTURES – GENERAL

A. Provide lighting fixtures, lamps, ballasts and accessories complete and ready for operation. Furnish the fixtures as indicated on the Drawings and as listed in the fixture schedule. Verify in all cases, the quantity and quantity of fixtures necessary to achieve the indicated results.

B. All lighting fixtures shall have published photometric tests conducted by Electrical Testing Laboratories. Make available the test results upon request. Testing shall include candlepower distribution curves, total fixture efficiency, brightness and shielding angles in longitudinal and transverse directions.

C. Provide lighting fixtures in the finishes and colors as noted on the Drawings.

D. Provide the UL and IBEW labels on all lighting fixtures.

E. Observe the requirements of the CBC Section 2606 regarding plastic lighting diffusers. Fixtures and auxiliary equipment mounted against combustible material shall be approved for such installation.
   1. Make-up fixtures with Type AF or equal fixture wire. Provide an identified, approved landing lug for equipment ground wires.

2.2 LED LIGHT FIXTURES

A. General
   1. LED light fixtures shall be in accordance with IES, NFPA, UL, as shown on the drawings, and as specified.
   2. LED light fixtures shall be a factory assembled luminaire including all required driver and light engine modules integral to and within a single housing. Lead lengths between driver and light engine shall not exceed 3 feet. Remote luminaire/driver installations are not acceptable.
   3. LED light fixtures shall be Reduction of Hazardous Substances (RoHS) compliant.

B. LED Driver Modules
   1. Description: Universal voltage switching-mode LED driver module with a rated lifetime of not less than 50,000 hours when operated at an ambient temperature of less than 60-degrees C.
   2. LED drivers shall include native 0-10V dimming capabilities without additional control devices or field-installed circuitry, integral short-circuit, open-circuit and overload fault protection to prevent driver failure.
   3. LED drivers shall be capable of producing adequate output current to produce the specified light levels. Compatibility of driver and LED light engine must be tested and ensured by driver manufacturer.

4. Minimum efficiency: 85% at full load.
5. Minimum Operating Ambient Temperature: -20° C (-4° F).
6. Input Voltage: 120V to 277V (±10%) AC at 60Hz. Drivers that require DC input shall include an integral converter that accepts standard line voltage AC.
7. Power Factor: ≥ 0.95.
8. Total Harmonic Distortion: ≤ 20% and meet ANSI C82.11 maximum allowable THD requirements
9. Designed and tested to withstand electrostatic discharges up to 15,000 V without impairment per IEC 801-2.
10. Electrolytic capacitors to operate at least 20 degrees C below the capacitor's maximum temperature rating when the driver is under fully-loaded conditions and case temperature is 62 degrees C.
11. Maximum inrush current of 2 amperes for 120-Volt and 277-Volt drivers.
12. Withstand up to a 4,000 volt surge without impairment of performance as defined by ANSI C62.41 Category A.
13. Inaudible in a 27 dBA ambient.

C. LED Light Engine Modules
1. Minimum CRI: 80.
2. Color Temperature: 3500K, unless otherwise noted.
3. Minimum Rated Life: 50,000 hours as per LM79.

2.3 EXIT LIGHT

A. Provide exit lights and signs to meet the requirements of UL 924 with 90-minute internal battery backup.

2.4 LIGHTING CONTROL

A. Lighting control panels with time clock and relays.
1. Manufacturer: Wattstopper or approved alternate.
2. Provide panel to meet requirements of UL 916 or UL 508.

B. Photocells
1. Provide photocell suitable for use with lighting control panel and other installed system components.
2. Provide photocell to meet the requirements of UL 773.

C. Occupancy Sensors
1. Wall or ceiling mounted infrared or ultrasonic (or combination) occupancy sensor with UL 916 or UL 508 listing.

D. Dimmer Switches
1. Wall mounted electronic type dimmer switches to match the LED type fixtures.

PART 3 EXECUTION

3.1 GENERAL

A. Install fixtures in straight, true lines and without visible gaps between fixtures and building surfaces and between fixtures in continuous rows. For linear wall mounted fixtures, ensure that the wall surface is finished flat, straight, and free of imperfections prior to mounting the fixtures. Replace or repair lighting fixture installations that are out of plumb or that have obvious gaps or misalignment.

B. Provide fixtures with the appropriate trim frames, flanges, canopies, and finish accessories to accommodate the ceiling conditions. Prior to ordering fixtures, and throughout the Project, verify the exact ceiling types, finishes, and thicknesses and coordinate the fixture installation therewith.

C. Refer to the Drawings, particularly the architectural elevations and reflected ceiling plans, in determining the exact mounting location and height of lighting fixtures. For wall mounted or suspended fixtures that do not have the mounting heights clearly indicated, contact the Owner for clarification prior to ordering pendants and installing the fixtures.

D. Following installation of HID and fluorescent lighting fixtures, and prior to completion of the Project, perform a burn in test of the lights. The burn in test shall consist of operating the fixtures continuously for a minimum of forty-eight (48) hours. Replace lamps that are inoperative or that show signs of flicker or color wander. If building power is not available for the burn in test, then provide a portable generator, fuel, and temporary connections for the stipulated period.

E. Provide final touchup painting to repair fixture finishes which are nicked or marred during installation. Obtain the paint from the fixture manufacturer.

3.2 AUDIBILITY

A. Fixtures shall be free from any undesirable hum, vibration, or noise. Provide lighting equipment suitable for the intended ambient sound levels. Where necessary to meet these criteria, provide additional means of sound deadening, whether or not specifically indicated. Fixtures that are found to be unsatisfactory in the opinion of the Owner shall be removed and replaced at the Contractor’s expense.

3.3 SUPPORTS AND BLOCKING

A. Provide hangers, suspension cables, and blocking for lighting fixtures that will provide support independent of suspended ceilings, ceiling or wall surfaces, and electrical outlet boxes. Exception: Fixtures less than 12 inches in all dimensions and weighing less than six pounds may be permitted to be supported from the electrical outlet box if the box itself is independently supported by blocking or hangars.

B. Refer to the Drawings for specific blocking details and seismic mounting details for lighting fixtures.

3.4 OBSTRUCTIONS

A. Verify throughout the Project that mounting locations and suspension systems remain free of obstructions. Suspended or pendant mounted fixtures must be free to swing 45 degrees in all directions without hitting obstructions or other fixtures. Provide seismic rated swivel ball hangars for pendant mounted lighting fixtures to achieve the proper swing.

3.5 GROUNDING AND BONDING

A. Ground and bond interior luminaries under the provisions of Section 16060.

3.6 FIELD QUALITY CONTROL

A. Install complete lighting system and connect control devices to meet the requirements of local, state and federal energy codes.

B. Operate each luminaire after installation and connection.

C. Inspect for proper connection and operation.

3.7 ADJUSTING AND CLEANING

A. Aim and adjust luminaries as directed.

B. Remove dirt and debris from enclosures.

C. Clean photometric control surfaces as recommended by manufacturer

D. Clean finishes and touch up damage

3.8 PROTECTION OF FINISHED WORK

A. Relamp luminaries that have failed lamps at substantial completion.

END OF SECTION

CITY OF SANTA CLARA
WATER AND SEWER UTILITIES

NORTHSIDE TANKS SITE IMPROVEMENTS PROJECT

PREPARED BY

GHD

VICINITY MAP

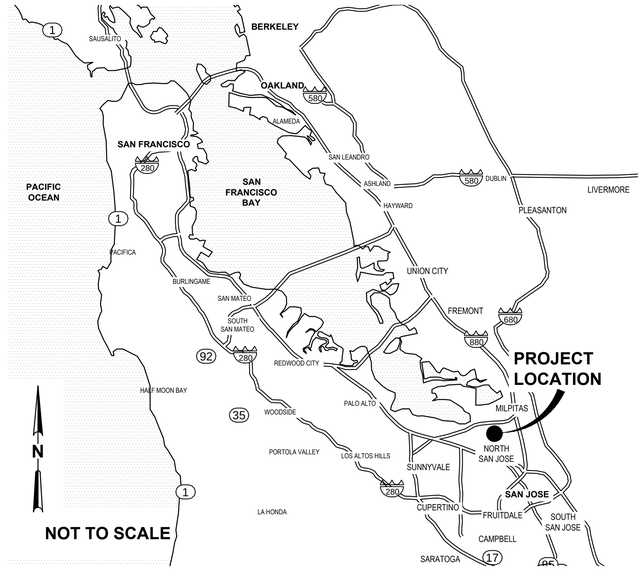

LOCATION MAP

DRAWING INDEX

SHT #	DWG #	DESCRIPTION
1	G001	VICINITY MAP, LOCATION MAP, AND DRAWING INDEX
2	G002	NOTES
3	C001	CIVIL SYMBOLS, LEGEND, AND ABBREVIATIONS
4	C100	SITE DEMOLITION PLAN
5	C101	OVERALL SITE PLAN
6	C102	WATER PLAN AND PROFILE 1
7	C103	WATER PLAN AND PROFILE 2
8	C501	STANDARD WATER DETAILS 1
9	C502	STANDARD WATER DETAILS 2
10	C503	WATER DETAILS 1
11	C504	WATER DETAILS 2
12	C505	FLOWMETER AND TURBIDIMETER VAULTS
13	C506	WATER DETAILS 3
14	C507	WATER DETAILS 4
15	A001	ARCHITECTURAL ABBREVIATIONS, LEGEND, AND NOTES
16	A101	FLOOR PLAN PROPOSED ADDITION
17	A102	ROOF PLAN
18	A201	EXTERIOR ELEVATIONS
19	A501	DETAILS
20	A601	SCHEDULES AND DETAILS
21	S001	STRUCTURAL LEGEND AND NOTES
22	S002	SPECIAL INSPECTIONS
23	S003	STRUCTURAL NOTES
24	S100	BUILDING FOUNDATION PLAN
25	S300	STRUCTURAL SECTIONS
26	S501	STRUCTURAL DETAILS 1
27	M001	MECHANICAL LEGEND, SYMBOLS, & ABBREVIATIONS
28	M100	MECHANICAL HVAC PLAN
29	M101	MECHANICAL FUEL PIPING/ PLUMBING PLAN
30	M501	MECHANICAL DETAILS AND SCHEDULES
31	E001	ELECTRICAL LEGEND AND ABBREVIATIONS
32	E002	SVP CONDUIT RELOCATION
33	E101	ELECTRICAL SITE PLAN
34	E102	ELECTRICAL DEMOLITION PLAN - EXISTING BLDG
35	E103	ELECTRICAL PLAN - EXISTING BLDG
36	E104	LIGHTING LAYOUT PLAN
37	E105	ELECTRICAL LAYOUT PLAN

DRAWING INDEX

SHT #	DWG #	DESCRIPTION
38	E106	LIGHTING LAYOUT PLAN
39	E501	ELECTRICAL DETAILS 1
40	E502	ELECTRICAL DETAILS 2
41	E503	ELECTRICAL DETAILS 3
42	E504	ELECTRICAL DETAILS 4
43	E505	I/O TERMINAL CABINET DETAIL
44	E601	ELECTRICAL SINGLE LINE DIAGRAMS
45	E602	ELECTRICAL SCHEDULES
46	E603	ELECTRICAL INPUT/OUTPUT SCHEDULE
47	E701	ELECTRICAL ENERGY COMPLIANCE 1
48	E702	ELECTRICAL ENERGY COMPLIANCE 2
49	E703	ELECTRICAL ENERGY COMPLIANCE 3

SIGNATURE BLOCK

APPROVED: SHILPA MEHTA
PRINCIPAL ENGINEER - WATER AND SEWER
CITY OF SANTA CLARA

WATER AND SEWER UTILITIES — DATE

REVIEWED:

PUBLIC WORKS DEPARTMENT — DATE

PLANNING AND INSPECTION DEPARTMENT — DATE

FIRE DEPARTMENT — DATE

SILICON VALLEY POWER — DATE

REGISTERED PROFESSIONAL ENGINEER — MATTHEW PAO — No. C63664 Exp. 9/30/14 — CIVIL — STATE OF CALIFORNIA
6/27/14

GHD Inc.
1735 North First Street Suite 301 San Jose California 95112 USA
T 1 408 451 9615 **F** 1 408 451 9665
W www.ghd.com

DATE	REVISION	BY

CITY OF SANTA CLARA
WATER & SEWER UTILITIES

NORTHSIDE TANKS SITE IMPROVEMENTS PROJECT
VICINITY MAP, LOCATION MAP, AND DRAWING INDEX

APPROVED DATE
DIRECTOR OF WATER & SEWER UTILITIES

PROJ. NO.	592-1423-80300-7054-(I)30148		
DESIGNED BY	NK	DRAWN BY	CF
CHECKED BY	AC	YEAR	2014
DATE	JULY 2014	BLK. BK. PG.	94
DRAWING NO.	G001	SHT. 1 OF	49
HORIZ.	NOTED	VERT. –	
		DWG. NO.	W-3143-4

Plot Date: 24 June 2014 - 12:22 AM Plotted by: Ming Yee Cad File No: N:\US\San Francisco\Projects\11205 City of Santa Clara\8410306 Northside Tanks Piping Reconfig\06-CAD\Sheets\8410306 G001.dwg

CITY OF SANTA CLARA GENERAL NOTES

1. ALL MATERIALS AND WORKMANSHIP SHALL CONFORM TO THE CITY'S STANDARD DETAILS, TECHNICAL SPECIFICATIONS, AND GENERAL REQUIREMENTS.
2. IT IS THE CONTRACTOR'S RESPONSIBILITY TO VERIFY THE LOCATION OF ALL EXISTING UTILITIES WITH THE APPROPRIATE UTILITY AGENCIES PRIOR TO THE COMMENCEMENT OF CONSTRUCTION. CONTACTOR SHALL NOTIFY ALL PUBLIC AND PRIVATE UTILITY OWNERS 48 HOURS PRIOR TO COMMENCEMENT OF WORK ADJACENT TO THE UTILITY. CONTACT UNDERGROUND SERVICE ALERT (USA) AT 800-227-2600.
3. BLACK SAND SLURRY SEAL SHALL BE REQUIRED ON ALL NEW STREET PAVEMENT FOR TRENCH WORK, POTHOLES, AND STREET WIDENING. SLURRY SEAL SHALL EXTEND TWELVE INCHES BEYOND THE LIMIT OF PAVEMENT RECONSTRUCTION.
4. THE CONTRACTOR SHALL NOTIFY, BY CIRCULAR, ALL BUSINESS ESTABLISHMENTS AND RESIDENCES LOCATED IN AREAS AFFECTED BY THE WORK AT LEAST FORTY-EIGHT (48) HOURS PRIOR TO START OF CONSTRUCTION. CIRCULAR SHALL BE SUBJECT TO THE APPROVAL OF THE CITY ENGINEER.
5. ALL MANHOLES, VALVE BOXES, MONUMENT BOXES, AND OTHER STRUCTURES IN THE PAVEMENT AREA SHALL BE ADJUSTED TO FINISH GRADE BEFORE PAVING FINAL LIFT.
6. IT IS THE CONTRACTOR'S RESPONSIBILITY TO REPLACE ALL STREET MONUMENTS OR LOT CORNER PIPES DISTURBED DURING THE PROCESS OF CONSTRUCTION. IF A STREET MONUMENT HAS THE POTENTIAL OF BEING DISTURBED, A CORNER RECORD SHALL BE FILED WITH THE SANTA CLARA COUNTY SURVEYOR (PER SECTION 8773.2 OF THE PUBLIC LAND SURVEYORS ACT) AS REQUIRED BY THE SUBDIVISION MAP ACT TO PRESERVE THE LOCATION OF SAID STREET MONUMENT. CONTRACTOR SHALL, AT HIS/HER EXPENSE, HIRE A CIVIL ENGINEER OR LAND SURVEYOR TO PERFORM THE WORK.
7. ALL SURPLUS AND UNSUITABLE MATERIAL SHALL BE REMOVED FROM PROJECT SITE AND DISPOSED OF AT THE CONTRACTOR'S EXPENSE.
8. CONTRACTOR SHALL PROVIDE ADEQUATE DUST CONTROL AND KEEP MUD AND DEBRIS OFF THE PUBLIC RIGHT-OF-WAY AT ALL TIMES.
9. ALL TRENCHES AND EXCAVATIONS SHALL BE CONSTRUCTED IN STRICT COMPLIANCE WITH THE APPLICABLE SECTIONS OF CALIFORNIA AND FEDERAL O.S.H.A. REQUIREMENTS AND OTHER APPLICABLE SAFETY ORDINANCES. CONTRACTOR SHALL BEAR FULL RESPONSIBILITY FOR TRENCH SHORING DESIGN AND INSTALLATION.
10. EXISTING UTILITIES SHOWN ARE BASED UPON RECORD INFORMATION AND ARE APPROXIMATE IN LOCATION AND DEPTH. THE CONTRACTOR SHALL POTHOLE ALL EXISTING UTILITIES THAT MAY BE AFFECTED BY NEW FACILITIES IN THIS CONTRACT, VERIFY ACTUAL LOCATION, DEPTH, AND SERVICE, AND REPORT POTENTIAL CONFLICTS TO THE ENGINEER PRIOR TO EXCAVATING FOR NEW FACILITIES.
11. CONTRACTOR SHALL PERFORM HIS CONSTRUCTION AND OPERATION IN A MANNER WHICH WILL NOT ALLOW HARMFUL POLLUTANTS TO ENTER THE STORM DRAIN SYSTEM. TO ENSURE COMPLIANCE, THE CONTRACTOR SHALL IMPLEMENT THE APPROPRIATE BEST MANAGEMENT PRACTICE (BMP) AS OUTLINED IN THE BROCHURES ENTITLED "BEST MANAGEMENT PRACTICE FOR THE CONSTRUCTION INDUSTRY" ISSUED BY THE SANTA CLARA VALLEY NONPOINT SOURCE POLLUTION CONTROL PROGRAM, TO SUIT THE CONSTRUCTION SITE AND JOB CONDITION.
12. OVERNIGHT PARKING OF CONSTRUCTION EQUIPMENT IN THE PUBLIC RIGHT-OF-WAY SHALL NOT BE PERMITTED, EXCEPT AT LOCATION(S) APPROVED BY THE CITY TRAFFIC ENGINEER.
13. ANY UTILITIES BEING ABANDONED SHALL BE EXCAVATED, REMOVED, PROPERLY DISPOSED OF OFFSITE, AND TRENCH BACKFILLED AND COMPACTED TO 95% MIN. COMPACTION UNLESS SPECIFICALLY NOTED IN THE PLANS TO BE ABANDONED IN PLACE. UTILITIES TO BE ABANDONED IN PLACE SHALL BE FILLED WITH SAND OR CONTROL DENSITY FILL (CDF) AND PLUGGED AT EACH END WITH A 6" THICK WALL OF CLASS "A" P.C.C.

SURVEY NOTES

1. THE BOUNDARY EASEMENTS, AND OTHER ENCUMBRANCES SHOWN ARE BASED SOLELY UPON INFORMATION CONTAINED IN THE FOLLOWING DOCUMENT:
   TRACT NO. 10118 FILED FOR RECORD ON MARCH 23, 2012 IN BOOK 851 OF MAPS AT PAGES 29-34, SANTA CLARA COUNTY RECORDS.

   THIS IS NOT A BOUNDARY SURVEY. NO LIABILITY IS ASSUMED BY KIER & WRIGHT FOR THE EXISTENCE OF ANY EASEMENT, ENCUMBRANCES, DISCREPANCIES IN BOUNDARY OR TITLE DEFECTS NOT MENTIONED IN SAID DOCUMENTS AND THEREFORE NOT SHOWN.
2. THE TYPES, LOCATIONS, SIZES AND/OR DEPTHS OF EXISTING UNDERGROUND UTILITIES AS SHOWN WERE OBTAINED FROM SOURCES OF VARYING RELIABILITY. THE CONTRACTOR IS CAUTIONED THAT ONLY ACTUAL EXCAVATION WILL REVEAL THE TYPES, EXTENT, SIZES, LOCATIONS AND DEPTHS OF SUCH UNDERGROUND UTILITIES. [A REASONABLE EFFORT HAS BEEN MADE TO LOCATE AND DELINEATE ALL UNKNOWN UNDERGROUND UTILITIES. HOWEVER, THE ENGINEER CAN ASSUME NO RESPONSIBILITY FOR THE COMPLETENESS OR ACCURACY OF ITS DELINEATON OF SUCH UNDERGROUND UTILITIES WHICH MAY BE ENCOUNTERED, BUT WHICH ARE NOT SHOWN ON THESE DRAWINGS.]
3. BENCHMARK:
   CITY OF SANTA CLARA B-10A; TOP OF SCVWD BRASS DISK STAMPED "BM 271" AT THE BACK OF WALK OF THE SOUTHWEST CORNER THE BRIDGE DECK FOR GUADALUPE RIVER ON TASMAN DRIVE.
   ELEVATION: 25.07 (DATUM) NGVD 1929 (ADJUSTED 2005)
   LOCATED AT NORTHING: 6557.17 AND EASTING: 7680.00. COORDINATES LISTED ARE ON PROJECT COORDINATE SYSTEM.
4. FLOOD ZONE NOTE:
   THIS SITE IS IN FLOOD ZONE "X", AREAS OF 0.2% ANNUAL CHANCE FLOOD; AREAS OF 1% ANNUAL CHANCE FLOOD WITH AVERAGE DEPTHS OF LESS THAN 1 FOOT OR WITH DRAINAGE AREAS LESS THAN 1 SQUARE MILE; AND AREAS OF PROTECTED LEVEES FROM 1% ANNUAL CHANCE FLOOD.

   PER FLOOD INSURANCE RATE MAP COMMUNITY NO. 060350 0063 H DATED MAY 18, 2009.
5. BASIS OF BEARINGS:
   THE BEARING OF SOUTH 04°54'56" EAST TAKEN ON THE CENTERLINE OF CENTENNIAL BOULEVARD AS SHOWN ON THAT CERTAIN PARCEL MAP FILED FOR RECORD ON JULY 13, 1987 IN BOOK 575 OF MAPS AT PAGE 44, SANTA CLARA COUNTY RECORDS WAS TAKEN AS THE BASIS OF ALL BEARINGS SHOWN HEREON.
6. THIS MAP WAS PREPARED USING COMPUTER ASSISTED, PHOTOGRAMMETRIC METHODS BY HJW GEOSPATIAL, INC., IN OAKLAND CALIFORNIA. IN AREAS OF DENSE VEGETATION, ACCURACY OF CONTOURS MAY DEVIATE FROM ACCEPTED ACCURACY STANDARDS. THE DATE OF PHOTOGRAPHY WAS NOVEMBER 2, 2007 AS JOB NO. 07-036 AND APRIL 26, 2010 AS JOB NO. 10-051.
7. TOPOGRAPHIC SURVEY COMPLETED BY KIER & WRIGHT, APRIL 2013.

GENERAL NOTES

1. THE TANK SITE IS LOCATED NEAR ACTIVE BURROWING OWL HABITAT. THE CITY WILL MONITOR AND SURVEY THE OWLS 30 DAYS BEFORE THE START OF CONSTRUCTION AND PROVIDE ANY PRECAUTIONARY INFORMATION TO THE CONTRACTOR FOR WORKING IN THE AREA. CONTRACTOR SHALL EXERCISE CARE WHEN WORKING ON THE SITE AND TAKE ALL NECESSARY MEASURES TO PROTECT THE BURROWING OWLS AND THEIR HABITAT.

CIVIL NOTES

(IF THERE IS A CONFLICT BETWEEN THESE NOTES AND DIVISION 1 OF THE PROJECT SPECIFICATIONS THE MORE RESTRICTIVE REQUIREMENT SHALL TAKE PRECEDENCE.)

1. CONTRACTOR SHALL PROVIDE AT LEAST THREE, 24-HOUR EMERGENCY PHONE NUMBERS WITH THE POLICE, FIRE AND CITY ENGINEERING DEPARTMENTS.
2. CONTRACTOR SHALL POST ON THE SITE, EMERGENCY TELEPHONE NUMBERS FOR PUBLIC WORKS, AMBULANCE, POLICE, AND FIRE DEPARTMENTS.
3. THE CONTRACTOR SHALL IDENTIFY, LOCATE, AND PROTECT ALL UNDERGROUND FACILITIES.
4. THE CONTRACTOR SHALL HIRE A STREET CLEANING CONTRACTOR TO CLEAN UP DIRT AND DEBRIS FROM CITY STREETS THAT ARE ATTRIBUTABLE TO THE PROJECT'S CONSTRUCTION ACTIVITIES.
5. ALL GRADING SHALL BE PERFORMED IN SUCH A MANNER AS TO COMPLY WITH THE STANDARDS ESTABLISHED BY THE PROJECT SPECIFICATIONS AND AGENCIES HAVING JURISDICTION FOR AIRBORNE PARTICULATES (DUST).
6. ALL GRADING SHALL CONFORM TO APPROVED SPECIFICATIONS PRESENTED HEREON OR ATTACHED HERETO. ALL GRADING WORK SHALL BE OBSERVED AND APPROVED BY THE SOILS ENGINEER. THE SOILS ENGINEER SHALL BE NOTIFIED AT LEAST 48 HOURS BEFORE BEGINNING ANY GRADING. UNOBSERVED AND UNAPPROVED GRADING WORK SHALL BE REMOVED AND REDONE AT THE CONTRACTOR'S EXPENSE.
7. ALL MATERIALS, REQUIRED FOR THE COMPLETE EXECUTION OF THE PROJECT, SHALL BE FURNISHED AND INSTALLED BY THE CONTRACTOR UNLESS OTHERWISE NOTED.
8. THE CONTRACTOR SHALL PROVIDE ALL LIGHTS, SIGNS, BARRICADES, FLAGMEN OR OTHER DEVICES NECESSARY TO PROVIDE FOR PUBLIC SAFETY DURING THE CONSTRUCTION PERIOD.
9. THE CONTRACTOR SHALL BE RESPONSIBLE TO REPAIR OR REPLACE ANY EXISTING IMPROVEMENTS OR UNDERGROUND FACILITIES DAMAGED DURING THE CONSTRUCTION PERIOD.
10. THE CONTRACTOR SHALL BE RESPONSIBLE FOR OBTAINING ALL ENCROACHMENT, EXCAVATION, CONCRETE, ELECTRICAL, PLUMBING, ETC. PERMITS NECESSARY PRIOR TO BEGINNING CONSTRUCTION FOR ANY WORK.
11. THE CONTRACTOR SHALL HAVE A SUPERINTENDENT OR REPRESENTATIVE ON SITE AT ALL TIMES DURING CONSTRUCTION.
12. STORAGE OF CONSTRUCTION MATERIAL AND EQUIPMENT ON STREETS WILL NOT BE PERMITTED.
13. CONSTRUCTION EQUIPMENT SHALL BE PROPERLY MUFFLED. UNNECESSARY IDLING OF GRADING CONSTRUCTION EQUIPMENT IS PROHIBITED.
14. CONSTRUCTION EQUIPMENT, TOOLS, ETC. SHALL NOT BE CLEANED OR RINSED INTO A STREET, GUTTER OR STORM DRAIN.
15. A CONTAINED AND COVERED AREA ON-SITE SHALL BE USED FOR STORAGE OF CEMENT BAGS, PAINTS, FLAMMABLES, OILS, FERTILIZERS, PESTICIDES, OR ANY OTHER MATERIALS THAT HAVE POTENTIAL FOR BEING DISCHARGED TO THE STORM DRAIN SYSTEM BY WIND OR IN THE EVENT OF A MATERIAL SPILL.
16. ALL CONSTRUCTION DEBRIS SHALL BE GATHERED ON A REGULAR BASIS AND PLACED IN A DUMPSTER WHICH IS EMPTIED OR REMOVED WEEKLY. WHEN FEASIBLE, TARPS SHALL BE USED ON THE GROUND TO COLLECT FALLEN DEBRIS OR SPLATTERS THAT COULD CONTRIBUTE TO STORMWATER POLLUTION.
17. ANY TEMPORARY ON-SITE CONSTRUCTION PILES SHALL BE SECURELY COVERED WITH A TARP OR OTHER DEVICE TO CONTAIN DEBRIS.
18. CONCRETE TRUCKS AND CONCRETE FINISHING OPERATIONS SHALL NOT DISCHARGE WASH WATER INTO THE STREET GUTTERS OR DRAINS.
19. IT IS THE CONTRACTOR'S RESPONSIBILITY TO VERIFY IF EXISTING UTILITIES WITHIN THE PROJECT LIMITS ARE SERVING EXISTING FACILITIES OR NOT. THOSE THAT SERVE EXISTING FACILITIES SHALL BE RELOCATED IN SUCH A MANNER AS TO MAINTAIN UNINTERRUPTED SERVICE. ANY EXISTING UTILITIES WITHIN THE PROJECT LIMITS THAT DO NOT SERVE ANY OTHER EXISTING FACILITIES TO REMAIN SHALL BE DEMOLISHED OR ABANDONED IN PLACE AS INDICATED ON THE PLANS.
20. CONSTRUCTION CONTRACTOR AGREES THAT IN ACCORDANCE WITH GENERALLY ACCEPTED CONSTRUCTION PRACTICES, CONSTRUCTION CONTRACTOR WILL BE REQUIRED TO ASSUME SOLE AND COMPLETE RESPONSIBILITY FOR JOB SITE CONDITIONS DURING THE COURSE OF CONSTRUCTION OF THE PROJECT, INCLUDING SAFETY OF ALL PERSONS AND PROPERTY; THAT THE REQUIREMENT SHALL BE MADE TO APPLY CONTINUOUSLY AND NOT BE LIMITED TO NORMAL WORKING HOURS AND CONSTRUCTION CONTRACTOR FURTHER AGREES TO DEFEND, INDEMNIFY AND HOLD DESIGN PROFESSIONAL AND CITY HARMLESS FROM ANY AND ALL LIABILITY, REAL OR ALLEGED IN CONNECTION WITH THE PERFORMANCE OF WORK ON THE PROJECT, EXCEPTING LIABILITY ARISING FROM SOLE NEGLIGENCE OF DESIGN PROFESSIONAL.
21. UNLESS SPECIFIC WRITTEN PERMISSION IS GRANTED BY CITY ENGINEER, CONSTRUCTION HOURS SHALL BE FROM MONDAY THROUGH FRIDAY, 7:00 A.M. TO 5:00 P.M. OTHER THAN HOLIDAYS. ALL HEAVY EQUIPMENT AND ANY INTERNAL COMBUSTION ENGINES SHALL BE FITTED WITH ADEQUATE MUFFLERS. NOISE GENERATING EQUIPMENT, INCLUDING PORTABLE POWER GENERATORS AND AIR COMPRESSORS, SHALL BE LOCATED AT THE FURTHEST DISTANCE POSSIBLE FROM OCCUPIED RESIDENCES. THE CONTRACTOR SHALL REIMBURSE THE CITY FOR ANY OVERTIME ASSOCIATED WITH WORK OUTSIDE OF CONSTRUCTION HOURS ABOVE. CITY ENGINEER MAY ALLOW WORK TO BE PERFORMED ON SATURDAYS FROM 9:00 A.M. TO 6:00 P.M. OTHER THAN HOLIDAYS.

PUBLIC WATER SYSTEM NOTES

1. WATER SYSTEM CONSTRUCTION SHALL CONFORM TO THE PROJECT PLANS, AND TO THE CITY OF SANTA CLARA WATER DEPARTMENT STANDARD DRAWINGS AND SPECIFICATIONS.
2. INFORMATION ON MATERIALS PROPOSED TO BE USED IN CONSTRUCTING WATER SYSTEM FACILITIES SHALL BE SUBMITTED TO THE WATER DEPARTMENT FOR REVIEW AND APPROVAL PRIOR TO THE BEGINNING OF ANY CONSTRUCTION OF WATER FACILITIES.
3. A PRE-CONSTRUCTION MEETING SHALL BE HELD WITH THE CITY WATER DEPARTMENT IN ATTENDANCE PRIOR TO ANY WORK BEING ALLOWED TO BEGIN ON THE PUBLIC WATER SYSTEM. CALL (408) 615-2052 BETWEEN 8:00 AM AND 5:00 PM MONDAY THROUGH FRIDAY EXCEPT HOLIDAYS. NOTIFY THE CITY WATER INSPECTOR A MINIMUM OF ONE WORKING DAY PRIOR TO REQUIRED INSPECTIONS.
4. WATER FACILITIES SHALL BE CONSTRUCTED AS SHOWN ON THE PLANS. ALL CHANGES MUST BE APPROVED BY THE WATER INSPECTOR PRIOR TO BEING CONSTRUCTED. A REVISED DRAWING MUST BE APPROVED BY THE WATER SYSTEM ENGINEER.
5. CLEARANCES:
   - 5.1. ONE FOOT MINIMUM VERTICAL CLEARANCE BETWEEN WATER AND RECYCLED WATER MAINS AND SERVICES AND OTHER FACILITIES UNLESS OTHERWISE NOTED ON THE PLANS.
   - 5.2. TEN FEET MINIMUM HORIZONTAL CLEARANCE BETWEEN WATER AND RECYCLED WATER MAINS AND SERVICES AND SANITARY MAINS AND SERVICES AND TREES.
   - 5.3. FIVE FEET MINIMUM HORIZONTAL CLEARANCE BETWEEN WATER AND STORM MAINS AND LATERALS AND OTHER GENERAL UTILITIES OR FACILITIES.
6. CONSTRUCTION OF WATER MAINS AND SERVICES CANNOT BEGIN UNTIL SITE IS AT SUB GRADE.
7. CITY WILL PERFORM ALL TAPS TO THE WATER MAIN. CONTRACTOR IS RESPONSIBLE FOR INSTALLING THE TAPPING SLEEVE AND VALVE, AND PREPARING THE SITE FOR CITY TO PERFORM THE TAP.
8. WATER MAINS SHALL BE AWWA C900, C905 DR 14 MINIMUM, STANDARD PRESSURE CLASS 200 FOR POLYVINYL CHLORIDE (P.V.C.) PRESSURE PIPE, AWWA C150, C151, C104 STANDARD PRESSURE CLASS 350 FOR DUCTILE IRON (DIP) PRESSURE PIPE, OR TYPE K COPPER AS SHOWN ON THE PLANS. RECYCLED WATER MAINS SHALL CONFORM TO CITY WATER MAIN STANDARDS WITH THE FOLLOWING EXCEPTIONS: RECYCLED WATER P.V.C. MAINS SHALL BE PURPLE AND LABELED RECYCLED WATER. DIP SHALL BE ENCASED IN PURPLE POLY WRAP.
9. THE CONTRACTOR SHALL RESTRAIN ALL PIPE JOINTS, FITTINGS AND DEADENDS USING MECHANICALLY RESTRAINED DEVICES IN ACCORDANCE WITH CITY REQUIREMENTS.
10. ALL PUBLIC WATER MAINS AND SERVICES SHALL HAVE A MINIMUM OF FOUR INCHES (4") OF SAND BEDDING UNDER PIPE AND 12" OF SAND BEDDING OVER TOP OF PIPE. SAND SHALL CONFORM TO WATER DEPARTMENT STANDARD DRAWING NUMBER 23. THE REMAINING TRENCH SHALL BE BACKFILLED AND COMPACTED PER CITY STANDARDS AND COMPACTED TO 95% RELATIVE DENSITY.
11. CONTRACTOR SHALL DISINFECT AND FLUSH ALL NEW AND REPAIRED PORTIONS OF THE PUBLIC WATER SYSTEM ACCORDING TO WATER DEPARTMENT SPECIFICATIONS. CONTRACTOR MUST COMPLY WITH THE CITY'S NON-POINT SOURCE CONTROL PROGRAM. THE INITIAL BACTERIOLOGICAL TEST SHALL BE PERFORMED BY THE CITY AT THE CITY'S COST. SUBSEQUENT TESTS REQUIRED DUE TO FAILED INITIAL BACTERIOLOGICAL SAMPLES SHALL BE PERFORMED BY THE CITY AT CONTRACTOR'S EXPENSE.
12. PRESSURE TESTS SHALL BE PERFORMED BY THE CONTRACTOR AT 200 PSI FOR A MINIMUM OF TWO HOURS.
13. THE CONTRACTOR IS RESPONSIBLE FOR KEEPING A SET OF CURRENT, THOROUGH, AND ACCURATE AS-BUILT DRAWINGS AT THE PROJECT SITE. THEY SHALL INCLUDE CENTER TO CENTER DIMENSIONS BETWEEN ALL FITTINGS, VALVES, SERVICES, DEADMEN, TIE-BACKS, CHANGES IN PIPE TYPE, ETC. AND SHALL INCLUDE A DIMENSION REFERENCING A TRACEABLE FEATURE ON THE EXISTING WATER SYSTEM. THE UP-DATED AS-BUILT DRAWINGS SHALL BE AVAILABLE FOR THE INSPECTORS REVIEW AT ALL TIMES. THE PROJECT WILL NOT BE CONSIDERED FOR ACCEPTANCE NOR ANY METERS ALLOWED TO BE TURNED ON UNTIL THE AS-BUILT DRAWINGS ARE COMPLETED, TURNED IN TO THE INSPECTOR, VERIFIED, AND ACCEPTED.
14. ALL WATER USE SHALL BE METERED EXCEPT FOR USE IN DISINFECTION AND FLUSHING OF WATER MAINS.
15. NO WATER VALVES ON THE EXISTING SYSTEM NOR ANY NEW VALVE CONNECTED TO THE EXISTING SYSTEM SHALL BE OPENED OR CLOSED BY ANYONE EXCEPT AUTHORIZED WATER DEPARTMENT PERSONNEL.
16. MAINTAIN, SECURE, AND PROTECT ANY EXISTING WATER SYSTEM FACILITY IN PLACE UNTIL THE PROPOSED WATER SYSTEM IS COMPLETED AND ACTIVATED.
17. PARTS FROM ABANDONED CITY FACILITIES, INCLUDING METERS AND VALVES, SHALL BE RETURNED TO THE WATER DEPARTMENT INSPECTOR.
18. THE WATER DEPARTMENT WILL PLACE A HOLD ON THE FINAL INSPECTION ON ALL OR PART OF THE DEVELOPMENT UNTIL:
   - 18.1. AN ACCURATE AND COMPLETE SET OF FIELD AS-BUILT DRAWINGS FOR THE PUBLIC WATER SYSTEM HAS BEEN SUBMITTED TO AND APPROVED BY THE WATER DEPARTMENT.
   - 18.2. PUNCH LIST ITEMS HAVE BEEN CORRECTED.
   - 18.3. ANY WATER OR PUBLIC UTILITY EASEMENTS REQUIRED FOR THE PROJECT ARE RECORDED WITH THE COUNTY.

GHD Inc.
1735 North First Street Suite 301 San Jose California 95112 USA
T 1 408 451 9615 F 1 408 451 9665
W www.ghd.com

DATE	REVISION	BY

CITY OF SANTA CLARA
WATER & SEWER UTILITIES

NORTHSIDE TANKS SITE IMPROVEMENTS PROJECT
NOTES

APPROVED DATE
DIRECTOR OF WATER & SEWER UTILITIES

PROJ. NO.	592-1423-80300-7054-(I)30148		
DESIGNED BY	NK	DRAWN BY	CF
CHECKED BY	AC	YEAR	2014
DATE	JULY 2014	BLK. BK. PG.	94
DRAWING NO.	G002	SHT. 2	OF 49
HORIZ.	NOTED	VERT. –	DWG. NO. W-3143-4

Plot Date: 24 June 2014 - 12:20 AM Plotted by: Ming Yee Cad File No: G:\11205 City of Santa Clara\8410306 Northside Tanks Piping Reconfig\06-CAD\Sheets\8410306 G002.dwg

CIVIL ABBREVIATIONS

Ø	DIAMETER
AB	AGGREGATE BASE
ABDN	ABANDONED
AC	ACRE, ASPHALT CONCRETE
ACP	ASBESTOS CEMENT PIPE
ACM	ASBESTOS CONTAINING MATERIAL
AD	AREA DRAIN
AGG	AGGREGATE
ALGN	ALIGNMENT
ARV	AIR RELEASE VALVE
ASB	AGGREGATE SUBBASE
ASPH	ASPHALT
BC	BEGIN CURVE
BEG	BEGIN
BFP	BACK FLOW PREVENTER
BLDC	BUILDING CORNER
BLDG	BUILDING
BMP	BEST MANAGEMENT PRACTICES
BOD	BOTTOM OF DOCK
BOL	BOLLARD
BSW	BACK OF SIDEWALK
BVC	BEGIN VERTICAL CURVE
BW	FINISHED GRADE AT BOTTOM OF WALL
C	CONCRETE OR CIVIL
CB	CATCH BASIN
C&G	CURB AND GUTTER
CG&S/W	CURB, GUTTER & SIDEWALK
CI	CAST IRON OR CURB INLET
CIP	CAST IRON PIPE
CL	CENTERLINE
CLR	CLEAR
CMN	COMMUNICATION
CMP	CORRUGATED METAL PIPE
CO	CLEAN OUT
CONC	CONCRETE
CONST	CONSTRUCTION OR CONSTRUCT
CONF	CONFORM TO EXISTING
CR	CONDENSATE RETURN
CSC	CITY OF SANTA CLARA
CU	CUBIC
CY	CUBIC YARD
D=	DELTA (CURVE)
DCDA	DOUBLE CHECK DETECTOR ASSEMBLY
DEMO	DEMOLISH
DEPT	DEPARTMENT
DET	DETAIL
DI	DROP INLET, DUCTILE IRON
DIA	DIAMETER
DIP	DUCTILE IRON PIPE
DOM	DOMESTIC
DW	DOMESTIC WATER
DWG	DRAWING
E	EASTING COORDINATE, ELECTRIC
EC	END CURVE
EG	EXISTING GRADE
EL, ELEV	ELEVATION
ELEC	ELECTRICAL
EP	EDGE OF PAVEMENT
EVA	EMERGENCY VEHICLE ACCESS
EX,EXIST, (E)	EXISTING
(F)	FUTURE
FA	FIRE ALARM
F/C,FC	FACE OF CURB
FD	FOUND
FDC	FIRE DEPARTMENT CONNECTION
FF,FFE	FINISHED FLOOR ELEVATION
FG	FINISH GRADE
FH	FIRE HYDRANT
FIPT	FEMALE IRON PIPE THREAD
FL	FLOW LINE, FLANGE
FLG	FLANGE
FM	FLOWMETER
FOUND	FOUNDATION
FS	FINISHED SURFACE
FT	FOOT, FEET
FW	FIRE WATER
G	GAS, GROUND ELEVATION
GB	GRADE BREAK
GI	GALVANIZED IRON
GRD, G	GROUND
GV	GATE VALVE
HMA	HOT MIX ASPHALT
HORIZ	HORIZONTAL
HT	HEIGHT
HP	HIGH POINT
INV	INVERT
INST	INSTALL
IRR	IRRIGATION
JP	JOINT POLE
JT	JOINT TRENCH
L	LEFT
L=	LENGTH (CURVE)
LF	LINEAR FEET
LAT	LATERAL
LIP	LIP OF GUTTER
LP	LIGHT POLE, LOW POINT
LPFH	FIRE HYDRANT
LS	LANDSCAPE
LSA	LANDSCAPE ARCHITECT
MA	MEDICAL AIR
MAX	MAXIMUM
MEP	MECHANICAL/ELECTRICAL/PLUMBING
MH	MANHOLE
MIN	MINIMUM
MIPT	MALE IRON PIPE THREAD
MJ	MECHANICAL JOINT
MPVC	MIDPOINT OF VERTICAL CURVE
MON	MONUMENT
N	NORTHING COORDINATE
(N)	NEW
NIC	NOT IN CONTRACT
NO	NUMBER
NTS	NOT TO SCALE
OHE	OVERHEAD ELECTRIC
O.R.	OFFICIAL RECORDS
(P)	PROPOSED
P	PAVEMENT ELEVATION
PA	PLANTER AREA
PB	PULL BOX
PCC	POINT OF COMPOUND CURVATURE
	PORTLAND CEMENT CONCRETE
PE	PLAIN END
PED	PEDESTRIAN
PERF	PERFORATED
PH	POTHOLE
PID	POINT ID
PIV	POST INDICATOR VALVE
PL	PROPERTY LINE
PM	PARKING METER
PMH	POWER MANHOLE
PO	PUSH-ON
POC	POINT ON CURVE
POI	POINT OF INTERSECTION
PP	POWER POLE
PRC	POINT OF REVERSE CURVATURE
PRV	PRESSURE REDUCING VALVE
PRUE	PRIVATE UTILITY EASEMENT
PT	POINT OF TANGENCY
PUE	PUBLIC UTILITY EASEMENT
PVC	POLYVINYL CHLORIDE PIPE
R	RIGHT
R=	RADIUS (CURVE)
RC	RELATIVE COMPACTION
RCP	REINFORCED CONCRETE PIPE
RJ	RESTRAINED JOINT
RP	RADIUS POINT
RPBFP	REDUCED PRESSURE BACKFLOW PREVENTER
RPPA	REDUCED PRESSURE PRINCIPLE ASSEMBLY
RSC	RECEIVING AND SUPPORT CENTER
RW	RECYCLED WATER
R/W, ROW	RIGHT OF WAY
S	SOUTH, SLOPE
S.A.D.	SEE ARCHITECTURAL DRAWINGS
SCVWD	SANTA CLARA VALLEY WATER DISTRICT
SD	STORM DRAIN
SDCB	STORM DRAIN CATCH BASIN
SDI	STORM DRAIN INLET
SDMH	STORM DRAIN MANHOLE
SDCO	STORM DRAIN CLEANOUT
S.E.D.	SEE ELECTRICAL DRAWINGS
SF	SILT FENCE
SG	SUBGRADE
SHLDR	SHOULDER
SHT	SHEET
SL	STREETLIGHT
S.L.D.	SEE LANDSCAPE DRAWINGS
SMH	SIGNAL MANHOLE
S.M.D	SEE MECHANICAL DRAWINGS
S.P.D	SEE PLUMBING DRAWINGS
SS	SANITARY SEWER
S.S.D.	SEE STRUCTURAL DRAWINGS
SSCO	SANITARY SEWER CLEANOUT
SSFM	SANITARY SEWER FORCE MAIN
SSMH	SANITARY SEWER MANHOLE
SSPS	SANITARY SEWER PUMP STATION
STA	STATION
STD	STANDARD
STL	STEEL
S/W	SIDEWALK
SVP	SILICON VALLEY POWER
T	TELEPHONE
TC	TOP OF CURB
TD	TRENCH DRAIN
TEL	TELEPHONE
TEMP	TEMPORARY
TFC	TOP FACE OF CURB
THK	THICK
TOD	TOP OF DOCK
TOE	TOE OF SLOPE
TW,TOW	TOP OF WALL
TS	TOP OF SLAB
TYP	TYPICAL
UON	UNLESS OTHERWISE NOTED
U/G	UNDERGROUND
VC	VERTICAL CURVE
W	WEST, WATER
WM	WATER METER
WV	WATER VALVE
WWF	WELDED WIRE FABRIC
W/	WITH
YDS	YARDS

NOTES:

1. NOT ALL ABBREVIATIONS SHOWN ARE USED IN THIS PROJECT.

CIVIL LEGEND

NEW	EXISTING	
		6" CURB & GUTTER
		EDGE OF AC PAVEMENT
		6" VERTICAL CURB
DW	DW	DOMESTIC WATER MAIN
E	E	ELECTRIC LINE
FW	FW	FIRE WATER MAIN
G	G	GAS LINE
IRR	IRR	IRRIGATION LINE
OH	OH	OVERHEAD WIRES
OHE	OHE	OVERHEAD ELECTRIC
OHT	OHT	OVERHEAD TELEPHONE
RW	RW	RECYCLED WATER
SS	SS	SANITARY SEWER LINE
	SD	STORM DRAIN LINE
SL	SL	STREET LIGHT CONDUIT
TC	TC	TELECOMMUNICATIONS
TEL	TEL	TELEPHONE LINE
TV	TV	TELEVISION LINE
W	W	WATER LINE
UGE	UGE	UNDERGROUND ELECTRIC
		TRENCH DRAIN
		METAL BEAM GUARD RAIL
		SILT FENCE
x	x	CHAIN LINK FENCE
		FLOW LINE
89	89	CONTOUR ELEVATION LINE
		CENTER LINE
		PROPERTY LINE
		MONUMENT LINE
		EASEMENT LINE
TC 24.52 FG		FINISH GRADE

NEW	EXISTING	
2.0%	2.0%	SURFACE DRAINAGE SLOPE
x 95.94	x 95.94	SPOT ELEVATION
		GRADE BREAK
		LIMIT OF WORK/GRADING
	IRR	IRRIGATION BOX
	GM	GAS METER
		GAS VALVE
		WATER METER
		WATER VALVE
		WATER METER OR BFP
		FIRE HYDRANT
		FIRE DEPARTMENT CONNECTION
		WATER TAPPING SADDLE
		SEWER MANHOLE
	SSCO	SEWER CLEANOUT
	SLP	SEWER LAMP HOLE
	SV	SEWER VENT
		STORM DRAIN MANHOLE
		CATCH BASIN
		CURB INLET
	DI	DRAINAGE INLET
SDCO	SDCO	STORM DRAIN CLEANOUT
	E	ELECTRIC VAULT COVER
		PULL BOX
HVE	HVE	HIGH VOLTAGE ELECTRIC
	T	TELEPHONE MANHOLE
		POWER POLE
	GUY	GUY WIRE & ANCHOR
	JP	JOINT POLE
		STREET LIGHT
		ELECTROLIER

NEW	EXISTING	
		TRAFFIC SIGNAL
	TS	TRAFFIC SIGNAL
		PEDESTRIAN LIGHT
		PEDESTRIAN PUSH BUTTON
	DET	CROSSWALK DETECTOR
SL	SL	STREET LIGHT PULLBOX
		SIGN (AS NOTED)
		THRUST BLOCK
		CAP
		GATE VALVE
		BUTTERFLY VALVE
		DEMO

ANNOTATION

1 KEYNOTE

1 DEMOLITION NOTE

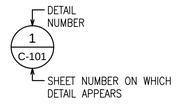

DETAIL INDICATOR

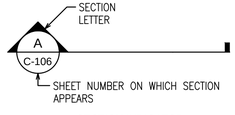

SECTION INDICATOR

GHD Inc.
1735 North First Street Suite 301 San Jose California 95112 USA
T 1 408 451 9615 F 1 408 451 9665
W www.ghd.com

DATE	REVISION	BY

CITY OF SANTA CLARA
WATER & SEWER UTILITIES

NORTHSIDE TANKS SITE IMPROVEMENTS PROJECT
CIVIL SYMBOLS, LEGEND, AND ABBREVIATIONS

APPROVED DATE
DIRECTOR OF WATER & SEWER UTILITIES

PROJ. NO.	592-1423-80300-7054-(I)30148		
DESIGNED BY	NK	DRAWN BY	CF
CHECKED BY	AC	YEAR	2014
DATE	JULY 2014	BLK. BK. PG.	94
DRAWING NO.	C001	SHT. 3	OF 49
HORIZ.	NOTED	VERT. –	DWG. NO. W-3143-4

Plot Date: 24 June 2014 - 12:09 AM Plotted by: Ming Yee Cad File No: G:\11205 City of Santa Clara\8410306 Northside Tanks Piping Reconfig\06-CAD\Sheets\8410306 C001.dwg

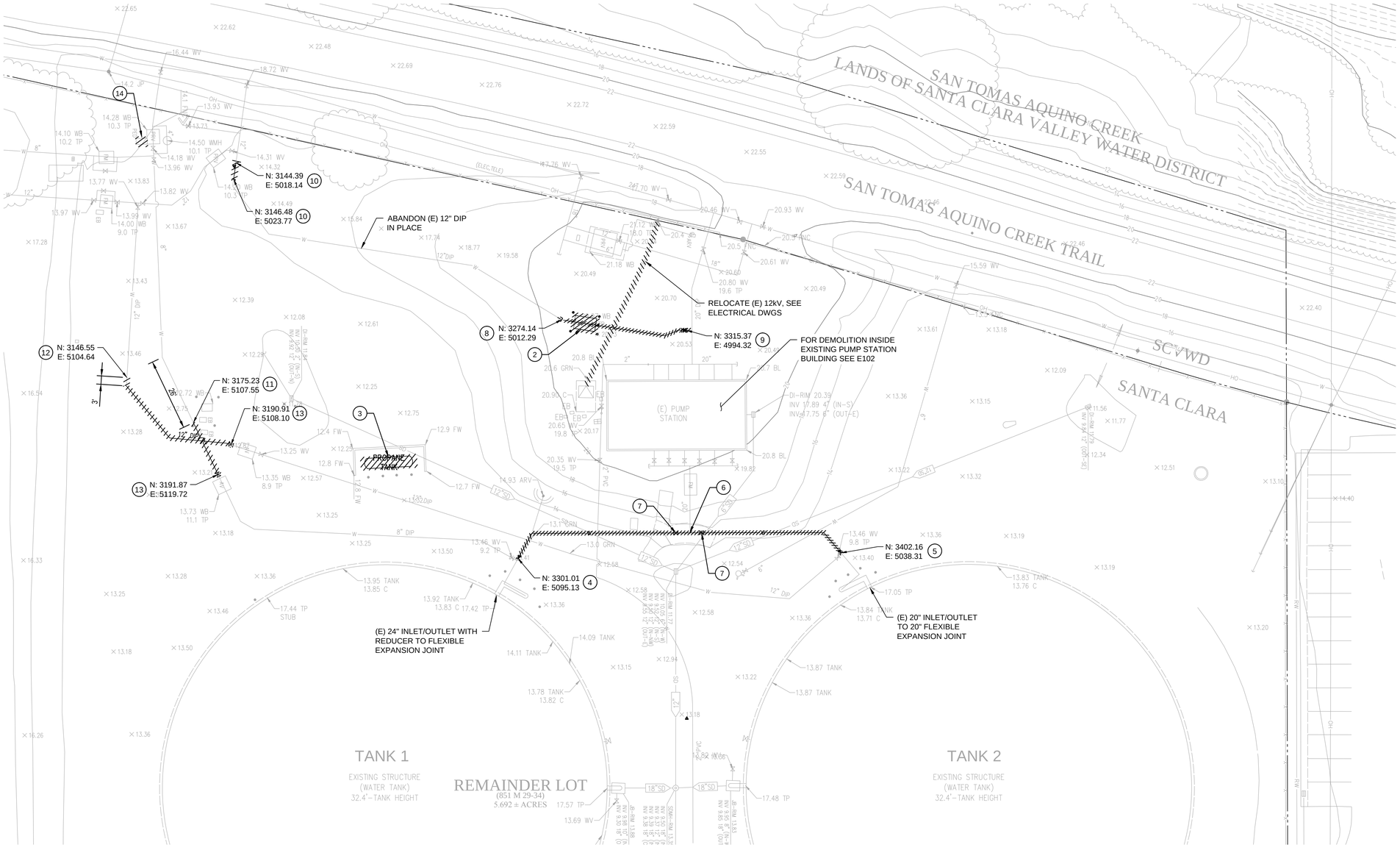

SHEET NOTES

1. PIPE DEMOLITION SHOWN ON THIS SHEET PREPARES THE SITE FOR NEW PIPING WORK SHOWN ON C101.
2. SEE SPECIFICATION SECTION 01100SP FOR CONSTRAINTS ON SEQUENCE OF WORK.

◯ DEMOLITION NOTES

1. CUTTING, CAPPING, AND ABANDONMENT OF EXISTING UTILITIES SHALL BE DONE PER SPECIFICATION SECTION 01100.
2. REMOVE AND SALVAGE CONCRETE VAULT, PRV, AIR RELEASE VALVE, AND BOLLARDS. RETURN TO THE CITY PER SPECIFICATION SECTION 01100.
3. REMOVE PROPANE TANK AND FOUNDATIONS. CUT EXISTING PROPANE PIPE FLUSH WITH EXISTING GRADE AND CAP WITH 12" CONCRETE. WALL SHALL REMAIN IN PLACE.
4. CUT AND REMOVE 20" DIP, AND PROVIDE CAP AND THRUST BLOCK PER DETAIL 1/C504.
5. CUT AND REMOVE 20" DIP, AND PROVIDE CAP AND THRUST BLOCK PER DETAIL 2/C504.
6. REMOVE 20" DIP FLG 90° ELBOW, VERTICAL PIPE, AND TEE PER DETAIL 6/C504.
7. REMOVE 20" BUTTERFLY VALVES (2) AND EXTENSIONS.
8. CUT AND REMOVE 12" DIP AT BEND, AND PROVIDE PLUG PER DETAIL 3/C504.
9. CUT AND REMOVE 12" DIP, AND PROVIDE CAP AND THRUST BLOCK PER DETAIL 4/C504.
10. CUT AND REMOVE 12" DIP, AND PROVIDE PLUG PER DETAIL 5/C504. NEW FIRE HYDRANT ASSEMBLY WILL BE PROVIDED PER C101.
11. CUT AND REMOVE 8" DIP 26' FROM EXISTING BEND.
12. CUT AND REMOVE 12" DIP 3' FROM EXISTING BEND.
13. REMOVE AND SALVAGE GATE VALVE. LEAVE FLANGE OF ADJOINING PIPE FOR NEW CONNECTION PER DETAIL 4/C502.
14. RELOCATE AND REFURBISH INSTRUMENTATION CABINET AND CONCRETE-BLOCK PAD FOUNDATION. SALVAGE TURBIDIMETER AND CONTENTS INSIDE CABINET, AND RETURN TO CITY PER SECTION 01100. EXISTING INSTRUMENTATION CABINET AND CONCRETE-BLOCK FOUNDATION TO BE ABANDONED IN PLACE; CITY TO PERFORM DEMO. CONDUIT TO REMAIN IN PLACE FOR FUTURE USE.

1 / C100 **SITE DEMOLITION PLAN**

1"=20' 0 20' 40'

GHD Inc.
1735 North First Street Suite 301 San Jose California 95112 USA
T 1 408 451 9615 F 1 408 451 9665
W www.ghd.com

6/27/14

DATE	REVISION	BY

CITY OF SANTA CLARA
WATER & SEWER UTILITIES

NORTHSIDE TANKS SITE IMPROVEMENTS PROJECT
SITE DEMOLITION PLAN

APPROVED DATE
DIRECTOR OF WATER & SEWER UTILITIES

PROJ. NO.	592-1423-80300-7054-()30148		
DESIGNED BY	NK	DRAWN BY	CF
CHECKED BY	AC	YEAR	2014
DATE	JULY 2014	BLK. BK. PG.	94
DRAWING NO.	C100	SHT. 4	OF 49
HORIZ.	NOTED	VERT. –	DWG. NO. W-3143-4

Plot Date: 24 June 2014 - 12:23 AM Plotted by: Ming Yee Cad File No: G:\11205 City of Santa Clara\8410306 Northside Tanks Piping Reconfig\06-CAD\Sheets\8410306 C100.dwg

SHEET NOTES

1. REPLACE PILOT CONTROL SYSTEM ON EXISTING ALTITUDE VALVE, CLA-VAL MODEL 210G W/ PRESSURE-SUSTAINING SETTING. PROVIDE & INSTALL NEW PILOT CONTROL SYSTEM TO PROVIDE REMOTE VALVE-CLOSING CAPABILITY. THE NEW PILOT CONTROL SYSTEM SHALL ENABLE THE VALVE TO OVERRIDE THE VALVE-OPEN SETTING.
2. PROVIDE SERVICE SADDLE FOR 2-INCH FLUSH VALVE. (4 / C506)
3. IF DISCREPANCIES ARE FOUND BETWEEN EXISTING CONDITIONS AND THE PLANS, IMMEDIATELY NOTIFY THE CITY OF SUCH DISCREPANCIES.
4. RELOCATE EXISTING ELECTRICAL CONDUIT PER DWG E-101. SVP TO PERFORM WIRING AFTER COMPLETION OF CONDUIT RELOCATION. COORDINATE ALL RELOCATION WORK WITH SVP.
5. SEE CITY OF SANTA CLARA STANDARD DETAILS SHOWN ON SHEETS C501 AND C502.
6. CONTRACTOR SHALL POTHOLE ALL TIE-IN LOCATIONS TO EXISTING TO CONFIRM LOCATION.

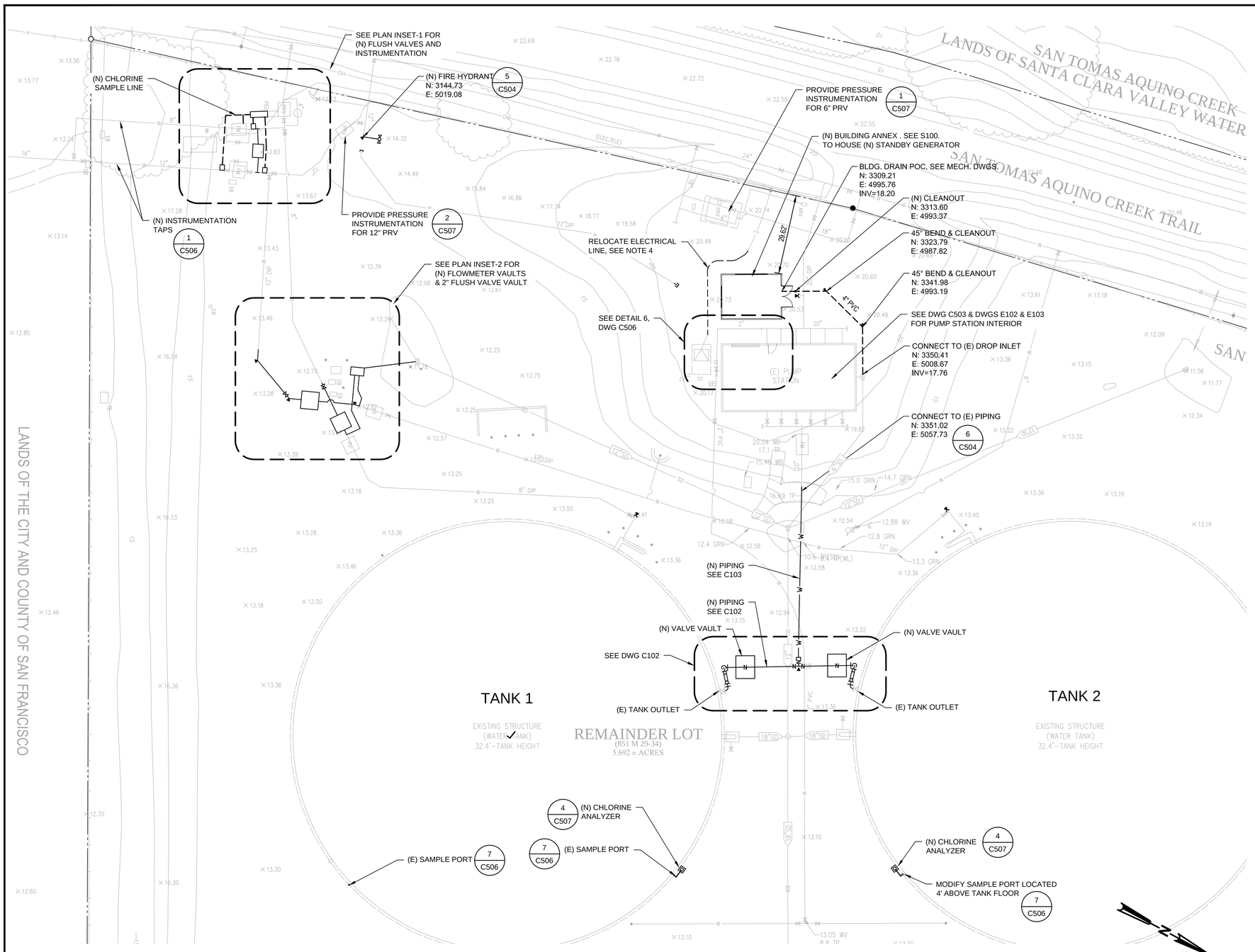

1 / C101 **OVERALL SITE PLAN**

1"=20' (0, 20', 40')

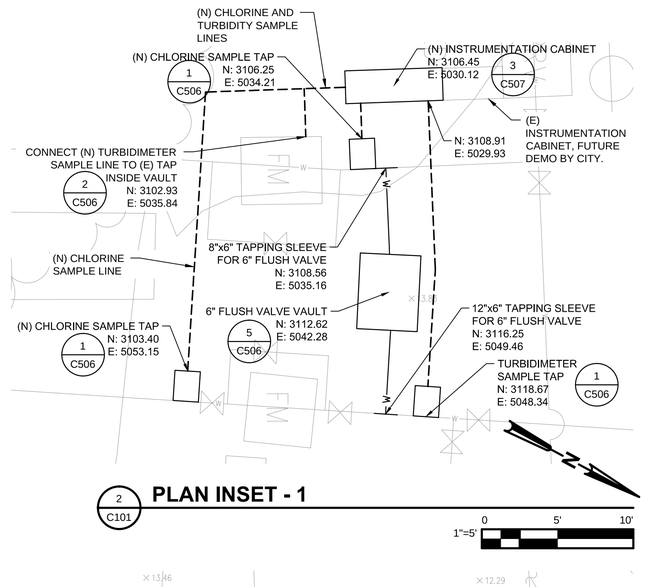

2 / C101 **PLAN INSET - 1**

1"=5' (0, 5', 10')

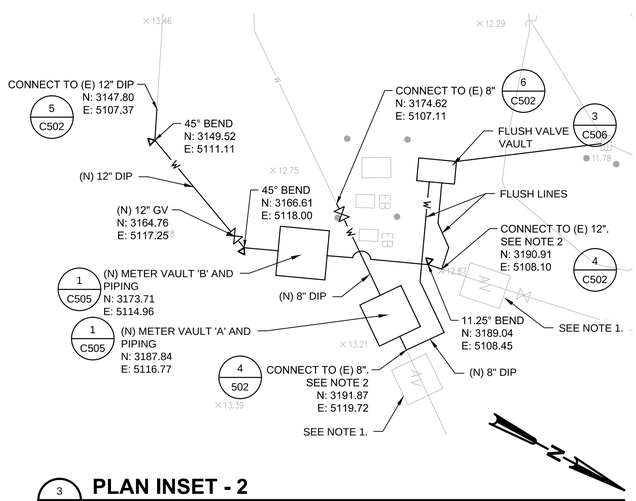

3 / C101 **PLAN INSET - 2**

1"=10' (0, 10', 20')

GHD Inc.
1735 North First Street Suite 301 San Jose California 95112 USA
T 1 408 451 9615 F 1 408 451 9665
W www.ghd.com

6/27/14

DATE	REVISION	BY

CITY OF SANTA CLARA
WATER & SEWER UTILITIES

NORTHSIDE TANKS SITE IMPROVEMENTS PROJECT
OVERALL SITE PLAN

APPROVED DATE
DIRECTOR OF WATER & SEWER UTILITIES

PROJ. NO.	592-1423-80300-7054-(I)30148		
DESIGNED BY	NK	DRAWN BY	CF
CHECKED BY	AC	YEAR	2014
DATE	JULY 2014	BLK. BK. PG.	94
DRAWING NO.	C101	SHT. 5	OF 49
HORIZ.	NOTED	VERT. –	DWG. NO. W-3143-4

Plot Date: 24 June 2014 - 12:23 AM Plotted by: Ming Yee Cad File No: G:\11205 City of Santa Clara\8410306 Northside Tanks Piping Reconfig\06-CAD\Sheets\8410306 C101.dwg

SHEET NOTES

1. ALL DIP FITTINGS SHOWN IN THIS PROFILE SHALL BE FLANGED.
2. 18" TEE THRUST BLOCK. BEARING AREA = 37 SF. PROVIDE THRUST BLOCK PER DETAIL 1/C502 AS APPLICABLE.
3. SEE CITY OF SANTA CLARA STANDARD DETAILS SHOWN ON SHEETS C501 AND C502.

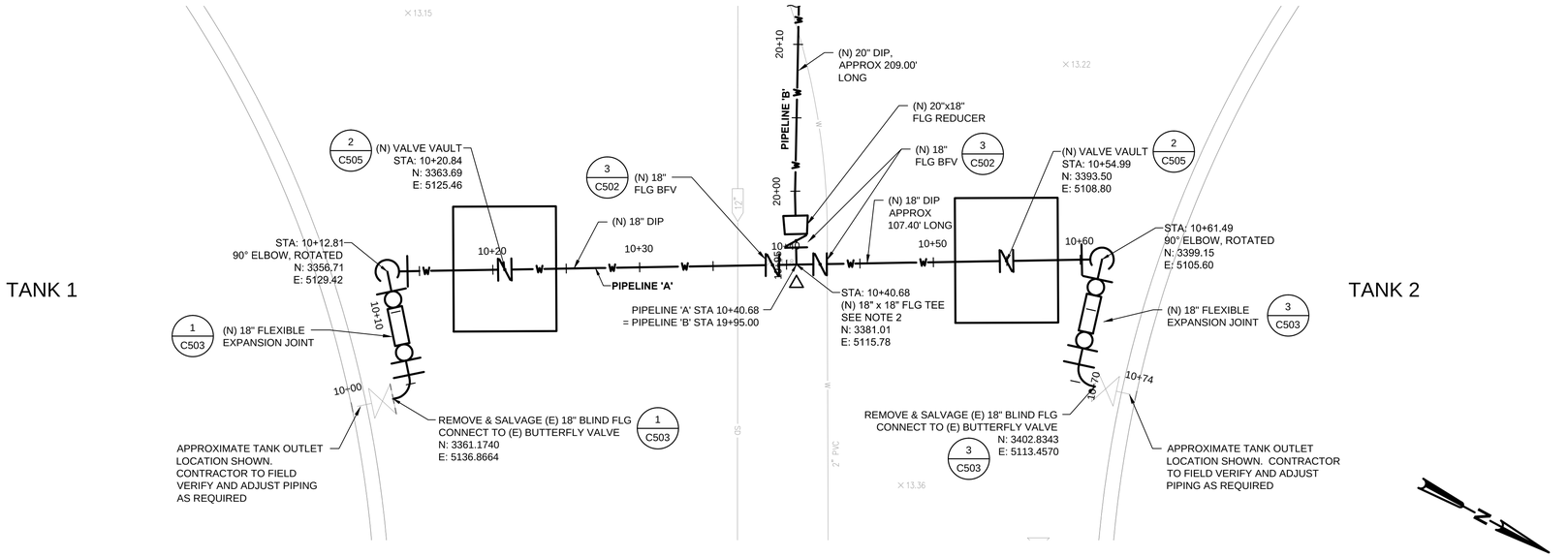

1/C102 PIPELINE "A" WATER PLAN

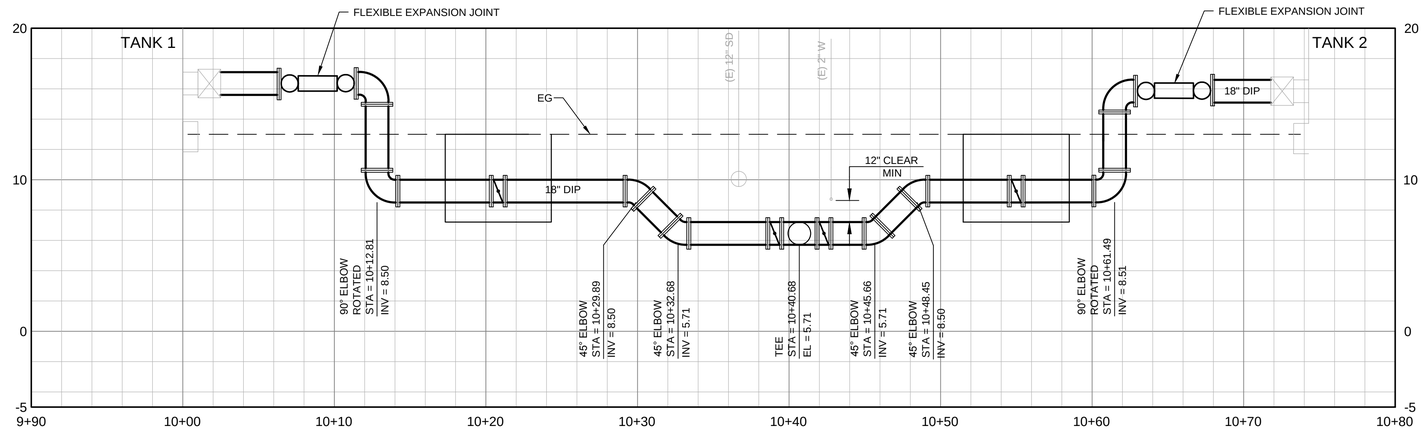

2/C102 PIPELINE "A" WATER PROFILE

GHD Inc.			CITY OF SANTA CLARA WATER & SEWER UTILITIES	PROJ. NO. 592-1423-80300-7054-(I)30148
			NORTHSIDE TANKS SITE IMPROVEMENTS PROJECT WATER PLAN AND PROFILE 1	DESIGNED BY NK / DRAWN BY CF CHECKED BY AC / YEAR 2014 DATE JULY 2014 / BLK. BK. PG. 94 DRAWING NO. C102 / SHT. 6 OF 49
DATE	REVISION	BY	APPROVED DATE DIRECTOR OF WATER & SEWER UTILITIES	HORIZ. NOTED VERT. – / DWG. NO. W-3143-4

Plot Date: 24 June 2014 - 12:10 AM Plotted by: Ming Yee Cad File No: G:\11205 City of Santa Clara\8410306 Northside Tanks Piping Reconfig\06-CAD\Sheets\8410306 C102.dwg

SHEET NOTES

1. CONTRACTOR SHALL EXPOSE AND VERIFY LOCATION OF EXISTING PIPE AT THE CONNECTION LOCATION. VERIFY EXISTING SIZES, MATERIALS, AND DIMENSIONS BEFORE ORDERING THE CONNECTION MATERIALS.
2. SEE CITY OF SANTA CLARA STANDARD DETAILS SHOWN ON SHEETS C501 AND C502.

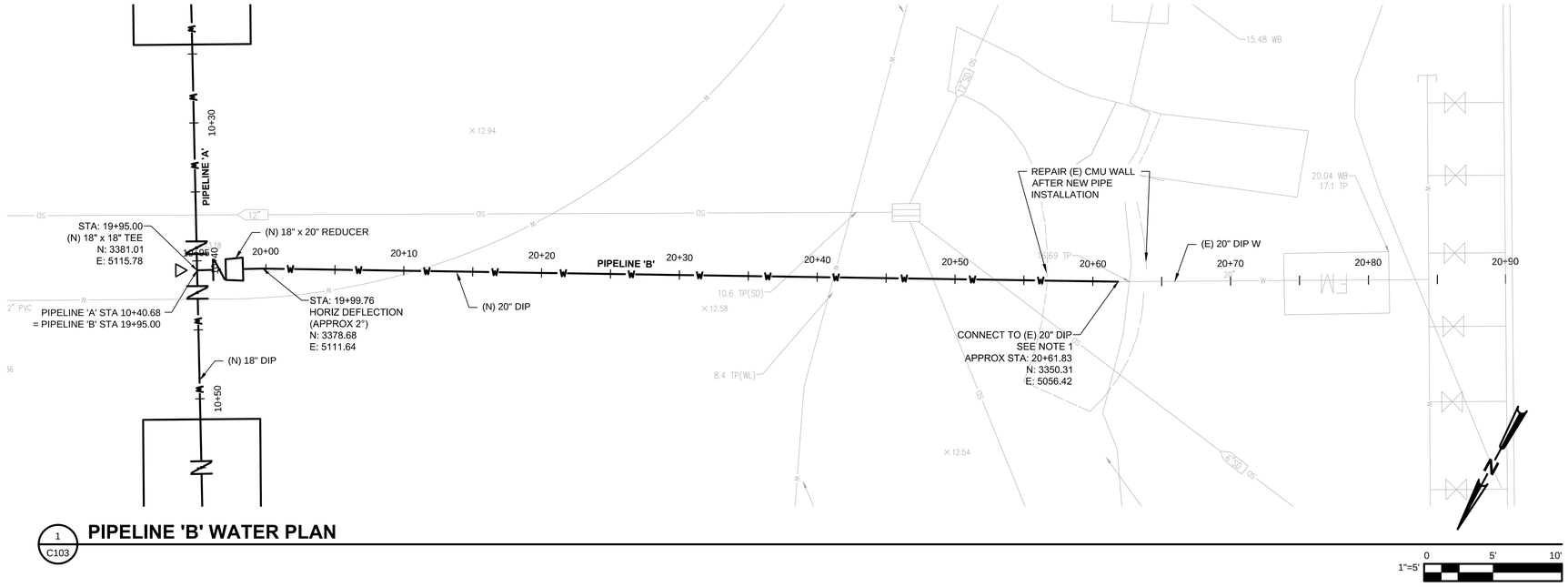

1 C103 **PIPELINE 'B' WATER PLAN**

1"=5' 0 5' 10'

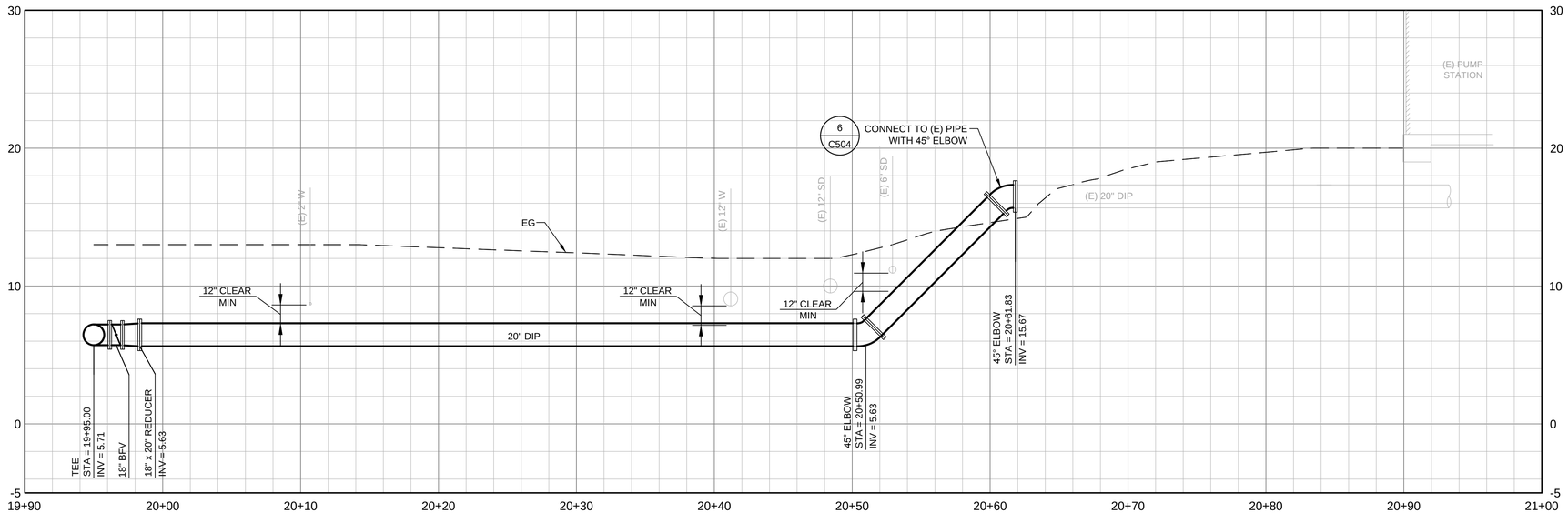

2 C103 **PIPELINE 'B' WATER PROFILE**

1"=5' 0 5' 10'

GHD Inc.
1735 North First Street Suite 301 San Jose California 95112 USA
T 1 408 451 9615 F 1 408 451 9665
W www.ghd.com

6/27/14

DATE	REVISION	BY

CITY OF SANTA CLARA
WATER & SEWER UTILITIES

NORTHSIDE TANKS SITE IMPROVEMENTS PROJECT
WATER PLAN AND PROFILE 2

APPROVED DATE
DIRECTOR OF WATER & SEWER UTILITIES

PROJ. NO.	592-1423-80300-7054-(I)30148		
DESIGNED BY	NK	DRAWN BY	CF
CHECKED BY	AC	YEAR	2014
DATE	JULY 2014	BLK. BK. PG.	94
DRAWING NO.	C103	SHT. 7	OF 49
HORIZ.	NOTED	VERT. –	DWG. NO. W-3143-4

Plot Date: 24 June 2014 - 12:10 AM Plotted by: Ming Yee Cad File No: G:\11205 City of Santa Clara\8410306 Northside Tanks Piping Reconfig\06-CAD\Sheets\8410306 C103.dwg

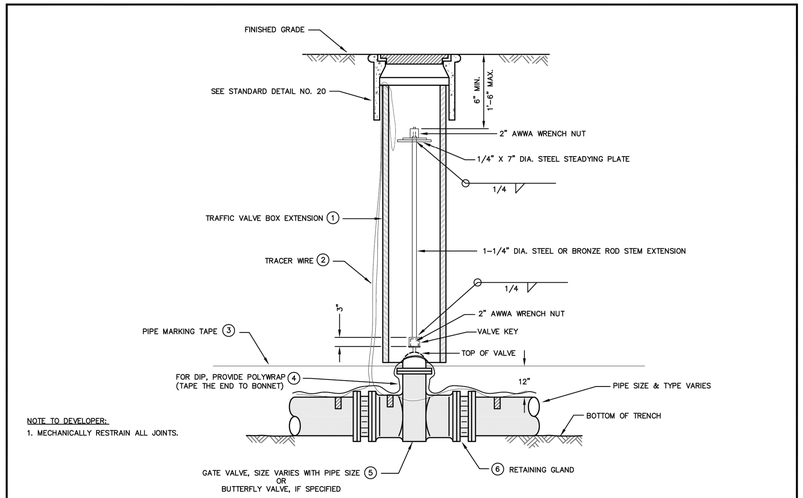

Drawn By:	D. LUU
Checked By:	L. AU
Approved By:	R. WILSON, R. ENOS
Revised Date:	MARCH 2011

Signature:

Director of
Water and Sewer Utilities

CITY OF SANTA CLARA
WATER DEPT. - STANDARD NO. **19**

GATE VALVE INSTALLATION

City of Santa Clara – Water & Sewer Utilities Department
Standard No. 19 – Gate Valve Installation – Material List
Use no lead products for domestic water services.
Domestic Products Only. Use 316 stainless steel bolts, nuts, and washers for all bolted connections.

Material	Description	Manufacturer	Model
1. Traffic Valve Box & Extension (see Standard Detail No. 20 for valve box installation)	Traffic valve box with lid. For potable water, lid shall be marked "WATER". For recycled water, provide purple lid marked "CSC-RW".	Christy	G5
	Extension - 8" PVC SDR 35, single piece cut to proper length.		
2. Trace Wire	RHW #12 AWG solid with 12" minimum slack inside all valve boxes.		
3. Pipe Marking Tape	For potable water, use blue. For recycled water, use purple. 3" wide, 4 mil, non-detectable.		
4. Polywrap (for DIP)	For potable water, use blue. For recycled water, use purple. 8 mil low density or 4 mil high density polyethylene film installed per AWWA C105. Tape the end to bonnet.		
5. Gate Valve	End connections as required or specified - size as specified. AWWA C-509 resilient seat, epoxy coated inside and out to meet AWWA C-550. Open left with 2" square operating nut. All rubber components shall be EPDM.	M&H	Style 4067
		Mueller	A-2361
		Clow	F-6106
Butterfly Valve	End connections as required or specified - size as specified. AWWA C-504 resilient seat, epoxy coated inside and out to meet AWWA C-550. Open left with 2" square operating nut. All rubber components shall be EPDM.	Pratt	Groundhog series
		Mueller	Lineseal III
6. Retaining Gland	Joint restraint for use with mechanical joint fittings. Size as specified.	US Pipe	MJ Field Lok
		EBAA	Megalug Series 1100
		Uniflange	Series 1400 (DIP) Series 1500 (PVC)

1
--
GATE VALVE INSTALLATION
NTS

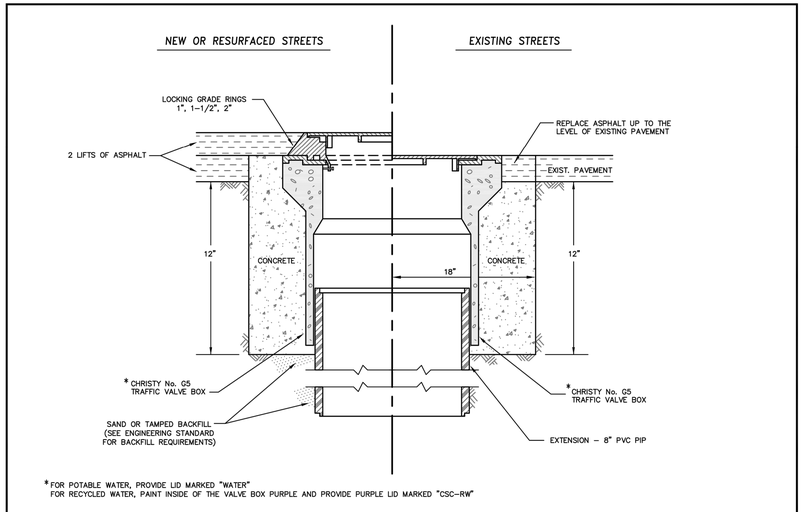

Drawn By:	D. LUU
Checked By:	L. AU
Approved By:	R. WILSON, R. ENOS
Revised Date:	MARCH 2011

Signature:

Director of
Water and Sewer Utilities

CITY OF SANTA CLARA
WATER DEPT. - STANDARD NO. **20**

TRAFFIC VALVE BOX

2
--
TRAFFIC VALVE BOX
NTS

NOTES:

1. USE PUBLIC WORKS DEPT. STANDARD DRAWING ST-19 FOR TRENCH BACKFILL AND PAVEMENT REPLACEMENT. FOR PAVED SURFACE, USE ONLY OPTION A.
2. FOR UNPAVED SURFACE, CONTRACTOR CAN PROPOSE SUITABLE NATIVE BACKFILL MATERIAL.
3. FOR PCC SURFACE, REPLACE PCC TO MATCH EXISTING. INSTALL DOWELS PER ENGINEERING DEPT. STANDARD DRAWING ST-12 AND ST-13. REPLACE PCC PER CALTRANS STANDARD SPECS SECTION 90, CLASS 2. USE ONLY PORTLAND CEMENT, NO FLY ASH.

SAND SPEC:

SAND SHALL BE CLEAN AND FREE FROM CLAY AND ORGANICS. IT SHALL BE A CLEAN, HARD, DURABLE MATERIAL RESULTING FROM NATURAL DISINTEGRATION AND ABRASION OF GRANITE, QUARTZ, OR SIMILAR HARD ROCK OR BY THE PROCESSING OF COMPLETELY FRIABLE SANDSTONE. IT SHALL HAVE A SAND EQUIVALENT VALUE OF NOT LESS THAN 35. THE PERCENTAGE COMPOSITION BY WEIGHT AS DETERMINED BY LABORATORY SIEVES SHALL CONFORM TO THE FOLLOWING GRADING LIMITS:

SIEVE SIZE	% PASSING
# 4	100
# 10	95 – 100
# 40	20 – 65
# 100	5 – 30
# 200	0 – 10

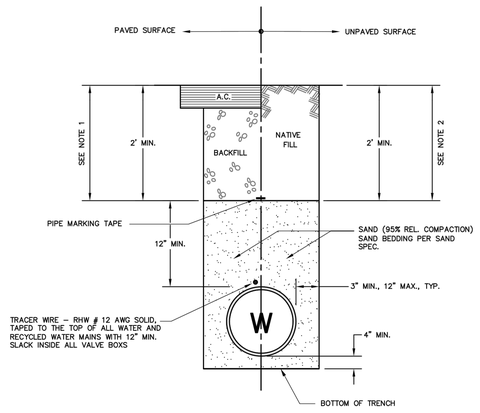

Drawn By:	D. LUU
Checked By:	L. AU
Approved By:	R. WILSON, R. ENOS
Revised Date:	MARCH 2011

Signature:

Director of
Water and Sewer Utilities

CITY OF SANTA CLARA
WATER DEPT. - STANDARD NO. **23**

TRENCH BACKFILL

3
--
TRENCH BACKFILL
NTS

6/27/14

GHD Inc.
1735 North First Street Suite 301 San Jose California 95112 USA
T 1 408 451 9615 F 1 408 451 9665
W www.ghd.com

DATE	REVISION	BY

CITY OF SANTA CLARA
WATER & SEWER UTILITIES

NORTHSIDE TANKS SITE IMPROVEMENTS PROJECT
STANDARD WATER DETAILS 1

APPROVED DATE
DIRECTOR OF WATER & SEWER UTILITIES

PROJ. NO.	592-1423-80300-7054-(I)30148		
DESIGNED BY	NK	DRAWN BY	CF
CHECKED BY	AC	YEAR	2014
DATE	JULY 2014	BLK. BK. PG.	94
DRAWING NO.	C501	SHT. 8	OF 49
HORIZ.	NOTED	VERT. –	DWG. NO. W-3143-4

Plot Date: 24 June 2014 - 12:11 AM Plotted by: Ming Yee Cad File No: G:\11205 City of Santa Clara\8410306 Northside Tanks Piping Reconfig\06-CAD\Sheets\8410306 C501.dwg

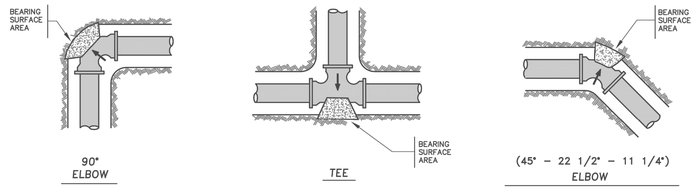

MIN. BEARING SURFACE AREA (sq. ft. of undisturbed earth) [2,3]

PIPE SIZE	TEE[3], PLUG OR DEAD END	90° ELBOW	45° ELBOW	22 1/2° ELBOW	11 1/4° ELBOW
2"	1/2	1/2	1/2	1/2	1/2
4"	1	1–1/2	1	1/2	1/2
6"	2	3	2	1	1
8"	4	5	3	1–1/2	1
10"	6	8	5	3	2
12"	8	12	6	3	3

NOTES:
1. BRANCH OUTLET SIZE.
2. AREAS BASED ON 150 PSI. WATER PRESSURE AND 2000 PSF. ALLOWABLE SOIL BEARING CAPACITY.
3. FOR SOFT OR DAMP CLAY, DOUBLE THE MIN. BEARING SURFACE AREA.
4. PORTLAND CEMENT SHALL BE – 6 SACK – 2" SLUMP – 3/4" ROCK.

Drawn By:	D. LUU
Checked By:	L. AU
Approved By:	R. WILSON, R. ENOS
Revised Date:	MARCH 2011

Signature: Director of Water and Sewer Utilities

CITY OF SANTA CLARA
WATER DEPT. - STANDARD NO. 21

THRUST BLOCKING

1 -- THRUST BLOCKING
NTS

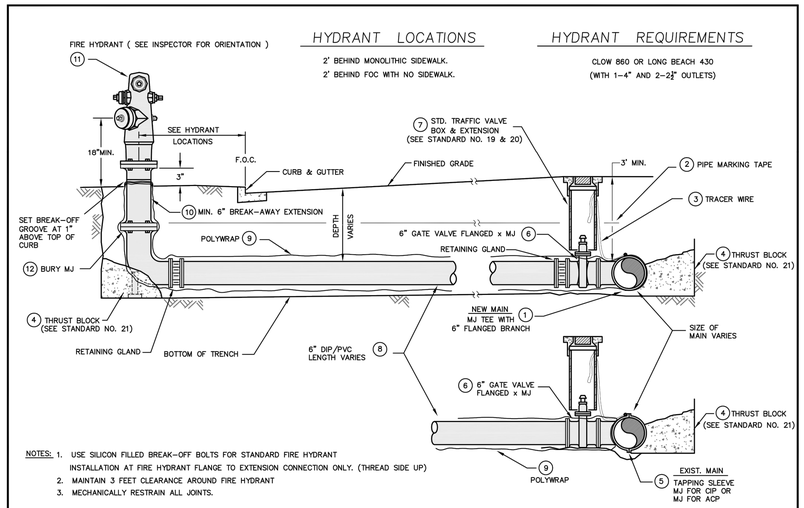

NOTES:
1. USE SILICON FILLED BREAK–OFF BOLTS FOR STANDARD FIRE HYDRANT INSTALLATION AT FIRE HYDRANT FLANGE TO EXTENSION CONNECTION ONLY. (THREAD SIDE UP)
2. MAINTAIN 3 FEET CLEARANCE AROUND FIRE HYDRANT
3. MECHANICALLY RESTRAIN ALL JOINTS.

Drawn By:	D. LUU
Checked By:	L. AU
Approved By:	R. WILSON, R. ENOS
Revised Date:	MARCH 2011

Signature: Director of Water and Sewer Utilities

CITY OF SANTA CLARA
WATER DEPT. - STANDARD NO. 18

FIRE HYDRANT ASSEMBLY

I:\Water\CAD\AutoCad Drawings\Standard Detail\STD-Detail (2011 Rev.)\STD-Detail-2011-CAD\STD-18-2011rev-2012-07.dwg – STD Detail (2005 Rev).ctb 7/13/2012

2 -- FIRE HYDRANT ASSEMBLY
NTS

City of Santa Clara – Water & Sewer Utilities Department
Standard No. 18 – Fire Hydrant Assembly – Material List
Domestic Products Only.
Use 316 stainless steel bolts, nuts, and washers for all bolted connection, except for break-away bolts.

Material	Description	Manufacturer	Model
1. Tee	Mechanical joint with flanged branch. AWWA C-153 compact ductile iron with mechanical joint, cement lined with stainless steel bolts and gaskets	US Pipe	
		Tyler Union	
2. Pipe Marking Tape	Blue. 3" wide, 4 mil, non-detectable.		
3. Tracer Wire	RHW#12 AWG Solid. Taped to the top of the water main with 12" minimum slack inside all valve boxes		
4. Thrust Block	See City Standard No. 21		
5. Tapping Sleeve	Mechanical joint with all accessories.		
	-Ductile iron, cast iron, or PVC	Mueller H-615 Clow F-5205	
	-AC pipe	Mueller H-619 Clow F-5207	
6. Gate Valve	MJ x Flanged. AWWA C-509 resilient seat, epoxy coat inside and out to meet AWWA C-550. Open left with 2" square operating nut. All rubber components shall be EPDM.	M&H	Style 4067
		Mueller	A-2361
		Clow	F-6106
7. Traffic Valve Box & Extension (see Standard Detail Nos. 19 & 20)	Valve Box	Christy	G5 with lid marked "WATER"
	Extension - 8" PVC SDR 35, single piece cut to proper length.		
8. Pipe mechanically restrain all joints	Size and type as specified.		
	-Ductile iron, cement lined Class 50. Protect with polywrap for underground pipe.	US Pipe Pacific States	
	-PVC. C900. DR-14.	JM Eagle Certainteed	
9. Polywrap	To be used for DIP. Blue. 8 mil low density or 4 mil high density polyethylene film installed per AWWA C105. Tape ends to pipe with 10 mil tape.		
10. Break-Away Extension	Minimum 6" with breakaway groove. Imports are acceptable.		
11. Fire Hydrant	With 1-4" and 2-2-1/2" outlets. All with cast iron caps (City No. 76) Coat hydrant with Dunn-Edwards paint #10-L-1, Gloss White Enamel, Syn-Lustro GL L Base	Clow	860
		Long Beach	430
12. Bury MJ	Mechanical joint inlet x hydrant flange outlet. 6" x appropriate height. Imports are acceptable.	Clow	
		Rich	

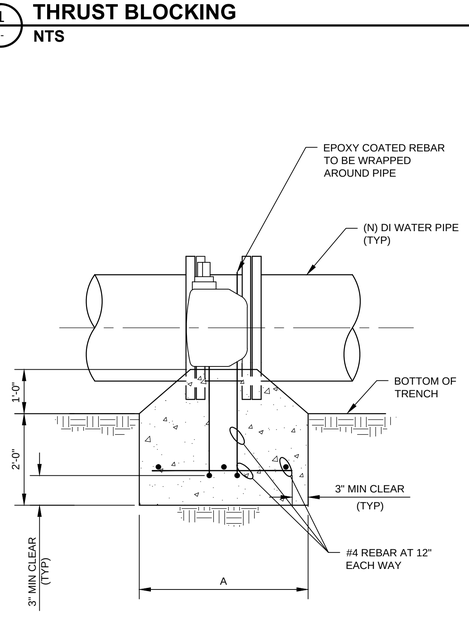

NOTES

1. PROVIDE ANCHOR BLOCKS FOR VALVES 18" AND LARGER.
2. COAT VALVE AND MISCELLANEOUS FERROUS METAL PRIOR TO PLACEMENT IN TRENCH IN ACCORDANCE WITH SPECIFICATIONS.
3. AFTER PAVING, RAISE VALVE BOX TO PERMANENT GRADE, CAST CONCRETE COLLAR AND REPAIR PAVEMENT PER CITY STANDARDS.

DIM.	VALVE SIZE 18"	20"
A	2'	2'
B	5'	5'

3 -- VALVE ANCHOR BLOCK
NTS

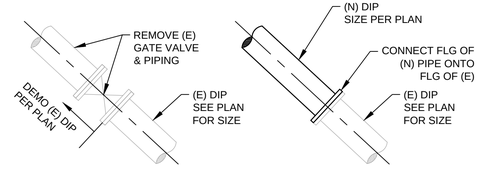

DEMO PLAN PLAN

4 -- PIPING RECONFIGURATION
NTS

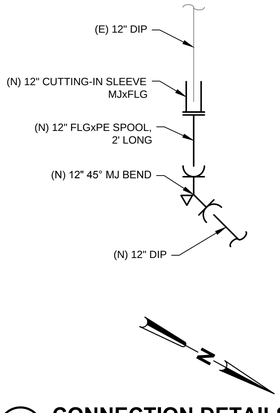

5 -- CONNECTION DETAILS
C101 NTS

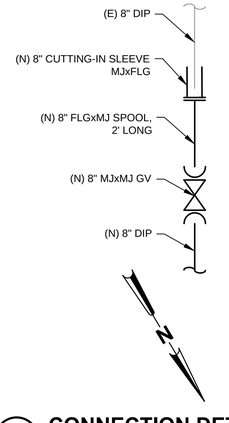

6 -- CONNECTION DETAILS
C101 NTS

GHD Inc.
1735 North First Street Suite 301 San Jose California 95112 USA
T 1 408 451 9615 F 1 408 451 9665
W www.ghd.com

6/27/14

DATE	REVISION	BY

APPROVED DATE
DIRECTOR OF WATER & SEWER UTILITIES

CITY OF SANTA CLARA
WATER & SEWER UTILITIES
NORTHSIDE TANKS SITE IMPROVEMENTS PROJECT
STANDARD WATER DETAILS 2

PROJ. NO.	592-1423-80300-7054-(I)30148		
DESIGNED BY	NK	DRAWN BY	CF
CHECKED BY	AC	YEAR	2014
DATE	JULY 2014	BLK. BK. PG.	94
DRAWING NO.	C-502	SHT. 9	OF 49
HORIZ.	NOTED	VERT. –	DWG. NO. W-3143-4

Plot Date: 24 June 2014 - 12:11 AM Plotted by: Ming Yee Cad File No: G:\11205 City of Santa Clara\8410306 Northside Tanks Piping Reconfig\06-CAD\Sheets\8410306 C502.dwg

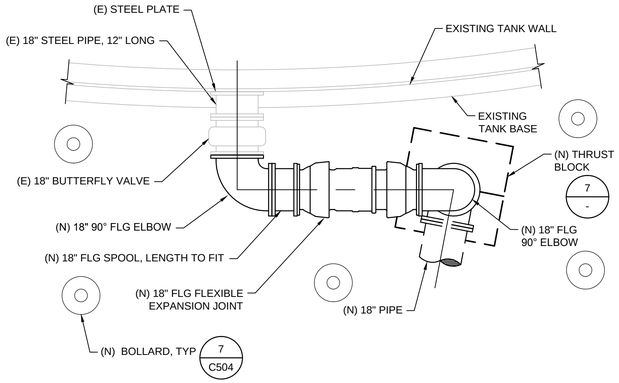

1 -- FLEXIBLE EXPANSION JOINT (AT TANK 1) PLAN
NTS

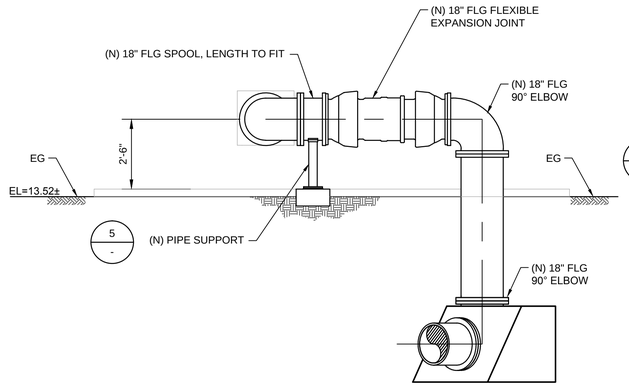

2 -- FLEXIBLE EXPANSION JOINT (AT TANK 1) ELEVATION
NTS

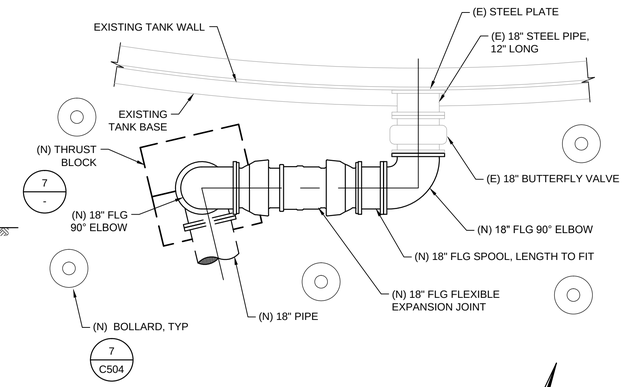

3 -- FLEXIBLE EXPANSION JOINT (AT TANK 2) PLAN
NTS

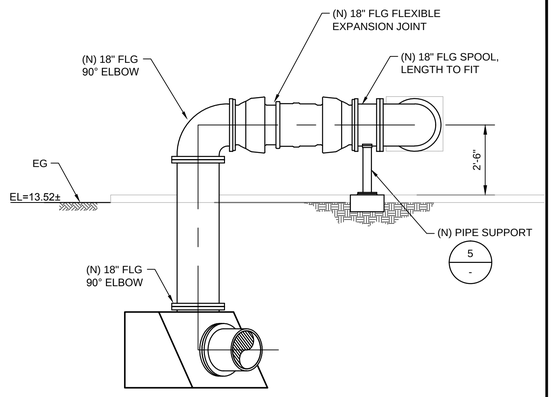

4 -- FLEXIBLE EXPANSION JOINT (AT TANK 2) ELEVATION
NTS

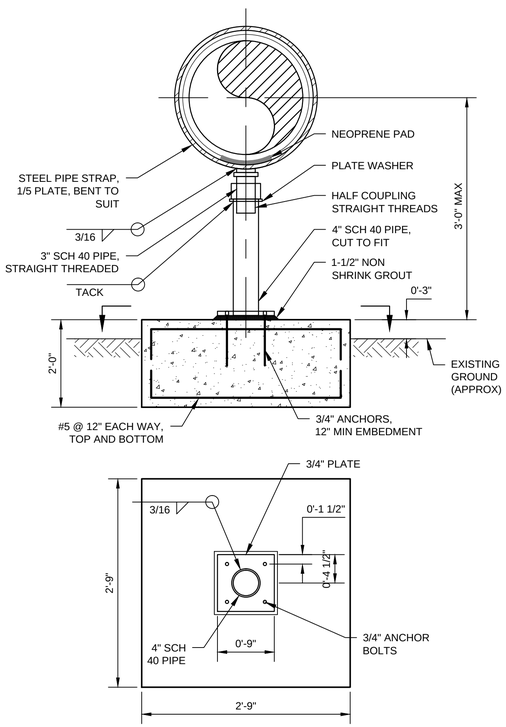

5 -- PIPE SUPPORT - 1
NTS

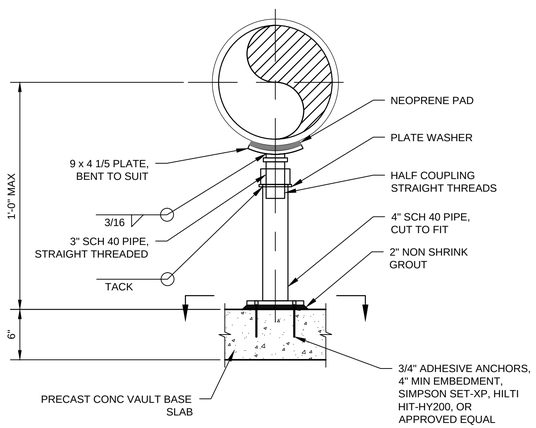

6 -- PIPE SUPPORT - 2
NTS

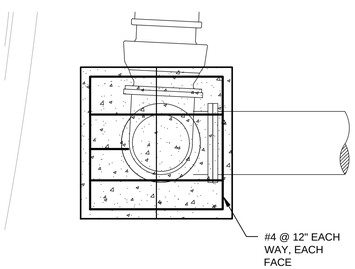

7 -- THRUST BLOCK
NTS

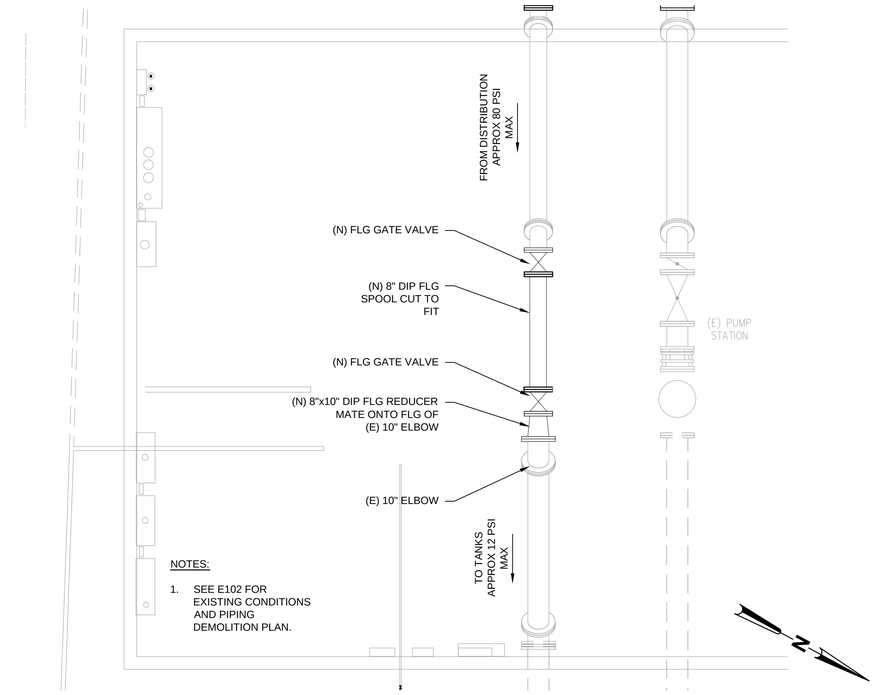

8 -- PUMP STATION BUILDING INTERIOR PIPING
SCALE: 1" = 3'

1"=3' 0 3' 6'

GHD Inc.
1735 North First Street Suite 301 San Jose California 95112 USA
T 1 408 451 9615 F 1 408 451 9665
W www.ghd.com

6/27/14

DATE	REVISION	BY

CITY OF SANTA CLARA
WATER & SEWER UTILITIES

NORTHSIDE TANKS SITE IMPROVEMENTS PROJECT
WATER DETAILS 1

APPROVED DATE
DIRECTOR OF WATER & SEWER UTILITIES

PROJ. NO.	592-1423-80300-7054-(I)30148		
DESIGNED BY	NK	DRAWN BY	CF
CHECKED BY	AC	YEAR	2014
DATE	JULY 2014	BLK. BK. PG.	94
DRAWING NO.	C503	SHT. 10	OF 49
HORIZ.	NOTED	VERT. –	DWG. NO. W-3143-4

Plot Date: 24 June 2014 - 12:12 AM Plotted by: Ming Yee Cad File No: G:\11205 City of Santa Clara\8410306 Northside Tanks Piping Reconfig\06-CAD\Sheets\8410306 C503.dwg

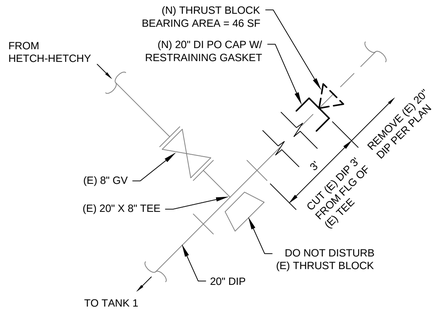

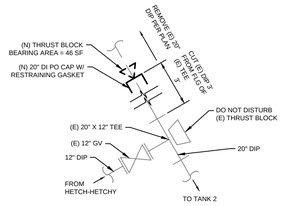

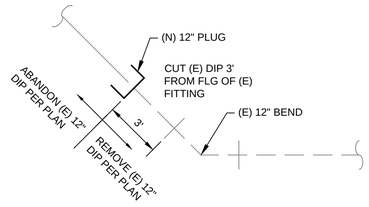

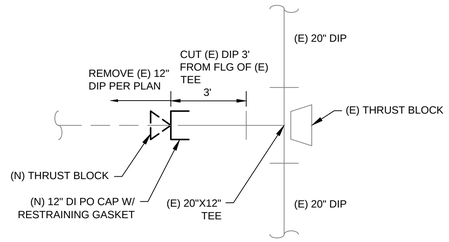

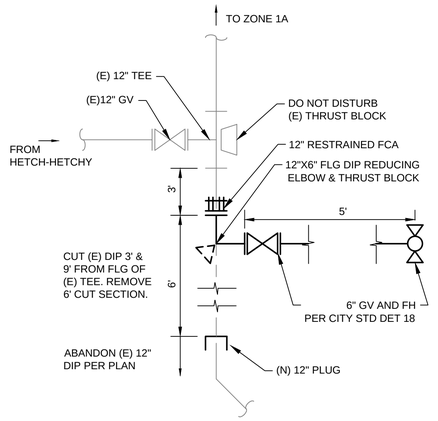

1 C100 **CUT & CAP DETAIL - 1**
NTS

2 C100 **CUT & CAP DETAIL - 2**
NTS

3 C100 **CUT & CAP DETAIL - 3**
NTS

4 C100 **CUT & CAP DETAIL - 4**
NTS

5 C100 **CUT & CAP DETAIL - 5**
NTS

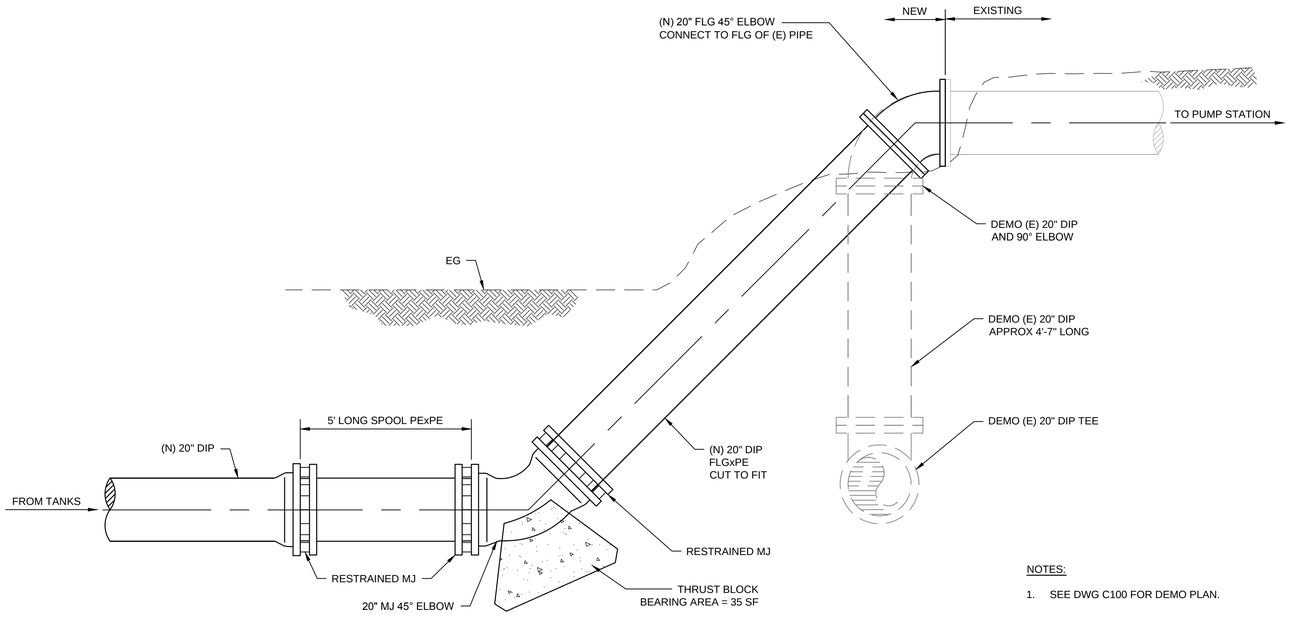

NOTES:

1. SEE DWG C100 FOR DEMO PLAN.

6 C103 **CONNECTION - STA 20+33.99**
NTS

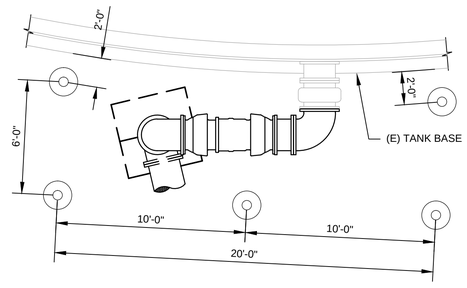

PLAN

NOTES:

1. TYPICAL FOR BOTH TANK CONNECTIONS.

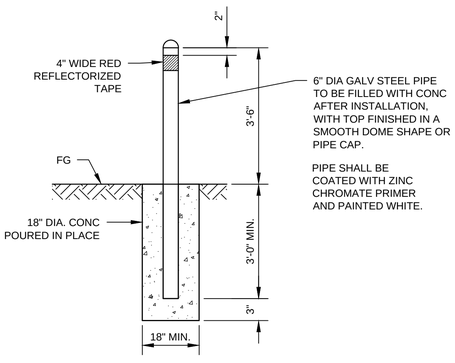

7 -- **BOLLARD DETAIL**
NTS

6/27/14

GHD Inc.
1735 North First Street Suite 301 San Jose California 95112 USA
T 1 408 451 9615 F 1 408 451 9665
W www.ghd.com

DATE	REVISION	BY

CITY OF SANTA CLARA
WATER & SEWER UTILITIES

NORTHSIDE TANKS SITE IMPROVEMENTS PROJECT
STANDARD DETAILS 2

APPROVED DATE

DIRECTOR OF WATER & SEWER UTILITIES

PROJ. NO.	592-1423-80300-7054-(I)30148		
DESIGNED BY	NK	DRAWN BY	CF
CHECKED BY	AC	YEAR	2014
DATE	JULY 2014	BLK. BK. PG.	94
DRAWING NO.	C504	SHT. 11	OF 49
HORIZ.	NOTED	VERT. –	DWG. NO. W-3143-4

Plot Date: 24 June 2014 - 12:12 AM Plotted by: Ming Yee Cad File No: G:\11205 City of Santa Clara\8410306 Northside Tanks Piping Reconfig\06-CAD\Sheets\8410306 C504.dwg

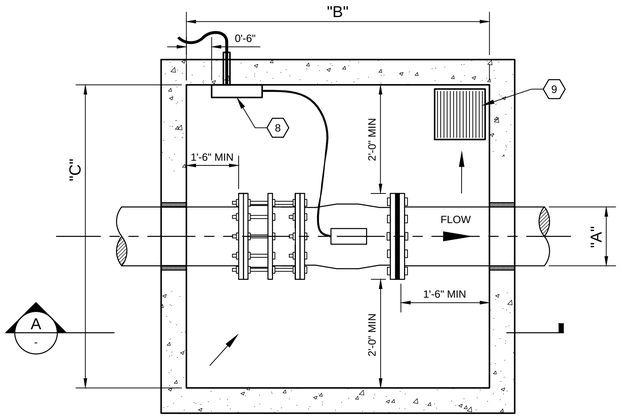

PLAN

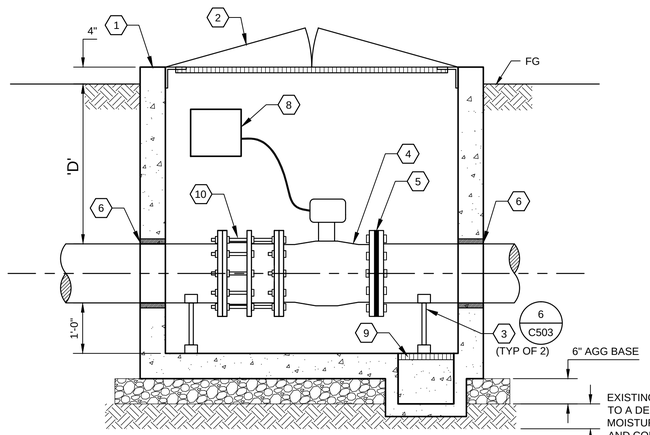

SECTION A

DIMENSIONS		
	VAULT A	VAULT B
"A"	8" DIA	12" DIA
"B"	5'-0"	5'-0"
"C"	5'-0"	6'-0"
"D"	4'-6" APPROX	2'-0" APPROX

NOTES:

1. CENTER THE PIPE AND FLOWMETER WITHIN THE VAULT.
2. THE MINIMUM STRAIGHT PIPE DISTANCE FROM THE FLOW METER ELEMENT TO THE NEAREST UPSTREAM BEND, VALVE, OR FITTING IS 5 x D (NOMINAL PIPE DIAMETER).
3. THE MINIMUM STRAIGHT PIPE DISTANCE FROM THE FLOW METER ELEMENT TO THE NEAREST DOWNSTREAM BEND, VALVE, OR FITTING IS 2 x D (NOMINAL PIPE DIAMETER).
4. SEE SPECIFICATION SECTION 03480 PRECAST CONCRETE UTILITY VAULTS.
5. SLOPE VAULT FLOOR TO DRAIN TOWARDS SUMP.

PARTS LIST	
NUMBER	DESCRIPTION
1	PRECAST CONCRETE VAULT
2	ACCESS HATCH
3	PIPE SUPPORT
4	MAGMETER FLOW ELEMENT
5	INSULATING JOINT
6	PIPE PENETRATION
7	NOT USED
8	MAGMETER TRANSMITTER AND ELECTRICAL JUNCTION BOX
9	SUMP 12" x 12" x 12" DEEP, AND FRP GRATE
10	DISMANTLING JOINT

1 FLOWMETER VAULT
NTS

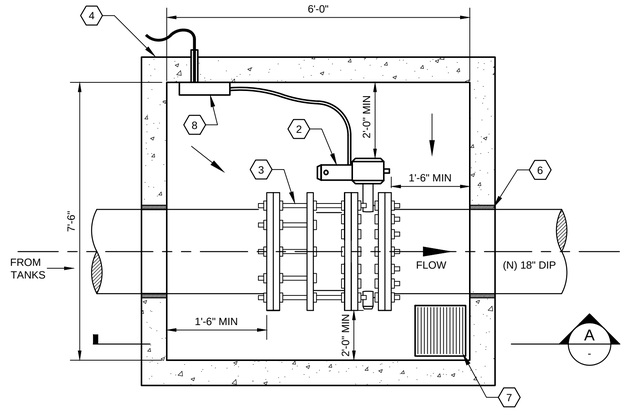

PLAN

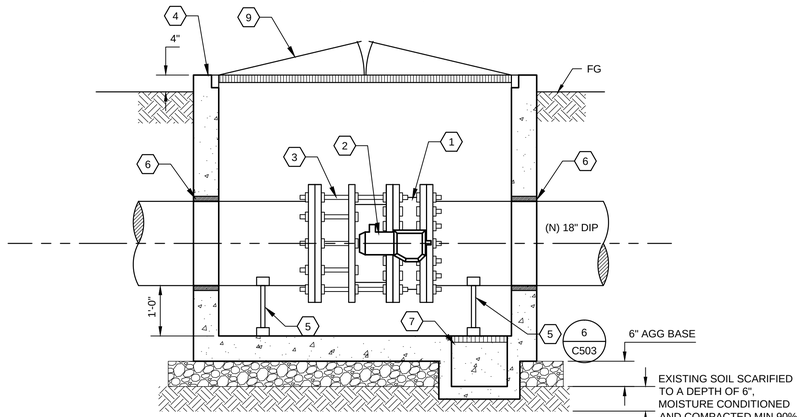

SECTION A

NOTES:

1. ORIENTATION FOR TANK 2 VALVE VAULT IS MIRRORED FROM THE LAYOUT SHOWN IN THIS DETAIL.
2. SEE SPECIFICATION SECTION 03480 PRECAST CONCRETE UTILITY VAULTS.
3. SLOPE VAULT FLOOR TO DRAIN TOWARDS SUMP.

PARTS LIST	
NUMBER	DESCRIPTION
1	18" BUTTERFLY VALVE
2	ELECTRIC MOTOR ACTUATOR
3	DISMANTLING JOINT
4	PRECAST CONCRETE VAULT
5	PIPE SUPPORT
6	PIPE PENETRATION
7	SUMP 12" x 12" x 12" DEEP, AND FRP GRATE
8	ELECTRICAL JUNCTION BOX
9	ALUMINUM ACCESS HATCH

2 VALVE VAULT
NTS

6/27/14

GHD Inc.
1735 North First Street Suite 301 San Jose California 95112 USA
T 1 408 451 9615 F 1 408 451 9665
W www.ghd.com

DATE	REVISION	BY

CITY OF SANTA CLARA
WATER & SEWER UTILITIES

NORTHSIDE TANKS SITE IMPROVEMENTS PROJECT
FLOWMETER AND TURBIDIMETER VAULTS

APPROVED DATE
DIRECTOR OF WATER & SEWER UTILITIES

PROJ. NO.	592-1423-80300-7054-(I)30148		
DESIGNED BY	NK	DRAWN BY	CF
CHECKED BY	AC	YEAR	2014
DATE	JULY 2014	BLK. BK. PG.	94
DRAWING NO.	C505	SHT. 12	OF 49
HORIZ.	NOTED	VERT. –	DWG. NO. W-3143-4

Plot Date: 24 June 2014 - 12:24 AM Plotted by: Ming Yee Cad File No: G:\11205 City of Santa Clara\8410306 Northside Tanks Piping Reconfig\06-CAD\Sheets\8410306 C505.dwg

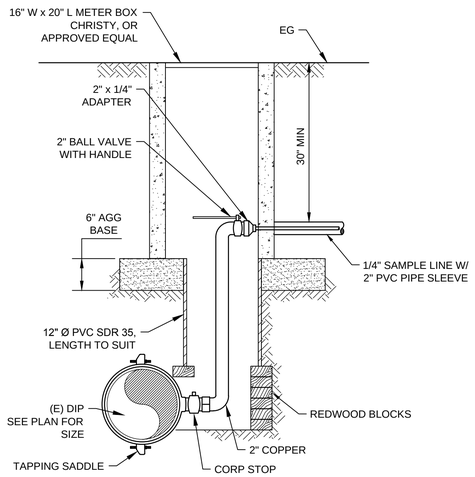

1 C101 INSTRUMENTATION TAP
NTS

2 C101 EXISTING TURBIDIMETER TAP AT METER VAULT
NTS

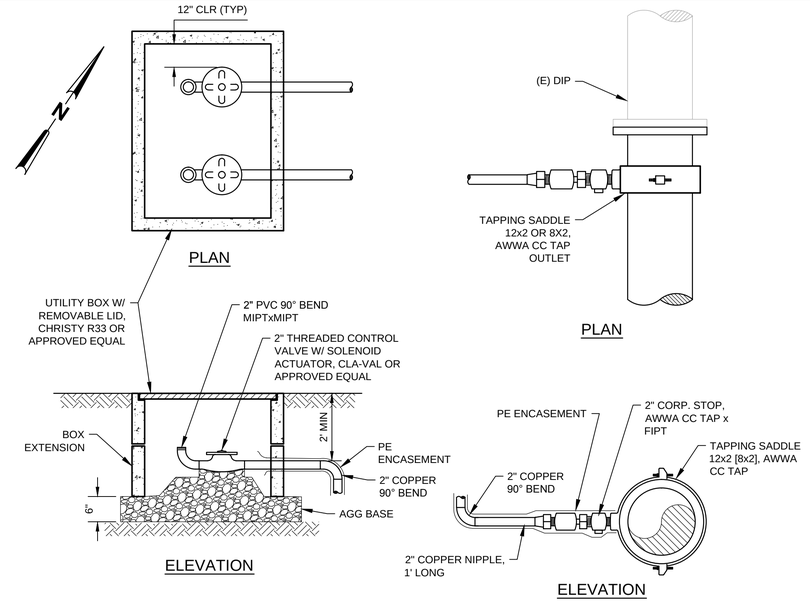

3 C101 2" FLUSH VALVE BOX
NTS

4 -- 2" FLUSH VALVE TAP
NTS

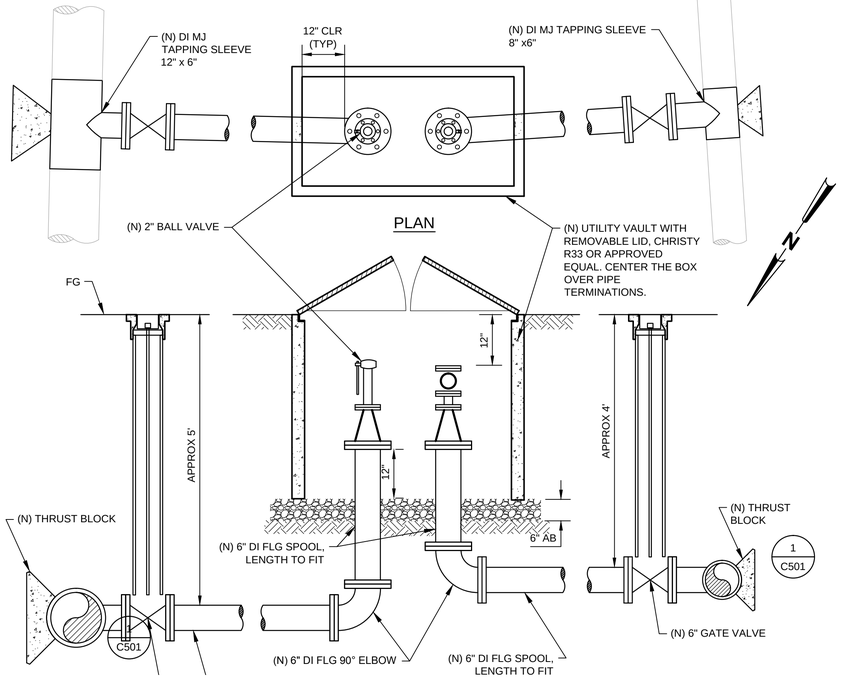

5 C101 6" FLUSH VALVE
NTS

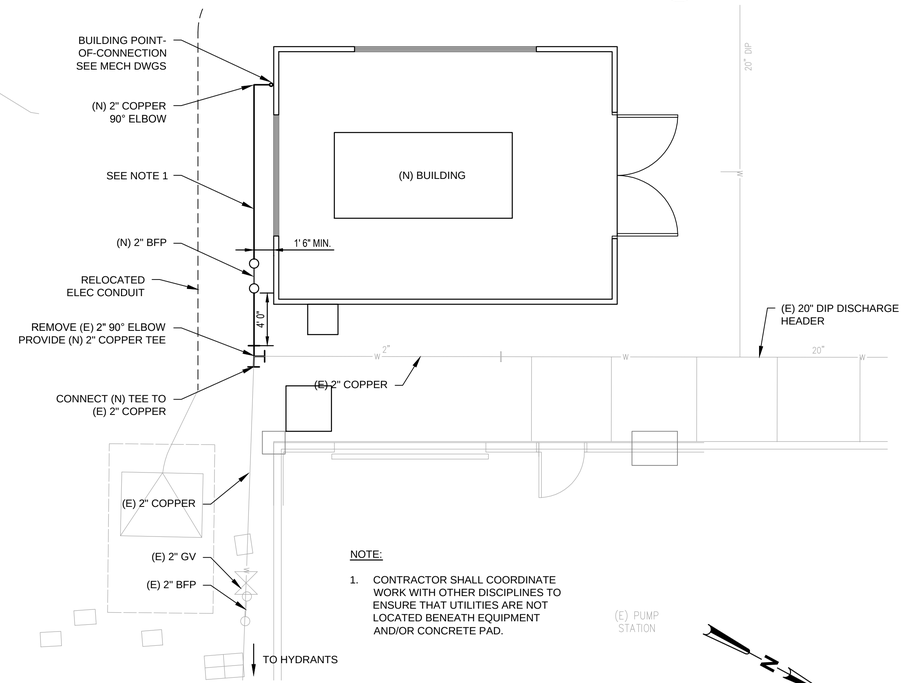

6 C101 PUMP STATION WATER SERVICE
NTS

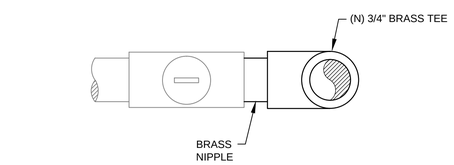

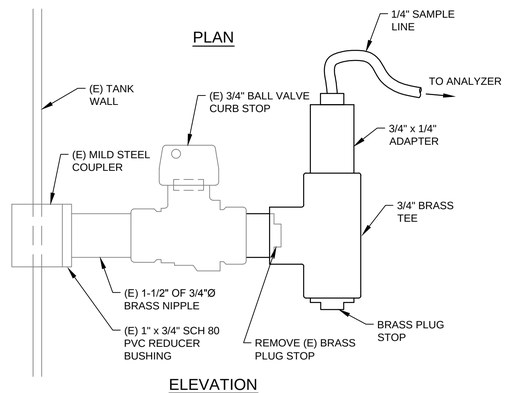

7 C101 SAMPLING PORT CONNECTION
NTS

6/27/14

GHD Inc.
1735 North First Street Suite 301 San Jose California 95112 USA
T 1 408 451 9615 F 1 408 451 9665
W www.ghd.com

DATE	REVISION	BY

CITY OF SANTA CLARA
WATER & SEWER UTILITIES

NORTHSIDE TANKS SITE IMPROVEMENTS PROJECT
WATER DETAILS 3

APPROVED DATE
DIRECTOR OF WATER & SEWER UTILITIES

PROJ. NO.	592-1423-80300-7054-(I)30148		
DESIGNED BY	NK	DRAWN BY	CF
CHECKED BY	AC	YEAR	2014
DATE	JULY 2014	BLK. BK. PG.	94
DRAWING NO.	C506	SHT. 13	OF 49
HORIZ.	NOTED	VERT.	-
		DWG. NO.	W-3143-4

Plot Date: 24 June 2014 - 12:25 AM Plotted by: Ming Yee Cad File No: G:\11205 City of Santa Clara\8410306 Northside Tanks Piping Reconfig\06-CAD\Sheets\8410306 C506.dwg

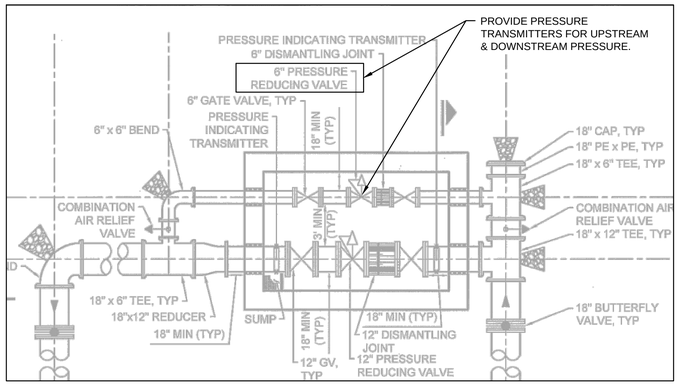

NOTES:

1. CHECK AVAILABILITY OF PRV SAMPLE PORTS BEFORE ORDERING MATERIALS.
2. CONNECT PRESSURE SAMPLE LINES TO (E) PRV PORTS. MOUNT REMOTE TRANSMITTERS ON ADJACENT WALL. PRESSURE TRANSMITTER WORK SHALL BE PER DETAIL 2 OF THIS SHEET.
3. EXISTING 6" PRV IS CLA-VAL 90G-01BCDSYKCP1P2 W/ X105LCW LIMIT SWITCH ASSEMBLY.

1 C101 PRV PRESSURE INSTRUMENTATION - 1

NTS

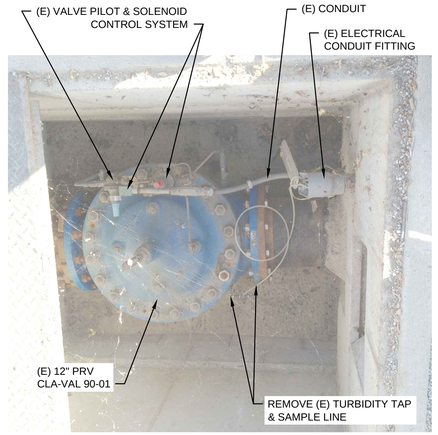

DEMOLITION PLAN

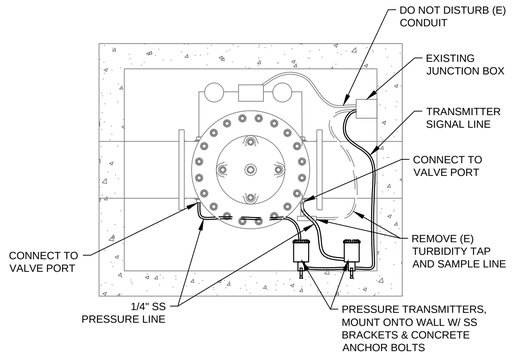

PLAN

2 C101 PRV PRESSURE INSTRUMENTATION - 2

NTS

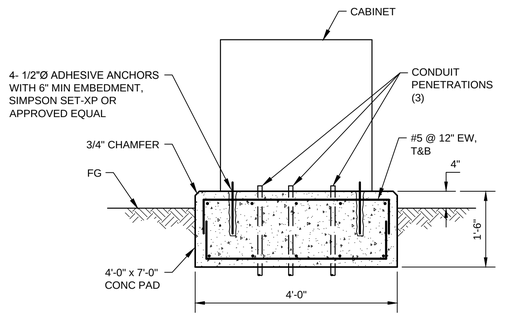

NOTES

1. CABINET SHALL BE 63" W x 63" H x 18" DEEP INSIDE DIMENSIONS MIN., NEMA 4X, PAINTED WHITE, HOFFMAN WATERSHED SERIES OR APPROVED EQUAL.
2. SEE E-XXX FOR INTERIOR LAYOUT OF CABINET.

3 -- INSTRUMENTATION CABINET

NTS

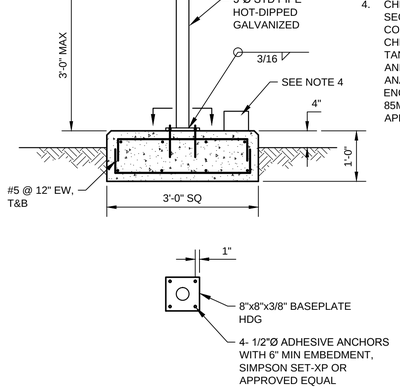

NOTES

1. ENCLOSURE SHALL BE 24" W x 36" H x 13" DEEP INSIDE DIMENSIONS MIN., NEMA 4X, PAINTED WHITE, HOFFMAN OR APPROVED EQUAL.
2. SEE E-XXX FOR INTERIOR LAYOUT OF ENCLOSURE.
3. MOUNT ENCLOSURE ONTO 3"Ø PIPE WITH STAINLESS STEEL HARDWARE.
4. CHEMICAL FEED PUMP. SECURE PUMP TO TOP OF CONCRETE. PROVIDE CHLORINE SAMPLE LINE FROM TANK SAMPLE PORT TO PUMP, AND FROM PUMP TO ANALYZER INSIDE ENCLOSURE. STENNER 85MHP40-ADJUSTABLE, OR APPROVED EQUAL.

4 -- CHLORINE ANALYZER ENCLOSURE

NTS

6/27/14

GHD Inc.
1735 North First Street Suite 301 San Jose California 95112 USA
T 1 408 451 9615 F 1 408 451 9665
W www.ghd.com

DATE	REVISION	BY

CITY OF SANTA CLARA
WATER & SEWER UTILITIES

NORTHSIDE TANKS SITE IMPROVEMENTS PROJECT
WATER DETAILS 4

APPROVED DATE
DIRECTOR OF WATER & SEWER UTILITIES

PROJ. NO.	592-1423-80300-7054-(I)30148		
DESIGNED BY	NK	DRAWN BY	CF
CHECKED BY	AC	YEAR	2014
DATE	JULY 2014	BLK. BK. PG.	94
DRAWING NO.	C507	SHT. 14	OF 49
HORIZ.	NOTED	VERT. –	DWG. NO. W-3143-4

Plot Date: 24 June 2014 - 12:13 AM Plotted by: Ming Yee Cad File No: G:\11205 City of Santa Clara\8410306 Northside Tanks Piping Reconfig\06-CAD\Sheets\8410306 C507.dwg

ARCHITECTURAL ABBREVIATIONS

AASHTO	AMERICAN ASSOCIATION OF STATE HIGHWAY AND TRANSPORTATION OFFICIALS
AB	ANCHOR BOLT
ABC	AGGREGATE BASE COURSE
ABV	ABOVE
AC	AGGREGATE COURSE
ACI	AMERICAN CONCRETE INSTITUTE
ADD'L	ADDITIONAL
AISC	AMERICAN INSTITUTE OF STEEL CONSTRUCTION
AISI	AMERICAN IRON AND STEEL INSTITUTE
AITC	AMERICAN INSTITUTE OF TIMBER CONSTRUCTION
ALT	ALTERNATE
ALUM	ALUMINUM
ANSI	AMERICAN NATIONAL STANDARDS INSTITUTE
APA	AMERICAN PLYWOOD ASSOCIATION
ARCH	ARCHITECT/ARCHITECTURAL
ASTM	AMERICAN SOCIETY FOR TESTING AND MATERIALS
AWS	AMERICAN WELDING SOCIETY
B	BOTTOM
B/	BOTTOM OF
BB	BOTTOM BARS
BO	BOND
BLDG	BUILDING
BLKG	BLOCKING
BM	BEAM
BN	BOUNDARY NAIL
BRG	BEARING
BS	BOTH SIDES
BTWN	BETWEEN
C	CHANNEL
C/C	CENTER TO CENTER
CANT	CANTILEVER
CAP	CAPACITY
CBC	CALIFORNIA BUILDING CODE
CF	CUBIC FEET
CHKD	CHECKED
CI	CONTRACTOR INSTALLED
CJ	CONTRACTION/CONTROL JOINT
CL	CENTERLINE
CLR	CLEAR
CLG	CEILING
CMU	CONCRETE MASONRY UNIT
COL	COLUMN
CONC	CONCRETE
CONN	CONNECTION
CONSTR	CONSTRUCTION
CONT	CONTINUOUS
COORD	COORDINATE
CRSI	CONCRETE REINFORCING STEEL INSTITUTE
CTR/CTR'D	CENTER/CENTERED
d	PENNY (NAIL SIZE)
DBL	DOUBLE
DEG	DEGREES
DET	DETAIL
DF	DOUGLAS FIR
DIA	DIAMETER
DIAG	DIAGONAL
DIM	DIMENSION
DISCONT	DISCONTINUE
DL	DEAD LOAD
DN	DOWN
Do	DITTO
DP	DEEP
DWG	DRAWING
DWL	DOWEL
(E)	EXISTING
EA	EACH
EF	EACH FACE
EG	FOR EXAMPLE
EL/ELEV	ELEVATION
EMBED	EMBEDMENT
EN	EDGE NAIL
ENGR	ENGINEER
EQ	EQUAL
EQUIP	EQUIPMENT
ETC	ET CETERA
EW	EACH WAY
EWEF	EACH WAY EACH FACE
(E)/EXIST	EXISTING
EXP	EXPANSION
EXT	EXTERIOR
FF	FINISHED FLOOR
FG	FINISHED GRADE
FH	FULL HEIGHT
FIN	FINISH
FL	FLOOR
FLG	FLANGE
FN	FACE NAIL
FND	FOUNDATION
FO	FACE OF
FOM	FACE OF MASONRY
FOW	FACE OF WALL
FRMG	FRAMING
FS	FAR SIDE
FTG	FOOTING
GA	GAUGE
GALV	GALVANIZED
GF	GOVERNMENT FURNISHED
GR	GRADE
GRT	GROUT
GSN	GENERAL STRUCTURAL NOTES
GYP	GYPSUM
HAS	HEADED ANCHOR STUDS
HD	HAND
HEF	HORIZONTAL EACH FACE
HIF	HORIZONTAL INSIDE FACE
HK	HOOK
HM	HOLLOW METAL
HOF	HORIZONTAL OUTSIDE FACE
HORIZ	HORIZONTAL
HP	HIGH POINT
HSS	TUBE STEEL
HT	HEIGHT
ID	INSIDE DIAMETER
IE	THAT IS
INFO	INFORMATION
INT	INTERIOR
INTERMED	INTERMEDIATE
INTERSECT	INTERSECTION
INV	INVERT
IBC	INTERNATIONAL BUILDING CODE
JST	JOIST
JT	JOINT
L	ANGLE
LBS	POUNDS
LG	LONG
LL	LIVE LOAD
LLH	LONG LEG HORIZONTAL
LLV	LONG LEG VERTICAL
LOC	LOCATION
LONGIT/LONGL	LONGITUDINAL
LP	LOW POINT
LT	LEFT
LWR	LOWER
MACH	MACHINE
MAINT	MAINTENANCE
MAS	MASONRY
MAX	MAXIMUM
MB	MACHINE BOLT
MC	CHANNEL
MCJT	MASONRY CONTROL JOINT
MECH	MECHANICAL
MFR	MANUFACTURER
MIN	MINIMUM
MISC	MISCELLANEOUS
MHHW	MEAN HIGHER HIGH WATER
MLLW	MEAN LOWER LOW WATER
MNTG	MOUNTING
MO	MASONRY OPENING
MOD	MODIFIED
MTL	METAL
(N)	NEW
NIC	NOT IN CONTRACT
NO.	NUMBER
NOM	NOMINAL
NS	NEAR SIDE
NTS	NOT TO SCALE
OC	ON CENTER
OD	OUTSIDE DIAMETER
OF	OUTSIDE FACE
OPG	OPENING
OPP	OPPOSITE
PEB	PRE ENGINEERED BUILDING
PEMB	PRE ENGINEERED METAL BLDG
PL	PLATE
PLCS	PLACES
PLYWD	PLYWOOD
PNL	PANEL
PREFAB	PREFABRICATED
PT	POINT, PRESSURE TREATED
PVMT	PAVEMENT
QTY	QUANTITY
R/RAD	RADIUS
REF	REFERENCE
REINF	REINFORCING
REQD	REQUIRED
RF	ROOF
RM	ROOM
SCHED/SCH	SCHEDULE
SEC	SECTION
SF	SQUARE FEET
SHT	SHEET
SIM	SIMILAR
SP	SPACE/SPACES
SPCG	SPACING
SPEC	SPECIFICATIONS
SST	STAINLESS STEEL
STD	STANDARD
STIFF	STIFFENER
STL	STEEL
STRUCT	STRUCTURAL
SYM	SYMMETRICAL
T	TOP
T/	TOP OF
T&B	TOP AND BOTTOM
TB	TOP OF BAR
THK	THICK
TOC	TOP OF CONCRETE
TOS	TOP OF STEEL
TYP	TYPICAL
UBC	UNIFORM BUILDING CODE
UHMW	ULTRA HIGH MOLECULAR WEIGHT
UNO	UNLESS NOTED OTHERWISE
UON	UNLESS OTHERWISE NOTED
UPR	UPPER
UT	ULTRASONIC TESTING
VEF	VERTICAL EACH FACE
VERT	VERTICAL
VIF	VERTICAL INSIDE FACE
VOF	VERTICAL OUTSIDE FACE
W/	WITH
W OR WF	WIDE FLANGE (BEAM)
WGT	WEIGHT
W/O	WITHOUT
WP	WORK POINT
WS	WATERSTOP
WT	TEE
&	AND
@	AT
°	DEGREE
Ø	DIAMETER
'	FEET
"	INCHES
#	NUMBER
±	PLUS OR MINUS

ARCHITECTURAL LEGEND

CMU IN PLAN

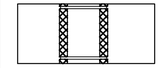
CMU IN SECTION

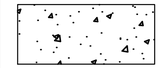
CONCRETE IN SECTION

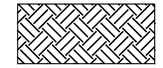
EARTH IN SECTION

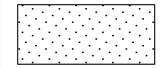
GROUT IN SECTION

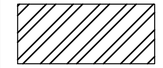
STEEL IN SECTION

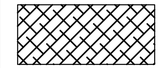
VOID FORM IN SECTION

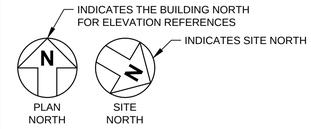

ANNOTATION

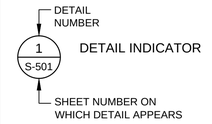

GENERAL SHEET NOTES

1. ABBREVIATIONS ON THIS SHEET APPLY ONLY TO THE ARCHITECTURAL DRAWINGS, REFER TO OTHER DISCIPLINES FOR APPLICABLE SYMBOLS NOT PROVIDED HERE
2. THIS IS A STANDARD ABBREVIATION AND LEGEND SHEET, THEREFORE, SOME ABBREVIATIONS AND LEGEND SYMBOLS MAY APPEAR ON THIS SHEET AND MAY NOT BE UTILIZED ON THIS PROJECT
3. DO NOT SCALE DRAWINGS

6/27/14

GHD Inc.
1735 North First Street Suite 301 San Jose California 95112 USA
T 1 408 451 9615 F 1 408 451 9665
W www.ghd.com

DATE	REVISION	BY

CITY OF SANTA CLARA
WATER & SEWER UTILITIES

NORTHSIDE TANKS SITE IMPROVEMENTS PROJECT
ARCHITECTURAL ABBREVIATIONS, LEGEND, AND NOTES

APPROVED DATE
DIRECTOR OF WATER & SEWER UTILITIES

PROJ. NO.	592-1423-80300-7054-(I)30148		
DESIGNED BY	NK	DRAWN BY	CF
CHECKED BY	AC	YEAR	2014
DATE	JULY 2014	BLK. BK. PG.	94
DRAWING NO.	A001	SHT. 15	OF 49
HORIZ.	NOTED	VERT. –	DWG. NO. W-3143-4

Plot Date: 24 June 2014 - 12:22 AM Plotted by: Ming Yee Cad File No: G:\11205 City of Santa Clara\8410306 Northside Tanks Piping Reconfig\06-CAD\Sheets\8410306 A001.dwg

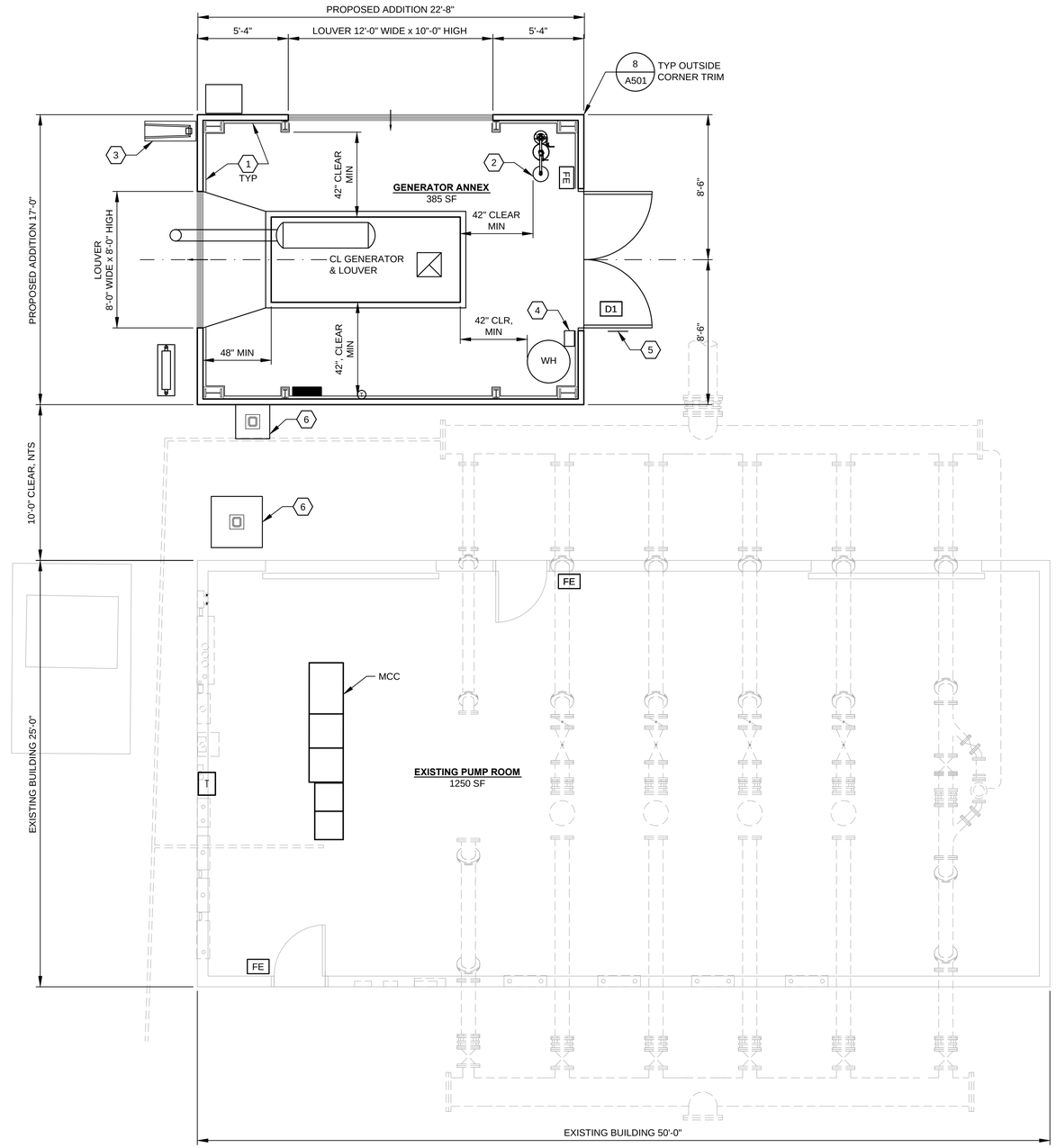

FLOOR PLAN PROPOSED ADDITION

1/4"=1'-0" 0 2' 4' 8'

PLAN NORTH

SITE NORTH

SHEET GENERAL NOTES

1. REFER TO CIVIL, STRUCTURAL, MECHANICAL, AND ELECTRICAL DRAWINGS FOR INFORMATION NOT SHOWN
2. REFERENCE T/SLAB EL(+)0'-0" = DATUM EL 21.00
3. FE INDICATES FIRE EXTINGUISHER 4A;80B:C, LOCATE AS SHOWN
4. D# INDICATES DOOR NUMBER, SEE SCHEDULE DRAWING A601

KEYNOTES

1. ACOUSTICAL WALL PANELS- INSTALL PANELS ON ALL GENERATOR ANNEX WALLS, INCLUDING AREAS ABOVE AND BELOW LOUVERS AND DOORS WHERE WALL OCCURS
2. SHOWER/EYEWASH
3. DOWNSPOUT WITH CONCRETE SPLASH BLOCK, SPLASH BLOCK PER 15/A501
4. PROVIDE WALL MOUNTED EARPLUG DISPENSER WITH INDIVIDUALLY PACKAGED EARPLUGS
5. PROVIDE 14"x10" SURFACE MOUNTED CAUTION SIGN: *"HEARING PROTECTION REQUIRED IN THIS AREA"*
6. CONDUIT SUPPORT FOUNDATION AND COLUMN SEE STRUCTURAL DRAWINGS

BUILDING DATA

ADDRESS:	2339 GIANERA STREET SANTA CLARA, CA 95054
CODE SUMMARY:	2013 CALIFORNIA BUILDING, GREEN BUILDING STANDARDS, FIRE, ELECTRICAL, PLUMBING AND MECHANICAL CODES 2012 INTERNATIONAL BUILDING CODE 2013 UNIFORM PLUMBING CODE 2013 UNIFORM MECHANICAL CODE 2013 NATIONAL ELECTRIC CODE 2013 INTERNATIONAL EXISTING BUILDING CODE
OCCUPANCY:	F-1 FACTORY INDUSTRIAL, MODERATE-HAZARD, GENERATOR ANNEX, AND EXISTING BUILDING
CONSTRUCTION:	TYPE V-B
SEISMIC DESIGN CATEGORY:	D
AUTOMATIC FIRE SPRINKLERS:	NO
FIRE ALARM:	NO
BUILDING HEIGHT:	15'-0" PROPOSED, 15'-0" EXISTING
NUMBER OF STORIES:	1
ALLOWABLE FLOOR:	9,000 S.F.
AREA INCREASES:	NONE
BUILDING AREA:	GENERATOR ANNEX- PROPOSED F-1 385 S.F. EXISTING 1,250 S.F. TOTAL 1,635 S.F.

A FIRE DEPARTMENT ROUGH AND FINAL INSPECTION IS REQUIRED

GHD Inc.
1735 North First Street Suite 301 San Jose California 95112 USA
T 1 408 451 9615 F 1 408 451 9665
W www.ghd.com

6/27/14

DATE	REVISION	BY

CITY OF SANTA CLARA
WATER & SEWER UTILITIES

NORTHSIDE TANKS SITE IMPROVEMENTS PROJECT
FLOOR PLAN PROPOSED ADDITION

APPROVED DATE
DIRECTOR OF WATER & SEWER UTILITIES

PROJ. NO.	592-1423-80300-7054-(I)30148		
DESIGNED BY	NK	DRAWN BY	CF
CHECKED BY	AC	YEAR	2014
DATE	JULY 2014	BLK. BK. PG.	94
DRAWING NO.	A101	SHT. 16	OF 49
HORIZ.	NOTED	VERT. –	DWG. NO. W-3143-4

Plot Date: 24 June 2014 - 12:26 AM Plotted by: Ming Yee Cad File No: G:\11205 City of Santa Clara\8410306 Northside Tanks Piping Reconfig\06-CAD\Sheets\8410306 A101.dwg

SHEET GENERAL NOTES

1. REFER TO CIVIL, STRUCTURAL, MECHANICAL, AND ELECTRICAL DRAWINGS FOR INFORMATION NOT SHOWN
2. REFERENCE T/SLAB EL(+)0'-0" = DATUM EL 21.00
3. COORDINATE LOCATION OF ROOF OPENINGS WITH EQUIPMENT MANUFACTURER'S AND MECHANICAL DRAWINGS

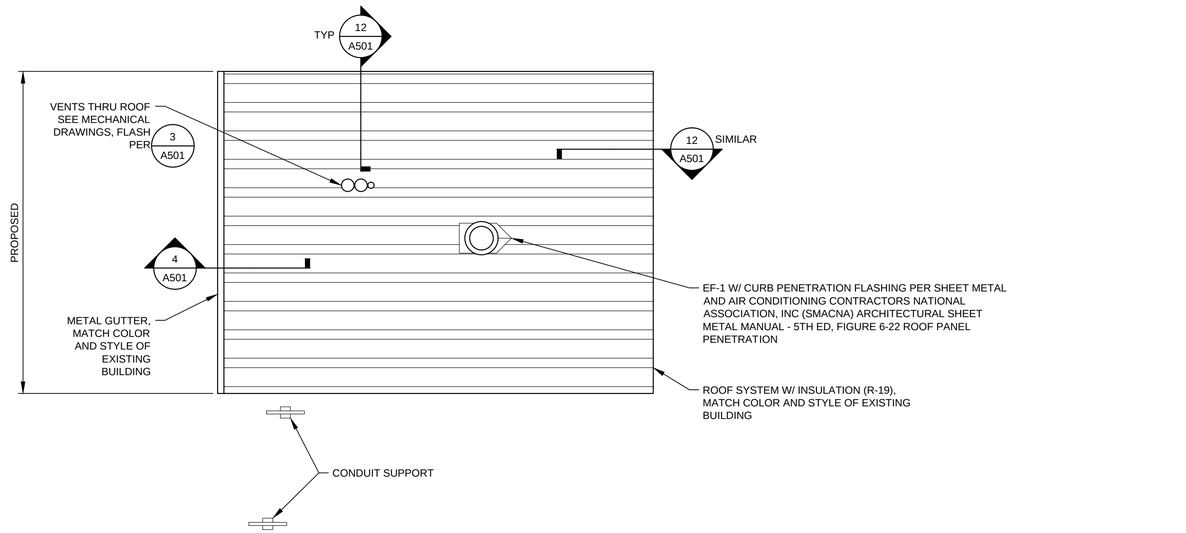

ROOF PLAN

1/4"=1'-0" 0 2' 4' 8'

N
PLAN NORTH

SITE NORTH

GHD Inc.
1735 North First Street Suite 301 San Jose California 95112 USA
T 1 408 451 9615 **F** 1 408 451 9665
W www.ghd.com

6/27/14

DATE	REVISION	BY

CITY OF SANTA CLARA
WATER & SEWER UTILITIES

NORTHSIDE TANKS SITE IMPROVEMENTS PROJECT
ROOF PLAN

APPROVED DATE
DIRECTOR OF WATER & SEWER UTILITIES

PROJ. NO.	592-1423-80300-7054-(I)30148		
DESIGNED BY	NK	DRAWN BY	CF
CHECKED BY	AC	YEAR	2014
DATE	JULY 2014	BLK. BK. PG.	94
DRAWING NO.	A102	SHT. 17	OF 49
HORIZ.	NOTED	VERT. –	DWG. NO. W-3143-4

Plot Date: 24 June 2014 - 12:08 AM Plotted by: Ming Yee Cad File No: G:\11205 City of Santa Clara\8410306 Northside Tanks Piping Reconfig\06-CAD\Sheets\8410306 A102.dwg

SHEET GENERAL NOTES

1. REFER TO CIVIL, STRUCTURAL, MECHANICAL, AND ELECTRICAL DRAWINGS FOR INFORMATION NOT SHOWN
2. REFERENCE T/SLAB EL(+)0'-0" = DATUM EL 21.00
3. VERIFY ALL EXISTING DIMENSIONS IN FIELD

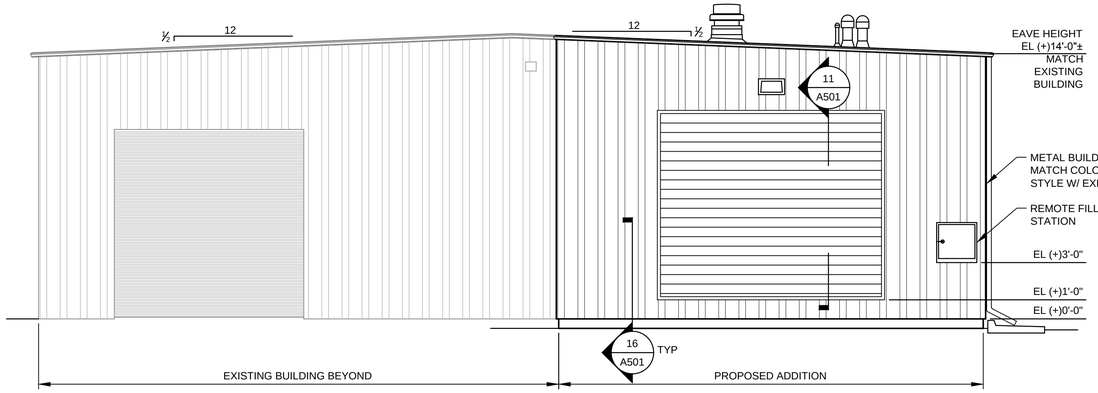

PLAN NORTH ELEVATION

1/4"=1'-0" 0 2' 4' 8'

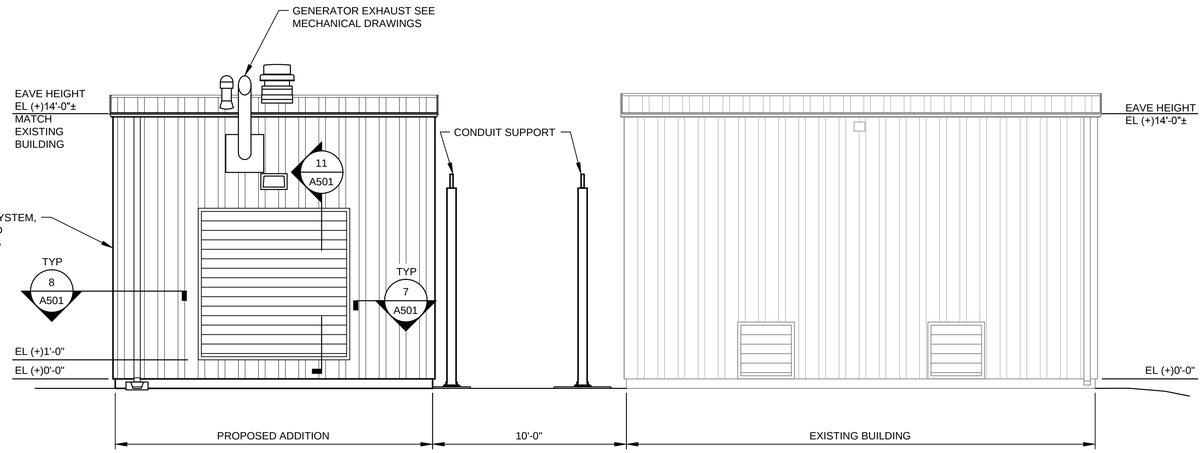

PLAN WEST ELEVATION

1/4"=1'-0" 0 2' 4' 8'

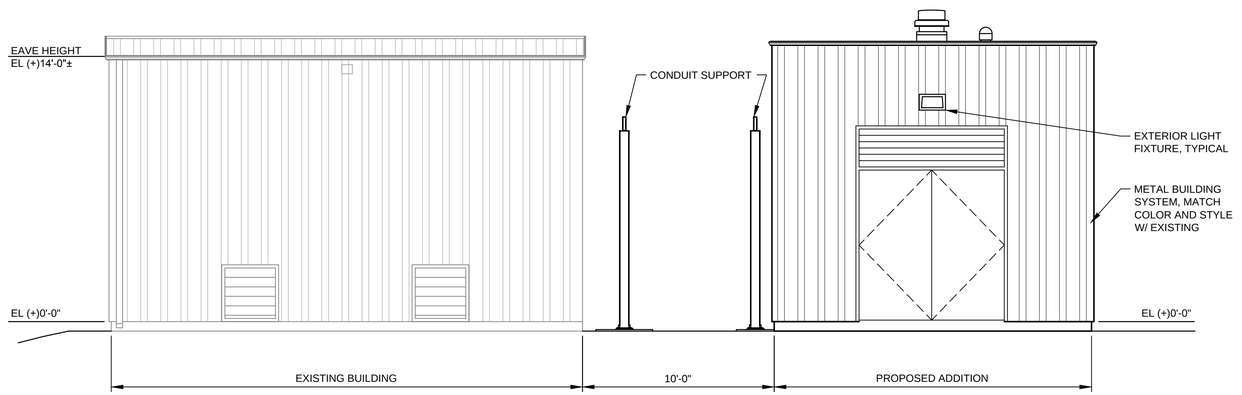

PLAN EAST ELEVATION

1/4"=1'-0" 0 2' 4' 8'

GHD Inc.
1735 North First Street Suite 301 San Jose California 95112 USA
T 1 408 451 9615 **F** 1 408 451 9665
W www.ghd.com

6/27/14

DATE	REVISION	BY

CITY OF SANTA CLARA
WATER & SEWER UTILITIES

NORTHSIDE TANKS SITE IMPROVEMENTS PROJECT
EXTERIOR ELEVATIONS

APPROVED DATE
DIRECTOR OF WATER & SEWER UTILITIES

PROJ. NO.	592-1423-80300-7054-(I)30148		
DESIGNED BY	NK	DRAWN BY	CF
CHECKED BY	AC	YEAR	2014
DATE	JULY 2014	BLK. BK. PG.	94
DRAWING NO.	A201	SHT. 18	OF 49
HORIZ.	NOTED	VERT. –	DWG. NO. W-3143-4

Plot Date: 24 June 2014 - 12:08 AM Plotted by: Ming Yee Cad File No: G:\11205 City of Santa Clara\8410306 Northside Tanks Piping Reconfig\06-CAD\Sheets\8410306 A201.dwg

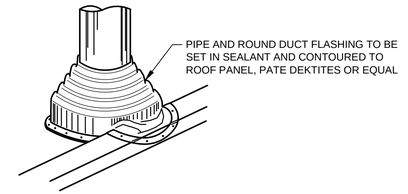

3 A102 **PIPE FLASHING**
SCALE: NOT TO SCALE

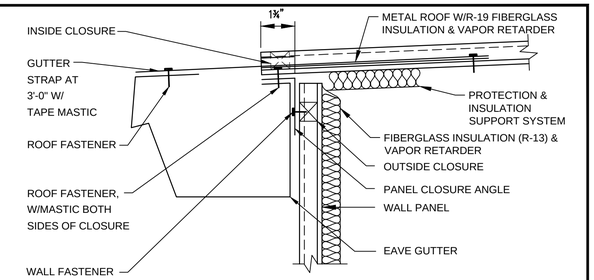

NOTES:
1. SIDING/ROOF FASTENER SIZES AND SPACING PER MANUFACTURERS SPECIFICATIONS

4 A102 **EAVE**
SCALE: NOT TO SCALE

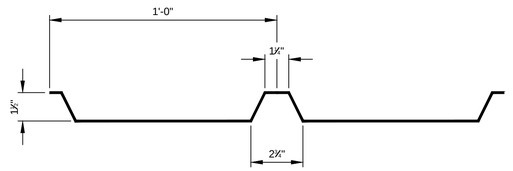

NOTES:
1. PANELS ARE ASSUMED TO BE BUTLERIB II PANELS, VERIFY IN FIELD, SIDING/ROOF PROFILE DIMENSIONS ARE AS SHOWN. CONTRACTOR TO MATCH PANEL PROFILE OF EXISTING PUMP STATION BUILDING

7 A201 **METAL ROOF AND WALL PANEL PROFILE**
SCALE: NOT TO SCALE

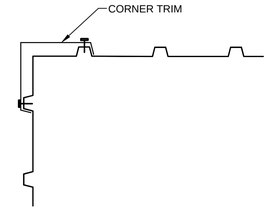

NOTES:
1. SIDING/ROOF FASTENER SIZES AND SPACING PER MANUFACTURERS SPECIFICATIONS

8 A101 **OUTSIDE CORNER TRIM**
SCALE: NOT TO SCALE

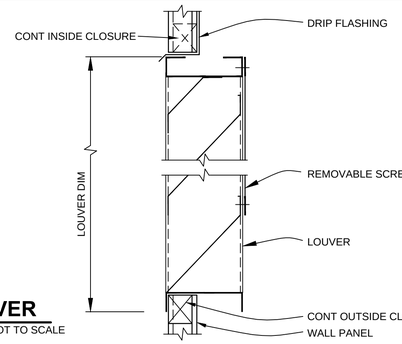

11 A201 **LOUVER**
SCALE: NOT TO SCALE

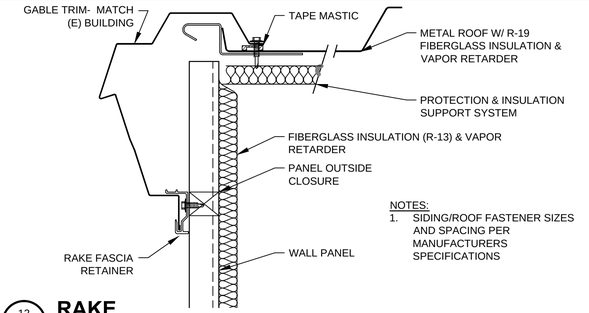

NOTES:
1. SIDING/ROOF FASTENER SIZES AND SPACING PER MANUFACTURERS SPECIFICATIONS

12 A102 **RAKE**
SCALE: NOT TO SCALE

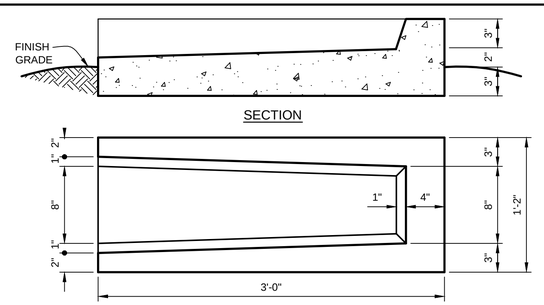

15 A101 **CONCRETE SPLASH BLOCK**
SCALE: NOT TO SCALE

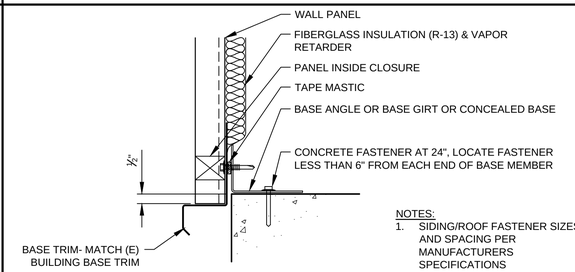

NOTES:
1. SIDING/ROOF FASTENER SIZES AND SPACING PER MANUFACTURERS SPECIFICATIONS

16 A201 **WALL BASE**
SCALE: NOT TO SCALE

GHD Inc.
1735 North First Street Suite 301 San Jose California 95112 USA
T 1 408 451 9615 **F** 1 408 451 9665
W www.ghd.com

6/27/14

DATE	REVISION	BY

CITY OF SANTA CLARA
WATER & SEWER UTILITIES

NORTHSIDE TANKS SITE IMPROVEMENTS PROJECT
DETAILS

APPROVED DATE
DIRECTOR OF WATER & SEWER UTILITIES

PROJ. NO.	592-1423-80300-7054-(I)30148		
DESIGNED BY	NK	DRAWN BY	CF
CHECKED BY	AC	YEAR	2014
DATE	JULY 2014	BLK. BK. PG.	94
DRAWING NO.	A501	SHT. 19	OF 49
HORIZ.	NOTED	VERT. –	DWG. NO. W-3143-4

Plot Date: 24 June 2014 - 12:09 AM Plotted by: Ming Yee Cad File No: G:\11205 City of Santa Clara\8410306 Northside Tanks Piping Reconfig\06-CAD\Sheets\8410306 A501.dwg

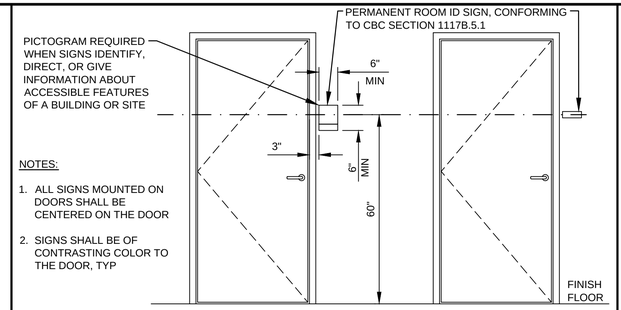

NOTES:

1. ALL SIGNS MOUNTED ON DOORS SHALL BE CENTERED ON THE DOOR
2. SIGNS SHALL BE OF CONTRASTING COLOR TO THE DOOR, TYP

2 / A601 **TYPICAL DOOR SIGNAGE**

SCALE: NOT TO SCALE

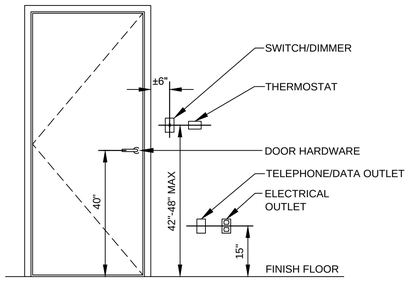

6 / A601 **TYPICAL MOUNTING HEIGHTS**

SCALE: NOT TO SCALE

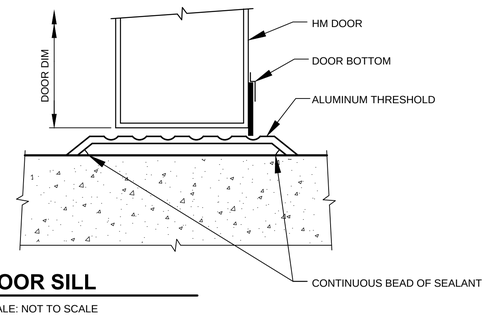

14 / A601 **DOOR SILL**

SCALE: NOT TO SCALE

DOOR SCHEDULE

DOOR #	OPENING					FRAME					MISCELLANEOUS			HARDWARE GROUP PER SPECIFICATIONS
	DOOR SIZE			DOOR		MAT'L	TYPE	DETAIL			R FACTOR	FIRE RATING	SIGNAGE	
	WIDTH	HEIGHT	THICKNESS	MAT'L	TYPE			HEAD	JAMB	SILL				
1	PR 4'-0"	8'-0"	1 3/4"	HM	M	HM	F1	PER MTL BLDG MFR	PER MTL BLDG MFR	14/A601	14.97±	NONE	SEE NOTE 1	HW-1

DOOR SCHEDULE NOTES:

1. PROVIDE ROOM IDENTIFICATION SIGN, 1" HIGH TEXT, GRADE 2 BRAILLE, MOUNT ON WALL ADJACENT TO LATCH SIDE OF DOOR, TO THE RIGHT SIDE OF DOUBLE LEAF DOOR, MOUNT 60" ABOVE FINISH FLOOR TO CENTERLINE OF SIGN, SEE 2/A601

DOOR TYPES

M

FRAME TYPES

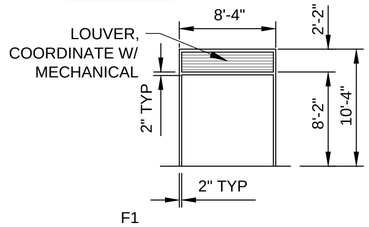

F1

DOOR SCHEDULE ABBREVIATIONS:

BLDG	BUILDING
HM	HOLLOW METAL
HW	HARDWARE
MAT'L	MATERIAL
MFR	MANUFACTURER
MTL	METAL
PR	PAIR
#	NUMBER

6/27/14

GHD Inc.
1735 North First Street Suite 301 San Jose California 95112 USA
T 1 408 451 9615 **F** 1 408 451 9665
W www.ghd.com

DATE	REVISION	BY

CITY OF SANTA CLARA
WATER & SEWER UTILITIES

NORTHSIDE TANKS SITE IMPROVEMENTS PROJECT
STRUCTURAL LEGEND AND NOTES

APPROVED DATE

DIRECTOR OF WATER & SEWER UTILITIES

PROJ. NO.	592-1423-80300-7054-(I)30148		
DESIGNED BY	NK	DRAWN BY	CF
CHECKED BY	AC	YEAR	2014
DATE	JULY 2014	BLK. BK. PG.	94
DRAWING NO.	A601	SHT. 20	OF 49
HORIZ.	NOTED	VERT. –	DWG. NO. W-3143-4

Plot Date: 24 June 2014 - 12:09 AM Plotted by: Ming Yee Cad File No: G:\11205 City of Santa Clara\8410306 Northside Tanks Piping Reconfig\06-CAD\Sheets\8410306 A601.dwg

STRUCTURAL ABBREVIATIONS

AB	ANCHOR BOLT
ABC	AGGREGATE BASE COURSE
ABV	ABOVE
ACI	AMERICAN CONCRETE INSTITUTE
ADD'L	ADDITIONAL
AISC	AMERICAN INSTITUTE OF STEEL CONSTRUCTION
AISI	AMERICAN IRON AND STEEL INSTITUTE
AITC	AMERICAN INSTITUTE OF TIMBER CONSTRUCTION
ALT	ALTERNATE
ANSI	AMERICAN NATIONAL STANDARDS INSTITUTE
APA	AMERICAN PLYWOOD ASSOCIATION
ARCH	ARCHITECT/ARCHITECTURAL
ASNT	AMERICAN SOCIETY FOR NONDESTRUCTIVE TESTING
ASTM	AMERICAN SOCIETY FOR TESTING AND MATERIALS
AWS	AMERICAN WELDING SOCIETY
&	AND
@	AT
B	BOTTOM
B/	BOTTOM OF
BB	BOTTOM BARS
BLDG	BUILDING
BLKG	BLOCKING
BM	BEAM
BN	BOUNDARY NAIL
BO	BOND
BRG	BEARING
BS	BOTH SIDES
BTWN	BETWEEN
C	CHANNEL
CA	CALIFORNIA
C/C	CENTER TO CENTER
CANT	CANTILEVER
CAP	CAPACITY
CBC	CALIFORNIA BUILDING CODE
CF	CONTRACTOR FURNISHED
CI	CONTRACTOR INSTALLED
CJ	CONTRACTION/CONTROL JOINT
CL	CENTERLINE
CLR	CLEAR
CLG	CEILING
CMU	CONCRETE MASONRY UNIT
COL	COLUMN
CONC	CONCRETE
CONN	CONNECTION
CONSTR	CONSTRUCTION
CONT	CONTINUOUS
COORD	COORDINATE
CRSI	CONCRETE REINFORCING STEEL INSTITUTE
CTR/CTR'D	CENTER/CENTERED
d	PENNY (NAIL SIZE)
DBL	DOUBLE
DET	DETAIL
DF	DOUGLAS FIR
DIA	DIAMETER
DIAG	DIAGONAL
DIM	DIMENSION
DISCONT	DISCONTINUE
DL	DEAD LOAD
DN	DOWN
Do	DITTO
DP	DEEP
DWG	DRAWING
DWL	DOWEL
E	EXISTING
EA	EACH
EF	EACH FACE
EG	EXAMPLE
EL	ELEVATION
EMBED	EMBEDMENT
EN	EDGE NAIL
ENGR	ENGINEER
EQ	EQUAL
EQUIP	EQUIPMENT
ETC	ET CETERA
EW	EACH WAY
EWEF	EACH WAY EACH FACE
EXIST	EXISTING
EXP	EXPANSION
EXT	EXTERIOR
FF	FINISHED FLOOR
FG	FINISHED GRADE
FH	FULL HEIGHT
FIN	FINISH
FL	FLOOR
FLG	FLANGE
FN	FACE NAIL
FND	FOUNDATION
FO	FACE OF
FOM	FACE OF MASONRY
FOW	FACE OF WALL
FRMG	FRAMING
FS	FAR SIDE
FTG	FOOTING
GA	GAUGE
GALV	GALVANIZED
GF	GOVERNMENT FURNISHED
GRT	GROUT
GSN	GENERAL STRUCTURAL NOTES
GYP	GYPSUM
HAS	HEADED ANCHOR STUDS
HD	HAND
HDG	HOT DIP GALVANIZED
HEF	HORIZONTAL EACH FACE
HIF	HORIZONTAL INSIDE FACE
HK	HOOK
HM	HOLLOW METAL
HOF	HORIZONTAL OUTSIDE FACE
HORIZ	HORIZONTAL
HP	HIGH POINT
HSS	HOLLOW STRUCTURAL SECTION
HT	HEIGHT
IBC	INTERNATIONAL BUILDING CODE
ID	INSIDE DIAMETER
IE	THAT IS
INFO	INFORMATION
INT	INTERIOR
INTERMED	INTERMEDIATE
INTERSECT	INTERSECTION
INV	INVERT
JST	JOIST
JT	JOINT
L	ANGLE
LG	LONG
LL	LIVE LOAD
LLH	LONG LEG HORIZONTAL
LLV	LONG LEG VERTICAL
LOC	LOCATION
LONGIT	LONGITUDINAL
LP	LOW POINT
LT	LEFT
MACH	MACHINE
MAINT	MAINTENANCE
MAS	MASONRY
MAX	MAXIMUM
MB	MACHINE BOLT
MC	CHANNEL
MCJT	MASONRY CONTROL JOINT
MECH	MECHANICAL
MFR	MANUFACTURER
MIN	MINIMUM
MNTG	MOUNTING
MOD	MODIFIED
MTL	METAL
N	NEW
NIC	NOT IN CONTRACT
NOM	NOMINAL
NS	NEAR SIDE
NTS	NOT TO SCALE
#	NUMBER
OC	ON CENTER
OD	OUTSIDE DIAMETER
OF	OUTSIDE FACE
OFCI	OWNER FURNISHED CONTRACTOR INSTALLED
OPG	OPENING
OPP	OPPOSITE
MO	MASONRY OPENING
PEB	PRE ENGINEERED BUILDING
PEMB	PRE ENGINEERED METAL BLDG
PL	PLATE
PLCS	PLACES
PLYWD	PLYWOOD
PNL	PANEL
PREFAB	PREFABRICATED
PT	POINT, PRESSURE TREATED
PVMT	PAVEMENT
QTY	QUANTITY
R	RADIUS
REF	REFERENCE
REINF	REINFORCING
REQD	REQUIRED
RM	ROOM
SCHED	SCHEDULE
SHT	SHEET
SIM	SIMILAR
SP	SPACE/SPACES
SPC'G	SPACING
SPEC	SPECIFICATIONS
SST	STAINLESS STEEL
STD	STANDARD
STIFF	STIFFENER
STL	STEEL
STRUCT	STRUCTURAL
SYMM	SYMMETRICAL
T	TOP
T/	TOP OF
T & B	TOP AND BOTTOM
TB	TOP OF BAR
THK	THICK
TOC	TOP OF CONCRETE
TOW	TOP OF WALL
TYP	TYPICAL
UNO	UNLESS NOTED OTHERWISE
UON	UNLESS OTHERWISE NOTED
VEF	VERTICAL EACH FACE
VERT	VERTICAL
VIF	VERTICAL INSIDE FACE
VOF	VERTICAL OUTSIDE FACE
W/	WITH
W OR WF	WIDE FLANGE (BEAM)
W/O	WITHOUT
WP	WORK POINT
WS	WATERSTOP
WT	WEIGHT

GENERAL STRUCTURAL NOTES

1. REFERENCE "GEOTECHNICAL MEMORANDUM NORTHSIDE TANKS PIPING RECONFIGURATION" BY CORNERSTONE EARTH GROUP, DATED MAY 15, 2013, PROJECT NO 138-3-1.
2. CONCRETE STRENGTH AT 28 DAYS, f'c = 4 KSI.
3. REINFORCING BAR STRENGTH, fy = 60 KSI.
4. SUBMIT BUILDING BASE REACTIONS AND EQUIPMENT CUTSHEETS FOR FINAL ANCHORAGE DETAILS.

SHEET ANNOTATION

1 — KEYNOTE

1 — DEMOLITION NOTE

OFFICE 101 — ROOM NAME AND NUMBER (SEE ARCHITECTURAL DRAWINGS)

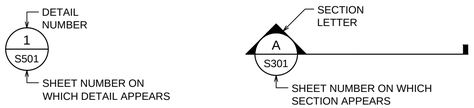

NOTES

1. ABBREVIATIONS ON THIS SHEET APPLY ONLY TO THE STRUCTURAL DRAWINGS, REFER TO OTHER DISCIPLINES FOR APPLICABLE SYMBOLS NOT PROVIDED HERE.
2. THIS IS A STANDARD ABBREVIATIONS SHEET, THEREFORE, SOME ABBREVIATIONS MAY APPEAR ON THIS SHEET AND MAY NOT BE UTILIZED ON THIS PROJECT.

STRUCTURAL SYMBOLS LEGEND

MATERIALS

CONCRETE IN SECTION

GROUT IN SECTION

EARTH IN SECTION

STEEL IN SECTION

GHD Inc.
1735 North First Street Suite 301 San Jose California 95112 USA
T 1 408 451 9615 F 1 408 451 9665
W www.ghd.com

DATE	REVISION	BY

CITY OF SANTA CLARA
WATER & SEWER UTILITIES

NORTHSIDE TANKS SITE IMPROVEMENTS PROJECT
STRUCTURAL LEGEND AND NOTES

APPROVED DATE

DIRECTOR OF WATER & SEWER UTILITIES

PROJ. NO.	592-1423-80300-7054-(I)30148		
DESIGNED BY	NK	DRAWN BY	CF
CHECKED BY	AC	YEAR	2014
DATE	JULY 2014	BLK. BK. PG.	94
DRAWING NO.	S001	SHT. 21	OF 49
HORIZ.	NOTED	VERT. –	DWG. NO. W-3143-4

Plot Date: 24 June 2014 - 12:21 AM Plotted by: Ming Yee Cad File No: G:\11205 City of Santa Clara\8410306 Northside Tanks Piping Reconfig\06-CAD\Sheets\8410306 S001.dwg

STATEMENT OF SPECIAL INSPECTIONS

STATEMENT OF SPECIAL INSPECTIONS

THIS STATEMENT OF SPECIAL INSPECTIONS IS SUBMITTED AS A CONDITION FOR PERMIT ISSUANCE IN ACCORDANCE WITH THE SPECIAL INSPECTION AND STRUCTURAL TESTING REQUIREMENTS OF THE BUILDING CODE SECTIONS 1704 AND 1705.

THIS STATEMENT OF SPECIAL INSPECTIONS ENCOMPASS THE FOLLOWING DISCIPLINES:

- ☒ STRUCTURAL SPECIAL INSPECTIONS PER 1704
- ☒ STRUCTURAL SPECIAL INSPECTIONS FOR SEISMIC RESISTANCE
- ☐ STRUCTURAL SPECIAL INSPECTIONS FOR WIND RESISTANCE

THE SCHEDULE OF SPECIAL INSPECTIONS SUMMARIZES THE SPECIAL INSPECTIONS AND TESTS REQUIRED. SPECIAL INSPECTORS WILL REFER TO THE APPROVED PLANS AND SPECIFICATIONS FOR DETAILED SPECIAL INSPECTION REQUIREMENTS. ANY ADDITIONAL TESTS AND INSPECTIONS REQUIRED BY THE APPROVED PLANS AND SPECIFICATIONS WILL ALSO BE PERFORMED.

THE SPECIAL INSPECTIONS IDENTIFIED ARE IN ADDITION TO THOSE REQUIRED BY OTHER SECTIONS OF THE BUILDING CODE. SPECIAL INSPECTION IS NOT A SUBSTITUTE FOR INSPECTION BY THE BUILDING OFFICIAL

THE SPECIAL INSPECTION COORDINATOR SHALL KEEP RECORDS OF ALL INSPECTIONS AND SHALL FURNISH INSPECTION REPORTS TO THE BUILDING OFFICIAL AND THE REGISTERED DESIGN PROFESSIONAL IN RESPONSIBLE CHARGE. DISCOVERED DISCREPANCIES SHALL BE BROUGHT TO THE IMMEDIATE ATTENTION OF THE CONTRACTOR FOR CORRECTION. IF SUCH DISCREPANCIES ARE NOT CORRECTED, THE DISCREPANCIES SHALL BE BROUGHT TO THE ATTENTION OF THE BUILDING OFFICIAL/CONTRACTING OFFICER AND THE REGISTERED DESIGN PROFESSIONAL IN RESPONSIBLE CHARGE. THE SPECIAL INSPECTION PROGRAM DOES NOT RELIEVE THE CONTRACTOR OF HIS OR HER RESPONSIBILITIES.

INTERIM REPORTS SHALL BE SUBMITTED TO THE BUILDING OFFICIAL AND THE REGISTERED DESIGN PROFESSIONAL IN RESPONSIBLE CHARGE IN ACCORDANCE WITH SECTION 1704.1.2.

A FINAL REPORT OF SPECIAL INSPECTIONS DOCUMENTING COMPLETION OF ALL REQUIRED SPECIAL INSPECTIONS, TESTING AND CORRECTION OF ANY DISCREPANCIES NOTED IN THE INSPECTIONS SHALL BE SUBMITTED PRIOR TO ISSUANCE OF A CERTIFICATE OF USE AND OCCUPANCY PER SECTION 1704.1.2. THE FINAL REPORT WILL DOCUMENT THE REQUIRED SPECIAL INSPECTIONS AND CORRECTION OF DISCREPANCIES NOTED IN INSPECTIONS.

JOB SITE SAFETY AND MEANS AND METHODS OF CONSTRUCTION ARE SOLELY THE RESPONSIBILITY OF THE CONTRACTOR.

THE CONTRACTOR IS REQUIRED TO COORDINATE ALL INSPECTIONS. THE CONTRACTOR SHALL NOTIFY THE OWNER'S REPRESENTATIVE AND THE SPECIAL INSPECTOR A MINIMUM OF 24 HOURS PRIOR TO ANY SPECIAL INSPECTIONS THAT ARE REQUIRED. THE CONTRACTOR SHALL NOTIFY THE OWNER'S REPRESENTATIVE AND THE SPECIAL INSPECTOR A MINIMUM OF 24 HOURS PRIOR TO ANY CONCRETE TO BE POURED.

THE INSPECTORS AND TESTING AGENCIES SHALL BE ENGAGED BY THE OWNER OR THE OWNER'S AGENT, AND NOT BY THE CONTRACTOR OR SUBCONTRACTOR WHOSE WORK IS TO BE INSPECTED OR TESTED PER SECTION 1704.1. ANY CONFLICT OF INTEREST MUST BE DISCLOSED TO THE BUILDING OFFICIAL/CONTRACTING OFFICER, PRIOR TO COMMENCING WORK. IF APPROPRIATE AGENTS ARE NOTED AS "TO BE DETERMINED (TBD)", THE OWNER IS RESPONSIBLE TO COORDINATE THE ASSEMBLY OF A SPECIAL INSPECTION TEAM. ALL SPECIAL INSPECTORS AND QUALIFICATIONS SHALL BE SUBMITTED TO GHD INC. AND THE BUILDING OFFICIAL FOR REVIEW.

SPECIALLY INSPECTED WORK THAT IS INSTALLED OR COVERED WITHOUT THE APPROVAL OF THE BUILDING OFFICIAL IS SUBJECT TO REMOVAL OR EXPOSURE.

CONTINUOUS INSPECTION IS ALWAYS REQUIRED DURING THE PERFORMANCE OF THE WORK UNLESS OTHERWISE SPECIFIED. WHEN WORK IN MORE THAN ONE CATEGORY OF WORK REQUIRING SPECIAL INSPECTION IS TO BE PERFORMED SIMULTANEOUSLY, OR THE GEOGRAPHIC LOCATION OF THE WORK IS SUCH THAT IT CANNOT BE CONTINUOUSLY OBSERVED, IT IS THE AGENT'S RESPONSIBILITY TO EMPLOY A SUFFICIENT NUMBER OF INSPECTORS TO ASSURE THAT ALL THE WORK IS INSPECTED IN ACCORDANCE WITH THE PROVISIONS OF THE BUILDING CODE.

CONTRACTOR STATEMENT OF RESPONSIBILITY

EACH CONTRACTOR RESPONSIBLE FOR THE CONSTRUCTION OR FABRICATION OF A SYSTEM OR COMPONENT DESIGNATED ABOVE AS PART OF THE MAIN WIND FORCE OR MAIN SEISMIC FORCE RESISTING SYSTEMS ABOVE MUST SUBMIT A STATEMENT OF RESPONSIBILITY PER SECTION 1706.

QUALIFICATIONS OF INSPECTORS AND TESTING TECHNICIANS

THE QUALIFICATIONS OF ALL PERSONNEL PERFORMING SPECIAL INSPECTION AND TESTING ACTIVITIES ARE SUBJECT TO THE APPROVAL OF THE BUILDING OFFICIAL. THE CREDENTIALS OF ALL INSPECTORS AND TESTING TECHNICIANS SHALL BE PROVIDED IF REQUESTED.

KEY FOR MINIMUM QUALIFICATIONS OF INSPECTION AGENTS:

WHEN THE REGISTERED DESIGN PROFESSIONAL IN RESPONSIBLE CHARGE DEEMS IT APPROPRIATE THAT THE INDIVIDUAL PERFORMING A STIPULATED TEST OR INSPECTION HAVE A SPECIFIC CERTIFICATION OR LICENSE AS INDICATED BELOW, SUCH DESIGNATION SHALL APPEAR BELOW THE *AGENCY NUMBER* ON THE SCHEDULE.

PE/SE	STRUCTURAL ENGINEER - A LICENSED SE OR PE SPECIALIZING IN THE DESIGN OF BUILDING STRUCTURES
PE/GE	GEOTECHNICAL ENGINEER - A LICENSED GE OR PE SPECIALIZING IN SOIL MECHANICS AND FOUNDATIONS
EIT	ENGINEER-IN-TRAINING - A GRADUATE ENGINEER WHO HAS PASSED THE FUNDAMENTALS OF ENGINEERING EXAMINATION

AMERICAN CONCRETE INSTITUTE (ACI) CERTIFICATION

ACI-CFTT	CONCRETE FIELD TESTING TECHNICIAN - GRADE 1
ACI-CCI	CONCRETE CONSTRUCTION INSPECTOR
ACI-LTT	LABORATORY TESTING TECHNICIAN - GRADE 1&2
ACI-STT	STRENGTH TESTING TECHNICIAN

AMERICAN WELDING SOCIETY (AWS) CERTIFICATION

AWS-CWI	CERTIFIED WELDING INSPECTOR
AWS/AISC-SSI	CERTIFIED STRUCTURAL STEEL INSPECTOR

INTERNATIONAL CODE COUNCIL (ICC) CERTIFICATION

ICC-SMSI	STRUCTURAL MASONRY SPECIAL INSPECTOR
ICC-SWSI	STRUCTURAL STEEL AND WELDING SPECIAL INSPECTOR
ICC-SFSI	SPRAY-APPLIED FIREPROOFING SPECIAL INSPECTOR
ICC-PCSI	PRESTRESSED CONCRETE SPECIAL INSPECTOR
ICC-RCSI	REINFORCED CONCRETE SPECIAL INSPECTOR

AMERICAN SOCIETY OF NONDESTRUCTIVE TESTING (ASNT)

SCHEDULE OF INSPECTION AND TESTING AGENCIES

THIS STATEMENT OF SPECIAL INSPECTIONS / QUALITY ASSURANCE PLAN INCLUDES THE FOLLOWING BUILDING SYSTEMS:

- ☒ SOILS AND FOUNDATIONS
- ☒ CAST-IN-PLACE CONCRETE
- ☐ PRECAST CONCRETE
- ☐ MASONRY LEVEL 1
- ☐ MASONRY LEVEL 2
- ☐ WOOD CONSTRUCTION
- ☐ MECHANICAL & ELECTRICAL SYSTEMS
- ☐ ARCHITECTURAL SYSTEMS
- ☒ STRUCTURAL STEEL
- ☒ COLD-FORMED STEEL FRAMING

SPECIAL INSPECTION AGENCIES	FIRM AND CONTACT INFO.
1. **SPECIAL INSPECTION COORDINATOR**	TBD
2. INSPECTOR	TBD
3. INSPECTOR	TBD
4. TESTING AGENCY	TBD
5. TESTING AGENCY	TBD
6. OTHER	TBD

TABLE 1704.3 - STEEL

ITEM 1:	MATERIAL VERIFICATION OF HIGH-STRENGTH BOLTS, NUTS, AND WASHERS.	**AGENCY # (QUALIF.):** AWS/AISC-SSI, ICC-SWSI
SCOPE:	A. IDENTIFICATION MARKINGS TO CONFORM TO ASTM STANDARDS SPECIFIED IN THE APPROVED CONSTRUCTION DOCUMENTS. ☒ PERIODIC ☐ CONTINUOUS B. MANUFACTURER'S CERTIFICATE OF COMPLIANCE REQUIRED. ☒ PERIODIC ☐ CONTINUOUS	
ITEM 2:	INSPECTION OF HIGH-STRENGTH BOLTING:	**AGENCY # (QUALIF.):** AWS/AISC-SSI, ICC-SWSI
SCOPE:	A. BEARING-TYPE CONNECTIONS. ☒ PERIODIC ☐ CONTINUOUS B. SLIP-CRITICAL CONNECTIONS ☐ PERIODIC ☒ CONTINUOUS	
ITEM 3:	MATERIAL VERIFICATION OF STRUCTURAL STEEL	**AGENCY # (QUALIF.):** PE/SE
SCOPE:	A. IDENTIFICATION MARKINGS TO CONFORM TO ASTM STANDARDS SPECIFIED IN THE APPROVED DOCUMENTS. ☒ PERIODIC ☐ CONTINUOUS B. MANUFACTURER'S MILL TEST REPORTS ☒ PERIODIC ☐ CONTINUOUS	
ITEM 4:	MATERIAL VERIFICATION OF WELD FILLER MATERIALS.	**AGENCY # (QUALIF.):** AWS-CWI, ASNT
SCOPE:	A. IDENTIFICATION MARKINGS TO CONFORM TO AWS DESIGNATION LISTED IN THE WPS. ☒ PERIODIC ☐ CONTINUOUS B. MANUFACTURER'S CERTIFICATE OF COMPLIANCE REQUIRED. ☒ PERIODIC ☐ CONTINUOUS	
ITEM 5:	INSPECTION OF WELDING:	**AGENCY # (QUALIF.):** AWS-CWI, ASNT
SCOPE:	A. STRUCTURAL STEEL 1) COMPLETE AND PARTIAL PENETRATION GROOVE WELDS. ☐ PERIODIC ☒ CONTINUOUS 2) MULTIPASS FILLET WELDS. ☐ PERIODIC ☒ CONTINUOUS 3) SINGLE-PASS FILLET WELDS > 5/16". ☐ PERIODIC ☒ CONTINUOUS 4) SINGLE-PASS FILLET WELDS <= 5/16". ☒ PERIODIC ☐ CONTINUOUS 5) FLOOR AND ROOF DECK WELDS. ☒ PERIODIC ☐ CONTINUOUS B. REINFORCING STEEL 1) VERIFICATION OF WELDABILITY OF REINFORCING STEEL OTHER THAN ASTM A706. ☒ PERIODIC ☐ CONTINUOUS 2) REINFORCING STEEL-RESISTING FLEXURAL AND AXIAL FORCES IN INTERMEDIATE AND SPECIAL MOMENT FRAMES, AND BOUNDARY ELEMENTS OF SPECIAL REINFORCED CONCRETE SHEAR WALLS, AND SHEAR REINFORCEMENT. ☐ PERIODIC ☒ CONTINUOUS 3) SHEAR REINFORCEMENT ☐ PERIODIC ☒ CONTINUOUS 4) OTHER REINFORCING STEEL ☒ PERIODIC ☐ CONTINUOUS	
ITEM 6:	INSPECTION OF STEEL FRAME JOINT DETAILS FOR COMPLIANCE WITH APPROVED CONSTRUCTION DOCUMENTS:	**AGENCY # (QUALIF.):** PE/SE
SCOPE:	INSPECTION OF STEEL FRAME JOINT DETAILS FOR COMPLIANCE WITH APPROVED CONSTRUCTION DOCUMENTS: A) DETAILS SUCH AS BRACING AND STIFFENING. ☒ PERIODIC ☐ CONTINUOUS B) MEMEBER LOCATIONS. ☒ PERIODIC ☐ CONTINUOUS C) APPLICATION OF JOINT DETAILS AT EACH CONNECTION. ☒ PERIODIC ☐ CONTINUOUS	
ITEM 7:	WELDED STUDS WHEN USED FOR STRUCTURAL DIAPHRAGMS: ☒ PERIODIC ☐ CONTINUOUS	**AGENCY # (QUALIF.):** AWS-CWI, ASNT
ITEM 8:	WELDING OF COLD-FORMED SHEET STEEL FRAMING MEMBERS: ☒ PERIODIC ☐ CONTINUOUS	**AGENCY # (QUALIF.):** AWS-CWI, ASNT
ITEM 9:	WELDING OF STAIRS AND RAILING SYSTEMS: ☒ PERIODIC ☐ CONTINUOUS	**AGENCY # (QUALIF.):** AWS-CWI, ASNT

TABLE 1704.4 - CONCRETE

ITEM 1:	INSPECTION OF REINFORCING STEEL, INCLUDING PRESTRESSING TENDONS AND PLACEMENT. ☒ PERIODIC ☐ CONTINUOUS	**AGENCY # (QUALIF.):** ACI-CCI, ICC-RCSI
ITEM 3:	INSPECT BOLTS TO BE INSTALLED IN CONCRETE PRIOR TO AND DURING PLACEMENT OF CONCRETE ☐ PERIODIC ☒ CONTINUOUS	**AGENCY # (QUALIF.):** ACI-CCI, ICC-RCSI
ITEM 4:	INSPECTION OF ANCHORS INSTALLED IN HARDENED CONCRETE. ☒ PERIODIC ☐ CONTINUOUS	**AGENCY # (QUALIF.):** ACI-CCI, ICC-RCSI
ITEM 5:	VERIFYING USE OF REQUIRED DESIGN MIX. ☒ PERIODIC ☐ CONTINUOUS	**AGENCY # (QUALIF.):** ACI-CCI, ICC-RCSI
ITEM 6:	AT TIME FRESH CONCRETE IS SAMPLED TO FABRICATE SPECIMENS FOR STRENGTH TESTS, PERFORM SLUMP AND AIR CONTENT TESTS AND DETERMINE THE TEMPERATURE OF THE CONCRETE. ☐ PERIODIC ☒ CONTINUOUS	**AGENCY # (QUALIF.):** ACI-CFTT, ACI-STT
ITEM 7:	INSPECTION OF CONCRETE AND SHOTCRETE PLACEMENT FOR PROPER APPLICATION TECHNIQUES. ☐ PERIODIC ☒ CONTINUOUS	**AGENCY # (QUALIF.):** ACI-CCI, ICC-RCSI
ITEM 8:	INSPECTION FOR MAINTENANCE OF SPECIFIED CURING TEMPERATURE AND TECHNIQUES. ☒ PERIODIC ☐ CONTINUOUS	**AGENCY # (QUALIF.):** ACI-CCI, ICC-RCSI
ITEM 11:	VERIFICATION OF IN-SITU CONCRETE STRENGTH, PRIOR TO STRESSING OF TENDONS IN POSTENSIONED CONCRETE AND PRIOR TO REMOVAL OF SHORES AND FORMS FROM BEAMS AND STRUCTURAL SLABS. ☒ PERIODIC ☐ CONTINUOUS	**AGENCY # (QUALIF.):** ACI-CFTT, ACI-STT
ITEM 12:	INSPECT FORMWORK FOR SHAPE, LOCATION, AND DIMENSIONS OF THE CONCRETE MEMBER BEING FORMED. ☒ PERIODIC ☐ CONTINUOUS	**AGENCY # (QUALIF.):** ACI-CCI, ICC-RCSI

TABLE 1704.7 - INSPECTION OF SOILS

ITEM 1:	VERIFY MATERIALS BELOW FOOTINGS ARE ADEQUATE TO ACHIEVE THE DESIRED BEARING CAPACITY. ☒ PERIODIC ☐ CONTINUOUS	**AGENCY # (QUALIF.):** PE/GE
ITEM 2:	VERIFY EXCAVATIONS ARE EXTENDED TO PROPER DEPTH AND HAVE REACHED PROPER MATERIAL. ☒ PERIODIC ☐ CONTINUOUS	**AGENCY # (QUALIF.):** PE/GE
ITEM 3:	PERFORM CLASSIFICATION AND TESTING OF CONTROLLED FILL MATERIALS. PERFORM SIEVE TESTS (ASTM D422 & D1140); ATTERBERG LIMIT TEST (ASTM D4318) AND MODIFIED PROCTOR TESTS (ASTM D1557) OF EACH SOURCE OF FILL MATERIAL. ☒ PERIODIC ☐ CONTINUOUS	**AGENCY # (QUALIF.):** PE/GE
ITEM 4:	VERIFY USE OF PROPER MATERIALS, DENSITIES AND LIFT THICKNESSES DURING PLACEMENT AND COMPACTION OF CONTROLLED FILL. TEST DENSITY OF EACH LIFT OF FILL BY NUCLEAR METHODS (ASTM D6938) OR SAND CONE (ASTM D1556). VERIFY EXTENT AND SLOPE OF FILL PLACEMENT. VERIFY COMPACTION OF FILL AND BACKFILL MATERIAL TO 95 PERCENT OF ASTM D 1557. TEST EACH LIFT AT RANDOMLY SELECTED LOCATIONS EVERY 1000 SQUARE FEET OF FILL OR 50 LINEAR FOOT OF WALL OR CONTINUOUS FOOTING, WHICHEVER IS GREATER. PERFORM A MINIMUM OF ONE TEST PER ISOLATED FOOTING. PERFORM 3 TEST MINIMUM PER LIFT. ☐ PERIODIC ☒ CONTINUOUS	**AGENCY # (QUALIF.):** PE/GE
ITEM 5:	PRIOR TO PLACEMENT OF CONTROLLED FILL, OBSERVE SUBGRADE AND VERIFY THAT SITE HAS BEEN PREPARED PROPERLY. ☒ PERIODIC ☐ CONTINUOUS	**AGENCY # (QUALIF.):** PE/GE
NOTES:	SEE GENERAL STRUCTURAL NOTES FOR REFERENCE GEOTECHNICAL REPORT AND DESIGN BEARING CAPACITIES.	

GHD Inc.
1735 North First Street Suite 301 San Jose California 95112 USA
T 1 408 451 9615 **F** 1 408 451 9665
W www.ghd.com

DATE	REVISION	BY

CITY OF SANTA CLARA
WATER & SEWER UTILITIES

NORTHSIDE TANKS SITE IMPROVEMENTS PROJECT
SPECIAL INSPECTIONS

APPROVED DATE
DIRECTOR OF WATER & SEWER UTILITIES

PROJ. NO.	592-1423-80300-7054-(I)30148		
DESIGNED BY	NK	DRAWN BY	CF
CHECKED BY	AC	YEAR	2014
DATE	JULY 2014	BLK. BK. PG.	94
DRAWING NO.	S002	SHT. 22	OF 49
HORIZ.	NOTED	VERT. –	DWG. NO. W-3143-4

Plot Date: 24 June 2014 - 12:21 AM Plotted by: Ming Yee Cad File No: G:\11205 City of Santa Clara\8410306 Northside Tanks Piping Reconfig\06-CAD\Sheets\8410306 S002.dwg

STRUCTURAL GENERAL NOTES

GENERAL

1. DESIGN CRITERIA: 2013 CA BUILDING CODE (2013 CBC)
2. LOADS:
   - ROOF LIVE LOADS: 20 PSF (REDUCTIONS TAKEN AS ALLOWED BY BUILDING CODE)
   - FLOOR LIVE LOADS:
     - LIGHT MANUFACTURING: 125 PSF OR 2,000 LB CONCENTRATED LOAD
   - WIND LOADS:
   - MAIN FORCE RESISTING SYSTEM:
     - BASIC WIND SPEED: V = 115 MPH
     - RISK CATEGORY: IV (ESSENTIAL FACILITY)
     - EXPOSURE CATEGORY: C
     - INTERNAL PRESSURE COEFFICIENT: ±0.18
   - COMPONENTS AND CLADDING WIND PRESSURES: (PRESSURES ARE BASED ON AN EFFECTIVE WIND AREA OF 10 SQ FT OR LESS - REDUCTIONS MAY BE TAKEN AS ALLOWED BY BUILDING CODE)
   - SEISMIC LOADS:
     - SEISMIC IMPORTANCE FACTOR: I_E = 1.50
     - MAPPED SPECTRAL RESPONSE ACCELERATIONS:
       S_S = 1.50 g S_1 = 0.60 g
     - SOIL SITE CLASS: C
     - SPECTRAL RESPONSE COEFFICIENTS:
       S_{DS} = 1.00 g S_{D1} = 0.52 g
     - SEISMIC DESIGN CATEGORY: D
     - ANALYSIS PROCEDURE USED:
       EQUIVALENT LATERAL FORCE PROCEDURE
3. REFERENCE TO CODES, RULES, REGULATIONS, STANDARDS, MANUFACTURER'S INSTRUCTIONS OR REQUIREMENTS OF REGULATORY AGENCIES IS TO THE LATEST PRINTED EDITION OF EACH IN EFFECT AT THE DATE OF SUBMISSION OF BID UNLESS THE DOCUMENT DATE IS SHOWN.
4. THESE DRAWINGS INDICATE GENERAL AND TYPICAL DETAILS OF CONSTRUCTION. WHERE CONDITIONS ARE NOT SPECIFICALLY INDICATED BUT ARE OF SIMILAR CHARACTER TO DETAILS SHOWN, USE SIMILAR DETAILS OF CONSTRUCTION, SUBJECT TO REVIEW BY THE OWNER'S REPRESENTATIVE.
5. THE CONTRACTOR IS RESPONSIBLE FOR COORDINATING THE WORK OF ALL TRADES AND FOR CHECKING DIMENSIONS. NOTIFY THE OWNER'S REPRESENTATIVE OF ANY DISCREPANCIES AND RESOLVE BEFORE PROCEEDING WITH THE WORK.
6. DO NOT SCALE THE DRAWINGS.
7. PROVIDE MEASURES NECESSARY TO PROTECT THE STRUCTURE DURING CONSTRUCTION. SUCH MEASURES INCLUDE, BUT MAY NOT BE LIMITED TO, BRACING AND SHORING FOR LOADS DURING CONSTRUCTION. RETAIN A REGISTERED CIVIL ENGINEER WHOM IS PROPERLY QUALIFIED TO DESIGN BRACING, SHORING, ETC. VISITS TO THE SITE BY THE OWNER'S REPRESENTATIVE WILL NOT INCLUDE OBSERVATION OF THE ABOVE NOTED ITEMS.
8. INFORMATION SHOWN ON THE DRAWINGS RELATED TO EXISTING CONDITIONS REPRESENTS THE PRESENT KNOWLEDGE, BUT WITHOUT GUARANTEE OF ACCURACY. REPORT CONDITIONS THAT CONFLICT WITH THE CONTRACT DOCUMENTS TO THE OWNER'S REPRESENTATIVE. DO NOT DEVIATE FROM THE CONTRACT DOCUMENTS WITHOUT WRITTEN DIRECTION FROM THE OWNER'S REPRESENTATIVE.
9. REFER TO ARCHITECTURAL DRAWINGS FOR SIZE AND LOCATION OF FLOOR, ROOF AND WALL OPENINGS NOT SHOWN ON THE STRUCTURAL DRAWINGS. COORDINATE THE SIZE AND LOCATION OF OPENINGS ASSOCIATED WITH, BUT NOT LIMITED TO, ELECTRICAL, MECHANICAL AND PLUMBING TRADES. SUBMIT FINAL SIZING AND LOCATION REQUIREMENTS OF OPENINGS TO THE OWNER'S REPRESENTATIVE FOR REVIEW.
10. THE CONTRACTOR IS SOLELY RESPONSIBLE FOR PROVIDING A SAFE PLACE TO WORK AND MEETING THE REQUIREMENTS OF ALL APPLICABLE JURISDICTIONS. EXECUTE WORK TO ENSURE THE SAFETY OF PERSONS AND ADJACENT PROPERTY AGAINST DAMAGE BY FALLING DEBRIS AND OTHER HAZARDS IN CONNECTION WITH THIS WORK.
11. UNLESS NOTED OTHERWISE, REFER TO DRAWINGS OTHER THAN STRUCTURAL FOR FINISHES, SLOPES, DEPRESSIONS, OPENINGS, CURBS, STAIRS, RAMPS, TRENCHES, EQUIPMENT AND LOCATIONS AND EXTENT OF SUCH CONDITIONS.
12. CONTRACTOR TO COORDINATE ALL NEW WORK WITH EXISTING SITE CONDITIONS AND REPORT ANY DISCREPANCIES TO THE ENGINEER PRIOR TO CONSTRUCTION.
13. DETAILS OR CONDITIONS NOT FULLY DEVELOPED ON STRUCTURAL DOCUMENTS ARE SIMILAR TO DEVELOPED DETAILS.
14. SEE ARCHITECTURAL AND MECHANICAL DRAWINGS FOR WATERPROOFING, DAMP-PROOFING, AND DRAINAGE REQUIREMENTS.
15. REFER TO GEOTECHNICAL REPORT FOR SITE CONDITIONS, EXCAVATION, SHORING REQUIREMENTS, UNDERPINNING, BACKFILL BEHIND WALLS AND SUBDRAINAGE PREPARATIONS.
16. ALL BUILDING FOUNDATION PLANS, FLOOR PLANS AND ROOF PLANS TO BE COORDINATED WITH GENERAL NOTES AND TYPICAL DETAILS AS APPLICABLE.

CONCRETE

1. ALL CONCRETE SHALL BE NORMAL WEIGHT, WITH A MINIMUM COMPRESSIVE STRENGTH OF 4000 PSI AT 28 DAYS.
2. ALL CONCRETE DIMENSIONS SHOWN ARE MINIMUM DIMENSIONS. CONTRACTOR TO REVIEW FORMING, REINFORCING DETAILS AND ANY EMBEDDED ITEMS AND DETERMINE PRIOR TO FABRICATION OF ANY REINFORCING, PLACEMENT REQUIREMENTS AND CLEARANCES.
3. CONCRETE IS REINFORCED AND CAST-IN-PLACE UNLESS OTHERWISE NOTED. WHERE REINFORCING IS NOT SPECIFICALLY SHOWN OR WHERE DETAILS ARE NOT GIVEN, PROVIDE REINFORCING SIMILAR TO THAT SHOWN FOR SIMILAR CONDITIONS, SUBJECT TO REVIEW BY THE OWNER'S REPRESENTATIVE.
4. ROUGHEN CONCRETE SURFACES OF CONSTRUCTION JOINTS TO ¼ INCH AMPLITUDE AND CLEAN OF LAITANCE, FOREIGN MATTER, AND LOOSE PARTICLES. LOCATE CONSTRUCTION JOINTS AS SHOWN ON THE DRAWINGS. SUBMIT ALTERNATE JOINT LOCATIONS OR JOINTS NOT SHOWN TO THE OWNER'S REPRESENTATIVE FOR REVIEW AND APPROVAL PRIOR TO PROCEEDING WITH THE WORK.
5. AT LOCATIONS WHERE CONCRETE IS CAST AGAINST EXISTING CONCRETE, ROUGHEN CONTACT SURFACES TO ¼ INCH AMPLITUDE AND CLEAN OF LAITANCE, FOREIGN MATTER, AND LOOSE PARTICLES.
6. CONCRETE CLEAR COVER TO REINFORCING BARS IS AS FOLLOWS, UNLESS OTHERWISE NOTED:

LOCATION	CLEAR COVER
CONCRETE PLACED AGAINST EARTH	3 INCHES
FORMED SURFACES EXPOSED TO WEATHER OR IN CONTACT WITH EARTH:	
#6 BARS AND LARGER	2 INCHES
#5 BARS AND SMALLER	1 ½ INCHES
SLABS ON GRADE (TOP CLEARANCE)	1 ½ INCHES
BEAMS, GIRDERS AND COLUMNS NOT EXPOSED TO WEATHER OR EARTH	1 ½ INCHES
WALL OR SLAB SURFACES NOT EXPOSED TO WEATHER OR EARTH	
#5 & SMALLER	¾ INCH
#6 & #7	1 INCH
#8, #9, #10 & #11	1 ½ INCHES
#14 & #18	2 ½ INCHES

7. NON-SHRINK GROUT, 7000 PSI: EUCLID CHEMICAL COMPANY'S "EUCO-NS", L&M CRYSTEX, MASTER BUILDERS' "MASTERFLOW 713", OR FIVE STAR GROUT. WHERE HIGH FLUIDITY OR INCREASED PLACING TIME IS REQUIRED, USE EUCLID CHEMICAL COMPANY'S "EUCO HI -FLOW GROUT", MASTER BUILDERS' "MASTERFLOW 928", OR APPROVED EQUAL.

FORMWORK

1. PROVIDE POUR POCKETS IN FORMS AND UNDER EXISTING STRUCTURAL MEMBERS AS REQUIRED TO PREVENT AIR POCKETS AND/OR "HONEYCOMB" UNDER OR AROUND THE EXISTING MEMBERS. CONCRETE CAST WITH AIR POCKETS AND/OR "HONEYCOMB" UNDER OR AROUND THE MEMBERS IS NOT ACCEPTABLE.
2. REMOVE FORMS AND SHORES IN ACCORDANCE WITH THE FOLLOWING:

LOCATION	REMOVE FORMS AND SHORES NO SOONER THAN
COLUMNS AND WALLS	72 HOURS
FOOTINGS, PILE CAPS, AND GRADE BEAMS	48 HOURS

3. PROVIDE CURING WHERE FORMS ARE REMOVED IN LESS THAN 7 DAYS INCLUDING, BUT NOT LIMITED TO, WALLS, COLUMNS, AND UNDERSIDE OF ELEVATED SLABS.

SPECIAL INSPECTION

1. SPECIAL INSPECTION IN ACCORDANCE WITH 2013 CALIFORNIA BUILDING CODE CHAPTER 17 IS REQUIRED ON THE FOLLOWING PORTIONS OF THE WORK:
   - CONCRETE
   - REINFORCING STEEL
   - STRUCTURAL STEEL
   - SOIL

   (REFER TO THE STATEMENT OF SPECIAL INSPECTIONS FOR MORE SPECIFIC REQUIREMENTS)

REINFORCING STEEL

1. ALL CONCRETE REINFORCING SHALL BE ASTM A615, Fy = 60 KSI.
2. REINFORCING SHALL EXTEND CONTINUOUS FOR THE DIMENSION SHOWN.
3. NO WELDING OF ANY REINFORCING IS PERMITTED.
4. LOCATE ALL REINFORCING AS SHOWN ON DRAWINGS AND FASTEN SECURELY.
5. ALL REINFORCING TO TERMINATE WITH STANDARD HOOKS AS SHOWN ON PLANS. ALL STIRRUPS AND TIES TO BE CLOSED WITH 135 DEGREE BENDS.
6. ACCURATELY POSITION, SUPPORT, AND SECURE REINFORCEMENT FROM DISPLACING DUE TO FORMWORK, CONSTRUCTION, OR CONCRETE PLACEMENT OPERATIONS. LOCATE AND SUPPORT REINFORCING BY METAL CHAIRS, RUNNERS, BOLSTERS, SPACERS, AND HANGERS AT A MAXIMUM 3 -FOOT SPACING.
7. MECHANICAL COUPLERS: LENTON THREADED OR INTERLOCK COUPLERS BY ERI CO, I CBO #3967, CADWELD BY ERICO, I CBO #3967, OR XTENDER BY HEADED REINFORCEMENT CORPORATION, ICBO #5309 . COUPLERS FOR BEAM AND SLAB BARS AT FORMED CONSTRUCTION JOINTS MAY BE LENTON FORM SAVERS BY ERICO, ICBO #3967.
8. WELD REINFORCING STEEL IN ACCORDANCE WITH AWS D1.4 USING QUALIFIED WELDERS.

FOUNDATIONS

1. REFERENCE "GEOTECHNICAL MEMORANDUM NORTHSIDE TANKS PIPING RECONFIGURATION" BY CORNERSTONE EARTH GROUP, DATED MAY 15, 2013, PROJECT NO 138-3-1.
2. GEOTECHNICAL REPORT IS PROVIDED FOR INFORMATIONAL PURPOSES ONLY. CONTRACTOR SHALL PREPARE SITE AND PROVIDE FILL IN ACCORDANCE WITH ALL RECOMMENDATIONS CONTAINED WITHIN THE GEOTECHNICAL REPORT.
3. CONTRACTOR'S GEOTECHNICAL ENGINEER TO BE PRESENT TO OBSERVE SITE PREPARATION AND EXCAVATION AS WELL AS FILL EXCAVATION AND RE-COMPACTION AS RECOMMENDED IN THE GEOTECHNICAL REPORT.
4. PROVIDE SITE DE-WATERING AS NECESSARY TO ACHIEVE THE WORK. WATER SHALL BE TESTED PRIOR TO DISPOSAL PER SPECIFICATIONS SECTION 02 12 00.
5. LOCATE AND PROTECT EXISTING UTILITIES TO REMAIN DURING AND/OR AFTER CONSTRUCTION.
6. REMOVE ABANDONED FOOTINGS, UTILITIES, ETC. WHICH INTERFERE WITH NEW CONSTRUCTION, UNLESS OTHERWISE INDICATED.
7. NOTIFY THE OWNER'S REPRESENTATIVE IF ANY BURIED STRUCTURES NOT INDICATED, SUCH AS UTILITY LINES, FOUNDATIONS, ETC., ARE FOUND.
8. THE CONTRACTOR IS SOLELY RESPONSIBLE FOR EXCAVATION PROCEDURES INCLUDING LAGGING, SHORING, UNDERPINNING AND PROTECTION OF EXISTING CONSTRUCTION.
9. REMOVE LOOSE SOIL AND STANDING WATER FROM FOUNDATION EXCAVATIONS PRIOR TO PLACING CONCRETE.
10. EXCAVATIONS FOR FOUNDATIONS MUST BE ACCEPTED BY THE OWNER'S REPRESENTATIVE PRIOR TO PLACING REINFORCING AND CONCRETE. NOTIFY THE OWNER'S REPRESENTATIVE WHEN EXCAVATIONS ARE READY FOR INSPECTION.

LIGHT GAUGE STEEL

1. CONTRACTOR'S ENGINEER TO DESIGN ALL EXTERIOR METAL STUD FRAMING. PROVIDE DETAILS AND CALCULATIONS FOR ALL UNIQUE CONDITIONS. SUBMIT CALCULATIONS AND DRAWINGS PREPARED BY A CALIFORNIA PROFESSIONAL ENGINEER FOR REVIEW PRIOR TO FABRICATION. THE CONTRACTOR SHALL PROVIDE COLD-FORMED STEEL MEMBERS (STUDS,JOISTS, ACCESSORIES AND CONNECTIONS) DESIGNED IN ACCORDANCE WITH 2013 CA BUILDING CODE AND SHALL INCLUDE THE FOLLOWING PARAMETERS:
   - A. FRAMING SYSTEMS SHALL BE DESIGNED AND DETAILED TO RESIST GRAVITY AND LATERAL LOADS AS REQUIRED BY CODE. HEADERS, JAMBS AND SILLS AT OPENINGS SHALL BE DESIGNED TO ACCOMMODATE THE EFFECTS OF GRAVITY AND LATERAL LOADS.
   - B. OUT-OF-PLANE DEFLECTIONS SHALL BE LIMITED TO L / 360 AT METAL PANEL AND CURTAIN WALL LOCATIONS AND AS NOTED IN SPECIFICATIONS.
   - C. DEFLECTION OF FRAMING SHALL BE ACCOMMODATED WITH DEVICES CAPABLE OF ALLOWING 3/4" OF DEFLECTION AT DESIGN LIVE LOAD AND AS NOTED IN SPECIFICATIONS.
   - D. ALL LIGHT GAUGE STEEL STUDS SHALL BE 16 GAUGE MINIMUM.

STEEL

1. DETAIL, FABRICATE, AND ERECT STRUCTURAL STEEL IN ACCORDANCE WITH THE AMERICAN INSTITUTE OF STEEL CONSTRUCTION SPECIFICATION FOR STRUCTURAL STEEL BUILDINGS (LATEST EDITION AND SUPPLEMENTS).
2. ANCHOR BOLTS: ASTM F1554 GRADE 55.
3. ALL STEEL BARS & PLATES SHALL BE ASTM A36 UNLESS OTHERWISE NOTED.
4. ALL STEEL SHAPES SHALL BE ASTM A992 GRADE 50 UNLESS OTHERWISE NOTED.
5. ALL TUBES SHALL BE ASTM A500 GRADE B.
6. ALL PIPES TO BE ASTM A53 GRADE B.
7. ALL THREADED RODS: ASTM F1554 GRADE 55.
8. BOLTED CONNECTIONS, UNLESS NOTED OTHERWISE: 1-INCH DIAMETER A325-N BOLTS.
9. INSTALL HIGH STRENGTH BOLTS IN ACCORDANCE WITH SECTION 8 OF THE "SPECIFICATIONS FOR STRUCTURAL JOINTS USING ASTM A325 OR A490 BOLTS", 2004 EDITION.
10. PROVIDE BEVELED WASHERS ON ALL CONNECTION TO SLOPING FLANGES OF W SECTIONS AND CHANNELS WHERE SLOPE EXCEEDS 1:20.
11. ANCHOR RODS SHALL BE THREADED ANCHOR RODS WITH NUT. THE EMBEDDED NUT SHALL BE TACK WELDED TO THE ANCHOR ROD TO PREVENT ROTATION DURING TIGHTENING.
12. BOLT HOLES IN STEEL SHALL BE "STANDARD" (1/16-INCH LARGER IN DIAMETER THAN THE NOMINAL BOLT SIZE), UNLESS OTHERWISE NOTED.
13. WELDING ELECTRODES (FILLER METAL): E70XX (70 KSI), WITH EXACT FILLER METAL SELECTED BY THE FABRICATOR.
14. WELD LENGTHS CALLED FOR ON THE PLANS ARE THE NET EFFECTIVE LENGTH REQUIRED. WHERE LENGTH OF WELD IS NOT SHOWN IT SHALL BE THE FULL LENGTH OF THE JOINT.
15. COMPLETE PENETRATION WELDS SHALL BE MADE WITH PROPER BACKING WHEREVER POSSIBLE. FULL PENETRATION WELDS MADE WITHOUT PROPER BACKING SHALL HAVE THE ROOT GOUGED BEFORE WELDING IS STARTED FROM THE OTHER SIDE EXCEPT AS PROVIDED IN AWS D1.1.
16. ALL BUTT AND GROOVE WELDS SHALL BE FULL PENETRATION, UNLESS NOTED OTHERWISE.
17. ALL SPLICING OF MEMBERS SHALL BE AS SHOWN ON THE DRAWINGS. ANY SPLICING OF THE STEEL MEMBERS PROPOSED BY THE STEEL FABRICATOR SHALL BE SHOWN ON SHOP DRAWINGS AND APPROVED BY THE ENGINEER PRIOR TO FABRICATION.
18. ALL STEEL FABRICATION SHALL BE PERFORMED BY A FABRICATOR APPROVED BY THE BUILDING DEPARTMENT.
19. ALL ANCHOR BOLTS SHALL BE EMBEDDED AS SHOWN ON THE DRAWINGS.
20. MINIMUM PLATE THICKNESS: 3/8 INCH UNLESS OTHERWISE NOTED. MINIMUM WELD:1/4" UNLESS OTHERWISE NOTED.
21. ALL STEEL FABRICATION AND DETAILS TO COMPLY WITH MOST STRINGENT OF: AISC CODE, AWS CODE, AND THE 2013 CBC.
22. ALL WELDING TO BE BY AWS CERTIFIED WELDERS AND SHALL CONFORM TO ALL 2013 CBC AND AWS REQUIREMENTS. ALL WELDERS SHALL BE PRE-QUALIFIED BY THE PROJECT WELDING INSPECTOR FOR THE WELD TYPES AND POSITIONS USED IN THE PROCEDURES THEY WILL BE PERFORMING.
23. UNLESS NOTED OTHERWISE, ALL STEEL EXPOSED TO WEATHER SHALL BE HOT DIP GALVANIZED.

ADHESIVE ANCHORS AND DOWELS

1. FOR ANCHORS AND DOWELS INSTALLED INTO CONCRETE AND GROUT-FILLED MASONRY UNITS USE MATERIALS AS INDICATED IN THE DETAILS. WHERE EMBEDMENT DEPTHS ARE NOT SHOWN IN THE DETAILS USE THE FOLLOWING: THE TESTING LABORATORY WILL PERFORM TENSION TESTS ON 25% OF ANCHORS AND DOWELS TO THE FOLLOWING TEST LOADS:

ROD DIA OR BAR SIZE	EMBEDMENT	TEST LOAD	BASE MATERIAL
3/8"	4"	1800#	CONCRETE
½"	5"	3200#	CONCRETE
5/8"	6"	5000#	CONCRETE
¾"	7"	7100#	CONCRETE
7/8"	9"	9700#	CONCRETE
1"	11"	12800#	CONCRETE
#3	5"	3000#	CONCRETE
#4	6-1/2"	5400#	CONCRETE
#5	8"	8400#	CONCRETE
#6	10"	11900#	CONCRETE
#7	12"	16200#	CONCRETE
#8	14"	21300#	CONCRETE
3/8"	3-1/2"	3100#	MASONRY
½"	4-1/4"	3600#	MASONRY
5/8"	5"	4500#	MASONRY
¾"	6-5/8"	7500#	MASONRY

2. ANCHORS: ASTM F1554 THREADED RODS WITH ASTM A 563 GRADE A NUTS AND ANSI B18.22. 1 TYPE A WASHERS, UNLESS OTHERWISE NOTED. ANCHORS DESIGNATED AS ASTM A193 GRADE B7 THREADED RODS TO USE ASTM A563 GRADE DH HEAVY HEX NUTS AND ASTM F436 WASHERS.
3. DOWELS: ASTM A615 GRADE 60 REINFORCING STEEL.
4. REMOVE GREASE, OIL, RUST, AND OTHER LAITANCE FROM RODS AND DOWELS PRIOR TO INSTALLATION.
5. REPLACE ANCHORS AND DOWELS THAT FAIL DURING TESTING AND RETEST. IF MORE THAN 10% OF THE TESTED DOWELS AND ANCHORS FAIL TO ACHIEVE THE SPECIFIED TEST LOAD, TEST 100% OF THE DOWELS AND ANCHORS INSTALLED IN THE LAST 2 DAYS OF ANCHOR INSTALLATION.
6. INSTALL ADHESIVE ANCHORS PER THE MANUFACTURER'S INSTRUCTIONS.
7. IF REINFORCEMENT IS ENCOUNTERED DURING DRILLING, ABANDON AND SHIFT THE HOLE LOCATION TO AVOID THE REINFORCEMENT. PROVIDE A MINIMUM OF 2 ANCHOR DIAMETERS OR 1 INCH, WHICHEVER IS LARGER, OF SOUND CONCRETE BETWEEN THE DOWEL AND THE ABANDONED HOLE. FILL THE ABANDONED HOLE WITH NON-SHRINK GROUT. IF THE ANCHOR OR DOWEL MAY NOT BE SHIFTED AS NOTED ABOVE, THE ENGINEER WILL DETERMINE A NEW LOCATION.
8. LOCATE REINFORCEMENT AND CONFIRM FINAL ANCHOR LOCATIONS PRIOR TO FABRICATING PLATES, MEMBERS, OR OTHER STEEL ASSEMBLIES ATTACHED WITH ADHESIVE ANCHORS.

GHD Inc.
1735 North First Street Suite 301 San Jose California 95112 USA
T 1 408 451 9615 F 1 408 451 9665
W www.ghd.com

DATE	REVISION	BY

CITY OF SANTA CLARA
WATER & SEWER UTILITIES

NORTHSIDE TANKS SITE IMPROVEMENTS PROJECT
STRUCTURAL NOTES

APPROVED DATE
DIRECTOR OF WATER & SEWER UTILITIES

PROJ. NO.	592-1423-80300-7054-()30148		
DESIGNED BY	NK	DRAWN BY	CF
CHECKED BY	AC	YEAR	2014
DATE	JULY 2014	BLK. BK. PG.	94
DRAWING NO.	S003	SHT. 23 OF 49	
HORIZ. NOTED	VERT. –	DWG. NO.	W-3143-4

Plot Date: 24 June 2014 - 12:21 AM Plotted by: Ming Yee Cad File No: G:\11205 City of Santa Clara\8410306 Northside Tanks Piping Reconfig\06-CAD\Sheets\8410306 S003.dwg

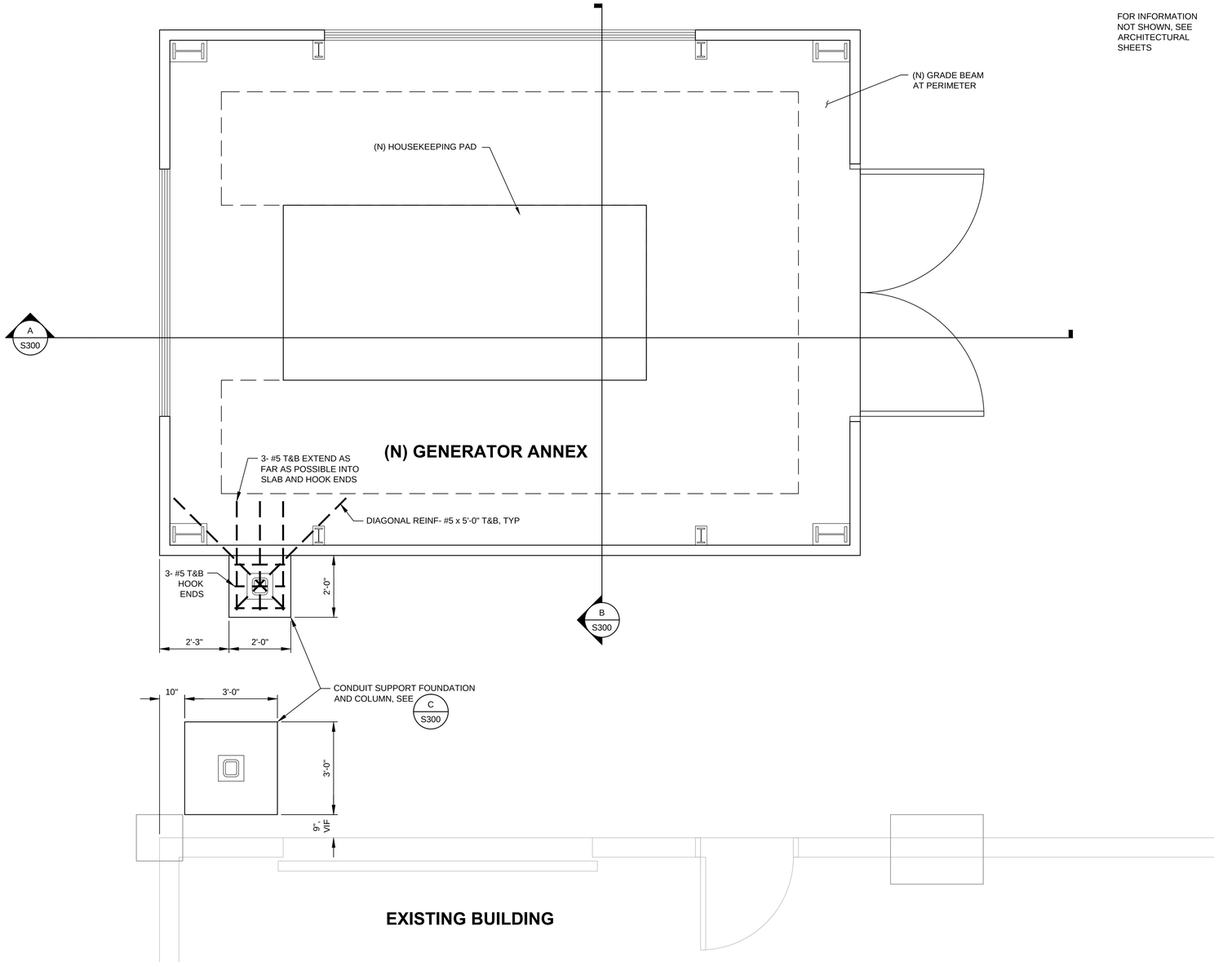

1 S100 **BUILDING FOUNDATION PLAN**

1"=2' 0 2' 4'

SITE NORTH

6/27/14	GHD Inc. 1735 North First Street Suite 301 San Jose California 95112 USA T 1 408 451 9615 F 1 408 451 9665 W www.ghd.com	DATE	REVISION	BY	CITY OF SANTA CLARA WATER & SEWER UTILITIES NORTHSIDE TANKS SITE IMPROVEMENTS PROJECT BUILDING FOUNDATION PLAN APPROVED DATE DIRECTOR OF WATER & SEWER UTILITIES

PROJ. NO.	592-1423-80300-7054-(I)30148		
DESIGNED BY	NK	DRAWN BY	CF
CHECKED BY	AC	YEAR	2014
DATE	JULY 2014	BLK. BK. PG.	94
DRAWING NO.	S100	SHT. 24	OF 49
HORIZ. NOTED	VERT. –	DWG. NO.	W-3143-4

Plot Date: 24 June 2014 - 12:25 AM Plotted by: Ming Yee Cad File No: G:\11205 City of Santa Clara\8410306 Northside Tanks Piping Reconfig\06-CAD\Sheets\8410306 S100.dwg

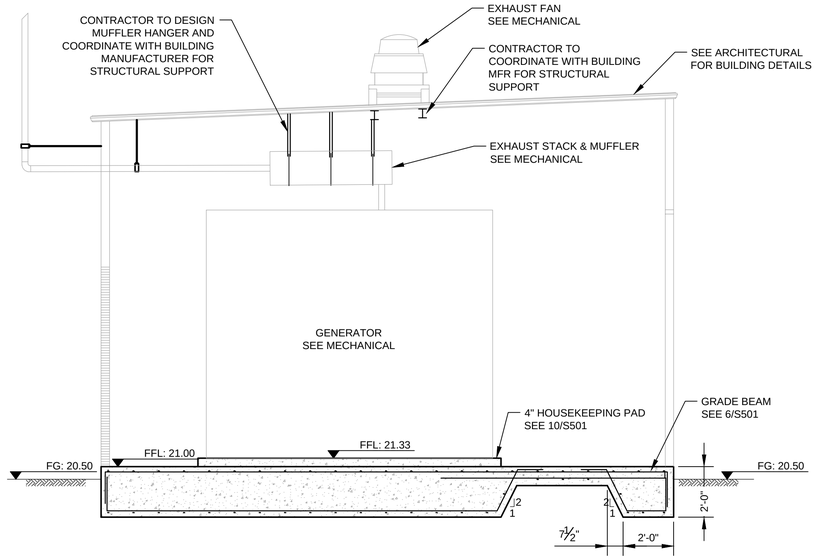

A NEW GENERATOR ANNEX SECTION

1"=3' 0 3' 6'

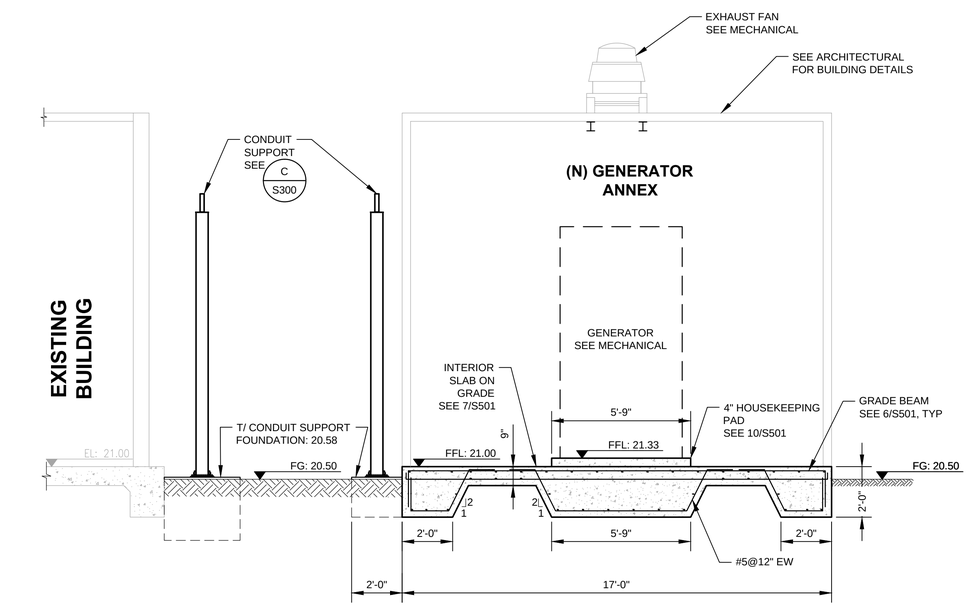

B NEW BUILDING SECTION

1"=3' 0 3' 6'

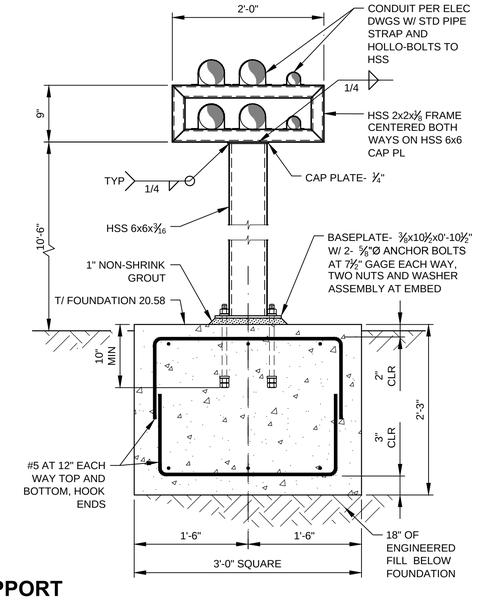

NOTES:

1. FOUNDATION AT EXISTING BUILDING SHOWN FOUNDATION AT NEW BUILDING SIMILAR SEE FOUNDATION PLAN

C CONDUIT SUPPORT

1"=1'-0" 0 1/2' 1' 2'

GHD Inc.
1735 North First Street Suite 301 San Jose California 95112 USA
T 1 408 451 9615 F 1 408 451 9665
W www.ghd.com

6/27/14

DATE	REVISION	BY

CITY OF SANTA CLARA
WATER & SEWER UTILITIES

NORTHSIDE TANKS SITE IMPROVEMENTS PROJECT
STRUCTURAL SECTIONS

APPROVED DATE
DIRECTOR OF WATER & SEWER UTILITIES

PROJ. NO.	592-1423-80300-7054-(I)30148		
DESIGNED BY	NK	DRAWN BY	CF
CHECKED BY	AC	YEAR	2014
DATE	JULY 2014	BLK. BK. PG.	94
DRAWING NO.	S300	SHT. 25	OF 49
HORIZ.	NOTED	VERT. –	DWG. NO. W-3143-4

Plot Date: 24 June 2014 - 12:22 AM Plotted by: Ming Yee Cad File No: G:\11205 City of Santa Clara\8410306 Northside Tanks Piping Reconfig\06-CAD\Sheets\8410306 S300.dwg

DEVELOPMENT LENGTH (ℓ_d)												
BAR SIZE	3000 PSI CONC (f'c)				4000 PSI CONC (f'c)				5000 PSI CONC (f'c)			
	TOP		OTHER		TOP		OTHER		TOP		OTHER	
	s ≥ 6"	s < 6"	s ≥ 6"	s < 6"	s ≥ 6"	s < 6"	s ≥ 6"	s < 6"	s ≥ 6"	s < 6"	s ≥ 6"	s < 6"
#3	13	22	12	17	12	19	12	15	12	17	12	13
#4	18	29	14	22	15	25	12	19	14	23	12	17
#5	22	36	17	28	19	31	15	24	17	28	13	22
#6	26	43	20	33	23	37	18	29	20	34	16	26
#7	38	63	29	48	33	54	25	42	29	49	23	38
#8	43	72	33	55	37	62	29	48	34	56	26	43
#9	49	81	37	62	42	70	33	54	38	63	29	48
#10	56	89	43	69	49	78	38	60	44	69	34	54
#11	68	98	52	76	59	85	45	66	53	76	41	59
TENSION LAP SPLICE LENGTH (CLASS 'B' SPLICE)												
BAR SIZE	3000 PSI CONC (f'c)				4000 PSI CONC (f'c)				5000 PSI CONC (f'c)			
	TOP		OTHER		TOP		OTHER		TOP		OTHER	
	s ≥ 6"	s < 6"	s ≥ 6"	s < 6"	s ≥ 6"	s < 6"	s ≥ 6"	s < 6"	s ≥ 6"	s < 6"	s ≥ 6"	s < 6"
#3	17	28	16	22	16	25	16	19	16	22	16	17
#4	23	38	18	29	20	33	16	25	18	29	16	23
#5	28	47	22	36	25	41	19	31	22	36	17	28
#6	34	56	26	43	29	49	23	38	26	44	20	34
#7	49	82	38	63	43	71	33	55	38	63	30	49
#8	56	93	43	72	49	81	38	62	44	72	34	56
#9	63	105	49	81	55	91	42	70	49	81	38	63
#10	73	116	56	90	63	101	49	78	57	90	44	70
#11	88	128	68	99	76	111	59	85	68	99	53	76

NOTES:

1. LENGTHS SHOWN ARE FOR GRADE 60 UNCOATED BARS.
2. LENGTHS SHOWN ARE IN INCHES.
3. INCREASE LENGTHS 30% FOR LIGHT WEIGHT CONCRETE
4. TOP BARS: HORIZONTAL BARS WITH MORE THAN 12" OF FRESH CONCRETE CAST BELOW THEM.
5. THE QUANTITY 'S' IS DEFINED AS FOLLOWS:

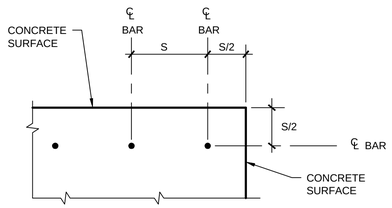

1 BAR DEVELOPMENT LENGTHS AND LAP SPLICE LENGTHS

SCALE: NOT TO SCALE

D= 6 d_b FOR #3 TO #8
8 d_b FOR #9, #10, #11
10 d_b FOR #14, #18

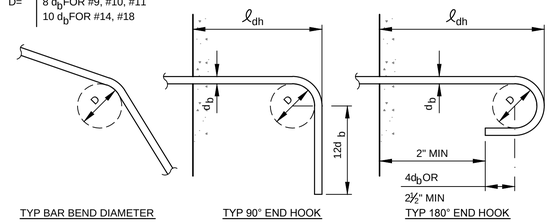

MINIMUM TENSION EMBEDMENT LENGTHS ℓ_{dh} (IN.) FOR STANDARD END HOOKS ON REINFORCING BARS				
BAR SIZE	NORMAL WEIGHT CONCRETE, f'c PSI			
	3000	4000	5000	6000
#3	6	6	6	6
#4	8	7	6	6
#5	10	9	8	7
#6	12	10	9	9
#7	14	12	11	10
#8	16	14	12	11
#9	18	15	14	13
#10	20	17	16	14
#11	22	19	17	16
#14	38	33	29	27
#18	50	43	39	35

2 BAR BENDS AND END HOOKS

SCALE: NOT TO SCALE

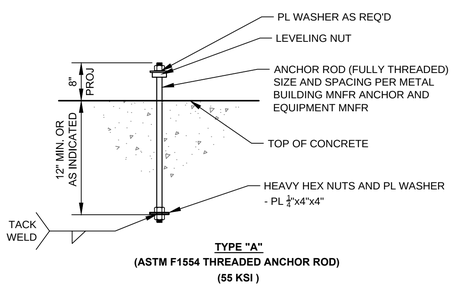

TYPE "A"
(ASTM F1554 THREADED ANCHOR ROD)
(55 KSI)

3 TYP CAST-IN-PLACE ANCHOR ROD DETAIL

SCALE: NOT TO SCALE

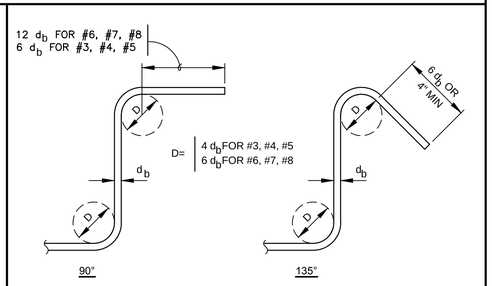

4 STIRRUP AND TIE HOOKS

SCALE: NOT TO SCALE

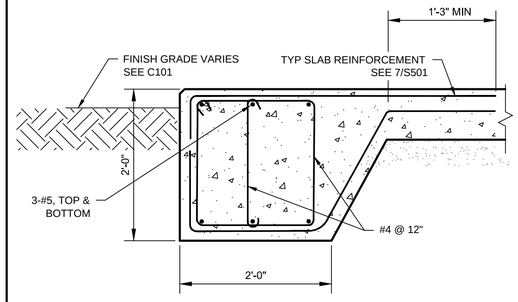

6 GRADE BEAM, TYP

SCALE: NOT TO SCALE

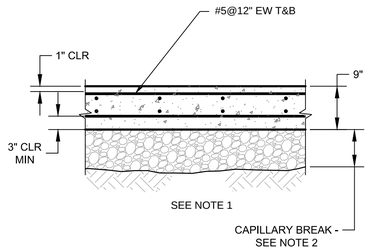

NOTES:

1. SUBGRADE PREPARATION - REMOVE AND REPLACE UPPER 3 FEET OF SUBGRADE BENEATH BOTTOM OF CAPILLARY BREAK AND 5 FEET LATERALLY BEYOND SLAB WITH NON-EXPANSIVE FILL MEETING REQUIREMENTS OF SOILS REPORT. COMPACT AND MOISTURE CONDITION SUBGRADE IN ACCORDANCE WITH SOILS REPORT.
2. 4" MIN COMPACTED, FREE-DRAINING CRUSHED ROCK CONFORMING TO THE REQUIREMENTS OF CALTRANS STANDARD SPECIFICATIONS FOR CLASS 1, TYPE A, PERMEABLE MATERIAL COMPACTED TO 95% RELATIVE COMPACTION IN ACCORDANCE WITH ASTM D1557

7 INTERIOR SLAB ON GRADE

SCALE: NOT TO SCALE

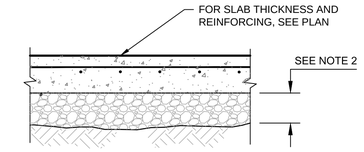

SINGLE MAT

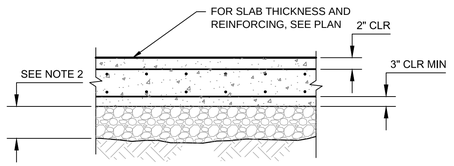

DOUBLE MAT

NOTES:

1. SUBGRADE PREPARATION - REMOVE AND REPLACE UPPER 24 INCHES OF SUBGRADE BENEATH BOTTOM OF AGGREGATE BASE LAYER AND 3 FEET LATERALLY BEYOND SLAB WITH NON-EXPANSIVE FILL MEETING REQUIREMENTS OF SOILS REPORT. COMPACT AND MOISTURE CONDITION SUBGRADE IN ACCORDANCE WITH SOILS REPORT.
2. 6" MIN OF CALTRANS CLASS 1 PERMEABLE MATERIAL TYPE "A" COMPACTED TO AT LEAST 95% RELATIVE COMPACTION IN ACCORDANCE WITH ASTM D 1557.

8 EXTERIOR SLAB ON GRADE

SCALE: NOT TO SCALE

CONSTRUCTION JOINT

CONTRACTION JOINT

NOTES:

1. SAWCUT JOINTS WITHIN 12 HOURS AFTER PLACING CONCRETE
2. REMOVE VOID FORM AFTER PLACING CONCRETE.
3. DEPRESS REINFORCEMENT IN VICINITY OF SAWCUT TO AVOID DAMAGING REINFORCEMENT

9 SLAB CONTROL JOINTS

SCALE: NOT TO SCALE

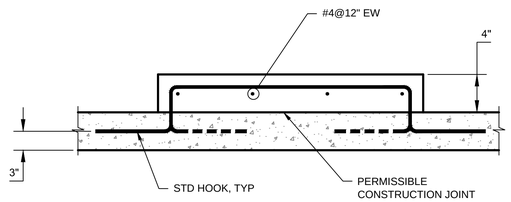

NOTE:
EXTEND HOUSE KEEPING PAD 4" BEYOND EDGE OF EQUIPMENT

10 HOUSEKEEPING PAD

SCALE: NOT TO SCALE

6/27/14

GHD Inc.
1735 North First Street Suite 301 San Jose California 95112 USA
T 1 408 451 9615 F 1 408 451 9665
W www.ghd.com

DATE	REVISION	BY

CITY OF SANTA CLARA
WATER & SEWER UTILITIES

NORTHSIDE TANKS SITE IMPROVEMENTS PROJECT
STRUCTURAL DETAILS 1

APPROVED DATE
DIRECTOR OF WATER & SEWER UTILITIES

PROJ. NO.	592-1423-80300-7054-(I)30148		
DESIGNED BY	NK	DRAWN BY	CF
CHECKED BY	AC	YEAR	2014
DATE	JULY 2014	BLK. BK. PG.	94
DRAWING NO.	S501	SHT. 26	OF 49
HORIZ. NOTED	VERT. –	DWG. NO.	W-3143-4

Plot Date: 24 June 2014 - 12:26 AM Plotted by: Ming Yee Cad File No: G:\11205 City of Santa Clara\8410306 Northside Tanks Piping Reconfig\06-CAD\Sheets\8410306 S501.dwg

ABBREVIATIONS

A	AMPERES, AREA
ABS	ACRYLONITRILE-BUTADIENE-STYRENE
AD	AREA DRAIN
AFF	ABOVE FINISHED FLOOR
AFG	ABOVE FINISHED GRADE
AG	ABOVE GRADE
APPROX	APPROXIMATE
AS	AIR SEPARATOR
AVG	AVERAGE
BD	BALANCE DAMPER
BDD	BACK DRAFT DAMPER
BFP	BACK FLOW PREVENTER
BG	BELOW GRADE
BHP	BRAKE HORSEPOWER
BOD	BOTTOM OF DUCT
BTU	BRITISH THERMAL UNIT
BTUH	BRITISH THERMAL UNIT PER HOUR
C	CELSIUS
℄	CENTERLINE
CCW	COUNTER CLOCKWISE
CD	CEILING DIFFUSER, CONDENSATE DRAIN
CFM	CUBIC FEET PER MINUTE
CH	CHILLER
CHWP	CHILLED WATER PUMP
CHWR	CHILLED WATER RETURN
CHWS	CHILLED WATER SUPPLY
CI	CAST IRON
CMPR	COMPRESSOR
CONT	CONTINUED
CT	COOLING TOWER
CU	COPPER
CU FT	CUBIC FEET
CU IN	CUBIC INCHES
CW	COLD WATER, CLOCKWISE
CWP	CONDENSER WATER PUMP
CWR	CONDENSER WATER RETURN,
CWS	CONDENSER WATER SUPPLY
CWV	COMBINATION WASTE & VENT
D	DEPTH
DB	DECIBEL, DRY BULB
DEG	DEGREE(S)
DIA	DIAMETER
DN	DOWN
DPT	DIFFERENTIAL PRESSURE TRANSMITTER
DS	DOWN SPOUT
DW	DOMESTIC WATER
DWG	DRAWING
(E)	EXISTING
EA	EACH
EAT	ENTERING AIR TEMPERATURE
EF	EXHAUST FAN
EFF	EFFICIENCY
EG	EXHAUST GRILLE
ELEV	ELEVATION
ENT	ENTERING
ESP	EXTERNAL STATIC PRESSURE
EW	EYE WASH
F	FLOW
FACP	FIRE ALARM CONTROL PANEL
FC	FAN COIL
FCO	FLOOR CLEAN OUT
FD	FLOOR DRAIN, FIRE DAMPER
FDC	FIRE DEPARTMENT CONNECTION
FM	FLOW METER
FP	FIRE PROTECTION
FPI	FINS PER INCH
FPM	FEET PER MINUTE
FPS	FEET PER SECOND
FS	FLOW SWITCH
FSD	FIRE/SMOKE DAMPER
FSP	FIRE SPRINKLER
FT	FOOT, FEET
G	GAS
GA	GAUGE
GALV	GALVANIZED
GPD	GALLONS PER DAY
GPH	GALLONS PER HOUR
GPM	GALLONS PER MINUTE
GPS	GALLONS PER SECOND
HD	HEAD
HG	MERCURY
HWR	HEATING WATER RETURN
HWS	HEATING WATER SUPPLY
HP	HORSEPOWER, HEAT PUMP
HR	HOSE REEL, HOUR
HT	HEIGHT
HVAC	HEATING, VENTILATION &CONDITIONING
HW	HOT WATER
HWR	HOT WATER RETURN
HZ	FREQUENCY
ID	INSIDE DIAMETER
INVERT	INVERT ELEVATION
IW	INDIRECT WASTE
KW	KILOWATTS
KWH	KILOWATTS PER HOUR
L	LENGTH
LAT	LEAVING AIR TEMPERATURE
LBS	POUNDS
LF	LINEAR FEET
LPG	LIQUID PETROLEUM GAS
LTG	LIGHTING
LVG	LEAVING
LWT	LEAVING WATER TEMPERATURE
MAX	MAXIMUM
MBH	1,000 BTUH
MCC	MOTOR CONTROL CENTER
MD	MOTORIZED DAMPER
MFR	MANUFACTURER
MIN	MINIMUM, MINUTE
MTD	MOUNTED
MUA	MAKE UP AIR
(N)	NEW
NC	NORMALLY CLOSED, NOISE CRITERIA
NIC	NOT IN CONTRACT
NO	NORMALLY OPEN, NUMBER
NTS	NOT TO SCALE
OA	OUTSIDE AIR
OBD	OPPOSED BLADE DAMPER
OC	ON CENTER
OD	OUTSIDE DIAMETER
ORD	OVERFLOW ROOF DRAIN
PB	POLYBUTYLENE
PE	POLYETHYLENE
PPM	PARTS PER MILLION
PLC	PROGRAMMABLE LOGIC CONTROLLER
POC	POINT OF CONNECTION
PRV	PRESSURE DEDUCING VALVE
PSF	POUNDS PER SQUARE FOOT
PSI	POUNDS PER SQUARE INCH
PSIA	POUNDS PER SQUARE INCH, ABSOLUTE
PSIG	POUNDS PER SQUARE INCH, GAGE
PVC	POLYVINYL CHLORIDE
RA	RETURN AIR
RD	ROOF DRAIN
REQ	REQUIRED
RG	RETURN GRILLE
RH	RELATIVE HUMIDITY
RPM	REVOLUTIONS PER MINUTE
RPS	REVOLUTIONS PER SECOND
RW	RECYCLED WATER
SAD	SEE ARCHITECTURAL DRAWINGS
STD	STANDARD
SOV	SHUT OFF VALVE
SD	SUPPLY DIFFUSER, STORM DRAIN
SP	SPRINKLER
SS	SANITARY SEWER, STAINLESS STEEL
SV	SOLENOID VALVE
TD	TEMPERATURE DIFFERENTIAL
TEMP	TEMPERATURE
TOD	TOP OF DUCT
TP	TOTAL STATIC PRESSURE
TYP	TYPICAL
UON	UNLESS OTHERWISE NOTED
V	VENT, VOLT
VEL	VELOCITY
VFD	VARIABLE FREQUENCY DRIVE
VOL	VOLUME
VP	VELOCITY PRESSURE
VTR	VENT THROUGH ROOF
W	WIDTH
W/	WITH
WB	WET BULB
WG	WATER GAGE
W/O	WITHOUT
WRG	WALL RETURN GRILLE
WSR	WALL SUPPLY REGISTER
WH	WATER HEATER
WHA	WATER HAMMER ARRESTOR
XFMR	TRANSFORMER
YR	YEAR
Z	ZONE

MECHANICAL SYMBOLS LEGEND

HVAC

SYMBOL	DESCRIPTION
	DUCT SECTION, SUPPLY AIR UP
	DUCT SECTION, RETURN AIR UP
	DUCT SECTION, EXHAUST AIR UP
	DUCT SECTION, SUPPLY AIR DN
	DUCT SECTION, RETURN AIR DN
	DUCT SECTION, EXHAUST AIR DN
	FLEXIBLE DUCT
FSD	FIRE AND SMOKE DAMPER
FD	FIRE DAMPER
	DIRECTION OF FLOW
	MANUAL VOLUME DAMPER
	WALL SUPPLY OUTLET, RETURN GRILLE
	CEILING DIFFUSER
	CEILING RETURN
	CEILING EXHAUST
DD	DUCT SMOKE DETECTOR
T	THERMOSTAT
T	REMOTE SENSOR
CO2	CARBON DIOXIDE SENSOR
M	MOTORIZED ACTUATOR

PIPING

SYMBOL	DESCRIPTION
RW	RECYCLED WATER
DW	DOMESTIC WATER
CWS	CHILLED WATER SUPPLY
CWR	CHILLED WATER RETURN
HHWS	HEATING HOT WATER SUPPLY
HHWR	HEATING HOT WATER RETURN
CS	CONDENSER WATER SUPPLY
CR	CONDENSER WATER RETURN
RL	REFRIGERANT LIQUID
RS	REFRIGERANT SUCTION
AV	AUTOMATIC AIR VENT
	BLOW OFF STRAINER
	FILTER AND STRAINER LINE
P	PRESSURE GAGE
	PRESSURE GAGE AND COCK
	PRESSURE REDUCING VALVE
	RELIEF OR SAFETY VALVE
	STRAINER
	TEMPERATURE GAGE
	PUMP (PLAN)
	PUMP (SCHEMATIC)
	EXPANSION LOOP
	CAP
	CONCENTRIC REDUCER
	UNION
	THREE-WAY MANUAL VALVE
	BALL VALVE
	BUTTERFLY VALVE
	DIAPHRAGM VALVE
	GATE VALVE
	GLOBE VALVE
	CHECK VALVE
	POINT OF CONNECTION
	FLEXIBLE CONNECTOR
	THERMOMETER
	PETE'S PLUG

SHEET ANNOTATION

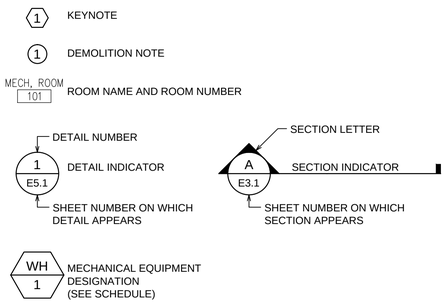

AIR TERMINAL IDENTIFICATION

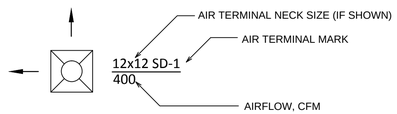

NOTE:
ARROWS INDICATE DIRECTION OF AIRFLOW
NO ARROWS INDICATE 4-WAY AIRFLOW

GENERAL MECHANICAL NOTES

1. THESE DRAWINGS ARE BASED UPON AVAILABLE DOCUMENTS, WHICH MAY NOT ACCURATELY PORTRAY EXISTING CONDITIONS. EXISTING EQUIPMENT AND PIPING SIZES, LOCATIONS, AND DIMENSIONS SHALL BE VERIFIED IN THE FIELD PRIOR TO DEMOLITION AND CONSTRUCTION. NOTIFY THE ENGINEER IMMEDIATELY OF ALL DISCREPANCIES AFFECTING THE REMOVAL OF EXISTING EQUIPMENT AND PIPING, AND THE INSTALLATION OF NEW EQUIPMENT AND PIPING.
2. INSTALL PIPING AND DUCTWORK TO BEST SUIT FIELD CONDITIONS AND COORDINATE WITH THE INSTALLATION WORK OF OTHER TRADES. THESE DRAWINGS ARE DIAGRAMMATIC, DO NOT SCALE TO DETERMINE EXACT LOCATION OF PIPING.
3. PROTECT ALL EXISTING EQUIPMENT THAT IS TO REMAIN. VERIFY WITH OWNER WHAT SYSTEMS WILL REMAIN OPERATIONAL THROUGHOUT CONSTRUCTION. NOTIFY THE OWNER PRIOR TO SHUTTING DOWN ANCILLARY SYSTEMS OR EQUIPMENT.
4. REPAIR AND/OR REPLACE ALL EXISTING UTILITIES, STRUCTURAL ELEMENTS, EQUIPMENT, PIPING, CONDUIT, DUCTWORK, ETC. THAT IS DAMAGED OR BECOMES INOPERABLE AS A RESULT OF THIS WORK.
5. COORDINATE MODIFICATIONS TO EXISTING SYSTEMS WITH OWNER TO MINIMIZE SHUTDOWN TIME OF BUILDING SYSTEMS.
6. FOR ALL MECHANICAL SYSTEMS CONTROLS, PROVIDE CONDUIT AND WIRING IN ACCORDANCE WITH ELECTRICAL SPECIFICATIONS AND MANUFACTURER'S REQUIREMENTS.

GHD Inc.
1735 North First Street Suite 301 San Jose California 95112 USA
T 1 408 451 9615 F 1 408 451 9665
W www.ghd.com

DATE	REVISION	BY

CITY OF SANTA CLARA
WATER & SEWER UTILITIES

NORTHSIDE TANKS SITE IMPROVEMENTS PROJECT
MECHANICAL LEGEND, SYMBOLS, & ABBREVIATIONS

APPROVED DATE
DIRECTOR OF WATER & SEWER UTILITIES

PROJ. NO.	592-1423-80300-7054-(I)30148		
DESIGNED BY	NK	DRAWN BY	CF
CHECKED BY	AC	YEAR	2014
DATE	JULY 2014	BLK. BK. PG.	94
DRAWING NO.	M001	SHT. 27	OF 49
HORIZ.	NOTED	VERT. –	DWG. NO. W-3143-4

Plot Date: 24 June 2014 - 12:25 AM Plotted by: Ming Yee Cad File No: G:\11205 City of Santa Clara\8410306 Northside Tanks Piping Reconfig\06-CAD\Sheets\8410306 M001.dwg

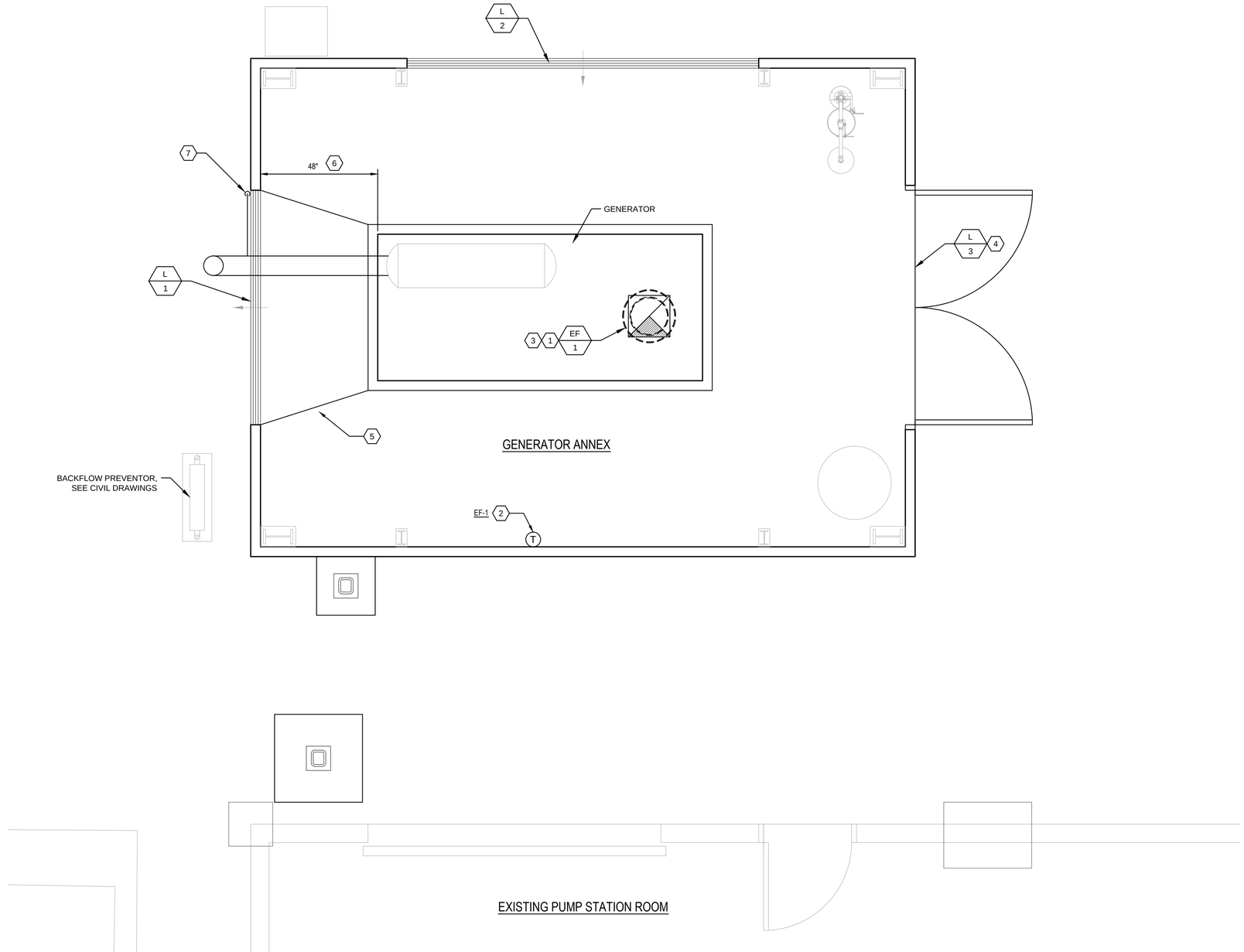

SHEET GENERAL NOTES

1. SEE SHEET M-501 FOR EQUIPMENT SCHEDULES.
2. SEE SHEET M-101 FOR PLUMBING PIPING WORK

KEYNOTES

1. MOUNT FAN ON CURB ON ROOF. COORDINATE LOCATION WITH BUILDING STRUCTURE.
2. MOUNT LINE VOLTAGE THERMOSTAT AT 48" ABOVE FINISHED FLOOR, SET AT 85°F (ADJUSTABLE) SEE DETAIL 3/M501.
3. 12½" x 12½" ROOF OPENING. TERMINATE EXHAUST DUCT 6" BELOW BOTTOM OF ROOF WITH INSECT SCREEN.
4. COORDINATE EXACT SIZE WITH DOOR FRAME CONSTRUCTION PER DOOR SCHEDULE, A601.
5. GENERATOR DISCHARGE DUCT TRANSITION, SEE DETAIL 1/M501. ACTUAL HEIGHT OF GENERATOR RADIATOR DEPENDS ON GENERATOR AND FUEL TANK INSTALLED.
6. DISTANCE BETWEEN CONNECTION TO LOUVER AND FACE OF GENERATOR RADIATOR.
7. ROUTE EXHAUST PIPE DRAIN DOWN AT WALL TO TERMINATE 6" ABOVE GRADE, SEE DETAIL 1/M501. ROUTE AROUND LOUVER ASSEMBLY.

1
M100
MECHANICAL HVAC PLAN

1/2"=1'-0" 0 1' 2' 4'

N PLAN NORTH

SITE NORTH

GHD Inc. 1735 North First Street, Suite 301
San Jose, California 95112 USA
T 1 408 451 9615 F 1 408 451 9665
W www.ghd.com E sanjose@ghd.com W www.ghd.com

6/27/14

DATE	REVISION	BY

CITY OF SANTA CLARA
WATER & SEWER UTILITIES

NORTHSIDE TANKS SITE IMPROVEMENTS PROJECT
MECHANICAL HVAC PLAN

APPROVED DATE

DIRECTOR OF WATER & SEWER UTILITIES

PROJ. NO.	592-1423-80300-7054-(I)30148		
DESIGNED BY	NK	DRAWN BY	CF
CHECKED BY	AC	YEAR	2014
DATE	JULY 2014	BLK. BK. PG.	94
DRAWING NO.	M100	SHT.	28 OF 49
HORIZ.	NOTED VERT. -	DWG. NO.	W-3143-4

Plot Date: 24 June 2014 - 12:20 AM Plotted by: Ming Yee Cad File No: G:\11205 City of Santa Clara\8410306 Northside Tanks Piping Reconfig\06-CAD\Sheets\8410306 M100.dwg

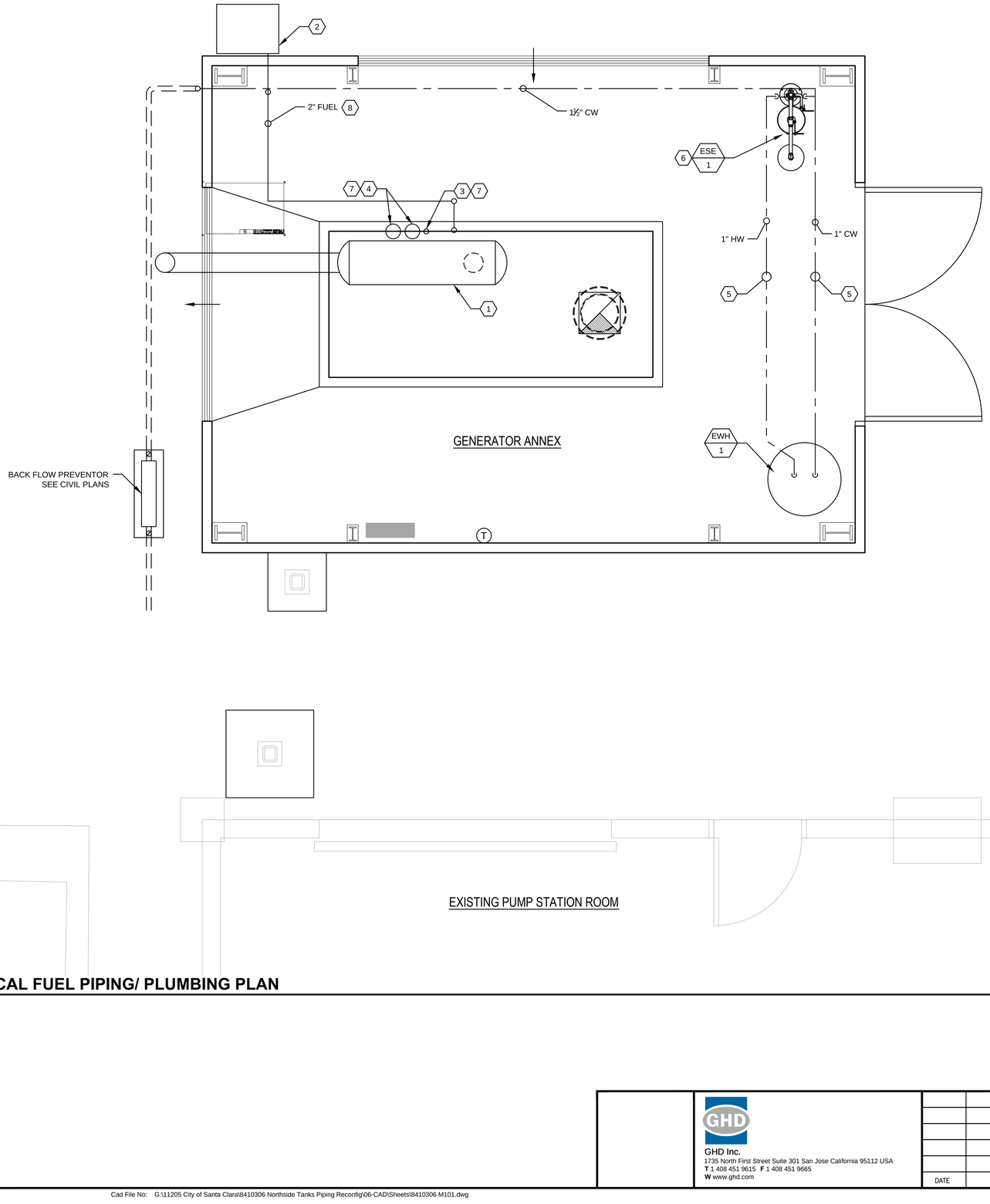

1 / M101 **MECHANICAL FUEL PIPING/ PLUMBING PLAN**

1/2"=1'-0" 0 1' 2' 4'

PLAN NORTH

SITE NORTH

SHEET GENERAL NOTES

1. SEE SHEET M-501 FOR EQUIPMENT SCHEDULES.
2. SEE SHEET M-100 FOR HVAC WORK

KEYNOTES

1. MOUNT MUFFLER A MINIMUM OF 9" FROM ROOF STRUCTURE (NON-COMBUSTIBLE) AND 18" FROM GENERATOR. INSULATE EXHAUST PIPE AND MUFFLER.
2. REMOTE FILL STATION: FRANKLIN FUELS MODEL RFBP-REAR. MOUNT BOTTOM AT 36" ABOVE GRADE. PROVIDE LEAK DETECTION IN SPILL CONTAINMENT.
3. 2" NORMAL VENT UP THROUGH ROOF AND TERMINATE A MINIMUM OF 12'-0" ABOVE GROUND LEVEL. INSTALL UL LISTED FLAME ARRESTOR ON VENT PIPE. INSTALL VENT VERTICALLY.
4. ROUTE 6" PRIMARY AND SECONDARY EMERGENCY VENTS UP THROUGH ROOF. CAP WITH PRESSURE RELIEF CAP FRANKLIN FUELS EBW803-205-1. TERMINATE A MINIMUM OF 12' ABOVE GRADE.
5. INSULATE HOT WATER PIPE. ROUTE PIPES MINIMUM 11'-0" AFF. CONTRACTOR TO DESIGN PIPE SUPPORT AND COORDINATE WITH BUILDING MANUFACTURER AND ELECTRICAL CONDUITS.
6. EMERGENCY SHOWER EYE WASH WITH THERMOSTATIC MIXING VALVE. INSTALL WITH REQUIRED CLEARANCES TO BUILDING STRUCTURE. MIXING VALVE SET AT 60F.
7. LOCATION OF VENTS ON TANK DEPENDS ON TANK MANUFACTURER. COORDINATE ACTUAL LOCATION WITH BUILDING STRUCTURE. PROVIDE ROOF JACK AND FLASH FOR WATER PROOF PENETRATION.
8. LOCATION OF FUEL CONNECTION DEPENDS ON TANK MANUFACTURER. COORDINATE ACTUAL LOCATION. PROVIDE DUAL WALL PIPING WITH LEAK DETECTION, ROUTE PIPE UP TO ABOVE 10'-0" AFF. CONTRACTOR TO DESIGN PIPE SUPPORT AND COORDINATE WITH BUILDING MANUFACTURER.

GHD Inc.
1735 North First Street Suite 301 San Jose California 95112 USA
T 1 408 451 9615 **F** 1 408 451 9665
W www.ghd.com

DATE	REVISION	BY

CITY OF SANTA CLARA
WATER & SEWER UTILITIES

NORTHSIDE TANKS SITE IMPROVEMENTS PROJECT
MECHANICAL FUEL PIPING/ PLUMBING PLAN

APPROVED DATE
DIRECTOR OF WATER & SEWER UTILITIES

PROJ. NO.	592-1423-80300-7054-(I)30148		
DESIGNED BY	NK	DRAWN BY	CF
CHECKED BY	AC	YEAR	2014
DATE	JULY 2014	BLK. BK. PG.	94
DRAWING NO.	M101	SHT. 29	OF 49
HORIZ.	NOTED	VERT. –	DWG. NO. W-3143-4

Plot Date: 24 June 2014 - 12:20 AM Plotted by: Ming Yee Cad File No: G:\11205 City of Santa Clara\8410306 Northside Tanks Piping Reconfig\06-CAD\Sheets\8410306 M101.dwg

KEYNOTES

1. INSTALL EXHAUST MUFFLER AND EXHAUST STACK OF CORRECT SIZE TO KEEP STATIC PRESSURE LOSS BELOW GENERATOR MANUFACTURER MAXIMUM. SLOPE EXHAUST PIPE TO DRAIN. ROUTE DRAIN TO DAYLIGHT. STACK HEIGHT TO BE 36" ABOVE HIGHEST PART OF ROOF STRUCTURE.
2. ALL PIPING AND SILENCER A MINIMUM OF 9 INCHES FROM ALL COMBUSTIBLE MATERIALS.

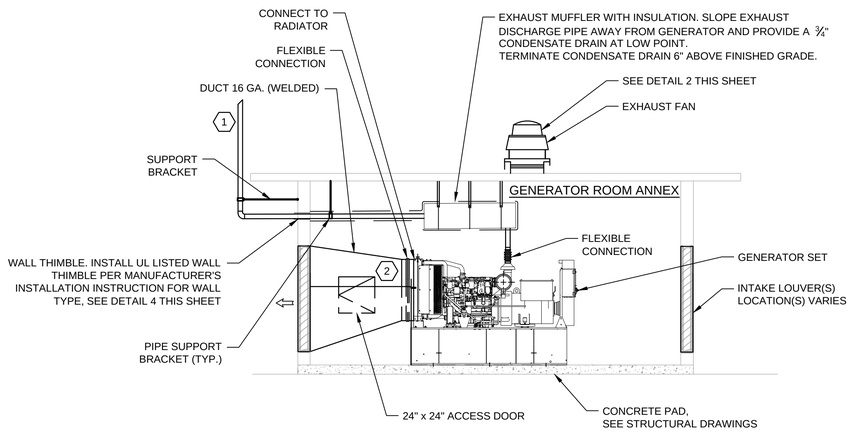

1 -- **GENERATOR ROOM SCHEMATIC**

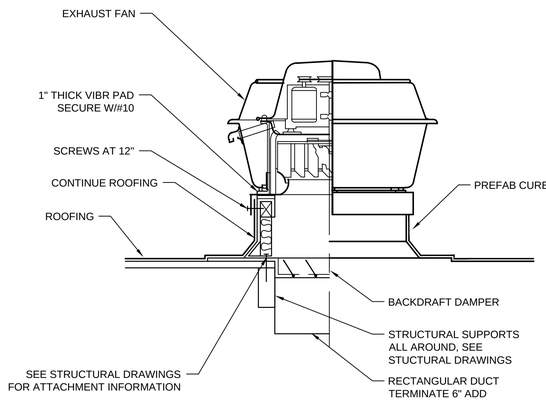

2 -- **EXHAUST FAN ON ROOF**

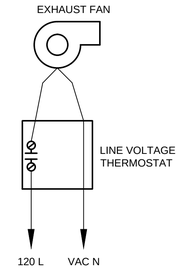

3 -- **EXHAUST FAN CONTROL**

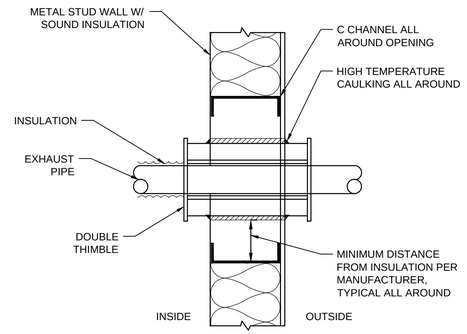

4 -- **EXHAUST THIMBLE WALL PENETRATION**

ELECTRIC WATER HEATER SCHEDULE

MARK	MANUFACTURER	MODEL	OUTPUT (MBH)	90F RECOVERY (GALLONS)	ELECTRICAL			EMPTY WEIGHT (LBS)	FULL WEIGHT (LBS)	SERVICE
					VOLTS	PHASE	Kw			
EWH-1	STATE	PCE 82 20RTA	20,400	27.0	208	1	2 @ 3.0	225	900	EMER. SHOWER/EYEWASH

EMERGENCY SHOWER/EYEWASH SCHEDULE

MARK	MANUFACTURER	MODEL	EYEWASH MIN. FLOW (GPM)	SHOWER MIN. FLOW (GPM)	SUPPLY CONNECTION (INCHES)	SERVICE
ESE-1	HAWS	8300	5.0	20.0	1.25	GENERATOR ROOM

ACCESSORIES:
1. MIXING VALVE RATED FOR RANGE OF FLOWS INDICATED

ROOFTOP EXHAUST FAN SCHEDULE

MARK	MANUFACTURER	MODEL	AIRFLOW (CFM)	EXT. STATIC PRESS. (IN W.G.)	ELECTRICAL			ACOUSTIC (SONES)	WEIGHT (LBS)	ACCESSORIES
					HP	VOLT	PHASE			
EF-1	GREENHECK	G-090-D-1/20	500	0.2	1/25	120	1	7.3	25	1,2,3,4,5

ACCESSORIES:
1. ROOF CURB
2. BACK DRAFT DAMPER
3. DISCONNECT SWITCH
4. BIRDSCREEN
5. SPEED CONTROLLER

LOUVER SCHEDULE

MARK	MANUFACTURER	MODEL	AIRFLOW (CFM)	SIZE (WxH) (IN x IN)	FREE AREA (SQ. FT.)	MAX. VELOCITY (FT/MIN)	MAX. PRESSURE DROP (IN W.G.)	REMARKS	SERVICE
L-1	RUSKIN	ACL645	25,500	96 X 96	19.9	1300	0.20	1,3	GENERATOR DISCHARGE
L-2	RUSKIN	ACL645	23,350	144 X 120	36.6	850	0.09	1,2,3	GENERATOR INTAKE
L-3	RUSKIN	ACL645	3,650	90 X 26	4.5	850	0.09	1,2,3	GENERATOR INTAKE

REMARKS:
1) COLOR AS DESIGNATED BY BUILDING ARCHITECT AND/OR CITY
2) WATER PENETRATION BELOW 0.01 OZ/SQ IN
3) SOUND ATTENUATION: 63Hz:10db, 125Hz:11db, 250Hz:9db, 500Hz:13db, 1000Hz:11db, 2000Hz:20db, 4000Hz:19db, 8000Hz:18db

GHD Inc.
1735 North First Street Suite 301 San Jose California 95112 USA
T 1 408 451 9615 F 1 408 451 9665
W www.ghd.com

DATE	REVISION	BY

CITY OF SANTA CLARA
WATER & SEWER UTILITIES

NORTHSIDE TANKS SITE IMPROVEMENTS PROJECT
MECHANICAL DETAILS AND SCHEDULES

APPROVED DATE
DIRECTOR OF WATER & SEWER UTILITIES

PROJ. NO.	592-1423-80300-7054-(I)30148		
DESIGNED BY	NK	DRAWN BY	CF
CHECKED BY	AC	YEAR	2014
DATE	JULY 2014	BLK. BK. PG.	94
DRAWING NO.	M501	SHT. 30	OF 49
HORIZ.	NOTED	VERT. –	DWG. NO. W-3143-4

Plot Date: 24 June 2014 - 12:21 AM Plotted by: Ming Yee Cad File No: G:\11205 City of Santa Clara\8410306 Northside Tanks Piping Reconfig\06-CAD\Sheets\8410306 M501.dwg

ABBREVIATIONS

(D)	DEMOLISH
(E)	EXISTING
(F)	FUTURE
(N)	NEW
A	AMPERES
AC	ALTERNATING CURRENT
AF	AMP FRAME
AFF	ABOVE FINISHED FLOOR
AFG	ABOVE FINISHED GRADE
AHU	AIR HANDLING UNIT
AIC	AMPS INTERRUPTING CAPACITY
ANN	ANNUNCIATOR
ATS	AUTOMATIC TRANSFER SWITCH
AWG	AMERICAN WIRE GAUGE
BAT	BATTERY
BFG	BELOW FINISH GRADE
CATV	CABLE TELEVISION
C	CONDUIT
CB	CIRCUIT BREAKER
CCTV	CLOSED CIRCUIT TELEVISION
CO	CONDUIT ONLY
CPT	CONTROL POWER TRANSFORMER
CT	CURRENT TRANSFORMER
CU	COPPER
DC	DIRECT CURRENT
EF	EXHAUST FAN
EGU	ENGINE GENERATOR UNIT
EM	EMERGENCY
EMT	ELECTRICAL METALLIC TUBING
ENT	ELECTRICAL NON-METALLIC TUBING
EP	EXPLOSION PROOF
FA	FIRE ALARM
FACP	FIRE ALARM CONTROL PANEL
FC	FOOT CANDLE
FU	FUSE
GND	GROUND
GFCI	GROUND FAULT CIRCUIT INTERRUPTER
GFI	GROUND FAULT INTERRUPTER
GFR	GROUND FAULT RELAY
HID	HIGH INTENSITY DISCHARGE
HOA	"HAND-OFF-AUTO" SWITCH
HP	HORSEPOWER
HPS	HIGH PRESSURE SODIUM
HVAC	HEATING, VENTILATION & AIR-CONDITIONING
IG	ISOLATED GROUND
JB	JUNCTION BOX
KAIC	KILO-AMPS INTERRUPTING CAPACITY
KV	KILOVOLT
KVA	KILOVOLT-AMP
KW	KILOWATT
KWH	KILOWATT-HOUR
LPS	LOW PRESSURE SODIUM
LV	LOW VOLTAGE
MCB	MAIN CIRCUIT BREAKER
MCC	MOTOR CONTROL CENTER
MCP	MOTOR CIRCUIT PROTECTOR
MFR	MANUFACTURER
MH	METAL HALIDE
MLO	MAIN LUGS ONLY
MV	MEDIUM VOLTAGE
NIC	NOT IN CONTRACT
NL	NIGHT LIGHT
NTS	NOT TO SCALE
OC	ON CENTER
PA	PUBLIC ADDRESS
PT	POTENTIAL TRANSFORMER
PVC	POLYVINYL CHLORIDE
PB	PULL BOX, ELECTRICAL
RECPT	RECEPTACLE, OUTLET
RGS	RIGID GALVANIZED STEEL (CONDUIT)
RVSS	REDUCED VOLTAGE SOFT START
RTU	REMOTE TERMINAL UNIT
TV	TELEVISION MONITOR (SET)
TVSS	TRANS. VOLT. SURGE SUPPRESSOR
UF	UNDER FLOOR
UG	UNDERGROUND
UON	UNLESS OTHERWISE NOTED
UPS	UNINTERRUPTIBLE POWER SUPPLY
V	VOLT
VA	VOLT-AMP
VFD	VARIABLE FREQUENCY DRIVE
WP	WEATHERPROOF
WPI	WEATHERPROOF IN USE
XFMR	TRANSFORMER

SWITCHING

- $ — LIGHT SWITCH, SPST - MOUNTING HEIGHT: +44" AFF, UON
- $2 — LIGHT SWITCH, DPST - MOUNTING HEIGHT: +44" AFF, UON
- $3 — LIGHT SWITCH, 3-WAY - MOUNTING HEIGHT: +44" AFF, UON
- $L — DENOTES SWITCH; LOW VOLTAGE SWITCH, MOMENTARY CONTACT, 3-POS., CENTER-OFF, MOUNTING HEIGHT: +44" AFF, UON
- $T — TIMER SWITCH - MOUNTING HEIGHT: +44" AFF, UON
- 1a — DENOTES SWITCH; DENOTES CIRCUIT; CIRCUIT AND SWITCH DESIGNATION FOR LIGHTING FIXTURE
- 6R5 — DENOTES RELAY; DENOTES CIRCUIT; CIRCUIT AND RELAY DESIGNATION FOR LIGHTING FIXTURES (SEE CORRESPONDING LIGHTING CONTROL PANEL RELAY SCHEDULE)
- D1 — DIMMER SWITCH - MOUNTING HEIGHT: +44" AFF, UON
- PP1 — OCCUPANCY SENSOR POWER PACK, 1-CIRCUIT, MOUNTED ABOVE CEILING
- PP2 — OCCUPANCY SENSOR POWER PACK, 2-CIRCUIT MOUNTED ABOVE CEILING
- CS1 — OCCUPANCY SENSOR, CEILING MOUNTED, LINE VOLTAGE
- CS2 — OCCUPANCY SENSOR, CEILING MOUNTED, LOW VOLTAGE
- W1 — OCCUPANCY SENSOR, WALL MOUNTED, LINE VOLTAGE, 1-CIRCUIT MOUNTING HEIGHT: +44" AFF, UON
- W2 — OCCUPANCY SENSOR, WALL MOUNTED, LINE VOLTAGE, 2-CIRCUIT MOUNTING HEIGHT: +44" AFF, UON
- PC — PHOTO CONTROL SWITCH - MOUNT ON BUILDING EXTERIOR
- TC — TIME CLOCK FOR LIGHTING CONTROL

ELECTRICAL SYMBOLS LEGEND

LIGHTING

- FLUORESCENT FIXTURE, RECESSED
- RECESSED DOWN LIGHT FIXTURE
- RECESSED DIRECTIONAL FIXTURE (ARROW INDICATES AIMING)
- FLUORESCENT FIXTURE, SURFACE MOUNTED
- SURFACE, PENDANT OR OTHER FIXTURE
- FLUORESCENT FIXTURE, WALL MOUNTED
- WALL-MOUNTED HID, INCANDESCENT, OR COMPACT FLUORESCENT FIXTURE
- FLUORESCENT FIXTURE, PENDANT OR CABLE HUNG
- LIGHT TRACK AND TRACK-MOUNTED FIXTURES
- BATH FAN WITH INTEGRAL LIGHT
- EXIT SIGN, SINGLE FACE WITH DIRECTIONAL ARROWS AS INDICATED
- EXIT SIGN, DOUBLE FACE WITH DIRECTIONAL ARROWS AS INDICATED
- LL — EXIT SIGN, LOW LEVEL
- COMBINATION EXIT/EMERGENCY LIGHT FIXTURE MOUNTING HEIGHT: +8'-0" AFF, UON
- EMERGENCY FIXTURE MOUNTING HEIGHT: +8'-0" AFF, UON
- DENOTES FIXTURE CONNECTED TO EMERGENCY CIRCUIT
- ADJUSTABLE SPOT OR FLOOD (ARROW INDICATES AIMING)
- OUTDOOR SITE LIGHT, POLE MOUNTED LUMINAIRE ARROW INDICATES AIMING DIRECTION, IF APPLICABLE
- BOLLARD OR POST-TOP FIXTURE

OBJECT LINES

- NEW OBJECTS (HEAVY CONTINUOUS LINES, UNDERGROUND CONDUIT HEAVY DASHED LINES)
- EXISTING OBJECTS TO REMAIN. MAY INCLUDE NEW CIRCUITING ETC. (FINE CONTINUOUS LINES, UNDERGROUND CONDUIT FINE DASHED LINES)
- EXISTING OBJECTS TO BE DEMOLISHED (EXTRA FINE DASHED LINES, SCREENED)

ANNOTATION

- 1 — KEYNOTE
- 1 — DEMOLITION NOTE
- 10 — RACEWAY, FEEDER OR CIRCUIT DESIGNATION (SEE SCHEDULE)
- A / 180 — DENOTES TYPE; DENOTES WATTS; LIGHTING FIXTURE TYPE DESIGNATION (SEE SCHEDULE)
- 1 / E-501 — DETAIL NUMBER; SHEET NUMBER ON WHICH DETAIL APPEARS; DETAIL INDICATOR
- A / E-301 — SECTION LETTER; SHEET NUMBER ON WHICH SECTION APPEARS; SECTION INDICATOR
- WH / 1 — MECHANICAL EQUIPMENT DESIGNATION (SEE SCHEDULE)

POWER

- +48" — DENOTES HEIGHT IN INCHES AFF (INTERIOR) AFG (EXTERIOR); DUPLEX RECEPTACLE, 15A 125V 2P 3W, GROUNDING TYPE, MOUNTING HEIGHT: +18" AFF UON
- DUPLEX RECEPTACLE - SPLIT WIRED, SWITCHED
- DUPLEX RECEPTACLE - EMERGENCY POWER
- C — DUPLEX RECEPTACLE - CEILING MOUNTED
- FF — FLOOR RECEPTACLE, 15A 125V 2P 3W, GROUNDING TYPE, FLUSH TYPE UON
- DOUBLE DUPLEX RECEPTACLE, 15A 125V 2P 3W, GROUNDING TYPE, MOUNTING HEIGHT: +18" AFF UON
- SINGLE RECEPTACLE, 20A 125V 2P 3W, GROUNDING TYPE, MOUNTING HEIGHT: +18" AFF UON
- OR — SPECIAL PURPOSE RECEPTACLE AS DESIGNATED SEE 'SPECIAL SYMBOLS' ON EACH SHEET
- DUAL SERVICE RECESSED FLOOR BOX WITH DUPLEX AND DATA RECEPTACLES
- J OR J — JUNCTION BOX, CODE SIZED UON
- FLOOR JUNCTION BOX
- DISCONNECT SWITCH - FUSED WHERE APPLICABLE
- MOTOR STARTER, COMBINATION WITH DISCONNECT SWITCH
- MOTOR STARTER OR CONTROLLER
- M — MOTOR CONNECTION
- CEILING EXHAUST FAN
- WH OR WH — WATER HEATER
- P — POWER POLE: P=POWER, T=TELEPHONE, D=DATA, C=COMBINATION
- TEST PORT
- OR — GROUND ROD
- GUY WIRE AND ANCHOR
- T — THERMOSTAT (SEE MECHANICAL DRAWINGS) COORDINATE MOUNTING HEIGHT
- BT — BYPASS TIMER OR TIME SWITCH
- PUSHBUTTON
- LC — LIGHTING CONTACTOR

EQUIPMENT

- MAIN SWITCHBOARD
- DISTRIBUTION PANEL BOARD
- COMBINATION METER/MAIN SERVICE PANEL
- OR — BRANCH CIRCUIT PANEL BOARD, SURFACE OR FLUSH MOUNTED
- OR — LIGHTING CONTROL PANEL
- OR — SIGNAL TERMINAL CABINET OR CONTROL PANEL SURFACE OR FLUSH MOUNTED
- SIGNAL TERMINAL BACKBOARD
- N30 — CONCRETE UNDERGROUND HAND HOLE (NUMBER DENOTES CHRISTY SIZE)
- T OR — TRANSFORMER

CONDUIT

- CONDUIT INSTALLED ABOVE GRADE
- CONDUIT INSTALLED UNDERGROUND OR UNDER SLAB
- CONDUIT STUB-OUT WITH CAP
- FLEXIBLE CONDUIT WHIP TO LIGHT FIXTURE OR EQUIPMENT
- INDICATES CIRCUIT BREAKER I.D. (L1–4); INDICATES BRANCH PANEL; CONDUIT HOME RUN TO DESIGNATED PANEL, TERMINAL, OR CONTROL CABINET
  EXAMPLES: L1–6,8 (COMMA INDICATES MULTIPLE SINGLE POLE CIRCUITS); L1–10/12 (SLASH INDICATES MULTI–POLE CIRCUIT)

NOTE FOR CONDUIT: THE TIC MARKS INDICATE THE QUANTITY OF #12 AWG WIRES OR, IF INDICATED, THE QUANTITY OF OTHER SIZE WIRE OR CABLES.

SEE THE SINGLE LINE DIAGRAM FOR FEEDER SIZES.
EXAMPLES: = (3) #12; = (2) #10; = (1) TYPE F1 CABLE. SEE CABLE SCHEDULE.

COMMUNICATION

- CCTV CAMERA, CEILING MOUNT
- I — INTERCOM CALL IN SWITCH - MOUNTING HEIGHT: +44" AFF, UON
- TELEPHONE OUTLET FOR WALL MOUNTED TELEPHONE MOUNTING HEIGHT: +44" AFF UON
- DATA OUTLET - MOUNTING HEIGHT: +18" AFF UON
- 2 — DENOTES # OF TELEPHONE JACKS; DENOTES # OF DATA JACKS; TELEPHONE/DATA OUTLET, FLUSH TYPE UON MOUNTING HEIGHT: +18" AFF UON
- 1,2 — SURFACE RACEWAY WITH POWER AND TELEPHONE/DATA RECEPTACLES AS INDICATED
- TV — CATV OUTLET - MOUNTING HEIGHT: +96" AFF UON
- AVI — AUDIO/VIDEO OUTLET - MOUNTING HEIGHT: +18" AFF UON
- C — CLOCK WITH BUZZER - MOUNTING HEIGHT: SEE PLANS
- B — BELL, STANDARD 6" - MOUNTING HEIGHT: SEE PLANS PA SYSTEM
- S — SPEAKER - WALL MOUNTED
- S — PA SYSTEM SPEAKER - CEILING MOUNTED
- S — PA SYSTEM HORN - MOUNTING HEIGHT: SEE PLANS

GENERAL ELECTRICAL NOTES

1. GENERATOR IS CLASSIFIED AS "LEGALLY REQUIRED LEVEL 2 STANDBY GENERATOR" PER CEC 701.2. SEE DRAWING E601, SINGLE LINE DIAGRAM FOR SIZING AND CONNECTION INFORMATION. GENERATOR SHALL SERVE THE FOLLOWING LOADS:
   A. 37.5KVA TRANSFORMER FEEDING (N) STATION DISTRIBUTION PANEL
   B. 225A STATION DIST. PANEL AND 100A PANEL L
   C. 4 PUMPS, 100 HORSEPOWER EACH
2. 600 GALLON SUB-BASE FUEL TANK SHALL BE DOUBLE-WALL STEEL. LABEL ABOVEGROUND TANK ON BOTH SIDES AND/OR TANK ENCLOSURE WITH **600 GALLONS DIESEL FUEL - COMBUSTIBLE LIQUID - NO SMOKING**
3. LABEL ALL DOORS, AREAS, PIPING, TUBING, TANKS, EXHAUST DUCTS, CONTAINERS, ETC. IN ACCORDANCE WITH SANTA CLARA FIRE DEPARTMENT GUIDELINES. ADDITIONAL LABELING/SIGNAGE MAY BE REQUIRED UPON FIELD INSPECTION (2009 SCMFEC).
4. INSTALL HAZARD IDENTIFICATION SIGNS AS SPECIFIED IN NFPA704 OR UFC 79-3 AT THE ENTRANCES TO LOCATIONS WHERE HAZARDOUS MATERIALS ARE STORED, AND ON STATIONARY ABOVEGROUND TANKS.
5. AFTER INSTALLATION AND PRIOR TO PLACING IN SERVICE, PNEUMATICALLY TEST PRIMARY HORIZONTAL TANKS AT 3-5 PSIG FOR 60 MINUTES. THE INTERSTITIAL SPACE OF HORIZONTAL TANKS SHALL EITHER BE PNEUMATICALLY TESTED AT 3-5 PSIG FOR 60 MINUTES OR BY VACUUM AT 5.3 INCHES HG (17.9kPA).VERTICAL PRIMARY TANKS SHALL BE PNEUMATICALLY TESTED AT 1.5-2.5 PSIG FOR 60 MINUTES OR PERFORM A VACUUM TEST FOR 30 MINUTES. THE INTERSTITIAL SPACE OF VERTICAL TANKS SHALL EITHER BE PNEUMATICALLY TESTED AT 1.5-2.5 PSIG FOR 60 MINUTES OR BY VACUUM AT 5.3 INCHES HG (17.9kPA).
6. AN ONSITE ACCEPTANCE TEST IN ACCORDANCE WITH SECTION 7.13 OF NFPA 110 SHALL BE PERFORMED BY AN EXPERIENCED THIRD PARTY. DOCUMENTATION SHALL BE PROVIDED TO THE AHJ OUTLINING THE ACCEPTANCE TESTS AND CONFORMITY TO THE REQUIREMENTS OF SECTION 7.13.
7. IN THE EVENT OF FAILURE OF THE NORMAL POWER SUPPLY, THE LEGALLY REQUIRED STANDBY POWER SYSTEM WILL BE AVAILABLE WITHIN THE TIME REQUIRED FOR THE APPLICATION BUT NOT TO EXCEED 60 SECONDS.

GHD Inc.
1735 North First Street Suite 301 San Jose California 95112 USA
T 1 408 451 9615 F 1 408 451 9665
W www.ghd.com

DATE	REVISION	BY

CITY OF SANTA CLARA
WATER & SEWER UTILITIES

NORTHSIDE TANKS SITE IMPROVEMENTS PROJECT
ELECTRICAL LEGEND AND ABBREVIATIONS

APPROVED DATE
DIRECTOR OF WATER & SEWER UTILITIES

PROJ. NO.	592-1423-80300-7054-(I)30148		
DESIGNED BY	NK	DRAWN BY	CF
CHECKED BY	AC	YEAR	2014
DATE	JULY 2014	BLK. BK. PG.	94
DRAWING NO.	E001	SHT. 31	OF 49
HORIZ.	NOTED	VERT. –	DWG. NO. W-3143-4

Plot Date: 24 June 2014 - 8:49 AM Plotted by: Ming Yee Cad File No: N:\US\San Francisco\Projects\11205 City of Santa Clara\8410306 Northside Tanks Piping Reconfig\06-CAD\Sheets\8410306 E001.dwg

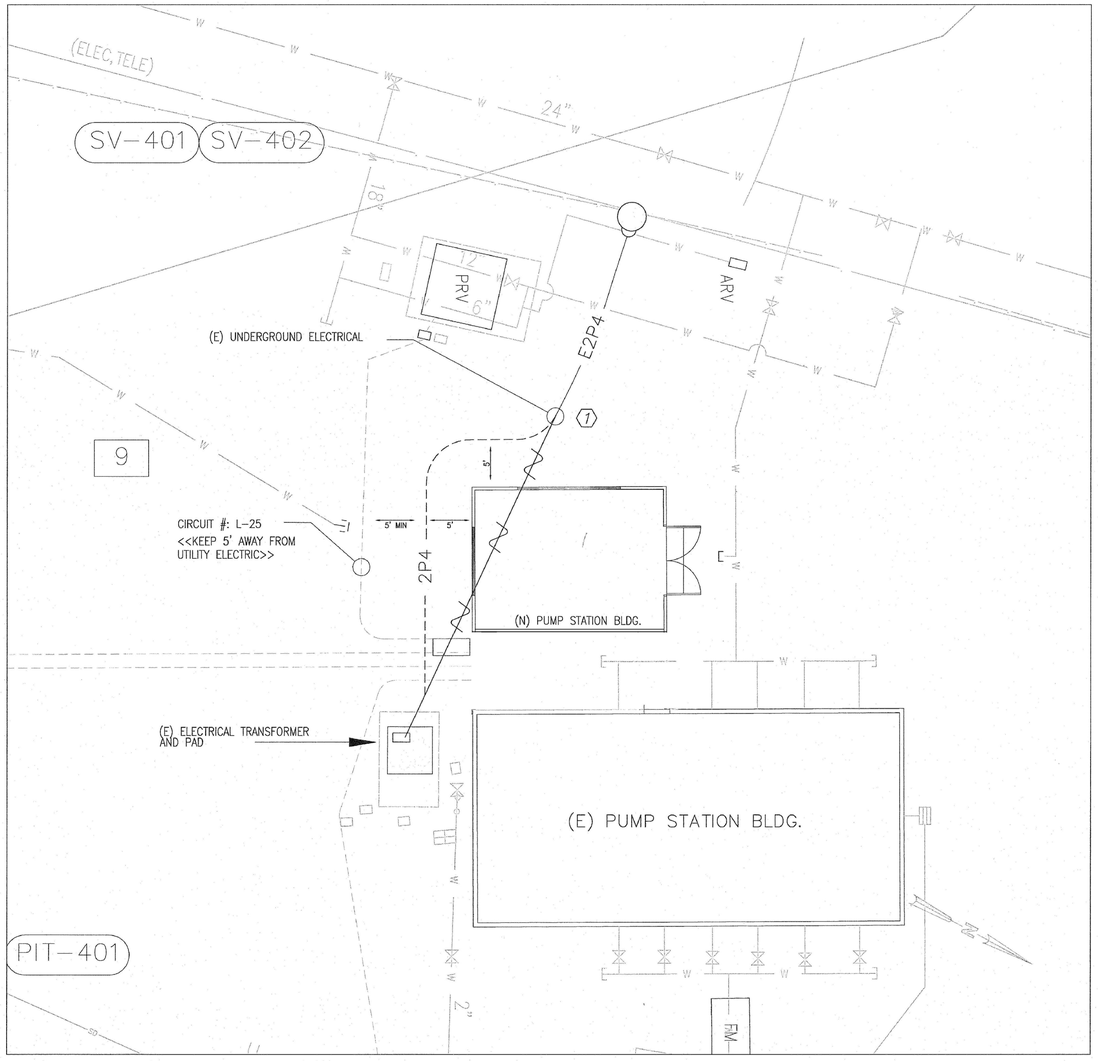

GENERAL NOTES:

ALL CONDITIONS ON THIS DRAWING MUST BE MET PRIOR TO PERMANENT ELECTRICAL SERVICE.

- X = INDICATES NOTE IS REQUIRED FOR THIS JOB.
- X SERVICE VOLTAGE SHALL BE 277/480 V, 4 W 3 ø .
- X AVAILABLE SHORT CIRCUIT AT THE DISTRIBUTION TRANSFORMER (SECONDARY) IS 13,650 AMPS SYMMETRICAL.
- X ALL METERS (PER BLDG.) MUST BE GROUPED AND ACCESSIBLE TO TENANTS AND THE UTILITY AT ALL TIMES.
- X METER ENCLOSURES SHALL MEET METER CABINET ENCLOSURE CLEARANCES PER CITY OF SANTA CLARA ELECTRIC DEPARTMENT DWG. MS-G7, REV. 2.
- X ELECTRIC METER(S) AND MAIN SERVICE DISCONNECT(S) SHALL BE LOCATED OUTSIDE OF BUILDING OR IN A UTILITY ROOM DIRECTLY ACCESSIBLE FROM THE OUTSIDE. THE CITY SHALL HAVE IMMEDIATE AND UNHINDERED ACCESS TO THIS EQUIPMENT AT ALL TIMES WITHOUT NOTICE.
- X SWITCHBOARD MANUFACTURER SHALL SUBMIT SWITCHBOARD DRAWINGS, IN TRIPLICATE, FOR REVIEW PRIOR TO MANUFACTURE, TO SILICON VALLEY POWER, 1500 WARBURTON AVE., SANTA CLARA, CA 95050.
- X CUSTOMER TO FILL OUT LOAD SURVEY FORM (COPY ATTACHED) WITH COMPLETE LOAD BREAKDOWNS, SERVICE DATE, SIZE AND NUMBER OF SERVICE ENTRANCE CONDUCTORS (PER BLDG.). RETURN TO ELECTRIC DEPARTMENT ADDRESS ABOVE.
- X PROVIDE 1-1/2" CONDUIT FROM UTILITY METER COMPARTMENT TO MPOE PHONE BOARD COORDINATE WITH METER SHOP FOREMAN DAN RYKER AT (408) 615-5629
- X ELECTRICAL PERMITS FOR SERVICE ENTRANCE AND OTHER PRIVATE ELECTRICAL WORK SHALL BE OBTAINED FROM THE CITY PERMIT CENTER PRIOR TO START OF WORK OR PROVIDE LETTER FROM INSPECTING AUTHORITY TO CITY INDICATING ELECTRICAL INSPECTION IS COMPLETE.
- X ELECTRIC EASEMENTS ARE REQUIRED AND MUST BE SIGNED PRIOR TO CONNECTING PERMANENT SERVICE. DOCUMENTS TO FOLLOW. NO TREES MAY BE PLANTED IN UG EASEMENT AREAS
- X DEVELOPER SHALL FURNISH AND INSTALL ALL MATERIAL ON-SITE AND OFF-SITE IN ACCORDANCE WITH THIS DRAWING AND SILICON VALLEY POWER STANDARD U.G. 1000, REV. #5.
- X SEE U.G. 1000, REV. #5, SHEETS 3 & 4 FOR WORK REQUIREMENTS. LABEL PHASE AND NEUTRAL ON SERVICE ENTRANCE CONDUCTORS. FOR MULTI-BLDG. SITE, IDENTIFY AS TO BLDG. SERVED. SILICON VALLEY POWER ELECTRIC CREWS WILL MAKE ALL CONNECTIONS TO UTILITY SYSTEM.
- X SEE U.G. 1000, REV. #5, SHEET 9 FOR UTILITY FIELD INSPECTIONS. CALL (408) 615-5600.
- X FOR ALL WORK IN THE PUBLIC RIGHT-OF-WAY OBTAIN REQUIRED STREET OPENING PERMIT FROM THE CITY PERMIT CENTER. TREES SHALL BE A MINIMUM OF 5'-0" FROM CENTERLINE OF TRENCH.
- X PRIOR TO ANY EXCAVATION CALL U.S.A. UNDERGROUND SERVICE ALERT (800) 227-2600
- X COORDINATE WORK WITH LINE MAINTENANCE AND CONSTRUCTION DIVISION (408) 615-5600.
- X CAUTION!!!! - ENERGIZED HIGH VOLTAGE CABLE(S).

LEGEND

		NEW/INSTALL	EXISTING
PL	PROPERTY LINE		
EE	ELECTRICAL EASEMENT		
CONDUITS/TRENCH INSTALL PER NOTE (34)	NOTE!!! DO NOT USE FLEX CONDUIT, OR DEGREE COUPLINGS ANYWHERE ON THIS JOB. ONLY USE BENDS WHERE CALLED FOR BY CONSTRUCTION NOTE. FOR TYPICAL TRENCH SECTION SEE UG-1000 REV. 5 SHEET 34.	— 2P5 —	E2P5 (EXISTING SIZE OF CONDUIT, USE OF CONDUIT, NUMBER OF CONDUITS (ABOVE NOTATION TYPICAL))
P OR PRI	PRIMARY	— 2P5 —	E2P5
S OR SEC	SECONDARY	— 2S5 —	E2S5
S/L OR ST. LT.	STREET LIGHT	— S/L2 —	ES/L2
F/A	FIRE ALARM	— F/A2 —	EF/A2
U/E	UTILITY/ELECTRICAL	— U/E2 —	EU/E2
PP	POWER POLE & RISER AS REQUIRED ON PLAN. RISER PER NOTE (37)	NEW PP BY CITY, NEW RISER	EXISTING PP, NEW RISER
S/L FD	STREET LIGHT FOUNDATION (38)	□	■
S/L FD	STREET LIGHT FOUNDATION AND ELECTROLIER	□-⊕	■-⊕
UNDERGROUND ELECTRIC SERVICE ENTRANCE BY DEVELOPER IN ACCORDANCE WITH CITY OF SANTA CLARA BUILDING INSPECTION DIVISION CODES.		→	- - - →
GUARD PIPE PER NOTE (13) "A" OR "B" (13) TYPE "A" OR "B" AS REQUIRED		○ TYPE "A" OR "B"	●
LOW VOLTAGE PULLBOX (LVPB)	PER NOTE (18) LV, S/L, OR U/E (AS NOTED ON PLAN)	□ (18)	□
	PER NOTE (19) LV OR U/E (AS NOTED ON PLAN)	□ (19)	□
	PER NOTE (20) LV, HV, OR U/E (AS NOTED ON PLAN)	□ (20)	□
PULLBOX (PB)	PRIMARY PULLBOX PER NOTE (24) LABEL "PB-ID#" (USE ID# SHOWN ON PLAN)	⊡ PB-ID# (24)	⊡
MANHOLE (MH)	PRIMARY MANHOLE PER NOTE (25) LABEL "MH-ID#" (USE ID# SHOWN ON PLAN)	○ MH-ID# (25)	○
VAULT (V)	PRIMARY SWITCH VAULT PER NOTE (26) LABEL "V-ID#" (USE ID# SHOWN ON PLAN)	⊡ V-ID# (26)	⊡
	TRANSFORMER PAD PER NOTE (15)	⊡ TRANSF. LOCATING ARROW (15)	⊡ CONCRETE APRON
UG-1000 REV. 5	CITY OF SANTA CLARA ELECTRIC DEPT. UNDERGROUND ENGINEERING STANDARD, REVISION NUMBER 5.		

(34) (37) (38) (13) (18) (21) (19) (24) (25) (20) (15) FOR DETAILS OF THESE BALLOON NOTE NUMBERS SEE THE CORRESPONDING PAGE NUMBER IN UG-1000 REVISION 5.

CONSTRUCTION NOTES:

(7) CAUTION! ENERGIZED CONDUCTOR INSIDE EXISTING CONDUITS. HAND DIG! AFTER SVP HAS REMOVED CONDUCTORS; DEVELOPER TO CUT INTO EMPTY 4" CONDUIT AND ROUTE AS SHOWN USING 2-4" X 90° X 5'R (PRIMARY) PVC BENDS. MAINTAIN A 5' SEPERATION FROM UTILITY UNDERGROUND ELECTRICAL AND OTHER STRUCTURES. COORDINATE CUT IN OF P4 WITH SVP INSPECTOR/COORDINATOR @ 408-640-6302

WATER DEPT.'S WORK

REVISION	DATE		APPROVED
DESIGNED BY: MAV		C.S.C. NORTH SIDE WATER STORAGE E/S SAN TOMAS CK N/O HETCH- HETCHY	DRAWN BY: M.VITARELLI
APPROVED BY: [illegible] 13DEC2013			SCALE: NTS DATE: 12/2013
			MAP #: 94 SHT 1 OF 1
DEV. WK.: X / CTY. WK.: / IMP. PLNS.:		SILICON VALLEY POWER CITY OF SANTA CLARA	DRAWING NUMBER 33394 REV RV

GHD Inc.
1735 North First Street Suite 301 San Jose California 95112 USA
T 1 408 451 9615 F 1 408 451 9665
W www.ghd.com

DATE	REVISION	BY

CITY OF SANTA CLARA
WATER & SEWER UTILITIES

NORTHSIDE TANKS SITE IMPROVEMENTS PROJECT
SVP CONDUIT RELOCATION

APPROVED DATE
DIRECTOR OF WATER & SEWER UTILITIES

PROJ. NO. 592-1423-80300-7054-(I)30148			
DESIGNED BY NK		DRAWN BY CF	
CHECKED BY AC		YEAR 2014	
DATE JULY 2014		BLK. BK. PG. 94	
DRAWING NO. E002		SHT. 32	OF 49
HORIZ. NOTED	VERT. -	DWG. NO. W-3143-4	

Plot Date: 24 June 2014 - 8:50 AM Plotted by: Ming Yee Cad File No: N:\US\San Francisco\Projects\11205 City of Santa Clara\8410306 Northside Tanks Piping Reconfig\06-CAD\Sheets\8410306 E002.dwg

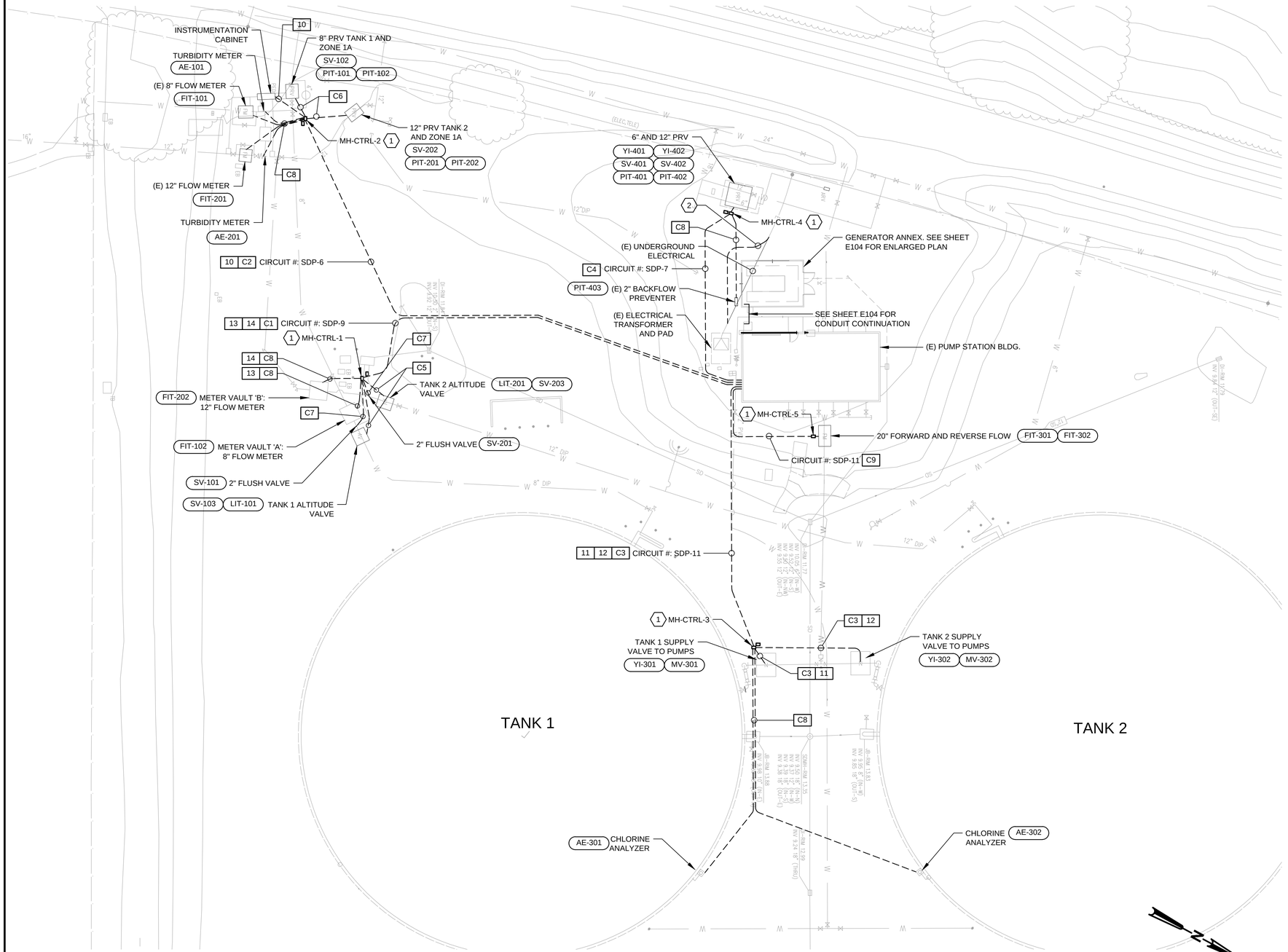

SHEET GENERAL NOTES

1. SEE 7/E501 FOR TYPICAL TRENCH DETAIL.
2. CONDUIT ROUTING IS SHOWN AS SCHEMATIC. ADJUST FINAL ROUTE IN FIELD.

KEYNOTES

1. PROVIDE AND INSTALL (2) 17"x11"x12" PULLBOXES AT EACH LOCATION SHOWN WITH TRAFFIC RATED COVER. DESIGNATE ONE (1) PULLBOX FOR POWER AND ONE (1) PULLBOX FOR CONTROLS. MOUNT ADJACENT TO EACH OTHER AND FLUSH IN GRADE.
2. RELOCATE (E) SILICON VALLEY POWER 15KV SERVICE FEEDER. SEE ATTACHED SHEET E002 FOR MORE INFORMATION.

SHEET SPECIAL SYMBOLS

XX-XXX — INSTRUMENTATION IDENTIFICATION TAG. REFERENCE SHEET E603

XX — CONDUIT IDENTIFICATION TAG. REFERENCE SHEET E602

1 / E101 **ELECTRICAL SITE PLAN**

GHD Inc.
1735 North First Street Suite 301 San Jose California 95112 USA
T 1 408 451 9615 F 1 408 451 9665
W www.ghd.com

DATE	REVISION	BY

CITY OF SANTA CLARA
WATER & SEWER UTILITIES

NORTHSIDE TANKS SITE IMPROVEMENTS PROJECT
ELECTRICAL SITE PLAN

APPROVED DATE
DIRECTOR OF WATER & SEWER UTILITIES

PROJ. NO.	592-1423-80300-7054-(I)30148		
DESIGNED BY	NK	DRAWN BY	CF
CHECKED BY	AC	YEAR	2014
DATE	JULY 2014	BLK. BK. PG.	94
DRAWING NO.	E101	SHT.	33 OF 49
HORIZ.	NOTED	VERT.	–
		DWG. NO.	W-3143-4

Plot Date: 24 June 2014 - 12:14 AM Plotted by: Ming Yee Cad File No: G:\11205 City of Santa Clara\8410306 Northside Tanks Piping Reconfig\06-CAD\Sheets\8410306 E101.dwg

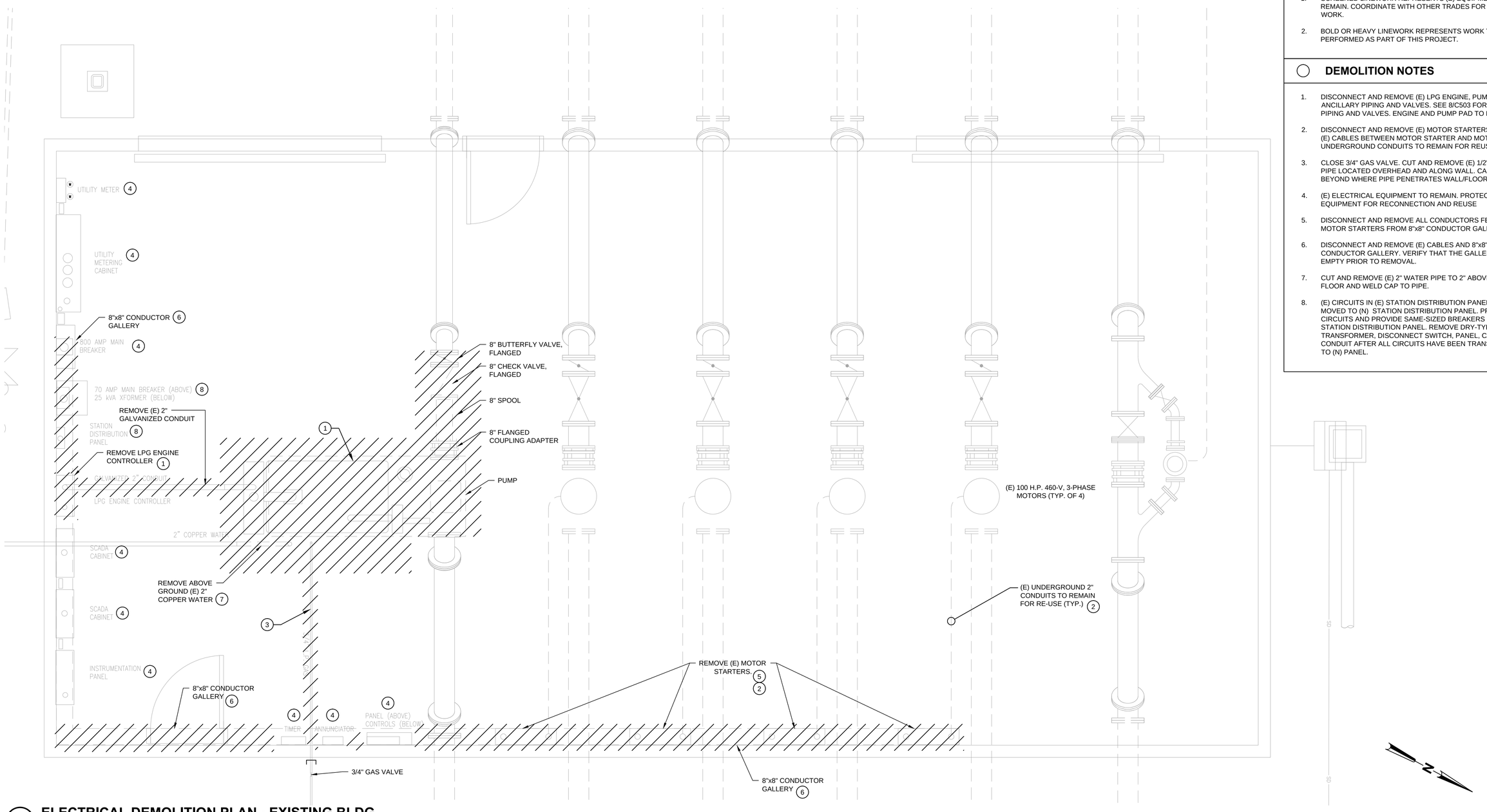

1 / E102 ELECTRICAL DEMOLITION PLAN - EXISTING BLDG

SHEET GENERAL NOTES

1. SCREENED LINEWORK REPRESENTS (E) EQUIPMENT TO REMAIN. COORDINATE WITH OTHER TRADES FOR ADDITIONAL WORK.
2. BOLD OR HEAVY LINEWORK REPRESENTS WORK TO BE PERFORMED AS PART OF THIS PROJECT.

DEMOLITION NOTES

1. DISCONNECT AND REMOVE (E) LPG ENGINE, PUMP AND ANCILLARY PIPING AND VALVES. SEE 8/C503 FOR NEW PIPING AND VALVES. ENGINE AND PUMP PAD TO REMAIN.
2. DISCONNECT AND REMOVE (E) MOTOR STARTERS AND ALL (E) CABLES BETWEEN MOTOR STARTER AND MOTOR. UNDERGROUND CONDUITS TO REMAIN FOR REUSE.
3. CLOSE 3/4" GAS VALVE. CUT AND REMOVE (E) 1/2" LP GAS PIPE LOCATED OVERHEAD AND ALONG WALL. CAP PIPE 4" BEYOND WHERE PIPE PENETRATES WALL/FLOOR.
4. (E) ELECTRICAL EQUIPMENT TO REMAIN. PROTECT (E) EQUIPMENT FOR RECONNECTION AND REUSE
5. DISCONNECT AND REMOVE ALL CONDUCTORS FEEDING (E) MOTOR STARTERS FROM 8"x8" CONDUCTOR GALLERY.
6. DISCONNECT AND REMOVE (E) CABLES AND 8"x8" CONDUCTOR GALLERY. VERIFY THAT THE GALLERY IS EMPTY PRIOR TO REMOVAL.
7. CUT AND REMOVE (E) 2" WATER PIPE TO 2" ABOVE FINISHED FLOOR AND WELD CAP TO PIPE.
8. (E) CIRCUITS IN (E) STATION DISTRIBUTION PANEL TO BE MOVED TO (N) STATION DISTRIBUTION PANEL. PRESERVE CIRCUITS AND PROVIDE SAME-SIZED BREAKERS IN (N) STATION DISTRIBUTION PANEL. REMOVE DRY-TYPE TRANSFORMER, DISCONNECT SWITCH, PANEL, CABLES AND CONDUIT AFTER ALL CIRCUITS HAVE BEEN TRANSFERRED TO (N) PANEL.

GHD Inc.
1735 North First Street Suite 301 San Jose California 95112 USA
T 1 408 451 9615 F 1 408 451 9665
W www.ghd.com

6/27/14

DATE	REVISION	BY

CITY OF SANTA CLARA
WATER & SEWER UTILITIES

NORTHSIDE TANKS SITE IMPROVEMENTS PROJECT
ELECTRICAL DEMOLITION PLAN - EXISTING BLDG

APPROVED DATE
DIRECTOR OF WATER & SEWER UTILITIES

PROJ. NO.	592-1423-80300-7054-(I)30148		
DESIGNED BY	NK	DRAWN BY	CF
CHECKED BY	AC	YEAR	2014
DATE	JULY 2014	BLK. BK. PG.	94
DRAWING NO.	E102	SHT. 34	OF 49
HORIZ.	NOTED	VERT. –	DWG. NO. W-3143-4

Plot Date: 24 June 2014 - 12:14 AM Plotted by: Ming Yee Cad File No: G:\11205 City of Santa Clara\8410306 Northside Tanks Piping Reconfig\06-CAD\Sheets\8410306 E102.dwg

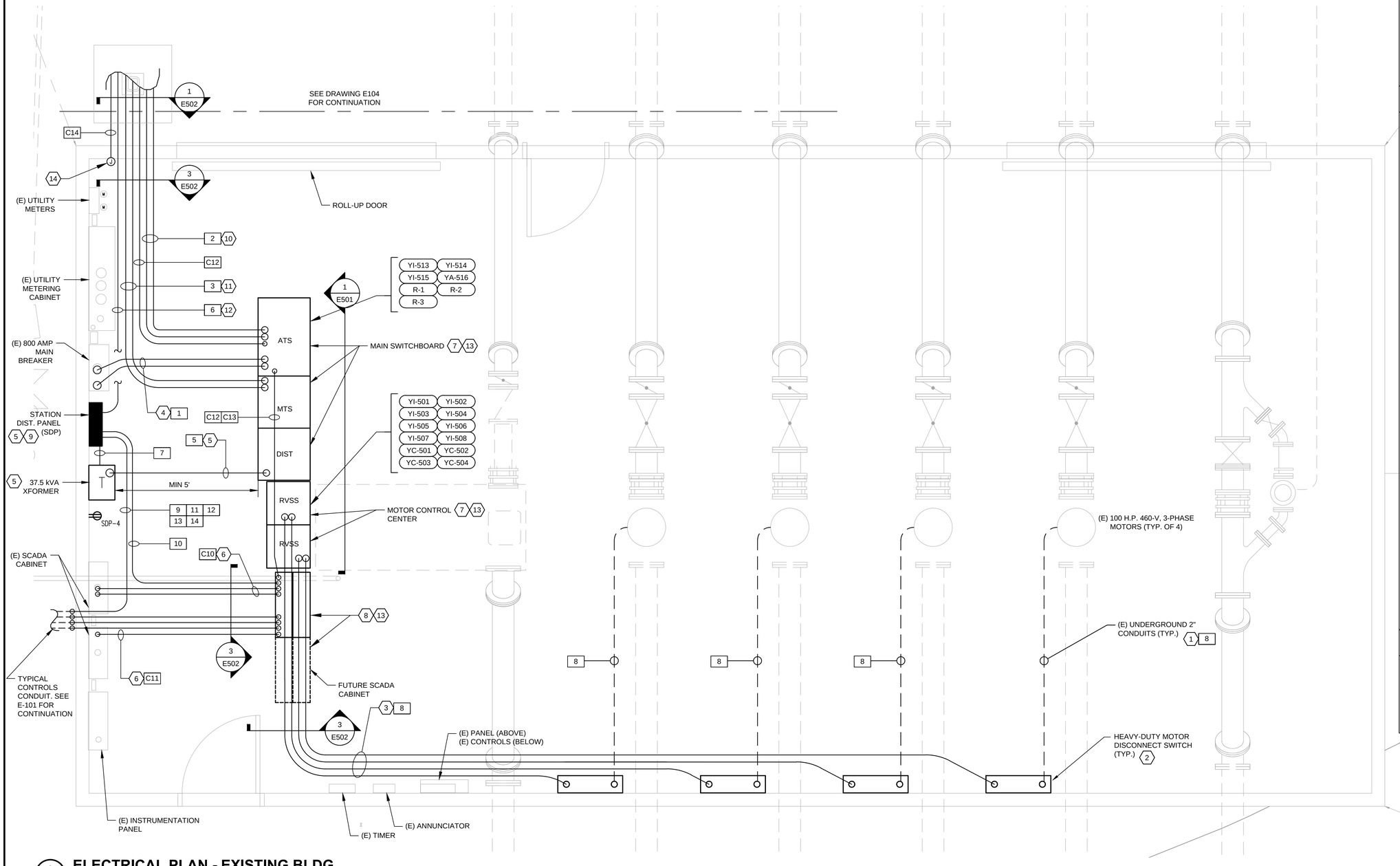

1 E103 **ELECTRICAL PLAN - EXISTING BLDG**

0 2' 4'
1"=2'

SHEET GENERAL NOTES

1. SCREENED LINEWORK REPRESENTS (E) EQUIPMENT TO REMAIN. COORDINATE WITH OTHER TRADES FOR ADDITIONAL WORK.
2. BOLD OR HEAVY LINEWORK REPRESENTS WORK TO BE PERFORMED AS PART OF THIS PROJECT.
3. SUPPORT AND SECURE ALL NEW OVERHEAD CONDUIT TO (E) STRUCTURE. SEE ELECTRICAL DETAIL 3/E502.

KEYNOTES

1. PROVIDE AND INSTALL (N) CONDUCTOR FOR MOTOR POWER AND HEATER IN (E) CONDUIT. SEE SINGLE LINE DIAGRAM.
2. PROVIDE AND INSTALL (N) 480-V, 200 AMP, 3 POLE HEAVY-DUTY, MOTOR-RATED DISCONNECT IN (E) STARTER ENCLOSURE AS LOCAL MOTOR DISCONNECTING MEANS.
3. PROVIDE AND INSTALL (N) CABLE AND CONDUITS BETWEEN MOTOR CONTROL CENTER AND MOTOR DISCONNECT SWITCHES AS INDICATED.
4. PROVIDE AND INSTALL (N) CABLES AND CONDUIT BETWEEN (E) MAIN SERVICE CIRCUIT BREAKER (800 AMP) AND (N) MAIN SWITCHBOARD AUTOMATIC TRANSFER SWITCH. SEE SINGLE LINE DIAGRAM FOR DETAILS.
5. PROVIDE AND INSTALL TRANSFORMER, PANELBOARD, CONDUIT AND CABLE AS INDICATED. SEE ELECTRICAL SCHEDULE AND SINGLE LINE DIAGRAM FOR SIZING AND CIRCUIT INFORMATION.
6. PROVIDE AND INSTALL CONDUITS WITH PULL ROPE BETWEEN CONTROL TERMINATION CABINET AND (E) SCADA PANELS.
7. PROVIDE AND INSTALL FRONT-ALIGNED SWITCHBOARD AND MOTOR CONTROL CENTER LINE-UP. SEE DETAILS AND SINGLE LINE DIAGRAM FOR LAYOUT AND EQUIPMENT RATING.
8. PROVIDE AND INSTALL 30" WIDE BY 8" DEEP BY 90" HIGH, FREE STANDING CONTROL TERMINATION CABINET. SEE SHEET E505 FOR WIRING DETAILS. SEE SHEET E603 FOR INPUT/OUTPUT POINTS.
9. PROVIDE AND INSTALL JUNCTION BOX FOR SPLICING AND EXTEND (E) CONDUIT AND CABLE FROM (E) PANELBOARD TO NEW STATION DISTRIBUTION PANEL.
10. PROVIDE AND INSTALL CABLE AND CONDUIT BETWEEN ENGINE GENERATOR CIRCUIT BREAKER AND SWITCHBOARD AUTOMATIC TRANSFER SWITCH. SEE DRAWING E601, SINGLE LINE DIAGRAM FOR SIZING AND CONNECTION INFORMATION.
11. PROVIDE AND INSTALL CONDUIT AND CABLE BETWEEN PORTABLE GENERATOR CAMLOCK CONNECTORS AND MANUAL TRANSFER SWITCH (MTS). SEE DRAWING E105.
12. PROVIDE AND INSTALL CONDUIT AND CABLES BETWEEN NEW STATION DISTRIBUTION PANEL AND PANEL L IN GENERATOR BUILDING.
13. PROVIDE SEISMIC ANCHORING PER DETAIL 2/E502.
14. PROVIDE AND INSTALL A 8"x8"x6" DEEP JUNCTION BOX FOR TELEPHONE AND DATA CABLES FOR FUTURE USE.

SHEET SPECIAL SYMBOLS

XX-XXX	INSTRUMENTATION IDENTIFICATION TAG. REFERENCE SHEET E603
XX	CONDUIT IDENTIFICATION TAG. REFERENCE SHEET E602

GHD Inc.
1735 North First Street Suite 301 San Jose California 95112 USA
T 1 408 451 9615 F 1 408 451 9665
W www.ghd.com

6/27/14

DATE	REVISION	BY

CITY OF SANTA CLARA
WATER & SEWER UTILITIES

NORTHSIDE TANKS SITE IMPROVEMENTS PROJECT
ELECTRICAL PLAN - EXISTING BLDG

APPROVED DATE
DIRECTOR OF WATER & SEWER UTILITIES

PROJ. NO.	592-1423-80300-7054-(I)30148		
DESIGNED BY	NK	DRAWN BY	CF
CHECKED BY	AC	YEAR	2014
DATE	JULY 2014	BLK. BK. PG.	94
DRAWING NO.	E103	SHT. 35	OF 49
HORIZ.	NOTED	VERT. –	DWG. NO. W-3143-4

Plot Date: 24 June 2014 - 12:15 AM Plotted by: Ming Yee Cad File No: G:\11205 City of Santa Clara\8410306 Northside Tanks Piping Reconfig\06-CAD\Sheets\8410306 E103.dwg

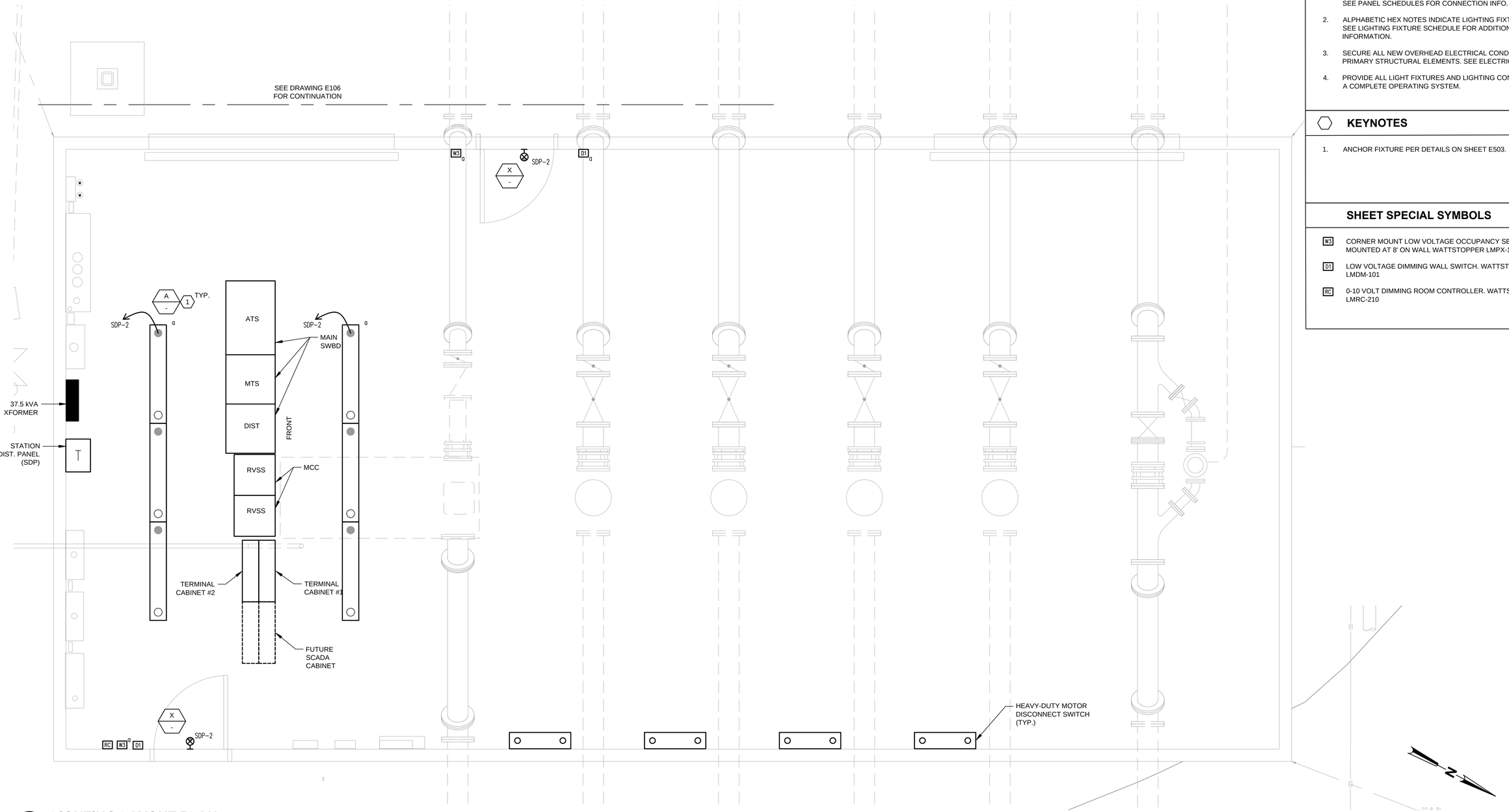

SHEET GENERAL NOTES

1. BRANCH CIRCUIT CONDUIT ROUTING OMITTED FOR CLARITY. SEE PANEL SCHEDULES FOR CONNECTION INFO.
2. ALPHABETIC HEX NOTES INDICATE LIGHTING FIXTURE TYPE. SEE LIGHTING FIXTURE SCHEDULE FOR ADDITIONAL INFORMATION.
3. SECURE ALL NEW OVERHEAD ELECTRICAL CONDUIT TO PRIMARY STRUCTURAL ELEMENTS. SEE ELECTRICAL DETAILS.
4. PROVIDE ALL LIGHT FIXTURES AND LIGHTING CONTROLS FOR A COMPLETE OPERATING SYSTEM.

KEYNOTES

1. ANCHOR FIXTURE PER DETAILS ON SHEET E503.

SHEET SPECIAL SYMBOLS

- W3 — CORNER MOUNT LOW VOLTAGE OCCUPANCY SENSOR MOUNTED AT 8' ON WALL WATTSTOPPER LMPX-100
- D1 — LOW VOLTAGE DIMMING WALL SWITCH. WATTSTOPPER LMDM-101
- RC — 0-10 VOLT DIMMING ROOM CONTROLLER. WATTSTOPPER LMRC-210

1 E104 **LIGHTING LAYOUT PLAN**

1"=2' (0, 2', 4')

GHD Inc.
1735 North First Street Suite 301 San Jose California 95112 USA
T 1 408 451 9615 F 1 408 451 9665
W www.ghd.com

6/27/14

DATE	REVISION	BY

CITY OF SANTA CLARA
WATER & SEWER UTILITIES

NORTHSIDE TANKS SITE IMPROVEMENTS PROJECT
LIGHTING LAYOUT PLAN

APPROVED DATE
DIRECTOR OF WATER & SEWER UTILITIES

PROJ. NO.	592-1423-80300-7054-(I)30148		
DESIGNED BY	NK	DRAWN BY	CF
CHECKED BY	AC	YEAR	2014
DATE	JULY 2014	BLK. BK. PG.	94
DRAWING NO.	E104	SHT. 36	OF 49
HORIZ.	NOTED	VERT. –	DWG. NO. W-3143-4

Plot Date: 24 June 2014 - 12:16 AM Plotted by: Ming Yee Cad File No: G:\11205 City of Santa Clara\8410306 Northside Tanks Piping Reconfig\06-CAD\Sheets\8410306 E104.dwg

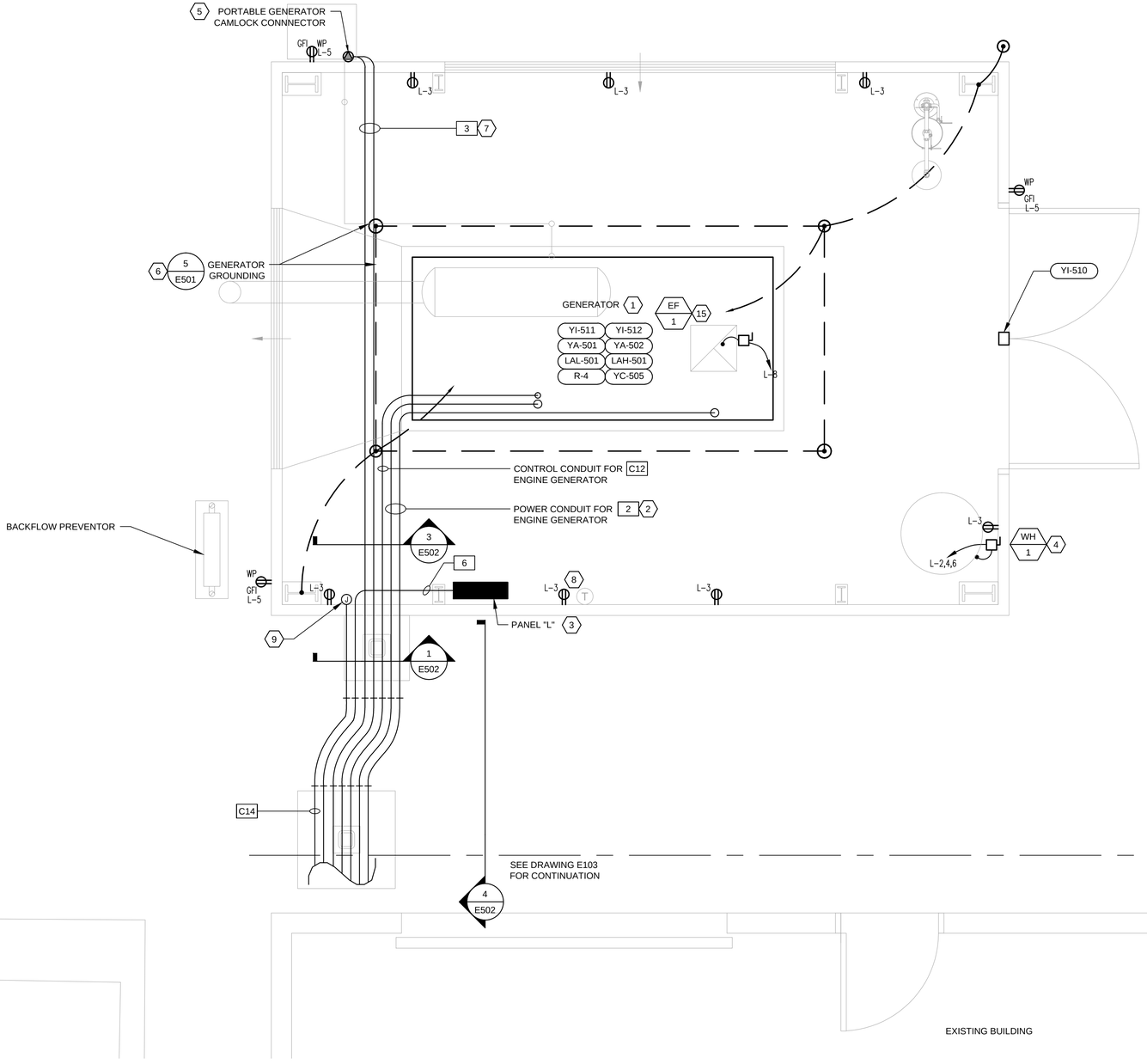

2 E105 ELECTRICAL LAYOUT PLAN

1/2"=1'-0" 0 1' 2' 4'

SHEET GENERAL NOTES

1. BRANCH CIRCUIT CONDUIT ROUTES OMITTED FOR CLARITY. SEE PANEL SCHEDULES FOR CONNECTION INFO.
2. SUPPORT AND SECURE ALL NEW OVERHEAD ELECTRICAL CONDUIT TO PRIMARY STRUCTURAL ELEMENTS. SEE ELECTRICAL DETAIL 3/E502.

KEYNOTES

1. PROVIDE STANDBY ENGINE GENERATOR WITH SUB-BASE DIESEL FUEL TANK, EXHAUST MUFFLER, SEISMIC TIE-DOWNS AND ALL OTHER APPURTENANCES REQUIRED FOR A COMPLETE AND OPERATIONAL STANDBY POWER SYSTEM. SEE SINGLE LINE DIAGRAM FOR RATINGS AND CONNECTION INFORMATION.
2. PROVIDE CABLE AND CONDUIT BETWEEN ENGINE GENERATOR CIRCUIT BREAKER AND SWITCHBOARD AUTOMATIC TRANSFER SWITCH. SEE DRAWING E601, SINGLE LINE DIAGRAM FOR SIZING AND CONNECTION INFORMATION.
3. PROVIDE AND INSTALL PANELBOARD AS INDICATED. MOUNT ON WALL. SEE ELECTRICAL SCHEDULES AND SINGLE LINE DIAGRAM FOR SIZING AND CIRCUIT INFORMATION.
4. PROVIDE 240-V, 30 AMP, 3 POLE HEAVY-DUTY DISCONNECT SWITCH FOR ELECTRIC WATER HEATER IN NEMA 1 ENCLOSURE. MOUNT ON UNISTRUT SUPPORT ADJACENT TO EWH-1.
5. PROVIDE AND INSTALL (2) SETS OF CAMLOCK CONNECTORS (TOTAL 400 AMP RATING) IN NEMA 3R ENCLOSURE FOR CONNECTING PORTABLE GENERATOR.
6. PROVIDE AND INSTALL GROUNDING GRID AS INDICATED.
7. PROVIDE AND INSTALL CONDUIT AND CABLE BETWEEN PORTABLE GENERATOR CAMLOCK CONNECTORS AND MANUAL TRANSFER SWITCH (MTS). SEE DRAWING 103.
8. PROVIDE AND INSTALL CONVENIENCE RECEPTACLES AS INDICATED.
9. PROVIDE AND INSTALL JUNCTION BOX FOR TELEPHONE AND DATA FOR FUTURE USE.

SHEET SPECIAL SYMBOLS

XX-XXX	INSTRUMENTATION IDENTIFICATION TAG. REFERENCE SHEET E603
XX	CONDUIT IDENTIFICATION TAG. REFERENCE SHEET E602

GHD Inc.
1735 North First Street Suite 301 San Jose California 95112 USA
T 1 408 451 9615 F 1 408 451 9665
W www.ghd.com

6/27/14

DATE	REVISION	BY

CITY OF SANTA CLARA
WATER & SEWER UTILITIES

NORTHSIDE TANKS SITE IMPROVEMENTS PROJECT
ELECTRICAL LAYOUT PLAN

APPROVED DATE

DIRECTOR OF WATER & SEWER UTILITIES

PROJ. NO.	592-1423-80300-7054-(I)30148		
DESIGNED BY	NK	DRAWN BY	CF
CHECKED BY	AC	YEAR	2014
DATE	JULY 2014	BLK. BK. PG.	94
DRAWING NO.	E105	SHT. 37	OF 49
HORIZ.	NOTED	VERT. –	DWG. NO. W-3143-4

Plot Date: 24 June 2014 - 12:16 AM Plotted by: Ming Yee Cad File No: G:\11205 City of Santa Clara\8410306 Northside Tanks Piping Reconfig\06-CAD\Sheets\8410306 E105.dwg

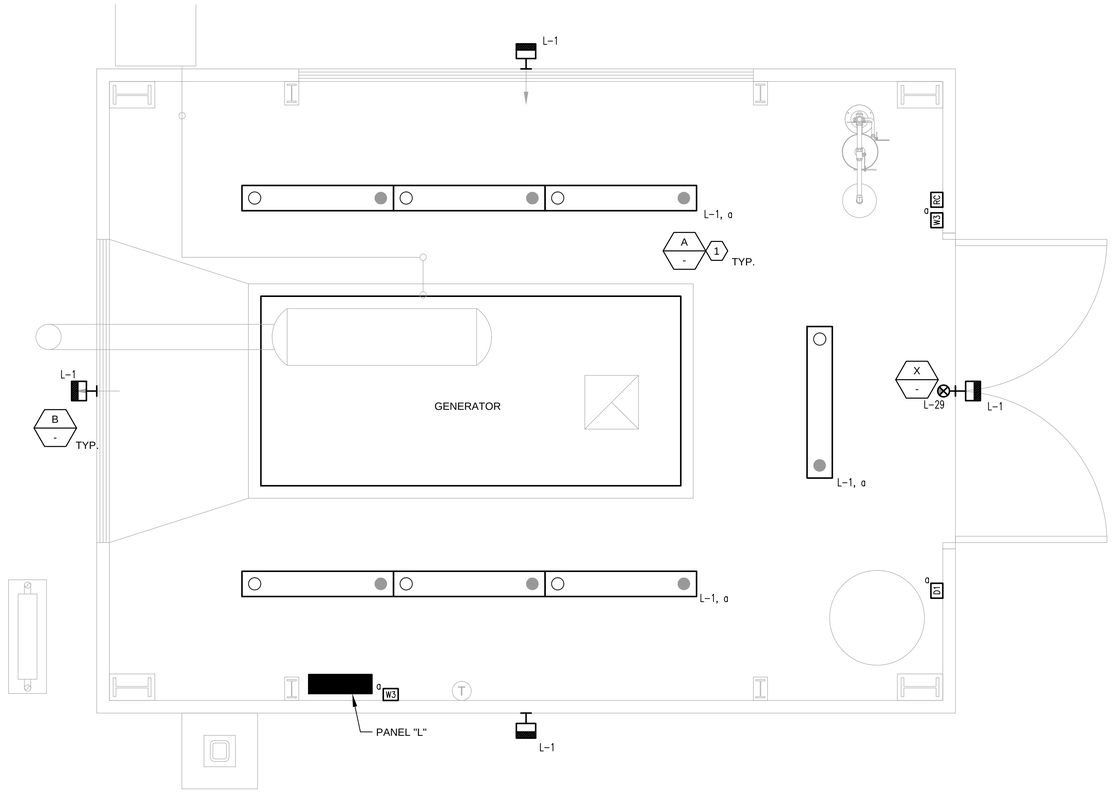

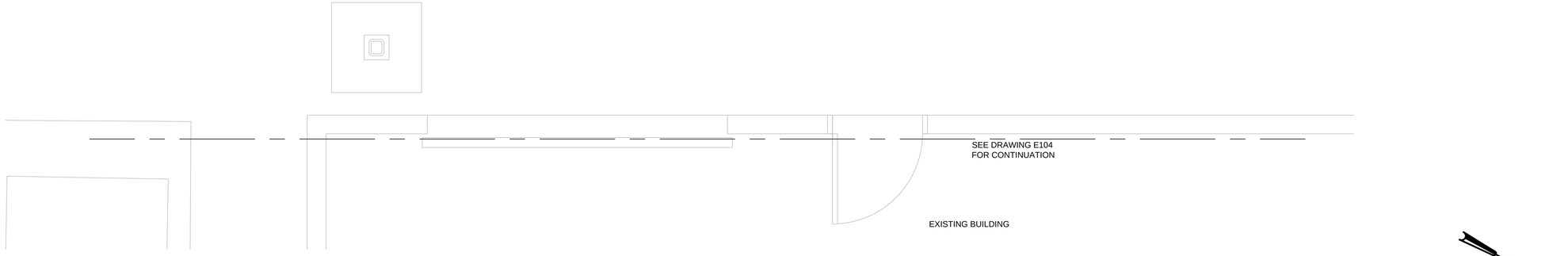

SHEET GENERAL NOTES

1. BRANCH CIRCUIT CONDUIT ROUTES OMITTED FOR CLARITY. SEE PANEL SCHEDULES FOR CONNECTION INFO.
2. ALPHABETIC HEX NOTES INDICATE LIGHTING FIXTURE TYPE. SEE LIGHTING FIXTURE SCHEDULE FOR ADDITIONAL INFORMATION.
3. SUPPORT AND SECURE ALL NEW OVERHEAD ELECTRICAL CONDUIT TO PRIMARY STRUCTURAL ELEMENTS. SEE ELECTRICAL DETAILS.
4. PROVIDE ALL LIGHT FIXTURES AND LIGHTING CONTROLS FOR A COMPLETE OPERATING SYSTEM.

KEYNOTES

1. ANCHOR FIXTURE PER DETAILS ON SHEET E503.

SHEET SPECIAL SYMBOLS

- W3 — CORNER MOUNT LOW VOLTAGE OCCUPANCY SENSOR MOUNTED AT 8' ON WALL WATTSTOPPER LMPX-100
- D1 — LOW VOLTAGE DIMMING WALL SWITCH. WATTSTOPPER LMDM-101
- RC — 0-10 VOLT DIMMING ROOM CONTROLLER. WATTSTOPPER LMRC-210

2 / E106 **LIGHTING LAYOUT PLAN**

1/2"=1'-0" (0, 1', 2', 4')

6/27/14

GHD Inc.
1735 North First Street Suite 301 San Jose California 95112 USA
T 1 408 451 9615 F 1 408 451 9665
W www.ghd.com

DATE	REVISION	BY

CITY OF SANTA CLARA
WATER & SEWER UTILITIES

NORTHSIDE TANKS SITE IMPROVEMENTS PROJECT
VICINITY MAP, LOCATION MAP AND DRAWING INDEX

APPROVED DATE
DIRECTOR OF WATER & SEWER UTILITIES

PROJ. NO.	592-1423-80300-7054-(I)30148		
DESIGNED BY	NK	DRAWN BY	CF
CHECKED BY	AC	YEAR	2014
DATE	JULY 2014	BLK. BK. PG.	94
DRAWING NO.	G006	SHT.	38 OF 49
HORIZ.	NOTED	VERT.	–
		DWG. NO.	W-3143-4

Plot Date: 24 June 2014 - 12:17 AM Plotted by: Ming Yee Cad File No: G:\11205 City of Santa Clara\8410306 Northside Tanks Piping Reconfig\06-CAD\Sheets\8410306 E106.dwg

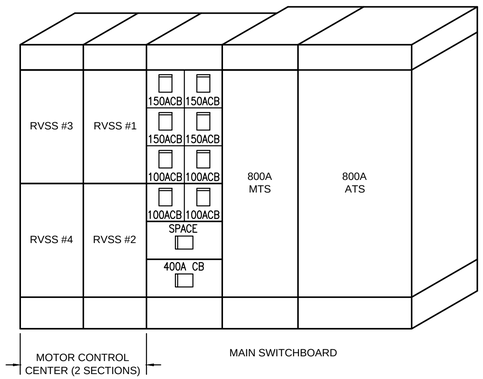

1 MAIN SWITCHBOARD AND MCC ELEVATION

NOT TO SCALE

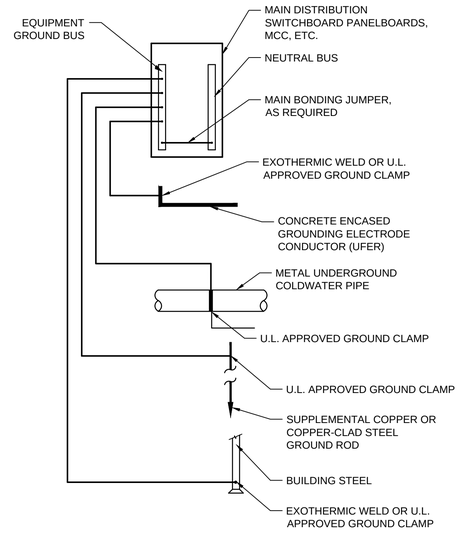

2 TYPICAL GROUNDING ELECTRODE SYSTEM

NOT TO SCALE

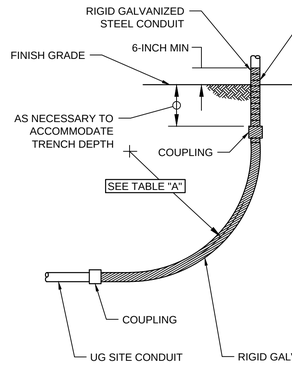

TABLE "A" - RGS

CONDUIT SIZE	MINIMUM ELBOW RADIUS REQUIREMENTS	
	RUNS 0-100 FEET	RUNS GREATER THAN 101 FEET
1/2-INCH	4-INCH	4-INCH
3/4-INCH	4 1/2-INCH	4 1/2-INCH
1-INCH	5 3/4-INCH	5 3/4-INCH
1 1/4-INCH	7 1/4-INCH	7 1/4-INCH
1 1/2-INCH	8 1/4-INCH	8 1/4-INCH
2-INCH	9 1/2-INCH	9 1/2-INCH
2 1/2-INCH	10 1/2-INCH	11 7/16-INCH
3-INCH	13-INCH	13 3/4-INCH
4-INCH	16-INCH	18 1/4-INCH
5-INCH	24-INCH	-
6-INCH	30-INCH	-

3 CONDUIT STUB UP

NOT TO SCALE

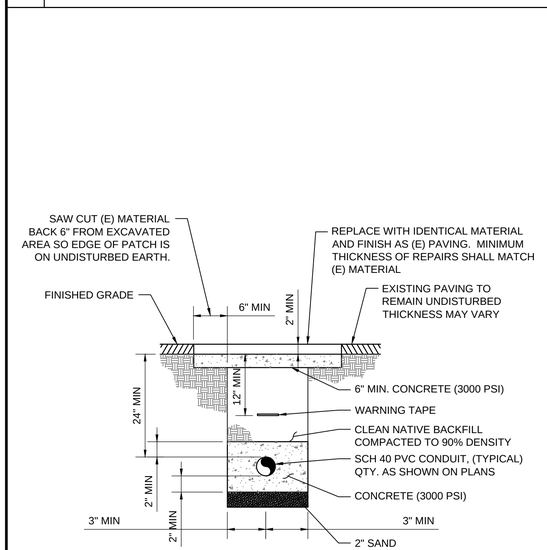

4 BURIED CONDUIT IN VEHICLE TRAFFIC AREAS

NOT TO SCALE

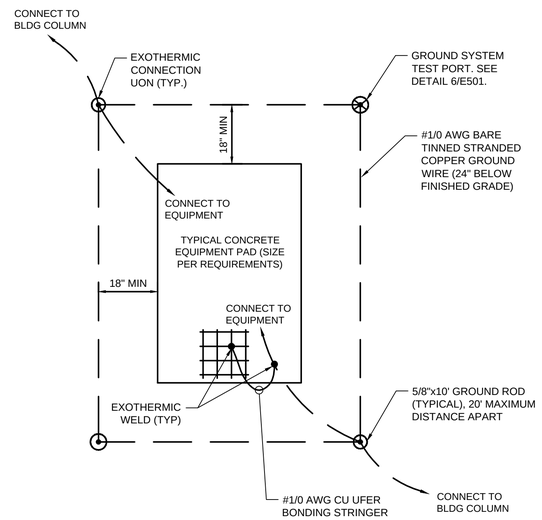

5 TYPICAL EQUIPMENT GROUNDING DETAIL

NOT TO SCALE

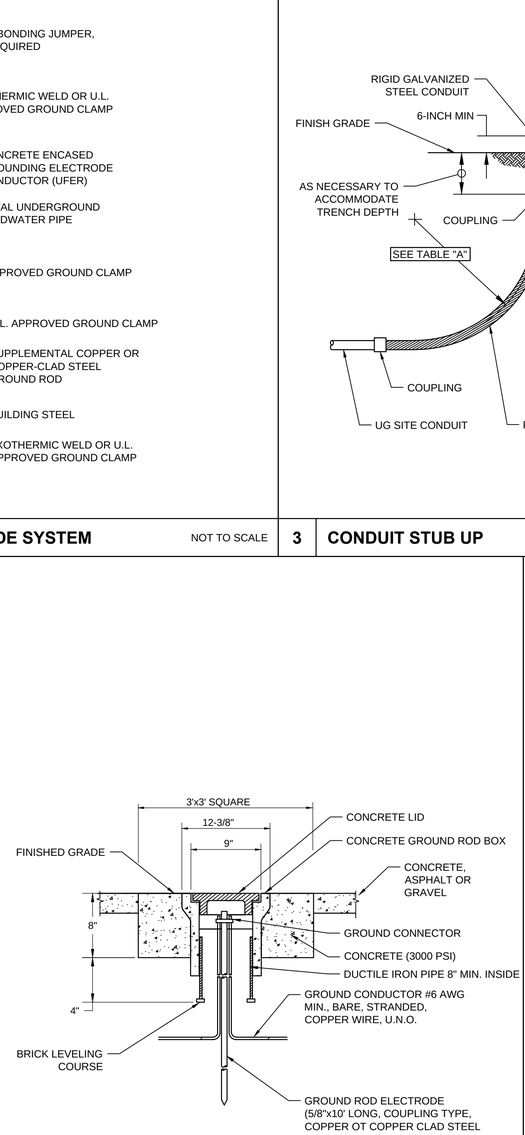

6 TYPICAL TRAFFIC RATED GROUND ROD AND BOX

NOT TO SCALE

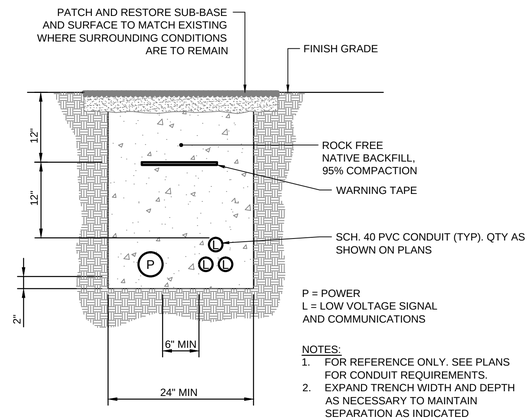

7 TYPICAL TRENCH DETAIL

GHD Inc.
1735 North First Street Suite 301 San Jose California 95112 USA
T 1 408 451 9615 F 1 408 451 9665
W www.ghd.com

DATE	REVISION	BY

CITY OF SANTA CLARA
WATER & SEWER UTILITIES

NORTHSIDE TANKS SITE IMPROVEMENTS PROJECT
ELECTRICAL DETAILS 1

APPROVED DATE
DIRECTOR OF WATER & SEWER UTILITIES

PROJ. NO.	592-1423-80300-7054-(I)30148		
DESIGNED BY	NK	DRAWN BY	CF
CHECKED BY	AC	YEAR	2014
DATE	JULY 2014	BLK. BK. PG.	94
DRAWING NO.	E501	SHT. 39	OF 49
HORIZ.	NOTED	VERT. –	DWG. NO. W-3143-4

Plot Date: 24 June 2014 - 12:17 AM Plotted by: Ming Yee Cad File No: G:\11205 City of Santa Clara\8410306 Northside Tanks Piping Reconfig\06-CAD\Sheets\8410306 E501.dwg

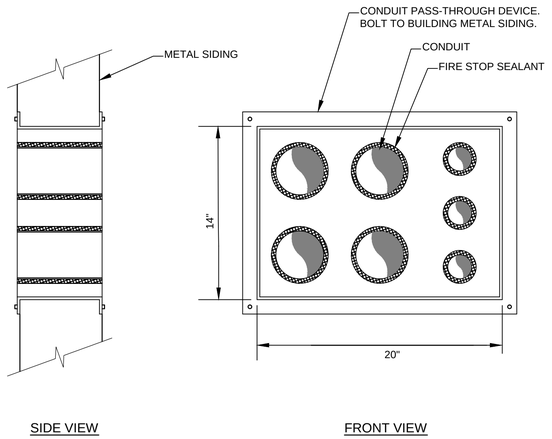

1 BUILDING PENETRATION DETAIL NOT TO SCALE

NOTES:
1. PROVIDE AND INSTALL SEISMIC ANCHORING USING HILTI HIT-HY 150 MAX-SD EPOXY ANCHORING SYSTEM OR APPROVED EQUAL AND PER MANUFACTURERS INSTALLATION PROCEDURES.

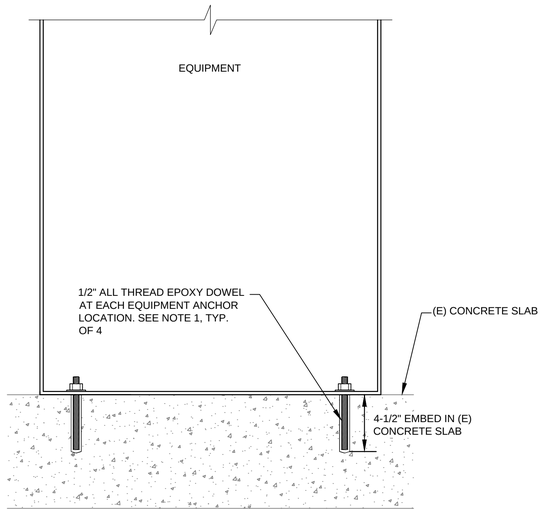

2 TYPICAL SEISMIC ANCHORING FOR ELECTRICAL PANELS NOT TO SCALE

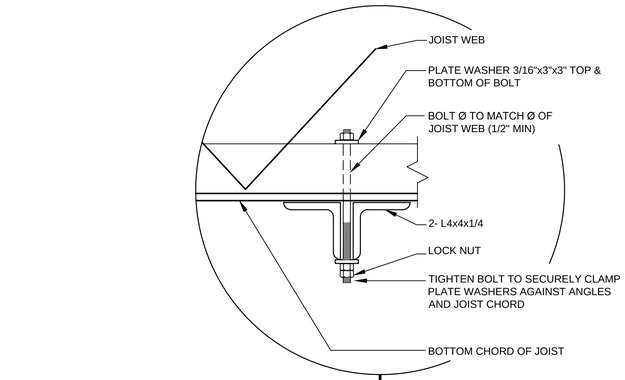

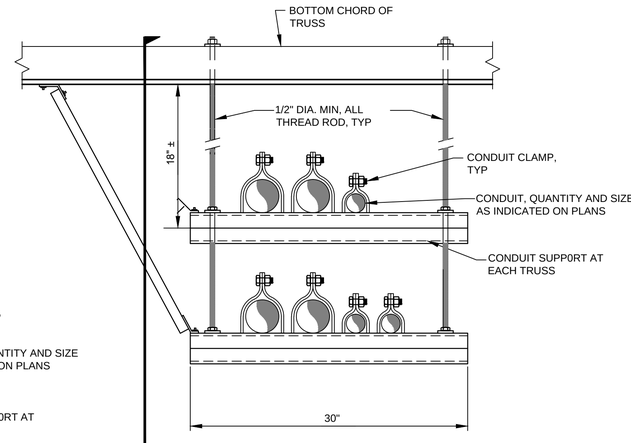

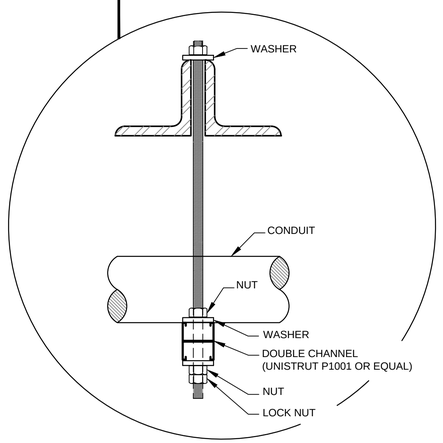

3 TYPICAL CONDUIT HANGER

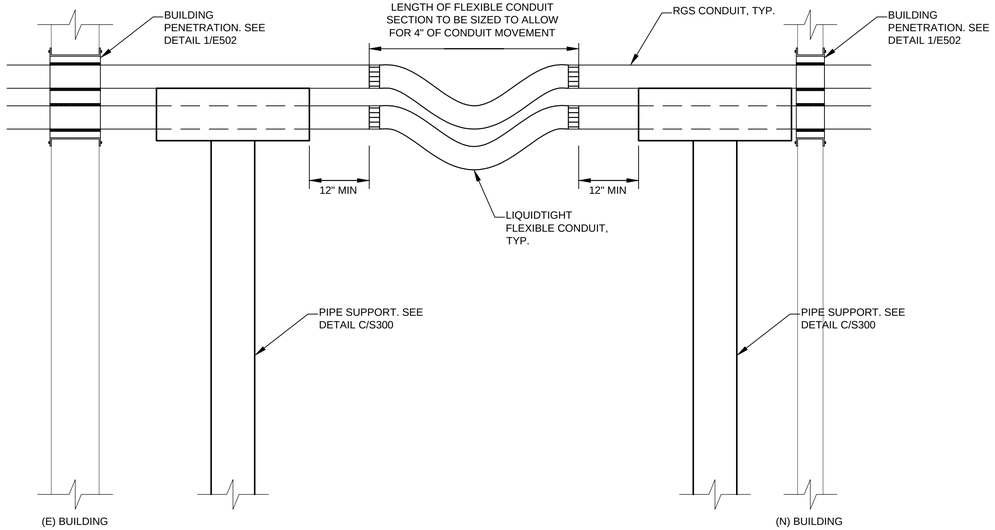

4 CONDUIT SUPPORT BETWEEN BULDINGS DETAIL NOT TO SCALE

GHD Inc.
1735 North First Street Suite 301 San Jose California 95112 USA
T 1 408 451 9615 F 1 408 451 9665
W www.ghd.com

DATE	REVISION	BY

CITY OF SANTA CLARA
WATER & SEWER UTILITIES

NORTHSIDE TANKS SITE IMPROVEMENTS PROJECT
ELECTRICAL DETAILS 2

APPROVED DATE
DIRECTOR OF WATER & SEWER UTILITIES

PROJ. NO.	592-1423-80300-7054-(I)30148		
DESIGNED BY	NK	DRAWN BY	CF
CHECKED BY	AC	YEAR	2014
DATE	JULY 2014	BLK. BK. PG.	94
DRAWING NO.	E502	SHT. 40	OF 49
HORIZ.	NOTED	VERT. –	DWG. NO. W-3143-4

Plot Date: 24 June 2014 - 12:17 AM Plotted by: Ming Yee Cad File No: G:\11205 City of Santa Clara\8410306 Northside Tanks Piping Reconfig\06-CAD\Sheets\8410306 E502.dwg

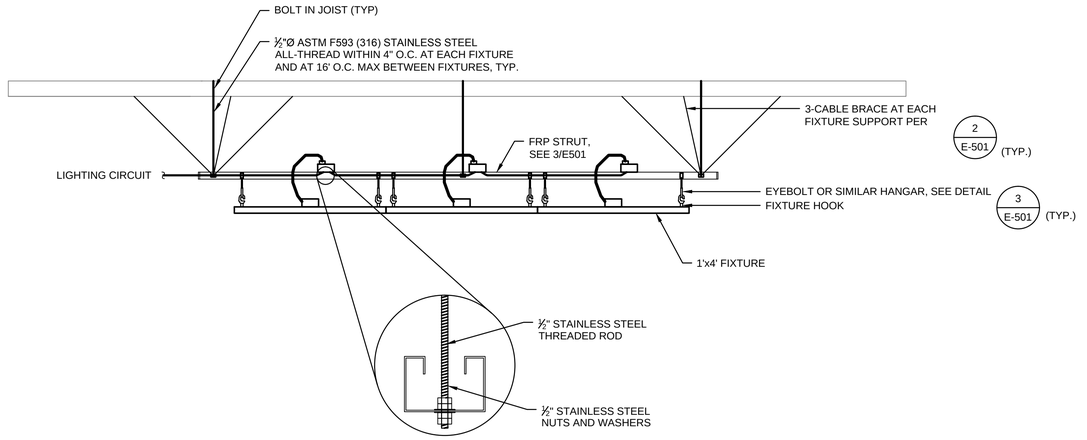

1 FIXTURE MOUNTING DETAIL NOT TO SCALE

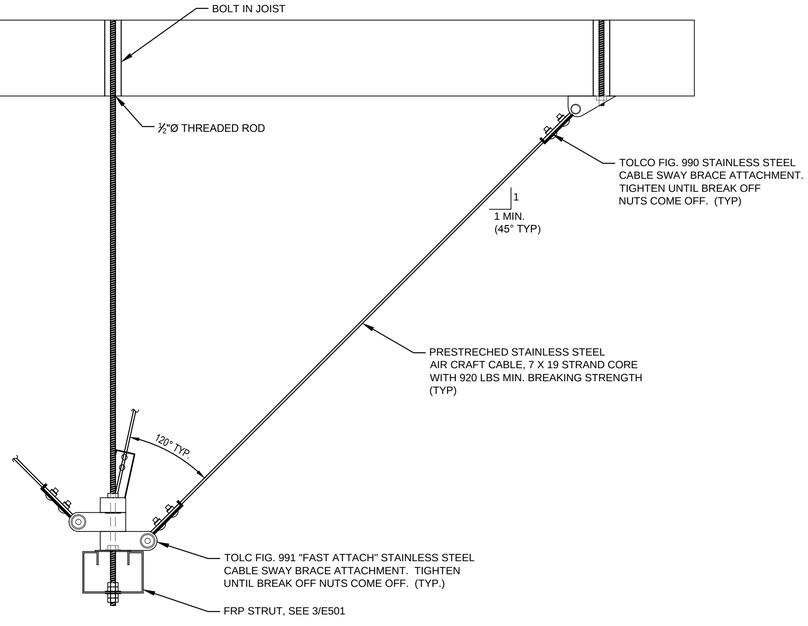

2 3 CABLE STRUT MOUNTING DETAIL NOT TO SCALE

3 FIXTURE HANGAR DETAIL

GHD Inc.
1735 North First Street Suite 301 San Jose California 95112 USA
T 1 408 451 9615 **F** 1 408 451 9665
W www.ghd.com

DATE	REVISION	BY

CITY OF SANTA CLARA
WATER & SEWER UTILITIES

NORTHSIDE TANKS SITE IMPROVEMENTS PROJECT
ELECTRICAL DETAILS 3

APPROVED DATE
DIRECTOR OF WATER & SEWER UTILITIES

PROJ. NO.	592-1423-80300-7054-(I)30148		
DESIGNED BY	NK	DRAWN BY	CF
CHECKED BY	AC	YEAR	2014
DATE	JULY 2014	BLK. BK. PG.	94
DRAWING NO.	E503	SHT. 41	OF 49
HORIZ.	NOTED	VERT. –	DWG. NO. W-3143-4

Plot Date: 24 June 2014 - 12:17 AM Plotted by: Ming Yee Cad File No: G:\11205 City of Santa Clara\8410306 Northside Tanks Piping Reconfig\06-CAD\Sheets\8410306 E503.dwg

SHEET GENERAL NOTES

1. DIAGRAM IS NOT INTENDED TO INDICATE ALL CONNECTIONS OR HARWARE AND IS INTENDED TO CONVEY DESIGN INTENT ONLY.
2. SIZE ALL SYSTEM COMPONENTS BASED ON SYSTEM CONNECTED LOADS.
3. PROVIDE AND CONFIGURE ALL CONNECTIONS, DEVICES AND COMPONENTS AS REQUIRED FOR A FULLY FUNCTIONAL SYSTEM.

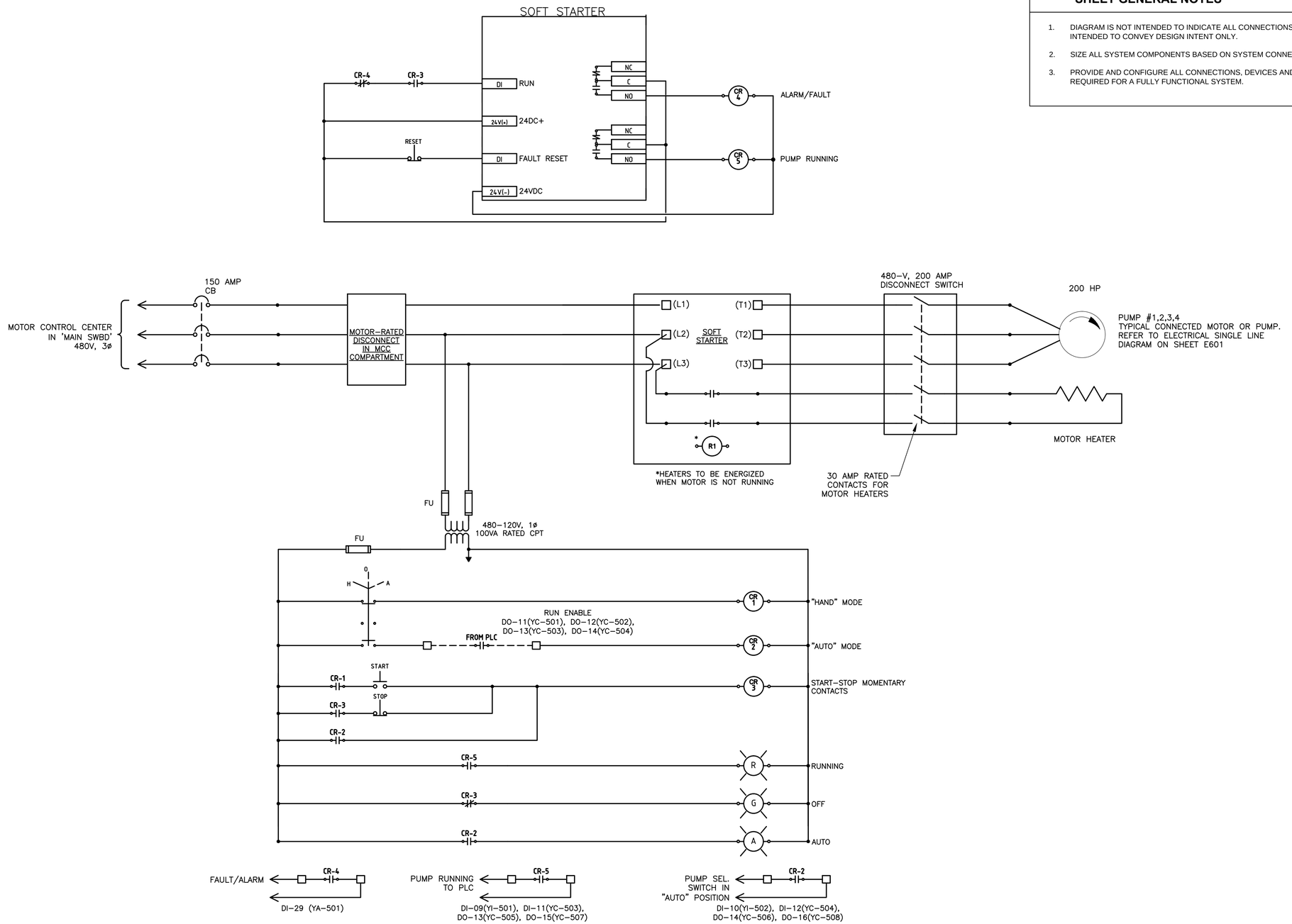

TYPICAL PUMP CONTROL DIAGRAM

GHD Inc.
1735 North First Street Suite 301 San Jose California 95112 USA
T 1 408 451 9615 F 1 408 451 9665
W www.ghd.com

DATE	REVISION	BY

CITY OF SANTA CLARA
WATER & SEWER UTILITIES

NORTHSIDE TANKS SITE IMPROVEMENTS PROJECT
ELECTRICAL DETAILS 4

APPROVED DATE
DIRECTOR OF WATER & SEWER UTILITIES

PROJ. NO.	592-1423-80300-7054-(I)30148		
DESIGNED BY	NK	DRAWN BY	CF
CHECKED BY	AC	YEAR	2014
DATE	JULY 2014	BLK. BK. PG.	94
DRAWING NO.	E504	SHT. 42	OF 49
HORIZ.	NOTED	VERT. –	DWG. NO. W-3143-4

Plot Date: 24 June 2014 - 12:18 AM Plotted by: Ming Yee Cad File No: G:\11205 City of Santa Clara\8410306 Northside Tanks Piping Reconfig\06-CAD\Sheets\8410306 E504.dwg

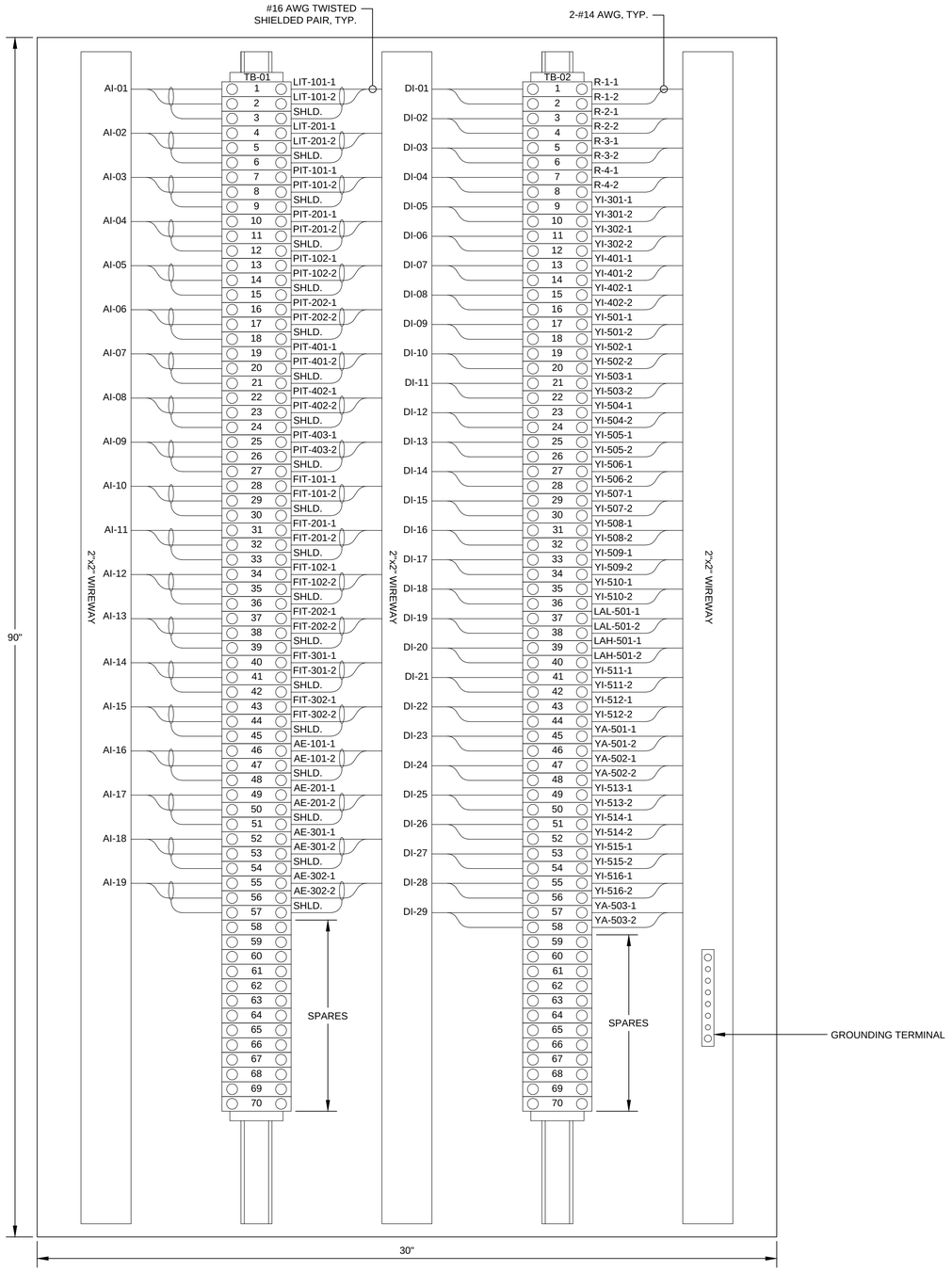

1 TERMINAL CABINET 1 DETAIL

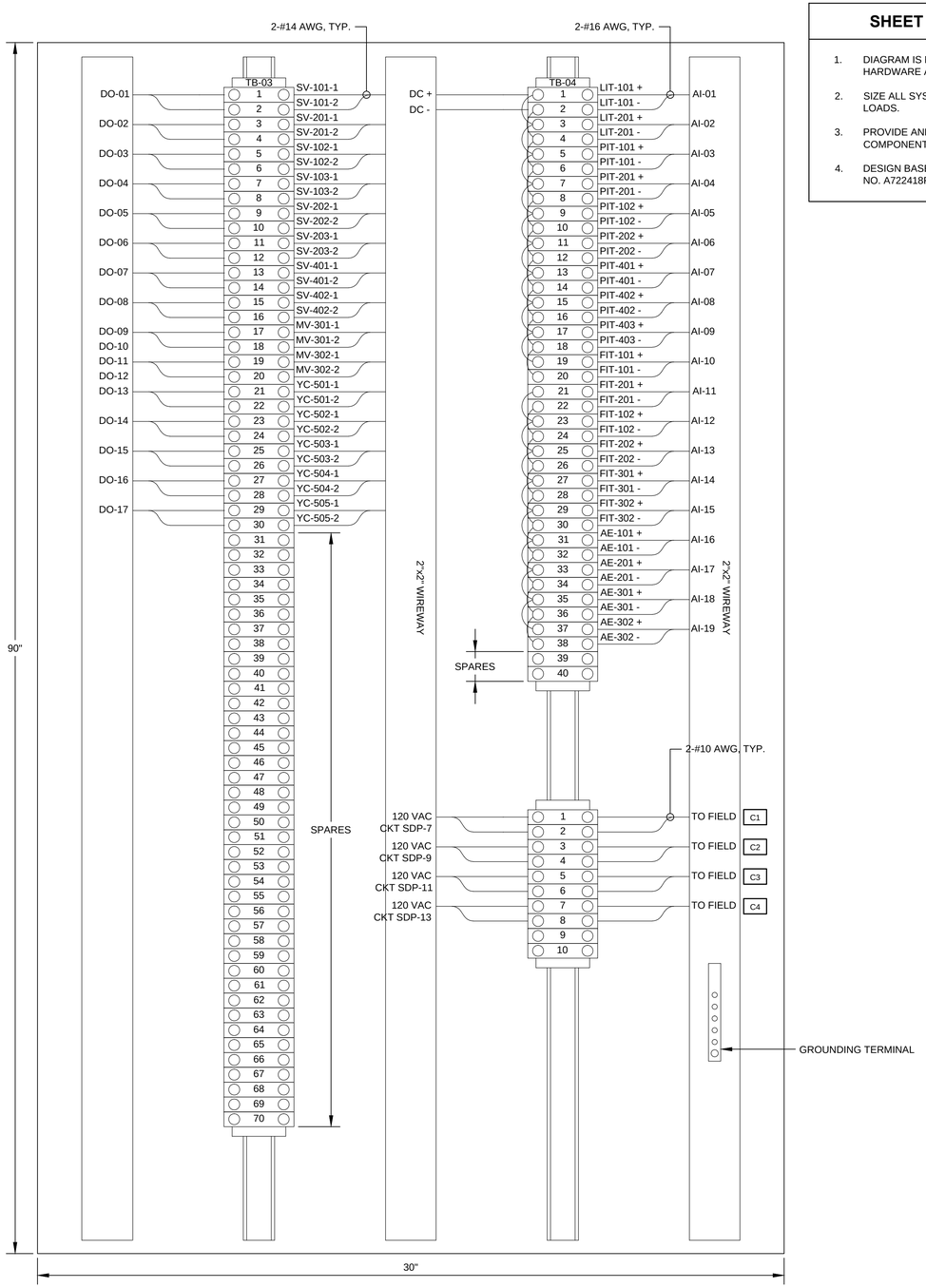

2 TERMINAL CABINET 2 DETAIL

SHEET GENERAL NOTES

1. DIAGRAM IS NOT INTENDED TO INDICATE ALL CONNECTIONS OR HARDWARE AND IS INTENDED TO CONVEY DESIGN INTENT ONLY.
2. SIZE ALL SYSTEM COMPONENTS BASED ON SYSTEM CONNECTED LOADS.
3. PROVIDE AND CONFIGURE ALL CONNECTIONS, DEVICES AND COMPONENTS AS REQUIRED FOR A FULLY FUNCTIONAL SYSTEM.
4. DESIGN BASED ON HOFFMAN FREE-STANDING ENCLOSURE MODEL NO. A722418FSG NEMA 12, 72"x24"x18" WITH BACKPANEL.

GHD Inc.
1735 North First Street Suite 301 San Jose California 95112 USA
T 1 408 451 9615 F 1 408 451 9665
W www.ghd.com

DATE	REVISION	BY

CITY OF SANTA CLARA
WATER & SEWER UTILITIES

NORTHSIDE TANKS SITE IMPROVEMENTS PROJECT
ELECTRICAL DETAILS 4

APPROVED DATE
DIRECTOR OF WATER & SEWER UTILITIES

PROJ. NO.	592-1423-80300-7054-(I)30148		
DESIGNED BY	NK	DRAWN BY	CF
CHECKED BY	AC	YEAR	2014
DATE	JULY 2014	BLK. BK. PG.	94
DRAWING NO.	E505	SHT. 43	OF 49
HORIZ.	NOTED	VERT. –	DWG. NO. W-3143-4

Plot Date: 24 June 2014 - 12:18 AM Plotted by: Ming Yee Cad File No: G:\11205 City of Santa Clara\8410306 Northside Tanks Piping Reconfig\06-CAD\Sheets\8410306 E505.dwg

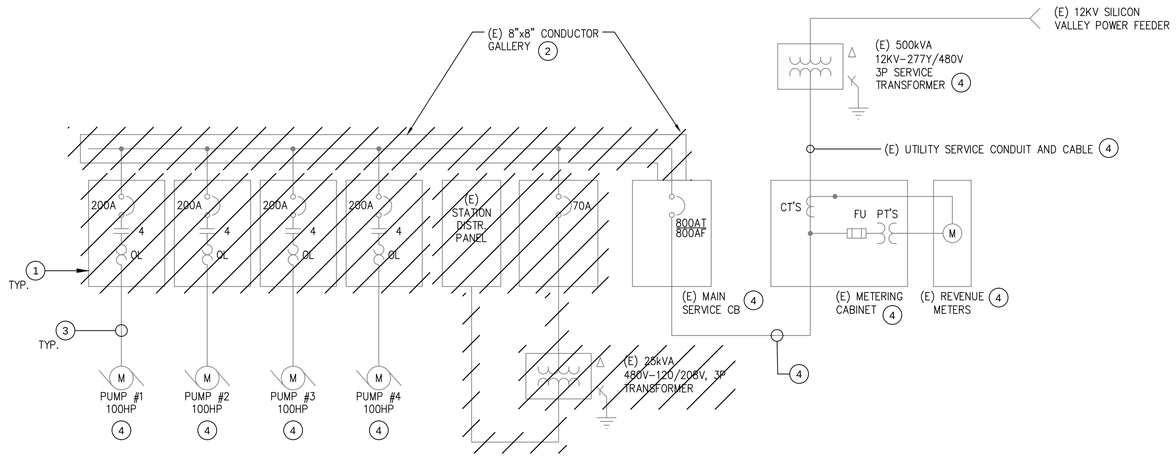

SINGLE-LINE DIAGRAM - DEMOLITION

DEMOLITION NOTES

1. REMOVE CIRCUIT BREAKER, CONTACTOR AND OVERLOADS FROM (E) CABINET.
2. REMOVE (E) CABLES AND (E) RACEWAY AS INDICATED.
3. REMOVE (E) CABLES. PROTECT AND RETAIN UNDERGROUND CONDUIT FOR REUSE.
4. (E) ELECTRICAL EQUIPMENT TO REMAIN.

KEYNOTES

1. PROVIDE AND INSTALL (N) AUTOMATIC TRANSFER SWITCH, MANUAL TRANSFER SWITCH, MAIN SWITCHBOARD WITH CIRCUIT BREAKERS, MOTOR CONTROL CENTER AND REDUCED VOLTAGE SOFT STARTERS (RVSS) AS INDICATED ON DRAWINGS AND SPECIFICATIONS.
2. PROVIDE AND INSTALL (N) 480-V, 200 AMP, 3 POLE HEAVY-DUTY, MOTOR-RATED DISCONNECT IN (E) STARTER ENCLOSURE AS LOCAL MOTOR DISCONNECTING MEANS.
3. PROVIDE AND INSTALL (N) CABLES IN (E) CONDUIT. SWAB AND PROVE CONDUIT PRIOR TO INSTALLING (N) CABLES.
4. PROVIDE AND INSTALL (N) TRANSFORMER, PANEL BOARDS, CONDUIT AND CABLE. SEE DRAWING E501 FOR PANEL SCHEDULES.
5. PROVIDE AND INSTALL (2) SETS OF CAMLOCK CONNECTORS (TOTAL 400 AMP RATING) IN NEMA 3R ENCLOSURE FOR CONNECTING PORTABLE GENERATOR.
6. RE-ROUTE (E) SILICON VALLEY POWER 15KV SERVICE FEEDER. SEE ATTACHED SHEET E002 FOR MORE INFORMATION.
7. PROVIDE STANDBY ENGINE GENERATOR WITH SUB-BASE DIESEL FUEL TANK, EXHAUST MUFFLER, SEISMIC TIE-DOWNS AND ALL OTHER APPURTENANCES REQUIRED FOR A COMPLETE AND OPERATIONAL STANDBY POWER SYSTEM. SEE SINGLE LINE DIAGRAM FOR RATINGS AND CONNECTION INFORMATION.

SHEET SPECIAL SYMBOLS

XX CONDUIT IDENTIFICATION TAG. REFERENCE SHEET E602

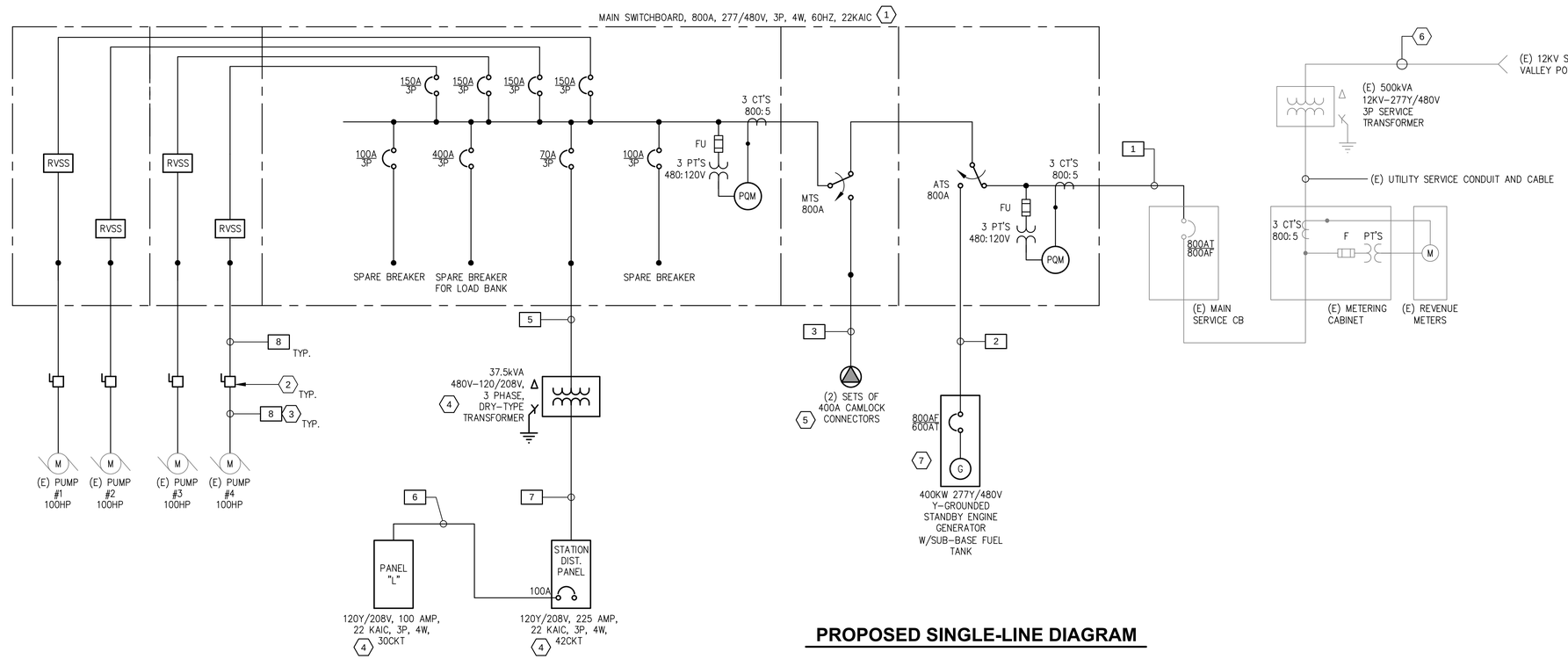

PROPOSED SINGLE-LINE DIAGRAM

GHD Inc.
1735 North First Street Suite 301 San Jose California 95112 USA
T 1 408 451 9615 F 1 408 451 9665
W www.ghd.com

DATE	REVISION	BY

CITY OF SANTA CLARA
WATER & SEWER UTILITIES

NORTHSIDE TANKS SITE IMPROVEMENTS PROJECT
ELECTRICAL SINGLE LINE DIAGRAMS

APPROVED DATE
DIRECTOR OF WATER & SEWER UTILITIES

PROJ. NO.	592-1423-80300-7054-(I)30148		
DESIGNED BY	NK	DRAWN BY	CF
CHECKED BY	AC	YEAR	2014
DATE	JULY 2014	BLK. BK. PG.	94
DRAWING NO.	E601	SHT. 44	OF 49
HORIZ.	NOTED	VERT. –	DWG. NO. W-3143-4

Plot Date: 24 June 2014 - 12:18 AM Plotted by: Ming Yee Cad File No: G:\11205 City of Santa Clara\8410306 Northside Tanks Piping Reconfig\06-CAD\Sheets\8410306 E601.dwg

CONDUIT AND CABLE SCHEDULES

POWER

NO.	FROM	TO	CONDUIT SIZE	CABLE SIZE (600-V, CU, THHN/THWN CONDUCTORS)	REMARKS
1	MAIN SERVICE CB	MAIN SWBD	2-4" RGS	4-500KCMIL, 1-#2 AWG GND IN EACH CONDUIT	
2	STANDBY GENERATOR	ATS	2-4" RGS	4-500KCMIL, 1-#2 AWG GND IN EACH CONDUIT	
3	MTS	CAMLOCK CONNECTORS	2-4" RGS	4-500KCMIL, 1-#2 AWG GND IN EACH CONDUIT	
4	-	-	-	-	TAG NOT USED
5	MAIN SWBD	37.5 kVA XFMR	1-1/4" RGS	3-#2 AWG, 1-#8 AWG GND	
6	STATION DIST. PANEL	PANEL L	1-1/2" RGS	4-#1/0 AWG, 1-#6 AWG GND	
7	37.5 kVA XFMR	STATION DIST. PANEL	1-1/4" RGS	3-#2 AWG, 1-#8 AWG GND	
8	MCC	PUMP MOTOR	2" RGS	3-#2/0 AWG, #6 AWG GND AND 2-#12 AWG	MOTOR AND MOTOR HEATER CIRCUITS
9	STATION DIST. PANEL	CONTROL DEVICES IN FIELD	2"	2-#10 AWG, #12 AWG GND	COMMON CIRCUIT TO NEAREST MANHOLE THEN DISTRIBUTE TO EACH DEVICE
10	STATION DIST. PANEL	INSTRUMENTATION CABINET	2"	2-#12 AWG, #12 AWG GND	
11	STATION DIST. PANEL	PUMP 1 BETWEEN TANKS	2"	3-#12 AWG, #12 AWG GND	
12	STATION DIST. PANEL	PUMP 2 BETWEEN TANKS	2"	3-#12 AWG, #12 AWG GND	
13	STATION DIST. PANEL	PUMP METER VAULT A	2"	3-#12 AWG, #12 AWG GND	
14	STATION DIST. PANEL	PUMP METER VAULT B	2"	3-#12 AWG, #12 AWG GND	

CONTROLS

NO.	FROM	TO	CONDUIT REQUIRED	CABLE QTY AND TYPE	REMARKS
C1	TERMINATION CABINET	MH-CTRL-1	2"	(20) 2-#16 AWG TWISTED SHIELDED PAIR 2-#10 AWG, #12 AWG GND	ANALOG & DIGITAL CONTROLS, POWER
C2	TERMINATION CABINET	MH-CTRL-2	2"	(20) 2-#16 AWG TWISTED SHIELDED PAIR 2-#10 AWG, #12 AWG GND	ANALOG & DIGITAL CONTROLS, POWER
C3	TERMINATION CABINET	MH-CTRL-3	2"	(15) 2-#16 AWG TWISTED SHIELDED PAIR 2-#10 AWG, #12 AWG GND	ANALOG & DIGITAL CONTROLS, POWER
C4	TERMINATION CABINET	MH-CTRL-4	2"	(15) 2-#16 AWG TWISTED SHIELDED PAIR 2-#10 AWG, #12 AWG GND	ANALOG & DIGITAL CONTROLS, POWER
C5	NEAREST MH	DEVICE CLUSTER	2"	(3) 2-#16 AWG TWISTED SHIELDED PAIR 2-#10 AWG, #12 AWG GND	ANALOG & DIGITAL CONTROLS, POWER
C6	NEAREST MH	DEVICE CLUSTER	2"	(5) 2-#16 AWG TWISTED SHIELDED PAIR 2-#10 AWG, #12 AWG GND	ANALOG & DIGITAL CONTROLS, POWER
C7	NEAREST MH	DIGITAL CONTROL DEVICE	2"	(1) 2-#16 AWG TWISTED SHIELDED PAIR 2-#10 AWG, #12 AWG GND	DIGITAL CONTROLS POWER
C8	NEAREST MH	ANALOG CONTROL DEVICE	2"	(2) 2-#16 AWG TWISTED SHIELDED PAIR	ANALOG & DIGITAL CONTROLS
C9	TERMINATION CABINET	MH-CTRL-5	2"	(10) 2-#16 AWG TWISTED SHIELDED PAIR	ANALOG & DIGITAL CONTROLS
C10	TERMINATION CABINET	(E) SCADA CABINET	2-2"	EMPTY WITH PULL ROPE	
C11	TERMINATION CABINET	(E) SCADA CABINET	1-2"	EMPTY WITH PULL ROPE	
C12	STANDBY GENERATOR	TERMINATION CABINET	1-2"	GENERATOR CONTROL WIRES	
C13	ATS	TERMINATION CABINET	1-2"	ATS CONTROL WIRES	
C14	JBOX IN PUMP BUILDING	JBOX IN GEN BUILDING	1-2"	EMPTY WITH PULL ROPE	PROVISION FOR TEL/DATA

LIGHTING FIXTURE SCHEDULE

TAG	FIXTURE DESCRIPTION	MANUFACTURER	MODEL	LAMP	FIXTURE INPUT WATTS	MOUNTING	NOTES
A	EDGE-LIT LED FLAT PANEL WITH INTEGRAL DRIVER. 5000K COLOR TEMPERATURE. 50,000 HOUR L70 LIFE.	MAXLITE	MLFP14E4550	LED	45	CABLE HUNG WITH MLCHKSQ KIT	90 LUMENS/WATT. PROVIDE WITH SEISMIC BRACING AND UTILITY WRAP WIRE GUARD.
B	RUGED DIE CAST LED WALL-PACK. ALUMINIUM HOUSING AND POLYCARBONATE PRISMATIC LENS. INTEGRAL PHOTOCEL CONTROL.	COOPER	LDWP-PL-2A-ED-PE120	LED	22	RECESSED	PHOTOCELL CONTROLED
X	EDGE-LIT LED EXIT SIGN	LITHONIA	EDG 1 R EL	LED	2.5	SURFACE	

PANEL SCHEDULE

PANEL NAME: **STATION DIST PANEL** VOLTAGE: 208/120 NEMA RATING: 1 NOTES:
MAINS RATING: 225 A MCB PHASE: 3 AIC RATING: 22K MOUNTING: SURFACE
BUS RATING: 225 A WIRE: 4 DEMAND FACTOR: STD LOCATION: PUMP BUILDING

CKT NO.	USE	DESCRIPTION	BKR SIZE	BKR OPTS	BKR KVA	PHASE	BKR KVA	BKR OPTS	BKR SIZE	DESCRIPTION	USE	CKT NO.
1	O	PANEL L	100/3		0.20	A	0.40		20/1	LIGHTING	L	2
3	O		--		0.20	B	0.02		20/1	RECEPTS	R	4
5	O		--		0.20	C	0.20		20/1	INSTRUMENTATION CABINET	O	6
7	O	I/O TERMINATION CABINET	20/1		0.10	A	0.20		20/3	PUMP 1 BETWEEN TANKS	M	8
9	O	I/O TERMINATION CABINET	20/1		0.10	B	0.20		-	-	M	10
11	O	I/O TERMINATION CABINET	20/1		0.10	C	0.20		-	-	M	12
13	O	I/O TERMINATION CABINET	20/1		0.10	A	0.20		20/3	PUMP 2 BETWEEN TANKS	M	14
15		*EXISTING CIRCUIT*				B	0.20		-	-	M	16
17		*EXISTING CIRCUIT*				C	0.20		-	-	M	18
19		*EXISTING CIRCUIT*				A	0.20		20/3	PUMP METER VAULT A	M	20
21		*EXISTING CIRCUIT*				B	0.20		-	-	M	22
23		*EXISTING CIRCUIT*				C	0.20		-	-	M	24
25		*EXISTING CIRCUIT*				A	0.20		20/3	PUMP METER VAULT B	M	26
27		*EXISTING CIRCUIT*				B	0.20		-	-	M	28
29		*EXISTING CIRCUIT*				C	0.20		-	-	M	30
31		*EXISTING CIRCUIT*				A				*EXISTING CIRCUIT*		32
33		*EXISTING CIRCUIT*				B				*EXISTING CIRCUIT*		34
35		*EXISTING CIRCUIT*				C				*EXISTING CIRCUIT*		36
37		*EXISTING CIRCUIT*				A			20/1	SPARE		38
39		*EXISTING CIRCUIT*				B			20/1	SPARE		40
41		*EXISTING CIRCUIT*				C			20/1	SPARE		42

CONNECTED KVA		DEMAND KVA	DEMAND AMPS
PHASE A:	1.6	1.8	14.6
PHASE B:	1.1	1.2	9.7
PHASE C:	1.3	1.4	11.3

STD DEMAND LOAD BASED ON 125% OF THE LARGEST MOTOR AND 100% OF THE REMAINING MOTORS, 125% OF CONTINUOUS LOADS, 100% OF NONCONTINUOUS LOADS, AND 50% OF RECEPTACLE LOADS BEYOND THE FIRST 10KVA

USE LEGEND	LOAD TYPE
H	HVAC
L	LIGHTING
M	MOTOR
O	OTHER
R	RECEPTACLE
P	PANEL

BREAKER OPTIONS
GFCI - GROUND FAULT CIRCUIT INTERRUPTER
LO - LOCK-ON DEVICE
PA - PADLOCK ATTACHMENT
ST - SHUNT TRIP

3-PHASE DEMAND LOAD SUMMARY	CONN. KVA	DEMAND FACTOR	DEMAND KVA
TYPE "M": MOTOR. LOADS (LARGEST MOTOR)	0.60	125%	0.75
TYPE "M": MOTOR. LOADS (REMAINING)	1.80	100%	1.80
TYPE "L": LIGHTING LOADS	0.40	125%	0.50
TYPE "R": RECEPTACLES (FIRST 10KVA)	0.02	100%	0.02
TYPE "R": RECEPTACLES (OVER 10KVA)		50%	
TYPE "H": HVAC LOADS		100%	
TYPE "P": PANEL LOADS		100%	
TYPE "O": OTHER LOADS	1.20	100%	1.20
		DEMAND KVA:	4.27
		DEMAND AMPS:	11.9

PANEL SCHEDULE

PANEL NAME: **PANEL L** VOLTAGE: 208/120 NEMA RATING: 1 NOTES:
MAINS RATING: 100 A MCB PHASE: 3 AIC RATING: 22K MOUNTING: SURFACE
BUS RATING: 100 A WIRE: 4 DEMAND FACTOR: STD LOCATION: GENERATOR BUILDING

CKT NO.	USE	DESCRIPTION	BKR SIZE	BKR OPTS	BKR KVA	PHASE	BKR KVA	BKR OPTS	BKR SIZE	DESCRIPTION	USE	CKT NO.
1	L	LIGHTING	20/1		0.41	A	2.00		30/3	WATER HEATER EWH-1	H	2
3	R	INDOOR RECEPTS	20/1		0.05	B	2.00		--		H	4
5	R	OUTDOOR RECEPTS	20/1	GFCI	0.05	C	2.00		--		H	6
7		SPARE	20/1			A	0.03		20/1	EXHAUST FAN EF-1	H	8
9		SPARE	20/1			B			20/1	SPARE		10
11		SPARE	20/1			C			20/1	SPARE		12
13		SPARE	20/1			A			20/1	SPARE		14
15		SPARE	20/1			B			20/1	SPARE		16
17		SPARE	20/1			C			20/1	SPARE		18
19		SPARE	20/1			A			20/1	SPARE		20
21		SPARE	20/1			B			20/1	SPARE		22
23		SPARE	20/1			C			20/1	SPARE		24
25	O	BLOCK HEATER	20/2		0.10	A			20/1	SPARE		26
27	O		--		0.10	B			20/1	SPARE		28
29	L	EXT LIGHTS AND EXITS	20/1		0.07	C	0.10		20/1	BATTERY CHARGER	O	30

CONNECTED KVA		DEMAND KVA	DEMAND AMPS
PHASE A:	2.5	2.6	22.0
PHASE B:	2.2	2.2	18.0
PHASE C:	2.2	2.2	18.7

STD DEMAND LOAD BASED ON 125% OF THE LARGEST MOTOR AND 100% OF THE REMAINING MOTORS, 125% OF CONTINUOUS LOADS, 100% OF NONCONTINUOUS LOADS, AND 50% OF RECEPTACLE LOADS BEYOND THE FIRST 10KVA

USE LEGEND	LOAD TYPE
H	HVAC
L	LIGHTING
M	MOTOR
O	OTHER
R	RECEPTACLE
P	PANEL

BREAKER OPTIONS
GFCI - GROUND FAULT CIRCUIT INTERRUPTER
LO - LOCK-ON DEVICE
PA - PADLOCK ATTACHMENT
ST - SHUNT TRIP

3-PHASE DEMAND LOAD SUMMARY	CONN. KVA	DEMAND FACTOR	DEMAND KVA
TYPE "M": MOTOR. LOADS (LARGEST MOTOR)		125%	
TYPE "M": MOTOR. LOADS (REMAINING)		100%	
TYPE "L": LIGHTING LOADS	0.48	125%	0.60
TYPE "R": RECEPTACLES (FIRST 10KVA)	0.11	100%	0.11
TYPE "R": RECEPTACLES (OVER 10KVA)		50%	
TYPE "H": HVAC LOADS	6.03	100%	6.03
TYPE "P": PANEL LOADS		100%	
TYPE "O": OTHER LOADS	0.30	100%	0.30
		DEMAND KVA:	7.03
		DEMAND AMPS:	19.5

GHD Inc.
1735 North First Street Suite 301 San Jose California 95112 USA
T 1 408 451 9615 **F** 1 408 451 9665
W www.ghd.com

DATE	REVISION	BY

CITY OF SANTA CLARA
WATER & SEWER UTILITIES

NORTHSIDE TANKS SITE IMPROVEMENTS PROJECT
ELECTRICAL SCHEDULES

APPROVED DATE
DIRECTOR OF WATER & SEWER UTILITIES

PROJ. NO.	592-1423-80300-7054-(I)30148		
DESIGNED BY	NK	DRAWN BY	CF
CHECKED BY	AC	YEAR	2014
DATE	JULY 2014	BLK. BK. PG.	94
DRAWING NO.	E602	SHT. 45 OF	49
HORIZ. NOTED	VERT. -	DWG. NO.	W-3143-4

Plot Date: 24 June 2014 - 12:18 AM Plotted by: Ming Yee Cad File No: G:\11205 City of Santa Clara\8410306 Northside Tanks Piping Reconfig\06-CAD\Sheets\8410306 E602.dwg

INPUT / OUTPUT SCHEDULE

POINT NO.	DEVICE ID	TYPE OF SIGNAL	SENSING/CONTROLLING DEVICE	FUNCTION / CONTROLS	SCALE	POWER REQUIRED	TERMINATION POINT	REMARKS
AI-01	LIT-101	A-4 TO 20 mA	(E) LEVEL TRANSMITTER	TANK 1 - LEVEL INDICATION	FEET	10-30 VDC	TB-01-1/2/3	
AI-02	LIT-201	A-4 TO 20 mA	(E) LEVEL TRANSMITTER	TANK 2 - LEVEL INDICATION	TEET	10-30 VDC	TB-01-4/5/6	
AI-03	PIT-101	A-4 TO 20 mA	(E) PRESSURE TRANSMITTER	8-INCH ZONE 1A - PRESSURE INDICATION	PSI	10-30 VDC	TB-01-7/8/9	
AI-04	PIT-201	A-4 TO 20 mA	PRESSURE TRANSMITTER	12-INCH ZONE 1A - PRESSURE INDICATION	PSI	10-30 VDC	TB-01-10/11/12	
AI-05	PIT-102	A-4 TO 20 mA	(E) PRESSURE TRANSMITTER	8-INCH H. H. SUPPLY - PRESSURE INDICATION	PSI	10-30 VDC	TB-01-13/14/15	
AI-06	PIT-202	A-4 TO 20 mA	PRESSURE TRANSMITTER	12-INCH H. H. SUPPLY - PRESSURE INDICATION	PSI	10-30 VDC	TB-01-16/17/18	
AI-07	PIT-401	A-4 TO 20 mA	PRESSURE TRANSMITTER	6-INCH ZONE 1A to ZONE 1 UPSTREAM - PRESSURE INDICATION	PSI	10-30 VDC	TB-01-19/20/21	
AI-08	PIT-402	A-4 TO 20 mA	PRESSURE TRANSMITTER	6-INCH ZONE 1A to ZONE 1 DOWNSTREAM - PRESSURE INDICATION	PSI	10-30 VDC	TB-01-22/23/24	
AI-09	PIT-403	A-4 TO 20 mA	(E) PRESSURE TRANSMITTER	2-INCH RP SERVICE LINE BACKFLOW PREVENTOR - PRESSURE INDICATION	PSI	10-30 VDC	TB-01-25/26/27	
AI-10	FIT-101	A-4 TO 20 mA	(E) FLOW TRANSMITTER	8-INCH H. H. SUPPLY ZONE 1A - FLOW INDICATION	GPM	10-30 VDC	TB-01-28/29/30	
AI-11	FIT-201	A-4 TO 20 mA	(E) FLOW TRANSMITTER	12-INCH H. H. SUPPLY - FLOW INDICATION	GPM	10-30 VDC	TB-01-31/32/33	
AI-12	FIT-102	A-4 TO 20 mA	FLOW TRANSMITTER	8-INCH TO TANK 1 - FLOW INDICATION	GPM	10-30 VDC	TB-01-34/35/36	
AI-13	FIT-202	A-4 TO 20 mA	FLOW TRANSMITTER	12-INCH TO TANK 2 - FLOW INDICATION	GPM	10-30 VDC	TB-01-37/38/39	
AI-14	FIT-301	A-4 TO 20 mA	(E) FLOW TRANSMITTER	20-INCH TANKS TO PUMPS - FLOW INDICATION	GPM	10-30 VDC	TB-01-40/41/42	
AI-15	FIT-302	A-4 TO 20 mA	(E) FLOW TRANSMITTER	20-INCH ZONE 1 TO TANKS - FLOW INDICATION	GPM	10-30 VDC	TB-01-43/44/45	
AI-16	AE-101	A-4 TO 20 mA	TURBIDIMETER	H. H. SUPPLY 8-INCH - TURBIDITY ANALYZER	NTU	10-30 VDC	TB-01-46/47/48	
AI-17	AE-201	A-4 TO 20 mA	TURBIDIMETER	H. H. SUPPLY 12-INCH - TURBIDITY ANALYZER	NTU	10-30 VDC	TB-01-49/50/51	
AI-18	AE-301	A-4 TO 20 mA	CHLORINE ANALYZER	TANK 1 - CHLORINE ANALYZER	PPM	10-30 VDC	TB-01-52/53/54	
AI-19	AE-302	A-4 TO 20 mA	CHLORINE ANALYZER	TANK 2 - CHLORINE ANALYZER	PPM	10-30 VDC	TB-01-55/56/57	
DI-01	R-1	D-NO/NC	CONTACT IN ATS	MONITOR UTILITY VOLTAGE	STATUS	-	TB-02-1/2	ATS RELAY CONTACT "CLOSE" WHEN UTILITY POWER (120V) IS AVAILABLE
DI-02	R-2	D-NO/NC	CONTACT IN ATS	MONITOR LOAD SIDE (MCC) VOLTAGE	STATUS	-	TB-02-3/4	ATS RELAY CONTACT "CLOSE" WHEN LOAD (MCC) POWER (120V) IS AVAILABLE
DI-03	R-3	D-NO/NC	CONTACT IN ATS	MONITOR GENERATOR VOLTAGE	STATUS	-	TB-02-5/6	ATS RELAY CONTACT "CLOSE" WHEN EMER. GEN. POWER (120V) IS AVAILABLE
DI-04	R-4	D-NO/NC	CONTACT IN BATTERY CHARGER	MONITOR GENERATOR BATTERIES VOLTAGE	STATUS	-	TB-02-7/8	DC BATTERY LOW VOLTAGE ALARM CONTACT TO "OPEN"
DI-05	YI-301	D-NO/NC	CONTACT IN SUPPLY VALVE MV-301	MONITOR "OPEN-CLOSE" TANK 1 SUPPLY VALVE MV-301 TO PUMPS	STATUS	-	TB-02-9/10	DO-09 TO "OPEN-CLOSE" MOTORIZED VALVE MV-301 FROM PLC
DI-06	YI-302	D-NO/NC	CONTACT IN SUPPLY VALVE MV-302	MONITOR "OPEN-CLOSE" TANK 2 SUPPLY VALVE MV-302 TO PUMPS	STATUS	-	TB-02-11/12	DO-10 TO "OPEN-CLOSE" MOTORIZED VALVE MV-302 FROM PLC
DI-07	YI-401	D-NO/NC	CONTACT IN PRV SV-401	MONITOR "OPEN-CLOSE" 6-INCH PRV SV-401 ZONE 1A TO 1	STATUS	-	TB-02-13/14	DO-07 TO "CLOSE" SOLENOID VALVE SV-401 FROM PLC
DI-08	YI-402	D-NO/NC	CONTACT IN PRV SV-402	MONITOR "OPEN-CLOSE" 12-INCH PRV SV-402 ZONE 1A TO 1	STATUS	-	TB-02-15/16	DO-08 TO "CLOSE" SOLENOID VALVE SV-402 FROM PLC
DI-09	YI-501	D-NO/NC	CONTACT IN MOTOR SOFT STARTER 1 AT MCC	PUMP 1 "RUN" STATUS INDICATION	STATUS	-	TB-02-17/18	DO-13 TO "START-STOP" PUMP 1 FROM PLC
DI-10	YI-502	D-NO/NC	CONTACT ON PUMP 1 "H-O-A" SELECTOR SWITCH	MONITOR "H-O-A" SEL. SWITCH IN "AUTO" POSITION	STATUS	-	TB-02-19/20	
DI-11	YI-503	D-NO/NC	CONTACT IN MOTOR SOFT STARTER 2 AT MCC	PUMP 2 "RUN" STATUS INDICATION	STATUS	-	TB-02-21/22	DO-14 TO "START-STOP' PUMP 2 FROM PLC
DI-12	YI-504	D-NO/NC	CONTACT ON PUMP 1 "H-O-A" SELECTOR SWITCH	MONITOR "H-O-A" SEL. SWITCH IN "AUTO" POSITION	STATUS	-	TB-02-23/24	
DI-13	YI-505	D-NO/NC	CONTACT IN MOTOR SOFT STARTER 3 AT MCC	PUMP 3 "RUN" STATUS INDICATION	STATUS	-	TB-02-25/26	DO-15 TO "START-STOP" PUMP 3 FROM PLC
DI-14	YI-506	D-NO/NC	CONTACT ON PUMP 1 "H-O-A" SELECTOR SWITCH	MONITOR "H-O-A" SEL. SWITCH IN "AUTO" POSITION	STATUS	-	TB-02-27/28	
DI-15	YI-507	D-NO/NC	CONTACT IN MOTOR SOFT STARTER 4 AT MCC	PUMP 4 "RUN" STATUS INDICATION	STATUS	-	TB-02-29/30	DO-16 TO START-STOP" PUMP 4 FROM PLC
DI-16	YI-508	D-NO/NC	CONTACT ON PUMP 1 "H-O-A" SELECTOR SWITCH	MONITOR "H-O-A" SEL. SWITCH IN "AUTO" POSITION	STATUS	-	TB-02-31/32	
DI-17	YI-509	D-NO/NC	(E) SWITCH CONTACT	MONITOR "OPEN-CLOSED" DOOR SITE ENTRY	STATUS	-	TB-02-33/34	
DI-18	YI-510	D-NO/NC	SWITCH CONTACT	MONITOR "OPEN-CLOSED" DOOR GENERATOR ENTRY	STATUS	-	TB-02-35/36	
DI-19	LAL-501	D-NO/NC	GENERATOR SCADA POINT	GENERATOR FUEL LOW LEVEL	ALARM	-	TB-02-37/38	
DI-20	LAH-501	D-NO/NC	GENERATOR SCADA POINT	GENERATOR FUEL HIGH LEVEL	ALARM	-	TB-02-39/40	
DI-21	YI-511	D-NO/NC	GENERATOR SCADA POINT	GENERATOR SECONDARY CONTAINMENT FUEL TANK LEAK	ALARM	-	TB-02-41/42	
DI-22	YI-512	D-NO/NC	GENERATOR SCADA POINT	GENERATOR "RUN" STATUS INDICATION	ALARM	-	TB-02-43/44	DO-17 TO "START-STOP" GENERATOR FROM PLC
DI-23	YA-501	D-NO/NC	GENERATOR SCADA POINT	GENERATOR "COMMON ALARMS"	ALARM	-	TB-02-45/46	
DI-24	YA-502	D-NO/NC	GENERATOR SCADA POINT	GENERATOR "CRITICAL ALARMS"	ALARM	-	TB-02-47/48	
DI-25	YI-513	D-NO/NC	ATS SCADA POINT	ATS "NORMAL" SOURCE AVAILABLE	STATUS	-	TB-02-49/50	
DI-26	YI-514	D-NO/NC	ATS SCADA POINT	ATS "STANDBY" SOURCE AVAILABLE	STATUS	-	TB-02-51/52	
DI-27	YI-515	D-NO/NC	ATS SCADA POINT	ATS IN NORMAL (UTILITY) POWER POSITION	STATUS	-	TB-02-53/54	POWER TO FACILITY FROM NORMAL (UTILITY) SOURCE
DI-28	YI-516	D-NO/NC	ATS SCADA POINT	ATS IN STANDBY (GENERATOR) POWER POSITION	STATUS	-	TB-02-55/56	POWER TO FACILITY FROM STANDBY (GENERATOR) SOURCE
DI-29	YA-503	D-NO/NC	PUMP CONTROLSCADA POINT	PUMP CONTROL FAULT/ALARM	ALARM	-	TB-02-57/58	
DO-01	SV-101	D-NO/NC	SOLENOID VALVE	"OPEN-CLOSE" 2-INCH FLUSH VALVE, 8-INCH LINE		120-VAC	TB-03-1/2	ENERGIZE TO "OPEN".
DO-02	SV-201	D-NO/NC	SOLENOID VALVE	"OPEN-CLOSE" 2-INCH FLUSH VALVE, 12-INCH LINE	CNTRL	120-VAC	TB-03-3/4	ENERGIZE TO "OPEN".
DO-03	SV-102	D-NO/NC	SOLENOID VALVE	"OPEN-CLOSE" 8-INCH PRV ZONE 1A	CNTRL	120-VAC	TB-03-5/6	DE-ENERGIZE TO "OPEN"
DO-04	SV-103	D-NO/NC	SOLENOID VALVE	"OPEN-CLOSE" TANK 1 ALTITUDE VALVE	CNTRL	120-VAC	TB-03-7/8	DE-ENERGIZE TO "OPEN"
DO-05	SV-202	D-NO/NC	SOLENOID VALVE	"OPEN-CLOSE" 12-INCH PRV ZONE 1A	CNTRL	120-VAC	TB-03-9/10	DE-ENERGIZE TO "OPEN"
DO-06	SV-203	D-NO/NC	SOLENOID VALVE	"OPEN-CLOSE" TANK 2 ALTITUDE VALVE	CNTRL	120-VAC	TB-03-11/12	DE-ENERGIZE TO "OPEN"
DO-07	SV-401	D-NO/NC	SOLENOID VALVE	"OPEN-CLOSE" 6-INCH PRV ZONE 1A TO 1	CNTRL	120-VAC	TB-03-13/14	DE-ENERGIZE TO "OPEN"
DO-08	SV-402	D-NO/NC	SOLENOID VALVE	"OPEN-CLOSE" 12-INCH PRV ZONE 1A TO 1	CNTRL	120-VAC	TB-03-15/16	DE-ENERGIZE TO "OPEN"
DO-09	MV-301	D-NO/NC	MOTORIZED VALVE	"OPEN" TANK 1 SUPPLY VALVE TO PUMPS	CNTRL	120-VAC	TB-03-17/18	
DO-10	MV-301	D-NO/NC	MOTORIZED VALVE	"CLOSE" TANK 1 SUPPLY VALVE TO PUMPS	CNTRL	120-VAC	TB-03-17/18	
DO-11	MV-302	D-NO/NC	MOTORIZED VALVE	"OPEN" TANK 2 SUPPLY VALVE TO PUMPS	CNTRL	120-VAC	TB-03-19/20	
DO-12	MV-302	D-NO/NC	MOTORIZED VALVE	"CLOSE" TANK 2 SUPPLY VALVE TO PUMPS	CNTRL	120-VAC	TB-03-19/20	
DO-13	YC-501	D-NO/NC	"AUTO" MODE FOR PUMP 1	(E) "START-STOP" PUMP 1 FROM PLC	CNTRL	-	TB-03-21/22	
DO-14	YC-502	D-NO/NC	"AUTO" MODE FOR PUMP 2	(E) "START-STOP" PUMP 2 FROM PLC	CNTRL	-	TB-03-23/24	
DO-15	YC-503	D-NO/NC	"AUTO" MODE FOR PUMP 3	(E) "START-STOP" PUMP 3 FROM PLC	CNTRL	-	TB-03-25/26	
DO-16	YC-504	D-NO/NC	"AUTO" MODE FOR PUMP 4	(E) "START-STOP" PUMP 4 FROM PLC	CNTRL	-	TB-03-27/28	
DO-17	YC-505	D-NO/NC		"START-STOP" GENERATOR FROM PLC	CNTRL	-	TB-03-29/30	EG UNIT TO START WHEN UTILITY POWER IS LOST AND IF PLC IS CALLING FOR ANY PUMPS TO RUN

GHD Inc.
1735 North First Street Suite 301 San Jose California 95112 USA
T 1 408 451 9615 F 1 408 451 9665
W www.ghd.com

DATE	REVISION	BY

CITY OF SANTA CLARA
WATER & SEWER UTILITIES

NORTHSIDE TANKS SITE IMPROVEMENTS PROJECT
ELECTRICAL INPUT/OUTPUT SCHEDULE

APPROVED DATE
DIRECTOR OF WATER & SEWER UTILITIES

PROJ. NO.	592-1423-80300-7054-(I)30148		
DESIGNED BY	NK	DRAWN BY	CF
CHECKED BY	AC	YEAR	2014
DATE	JULY 2014	BLK. BK. PG.	94
DRAWING NO.	E603	SHT. 46	OF 49
HORIZ. NOTED	VERT. –	DWG. NO.	W-3143-4

Plot Date: 24 June 2014 - 12:19 AM Plotted by: Ming Yee Cad File No: G:\11205 City of Santa Clara\8410306 Northside Tanks Piping Reconfig\06-CAD\Sheets\8410306 E603.dwg

STATE OF CALIFORNIA
INDOOR LIGHTING
CEC-NRCC-LTI-01-E (Revised 06/13) CALIFORNIA ENERGY COMMISSION

CERTIFICATE OF COMPLIANCE – USER INSTRUCTIONS	NRCC-LTI-01-E
Indoor Lighting	(Page 1 of 5)
Project Name: City of Santa Clara Northside Tanks - Electrical	Date Prepared: 1/20/2014

Climate Zone: 4	Conditioned Floor Area : 590
	Unconditioned Floor Area : 0

General Information

Building Type:	☑ Nonresidential	☐ High-Rise Residential	☐ Hotel/Motel	☐ Schools	☐ Relocatable Public Schools
☑ Conditioned Spaces	☐ Unconditioned Spaces	**Phase of Construction:**	☐ New Construction	☑ Addition	☐ Alteration
Method of Compliance:	☑ Complete Building	☐ Area Category	☐ Tailored		

LIGHTING COMPLIANCE DOCUMENTS (select yes for each document included)

For detailed instructions on the use of this and all Energy Efficiency Standards compliance documents, refer to the Nonresidential Manual published by the California Energy Commission.

YES	NO	FORM	TITLE
YES		NRCC-LIT-01-E	Certificate of Compliance. All Pages required on plans for all submittals.
YES		NRCC-LIT-02-E	Lighting Controls, Certificate of Compliance, and PAF Calculation. All Pages required on plans for all submittals.
YES		NRCC-LIT-03-E	Indoor Lighting Power Allowance
	NO	NRCC-LIT-04-E	Tailored Method Worksheets
	NO	NRCC-LIT-05-E	Line Voltage Track Lighting Worksheets

Summary of Allowed Lighting Power

Conditioned and Unconditioned space Lighting must not be combined for compliance

	Indoor Lighting Power for Conditioned Spaces		Watts	Indoor Lighting Power for Unconditioned Spaces		Watts
1.	**Installed** Lighting NRCC-LTI-01-E, page 4	+	413	**Installed** Lighting NRCC-LTI-01-E, page 4	+	0
2.	PORTABLE ONLY FOR OFFICES NRCC-LTI-01-E, page 3	+				
3.	Minus Lighting Control Credits NRCC-LTI-01-E, page 2	-	0	Minus Lighting Control Credits NRCC-LTI-01-E, page 2	-	0
4.	Adjusted **Installed** Lighting Power (row 1 plus row 2 minus row 3)	=	413	Adjusted **Installed** Lighting Power (row 1 minus row 3)	=	0

STATE OF CALIFORNIA
INDOOR LIGHTING
CEC-NRCC-LTI-01-E (Revised 06/13) CALIFORNIA ENERGY COMMISSION

CERTIFICATE OF COMPLIANCE – USER INSTRUCTIONS	NRCC-LTI-01-E
Indoor Lighting	(Page 2 of 5)
Project Name: City of Santa Clara Northside Tanks - Electrical	Date Prepared: 1/20/2014

5.	Complies ONLY if **Installed** ≤ **Allowed**		Complies ONLY if **Installed** ≤ **Allowed**	
6.	**Allowed** Lighting Power Conditioned NRCC-LTI-03-E, page 1	590	**Allowed** Lighting Power Unconditioned NRCC-LTI-03-E, page 1	590

Declaration of Required Installation Certificates – Declare by selecting yes for all Installation Certificates that will be submitted. (Retain copies and verify forms are completed and signed.)

YES	NO	Form/Title	
		NRCI-LTI-01-E - Must be submitted for all buildings	☐ Field Inspector
		NRCI-LTI-02-E - Must be submitted for a lighting control system, or for an Energy Management Control System (EMCS), to be recognized for compliance.	☐ Field Inspector
		NRCI-LTI-03-E - Must be submitted for a line-voltage track lighting integral current limiter, or for a supplementary overcurrent protection panel used to energize only line-voltage track lighting, to be recognized for compliance.	☐ Field Inspector
		NRCI-LTI-04-E - Must be submitted for two interlocked systems serving an auditorium, a convention center, a conference room, a multipurpose room, or a theater to be recognized for compliance.	☐ Field Inspector
		NRCI-LTI-05-E - Must be submitted for a Power Adjustment Factor (PAF) to be recognized for compliance.	☐ Field Inspector
		NRCI-LTI-06-E - Must be submitted for additional wattage installed in a video conferencing studio to be recognized for compliance.	☐ Field Inspector

Declaration of Required Certificates of Acceptance – Declare by checking all of the Certificates of Acceptance that will be submitted. (Retain copies and verify forms are completed and signed.)

YES	NO	Form/Title	
		NRCA-LTI-02-E - Must be submitted for occupancy sensors and automatic time switch controls.	☐ Field Inspector
		NRCA-LTI-03-E - Must be submitted for automatic daylight controls.	☐ Field Inspector
		NRCA-LTI-04-E - Must be submitted for demand responsive lighting controls.	☐ Field Inspector

STATE OF CALIFORNIA
INDOOR LIGHTING
CEC-NRCC-LTI-01-E (Revised 06/13) CALIFORNIA ENERGY COMMISSION

CERTIFICATE OF COMPLIANCE – USER INSTRUCTIONS	NRCC-LTI-01-E
Indoor Lighting	(Page 3 of 5)
Project Name: City of Santa Clara Northside Tanks - Electrical	Date Prepared: 1/20/2014

A separate Lighting Schedule Must Be Filled Out for Conditioned and Unconditioned Spaces. Installed Lighting Power listed on this Lighting Schedule is only for:
☑ **CONDITIONED SPACE** ☐ **UNCONDITIONED SPACE**

A. INDOOR LIGHTING SCHEDULE and FIELD INSPECTION ENERGY CHECKLIST

- ☐ The actual indoor lighting power listed on this page and on the next page includes all installed permanent and planned portable lighting systems.
- ☐ When Complete Building Method is used for compliance, list each different type of luminaire on separate lines.
- ☐ When Area Category Method or Tailored Method is used for compliance, list each different type of luminaire by each different function area on separate lines
- ☐ Also include track lighting in schedule, and submit the track lighting compliance form (LTG-5C) when line-voltage track lighting is installed.

B. Installed Portable Luminaires in Offices – Exception to Section 140.6(a)

- ☐ This section shall be filled out ONLY for portable luminaires in offices (As defined in §100.1). All other planned portable luminaires shall be documented on next page of this compliance form.
- ☐ This section is used to determine if greater than 0.3 watts of portable lighting is planned for any office
- ☐ Fill out a separate line for each different office. Small offices that are typical (having the same general and portable lighting) may be grouped together. This allowance shall not be traded between offices having different lighting systems.

Office Portable Luminaire Schedule	Office Installed Portable Luminaire Watts Per Square Foot						Accountable Watts	Office Location	Field Inspector	
A	B	C	D	E	F	G	H	I	J	
Complete Luminaire Description (i.e., LED, under cabinet, furniture mounted direct/indirect)	Watts per Luminaire	Number of Luminaires	Installed portable luminaire watts in this office (B x C)	Square feet of this office	Watts per square foot (D / E)	If F ≤ 0.3, enter zero; if F > 0.3, (F-0.3)	E x G	Identify Office area in which these portable luminaires are installed	Pass	Fail
									☐	☐
									☐	☐
									☐	☐
									☐	☐
									☐	☐
Total installed portable luminaire watts that are greater than 0.3 watts per square foot per office:								Enter sum total of all pages into NRCC-LTI-01-E; Page 2		

STATE OF CALIFORNIA
INDOOR LIGHTING
CEC-NRCC-LTI-01-E (Revised 06/13) CALIFORNIA ENERGY COMMISSION

CERTIFICATE OF COMPLIANCE – USER INSTRUCTIONS	NRCC-LTI-01-E
Indoor Lighting	(Page 4 of 5)
Project Name: City of Santa Clara Northside Tanks - Electrical	Date Prepared: 1/20/2014

A separate Lighting Schedule Must Be Filled Out for Conditioned and Unconditioned Spaces. Installed Lighting Power listed on this Lighting Schedule is only for:
☑ **CONDITIONED SPACE** ☐ **UNCONDITIONED SPACE**

C. INDOOR LIGHTING SCHEDULE and FIELD INSPECTION ENERGY CHECKLIST

Luminaire Schedule		Installed Watts				Location	Field Inspector [1]	
A	B	C	D		E	F	G	H	
Name or Item Tag	Complete Luminaire Description (i.e, 3 lamp fluorescent troffer, F32T8, one dimmable electronic ballast)	Watts per Luminaire	How wattage was determined: CEC Default from Web	According to §130(c)	Number Luminaires	Total Installed Watts in this area (C x E)	Primary Function area in which these luminaires are installed	Pass	Fail
	45w LED Flat Panel	45.0	☑	☐	11	495	Electrical, Mechanical Room	☐	☐
			☐	☐				☐	☐
			☐	☐				☐	☐
			☐	☐				☐	☐
			☐	☐				☐	☐
			☐	☐				☐	☐
			☐	☐				☐	☐
			☐	☐				☐	☐
					INSTALLED WATTS PAGE TOTAL:	495	Enter sum total of all pages into NRCC-LTI-01-E; Page 2	413	

STATE OF CALIFORNIA
INDOOR LIGHTING
CEC-NRCC-LTI-01-E (Revised 06/13) CALIFORNIA ENERGY COMMISSION

CERTIFICATE OF COMPLIANCE – USER INSTRUCTIONS	NRCC-LTI-01-E
Indoor Lighting	(Page 5 of 5)
Project Name: City of Santa Clara Northside Tanks - Electrical	Date Prepared: 1/20/2014

DOCUMENTATION AUTHOR'S DECLARATION STATEMENT

1. I certify that this Certificate of Compliance documentation is accurate and complete.

Documentation Author Name: Nick Weil	Documentation Author Signature: Nicholas Weil
Company: GHD	Signature Date: 1/20/2014
Address: 2235 Mercury Way, Suite 150	CEA/ HERS Certification Identification (if applicable):
City/State/Zip: ,Santa Rosa, CA 95407	Phone: 707-523-1010

RESPONSIBLE PERSON'S DECLARATION STATEMENT

I certify the following under penalty of perjury, under the laws of the State of California:
1. The information provided on this Certificate of Compliance is true and correct.
2. I am eligible under Division 3 of the Business and Professions Code to accept responsibility for the building design or system design identified on this Certificate of Compliance (responsible designer).
3. The energy features and performance specifications, materials, components, and manufactured devices for the building design or system design identified on this Certificate of Compliance conform to the requirements of Title 24, Part 1 and Part 6 of the California Code of Regulations.
4. The building design features or system design features identified on this Certificate of Compliance are consistent with the information provided on other applicable compliance documents, worksheets, calculations, plans and specifications submitted to the enforcement agency for approval with this building permit application.
5. I will ensure that a completed signed copy of this Certificate of Compliance shall be made available with the building permit(s) issued for the building, and made available to the enforcement agency for all applicable inspections. I understand that a completed signed copy of this Certificate of Compliance is required to be included with the documentation the builder provides to the building owner at occupancy.

Responsible Designer Name: Shishir Doctor	Responsible Designer Signature:
Company : GHD	Date Signed: 1/20/2014
Address: 2235 Mercury Way, Suite 150	License: E13224
City/State/Zip: Santa Rosa, CA 95407	Phone: (707) 523-1010

GHD Inc.
1735 North First Street Suite 301 San Jose California 95112 USA
T 1 408 451 9615 F 1 408 451 9665
W www.ghd.com

DATE	REVISION	BY

CITY OF SANTA CLARA
WATER & SEWER UTILITIES
NORTHSIDE TANKS SITE IMPROVEMENTS PROJECT
ELECTRICAL ENERGY COMPLIANCE 1
APPROVED DATE
DIRECTOR OF WATER & SEWER UTILITIES

PROJ. NO.	592-1423-80300-7054-(I)30148		
DESIGNED BY	NK	DRAWN BY	CF
CHECKED BY	AC	YEAR	2014
DATE	JULY 2014	BLK. BK. PG.	94
DRAWING NO.	E701	SHT. 47	OF 49
HORIZ.	NOTED	VERT. –	DWG. NO. W-3143-4

Plot Date: 24 June 2014 - 12:19 AM Plotted by: Ming Yee Cad File No: G:\11205 City of Santa Clara\8410306 Northside Tanks Piping Reconfig\06-CAD\Sheets\8410306 E701.dwg

STATE OF CALIFORNIA
INDOOR LIGHTING – LIGHTING CONTROLS
CEC-NRCC-LTI-02-E (Revised 06/13) CALIFORNIA ENERGY COMMISSION

CERTIFICATE OF COMPLIANCE	NRCC-LTI-02-E
Indoor Lighting - Lighting Controls	(Page 1 of 3)
Project Name: City of Santa Clara Northside Tanks - Electrical	Date Prepared: 1/20/2014

The NRCC-LTI-02-E shall be used to document all mandatory and prescriptive lighting controls that are applicable to the project.

A. Mandatory Lighting Control Declaration Statements
Indicate if the measure applies:

YES	NO	Control Requirements
		Lighting shall be controlled by self-contained lighting control devices which are certified to the Energy Commission according to the Title 20 Appliance Efficiency Regulations in accordance with Section 110.9.
		Lighting shall be controlled by a lighting control a system or energy management control system in accordance with §110.9. An Installation Certificate shall be submitted in accordance with Section 130.4(b).
		One or more Track Lighting Integral Current Limiters shall be installed which have been certified to the Energy Commission in accordance with §110.9 and §130.0. An Installation Additionally, an Installation Certificate shall be submitted in accordance with Section 130.4(b).
		A Track Lighting Supplementary Overcurrent Protection Panel shall be installed in accordance with Section 110.9 and Section 130.3. Additionally, an Installation Certificate shall be installed in accordance with Section 130.4(b).
		All lighting controls and equipment shall comply with the applicable requirements in §110.9 and shall be installed in accordance with the manufacturer's instructions in accordance with Section 130.1.
		All luminaires shall be functionally controlled with manually switched ON and OFF lighting controls in accordance with Section 130.1(a).
		General lighting shall be separately controlled from all other lighting systems in an area. Floor and wall display, window display, case display, ornamental, and special effects lighting shall each be separately controlled on circuits that are 20 amps or less. When track lighting is used, general, display, ornamental, and special effects lighting shall each be separately controlled; in accordance with Section 130.0(a)4.
		The general lighting of any enclosed area 100 square feet or larger, with a connected lighting load that exceeds 0.5 watts per square foot shall meet the multi-level lighting control requirements in accordance with Section 130.1(b).
		All installed indoor lighting shall be equipped with controls that meet the applicable Shut-OFF control requirements in Section 130.1(c).
		Lighting in all Daylit Zones shall be controlled in accordance with the requirements in Section 130.1(d) and daylit zones are shown on the plans.
		Lighting power in buildings larger than 10,000 square feet shall be capable of being automatically reduced in response to a Demand Responsive Signal in accordance with Section 130.1(e).
		Before an occupancy permit is granted for a newly constructed building or area, or a new lighting system serving a building, area, or site is operated for normal use, indoor lighting controls serving the building, area, or site shall be certified as meeting the Acceptance Requirements for Code Compliance in accordance with Section 130.4.(a). The controls required to meet the Acceptance Requirements include automatic daylight controls, automatic shut-OFF controls, and demand responsive controls.

Registration Number: Registration Date/Time: HERS Provider:

STATE OF CALIFORNIA
INDOOR LIGHTING – LIGHTING CONTROLS
CEC-NRCC-LTI-02-E (Revised 06/13) CALIFORNIA ENERGY COMMISSION

CERTIFICATE OF COMPLIANCE	NRCC-LTI-02-E
Indoor Lighting - Lighting Controls	(Page 3 of 3)
Project Name: City of Santa Clara Northside Tanks - Electrical	Date Prepared: 1/20/2014

DOCUMENTATION AUTHOR'S DECLARATION STATEMENT
1. I certify that this Certificate of Compliance documentation is accurate and complete.

Documentation Author Name: Nick Weil	Documentation Author Signature: Nicholas Weil
Company: GHD	Signature Date: 1/20/2014
Address: 2235 Mercury Way, Suite 150	CEA/ HERS Certification Identification (if applicable):
City/State/Zip: Santa Rosa, CA 95407	Phone: 707-523-1010

RESPONSIBLE PERSON'S DECLARATION STATEMENT
I certify the following under penalty of perjury, under the laws of the State of California:
1. The information provided on this Certificate of Compliance is true and correct.
2. I am eligible under Division 3 of the Business and Professions Code to accept responsibility for the building design or system design identified on this Certificate of Compliance (responsible designer).
3. The energy features and performance specifications, materials, components, and manufactured devices for the building design or system design identified on this Certificate of Compliance conform to the requirements of Title 24, Part 1 and Part 6 of the California Code of Regulations.
4. The building design features or system design features identified on this Certificate of Compliance are consistent with the information provided on other applicable compliance documents, worksheets, calculations, plans and specifications submitted to the enforcement agency for approval with this building permit application.
5. I will ensure that a completed signed copy of this Certificate of Compliance shall be made available with the building permit(s) issued for the building, and made available to the enforcement agency for all applicable inspections. I understand that a completed signed copy of this Certificate of Compliance is required to be included with the documentation the builder provides to the building owner at occupancy.

Responsible Designer Name: Shishir Doctor	Responsible Designer Signature:
Company : GHD	Date Signed: 1/20/2014
Address: 2235 Mercury Way, Suite 150	License: E13224
City/State/Zip: Santa Rosa, CA 95407	Phone: (707) 523-1010

Registration Number: Registration Date/Time: HERS Provider:

STATE OF CALIFORNIA
INDOOR LIGHTING POWER ALLOWANCE
CEC-NRCC-LTI-03-E (Revised 06/13) CALIFORNIA ENERGY COMMISSION

CERTIFICATE OF COMPLIANCE	NRCC-LTI-03-E
Certificate of Compliance - Indoor Lighting Power Allowance	(Page 1 of 4)
Project Name: City of Santa Clara Northside Tanks - Electrical	Date Prepared: 1/20/2014

ALLOWED LIGHTING POWER (Chose Method)
A separate page must be filled out for Conditioned and Unconditioned Spaces. This page is only for: ☑ CONDITIONED spaces ☐ UNCONDITIONED spaces

A. SUMMARY TOTALS OF LIGHTING POWER ALLOWANCES
☐ If using Complete Building Method for compliance, use only the total in column (a) as total allowed building watts.
☐ If using Area Category Method, Tailored Method, or a combination of Area Category and Tailored Method for compliance, use only the total in column (b) as the total allowed building watts

	(a)	(b)
1. Complete Building Method Allowed Watts. Documented in section B of NRCC-LTI-03-E (below on this page)	590	
2. Area Category Method Allowed Watts. Documented in section C-1 of NRCC-LTI-03-E (below on this page)		
3. Tailored Method Allowed Watts. Documented in section A of NRCC-LTI-04-E		
TOTAL ALLOWED BUILDING WATTS. Enter number into correct cell on NRCC-LTI-01, Page 2, Row 1	590	

☐ Check here if building contains both conditioned and unconditioned areas.

B. COMPLETE BUILDING METHOD LIGHTING POWER ALLOWANCE

A	B		C		D
TYPE OF BUILDING (From §140.6 Table 140.6-B)	WATTS PER (ft²)	X	COMPLETE BLDG. AREA	=	ALLOWED WATTS
Comp Bldg Ind Work, Low Bay	1.00		590		590
Total Area:					
Total Watts. Enter Total Watts into section A, row 1 (Above on this page)					590

C -1 AREA CATEGORY METHOD TOTAL LIGHTING POWER ALLOWANCES (C-2 plus C-3) | **Watts**

Total from section C-2 .	
Total from section C-3 .	
Total Watts. Enter Total Watts into section A, row 2 (Above on this page) .	

Registration Number: Registration Date/Time: HERS Provider:

STATE OF CALIFORNIA
INDOOR LIGHTING POWER ALLOWANCE
CEC-NRCC-LTI-03-E (Revised 06/13) CALIFORNIA ENERGY COMMISSION

CERTIFICATE OF COMPLIANCE	NRCC-LTI-03-E
Certificate of Compliance - Indoor Lighting Power Allowance	(Page 4 of 4)
Project Name: City of Santa Clara Northside Tanks - Electrical	Date Prepared: 1/20/2014

DOCUMENTATION AUTHOR'S DECLARATION STATEMENT
1. I certify that this Certificate of Compliance documentation is accurate and complete.

Documentation Author Name: Nick Weil	Documentation Author Signature: Nicholas Weil
Company: GHD	Signature Date: 1/20/2014
Address: 2235 Mercury Way, Suite 150	CEA/ HERS Certification Identification (if applicable):
City/State/Zip: Santa Rosa, CA 95407	Phone: 707-523-1010

RESPONSIBLE PERSON'S DECLARATION STATEMENT
I certify the following under penalty of perjury, under the laws of the State of California:
1. The information provided on this Certificate of Compliance is true and correct.
2. I am eligible under Division 3 of the Business and Professions Code to accept responsibility for the building design or system design identified on this Certificate of Compliance (responsible designer).
3. The energy features and performance specifications, materials, components, and manufactured devices for the building design or system design identified on this Certificate of Compliance conform to the requirements of Title 24, Part 1 and Part 6 of the California Code of Regulations.
4. The building design features or system design features identified on this Certificate of Compliance are consistent with the information provided on other applicable compliance documents, worksheets, calculations, plans and specifications submitted to the enforcement agency for approval with this building permit application.
5. I will ensure that a completed signed copy of this Certificate of Compliance shall be made available with the building permit(s) issued for the building, and made available to the enforcement agency for all applicable inspections. I understand that a completed signed copy of this Certificate of Compliance is required to be included with the documentation the builder provides to the building owner at occupancy.

Responsible Designer Name: Shishir Doctor	Responsible Designer Signature:
Company : GHD	Date Signed: 1/20/2014
Address: 2235 Mercury Way, Suite 150	License: E13224
City/State/Zip: Santa Rosa, CA 95407	Phone: (707) 523-1010

Registration Number: Registration Date/Time: HERS Provider:

STATE OF CALIFORNIA
OUTDOOR LIGHTING
CEC-NRCC-LTO-01-E (Revised 06/13) CALIFORNIA ENERGY COMMISSION

CERTIFICATE OF COMPLIANCE	NRCC-LTO-01-E
Outdoor Lighting	(Page 1 of 3)
Project Name: City of Santa Clara Northside Tanks - Electrical	Date Prepared: 1/20/2014

Project Address:	Total Illuminated Hardscape Area: 517

General Information
Phase of Construction: ☐ New Construction ☐ Addition ☐ Alteration

Outdoor Lighting Zone (OLZ) ☐ OLZ-1 ☐ OLZ-2 ☐ OLZ-3 ☐ OLZ-4
The OLZ is: ☐ Default in accordance with §10-114, or ☐ Amended by the AHJ

DOCUMENTATION AUTHOR'S DECLARATION STATEMENT
1. I certify that this Certificate of Compliance documentation is accurate and complete.

Documentation Author Name: Nick Weil	Documentation Author Signature: Nicholas Weil
Company: GHD	Signature Date: 1/20/2014
Address: 2235 Mercury Way, Suite 150	CEA/ HERS Certification Identification (if applicable):
City/State/Zip: Santa Rosa, CA 95407	Phone: 707-523-1010

RESPONSIBLE PERSON'S DECLARATION STATEMENT
I certify the following under penalty of perjury, under the laws of the State of California:
1. The information provided on this Certificate of Compliance is true and correct.
2. I am eligible under Division 3 of the Business and Professions Code to accept responsibility for the building design or system design identified on this Certificate of Compliance (responsible designer).
3. The energy features and performance specifications, materials, components, and manufactured devices for the building design or system design identified on this Certificate of Compliance conform to the requirements of Title 24, Part 1 and Part 6 of the California Code of Regulations.
4. The building design features or system design features identified on this Certificate of Compliance are consistent with the information provided on other applicable compliance documents, worksheets, calculations, plans and specifications submitted to the enforcement agency for approval with this building permit application.
5. I will ensure that a completed signed copy of this Certificate of Compliance shall be made available with the building permit(s) issued for the building, and made available to the enforcement agency for all applicable inspections. I understand that a completed signed copy of this Certificate of Compliance is required to be included with the documentation the builder provides to the building owner at occupancy.

Responsible Designer Name: Shishir Doctor	Responsible Designer Signature:
Company : GHD	Date Signed: 1/20/2014
Address: 2235 Mercury Way, Suite 150	License: E13224
City/State/Zip: Santa Rosa, CA 95407	Phone: (707) 523-1010

LIGHTING COMPLIANCE DOCUMENTS (check box for each document included)
For detailed instructions on the use of this and all Energy Efficiency Standards compliance documents, refer to the Nonresidential Manual published by the California Energy Commission.

☑	NRCC-LTO-01-E	Certificate of Compliance
☑	NRCC-LTO-02-E	Outdoor Lighting Controls Certificate of Compliance
☑	NRCC-LTO-03-E	Outdoor Lighting Power Allowance Certificate of Compliance

STATE OF CALIFORNIA
OUTDOOR LIGHTING
CEC-NRCC-LTO-01-E (Revised 06/13) CALIFORNIA ENERGY COMMISSION

CERTIFICATE OF COMPLIANCE	NRCC-LTO-01-E
Outdoor Lighting	(Page 2 of 3)
Project Name: City of Santa Clara Northside Tanks - Electrical	Date Prepared: 1/20/2014

Summary of Allowed Outdoor Lighting Power			Watts
1.	Lighting Power Allowed for General Hardscape - NRCC-LTO-03-E	+	931
2.	Lighting Power Allowed for Specific Application per Application - NRCC-LTO-03-E	+	0
3.	Lighting Power Allowed for Specific Application per Unit Length - NRCC-LTO-03-E	+	0
4.	Lighting Power Allowed for Specific Application for Ornamental - NRCC-LTO-03-E	+	0
5.	Lighting Power Allowed for Specific Application per Square Foot - NRCC-LTO-03-E	+	0
6.	**Sum Total of ALLOWED** Outdoor Lighting Power	=	931
	Complies ONLY if **Installed** ≤ **Allowed**		
7.	**INSTALLED** Outdoor lighting from NRCC-LTI-01-E, page 3		88

Declaration of Required Installation Certificates – Declare by checking all Installation Certificates that will be submitted. (Retain copies and verify forms are completed and signed.)

☑ NRCI-LTO-01-E - Must be submitted for all buildings	☐ Field Inspector
☑ NRCI-LTO-02-E - Must be submitted for a lighting control system, or for an Energy Management Control System (EMCS), to be recognized for compliance.	☐ Field Inspector

Declaration of Required Certificates of Acceptance – Declare by checking all of the Certificates of Acceptance that will be submitted. (Retain copies and verify forms are completed and signed.)

☑ NRCA-LTO-02-E - Must be submitted for outdoor lighting controls.	☐ Field Inspector

Schedule of luminaires exempt from the outdoor lighting power requirements in §140.7

Name or Symbol	Description of exempt luminaire in accordance with the exemptions

Schedule of luminaires exempt from the cutoff requirements in §130.2(b)

Name or Symbol	Description of exempt luminaire in accordance with the exemptions

Schedule of luminaires exempt from the outdoor lighting control requirements in §130.2(c)

Name or Symbol	Description of exempt luminaire in accordance with the exemptions

GHD Inc.
1735 North First Street Suite 301 San Jose California 95112 USA
T 1 408 451 9615 F 1 408 451 9665
W www.ghd.com

DATE	REVISION	BY

CITY OF SANTA CLARA
WATER & SEWER UTILITIES
NORTHSIDE TANKS SITE IMPROVEMENTS PROJECT
ELECTRICAL ENERGY COMPLIANCE 2
APPROVED DATE
DIRECTOR OF WATER & SEWER UTILITIES

PROJ. NO. 592-1423-80300-7054-(I)30148			
DESIGNED BY NK	DRAWN BY CF		
CHECKED BY AC	YEAR 2014		
DATE JULY 2014	BLK. BK. PG. 94		
DRAWING NO. E702	SHT. 48 OF 49		
HORIZ. NOTED	VERT. –	DWG. NO. W-3143-4	

Plot Date: 24 June 2014 - 12:19 AM Plotted by: Ming Yee Cad File No: G:\11205 City of Santa Clara\8410306 Northside Tanks Piping Reconfig\06-CAD\Sheets\8410306 E702.dwg

CERTIFICATE OF COMPLIANCE	NRCC-LTO-01-E
Outdoor Lighting	(Page 3 of 3)
Project Name: City of Santa Clara Northside Tanks - Electrical	Date Prepared: 1/20/2014

A. OUTDOOR LIGHTING SCHEDULE and FIELD INSPECTION ENERGY CHECKLIST

Luminaire Schedule		Installed Watts					Location	Cutoff	Field Inspector	
A	B	C	D		E	F	G	H	I	
			How wattage was determined							
Name or Item Tag	Complete Luminaire Description	Watts per Luminaire	CEC Default from NA8	According to §130.0(c)	Number Luminaires	Total Installed Watts in this area (C x E)	Primary Function area in which these luminaires are installed	BUG Rating	Pass	Fail
	22w LED Wall Pack	22.0	☑	☐	4	88	Automotive Hardscape		☐	☐
			☐	☐					☐	☐
			☐	☐					☐	☐
			☐	☐					☐	☐
			☐	☐					☐	☐
			☐	☐					☐	☐
			☐	☐					☐	☐
			☐	☐					☐	☐
			☐	☐					☐	☐
			☐	☐					☐	☐
			☐	☐					☐	☐
			☐	☐					☐	☐
			☐	☐					☐	☐
			☐	☐					☐	☐
			☐	☐					☐	☐
			☐	☐					☐	☐
			☐	☐					☐	☐
			☐	☐					☐	☐
			☐	☐					☐	☐
		INSTALLED WATTS PAGE TOTAL:				88	Enter sum total of all pages into NRCC-LTO-01-E; Page 2		88	

STATE OF CALIFORNIA

OUTDOOR LIGHTING CONTROLS

CEC-NRCC-LTO-02-E (Revised 06/13) CALIFORNIA ENERGY COMMISSION

CERTIFICATE OF COMPLIANCE	NRCC-LTO-02-E
Outdoor Lighting Controls	(Page 1 of 3)
Project Name: City of Santa Clara Northside Tanks - Electrical	Date Prepared: 1/20/2014

The NRCC-LTO-02-E shall be used to document all mandatory outdoor lighting controls that are applicable to the project.

Mandatory Outdoor Lighting Control Declaration Statements

Check all that apply:

- ☐ Lighting shall be controlled by self-contained lighting control devices which are certified to the Energy Commission according to the Title 20 Appliance Efficiency Regulations in accordance with §110.9.
- ☐ Lighting shall be controlled by a lighting control a system or energy management control system in accordance with §110.9. An Installation Certificate shall be submitted in accordance with §130.4(b).
- ☐ All lighting controls and equipment shall comply with the applicable requirements in §110.9 and shall be installed in accordance with the manufacturer's instructions in accordance with §130.1
- ☐ Part-Night Outdoor Lighting Controls, as defined in Section 100.1, shall meet the requirements in Section 110.9(b)5
- ☐ All outdoor incandescent luminaires rated over 100 watts, determined in accordance with Section 130.0(c), shall be controlled by a motion sensor.
- ☐ All outdoor luminaires rated for use with lamps greater than 150 lamp watts, determined in accordance with Section 130.0(c), shall comply with Backlight, Uplight, and Glare (collectively referred to as "BUG") in accordance with Section 130.2(b)
- ☐ All installed outdoor lighting shall be controlled by a photocontrol or outdoor astronomical time-switch control in accordance with Section 130.2(c)1
- ☐ All installed outdoor lighting shall be circuited and independently controlled from other electrical loads by an automatic scheduling control in accordance with Section 130.2(c)2
- ☐ All installed outdoor lighting, where the bottom of the luminaire is mounted 24 feet or less above the ground, shall be controlled with automatic lighting controls in accordance with Section 130.2(c)3
- ☐ For Outdoor Sales Frontage, Outdoor Sales Lots, and Outdoor Sales Canopies lighting, an automatic lighting control in accordance with Section 130.2(c)4
- ☐ For Building Facade, Ornamental Hardscape and Outdoor Dining lighting, an automatic lighting control in accordance with Section 130.2(c)5
- ☐ Before an occupancy permit is granted for a newly constructed building or area, or a new lighting system serving a building, area, or site is operated for normal use, indoor lighting controls serving the building, area, or site shall be certified as meeting the Acceptance Requirements for Code Compliance in accordance with §130.4.(a). Outdoor lighting controls shall comply with the applicable requirements of Section 130.2(c) and Reference Nonresidential Appendix NA7.8

STATE OF CALIFORNIA

OUTDOOR LIGHTING CONTROLS

CEC-NRCC-LTO-02-E (Revised 06/13) CALIFORNIA ENERGY COMMISSION

CERTIFICATE OF COMPLIANCE	NRCC-LTO-02-E
Outdoor Lighting Controls	(Page 2 of 3)
Project Name: City of Santa Clara Northside Tanks - Electrical	Date Prepared: 1/20/2014

MANDATORY OUTDOOR LIGHTING CONTROL SCHEDULE and FIELD INSPECTION CHECKLIST

Outdoor Lighting Control Schedule			Standards Complying With [1] (✓ all that apply, or enter 'E' if Exempted)						✓ if Acceptance Test Required	Field Inspector	
A	B	C	D	E	F	G	H	I	N	O	
Location and Application of Luminaires being controlled	Type/ Description of Lighting Control (i.e. motion sensor, photocontrol, outdoor astronomical time-switch control, centralized time-based zone lighting control)	# of Units	§130.2(a)	§130.2(c)1	§130.2(c)2	§130.2(c)3	§130.2(c)4	§130.2(c)5		Pass	Fail
										☐	☐
										☐	☐
										☐	☐
										☐	☐
										☐	☐
										☐	☐
										☐	☐
										☐	☐
										☐	☐
										☐	☐
										☐	☐
										☐	☐
										☐	☐
										☐	☐
										☐	☐
										☐	☐
										☐	☐

STATE OF CALIFORNIA

OUTDOOR LIGHTING CONTROLS

CEC-NRCC-LTO-02-E (Revised 06/13) CALIFORNIA ENERGY COMMISSION

CERTIFICATE OF COMPLIANCE	NRCC-LTO-02-E
Outdoor Lighting Controls	(Page 3 of 3)
Project Name: City of Santa Clara Northside Tanks - Electrical	Date Prepared: 1/20/2014

DOCUMENTATION AUTHOR'S DECLARATION STATEMENT

1. I certify that this Certificate of Compliance documentation is accurate and complete.

Documentation Author Name: Nick Weil	Documentation Author Signature: Nicholas Weil
Company: GHD	Signature Date: 1/20/2014
Address: 2235 Mercury Way, Suite 150	CEA/ HERS Certification Identification (if applicable):
City/State/Zip: Santa Rosa, CA 95407	Phone: 707-523-1010

RESPONSIBLE PERSON'S DECLARATION STATEMENT

I certify the following under penalty of perjury, under the laws of the State of California:

1. The information provided on this Certificate of Compliance is true and correct.
2. I am eligible under Division 3 of the Business and Professions Code to accept responsibility for the building design or system design identified on this Certificate of Compliance (responsible designer).
3. The energy features and performance specifications, materials, components, and manufactured devices for the building design or system design identified on this Certificate of Compliance conform to the requirements of Title 24, Part 1 and Part 6 of the California Code of Regulations.
4. The building design features or system design features identified on this Certificate of Compliance are consistent with the information provided on other applicable compliance documents, worksheets, calculations, plans and specifications submitted to the enforcement agency for approval with this building permit application.
5. I will ensure that a completed signed copy of this Certificate of Compliance shall be made available with the building permit(s) issued for the building, and made available to the enforcement agency for all applicable inspections. I understand that a completed signed copy of this Certificate of Compliance is required to be included with the documentation the builder provides to the building owner at occupancy.

Responsible Designer Name: Shishir Doctor	Responsible Designer Signature: [signature]
Company : GHD	Date Signed: 1/20/2014
Address: 2235 Mercury Way, Suite 150	License: E13224
City/State/Zip: Santa Rosa, CA 95407	Phone: (707) 523-1010

STATE OF CALIFORNIA

OUTDOOR LIGHTING POWER ALLOWANCES

CEC-NRCC-LTO-03-E (Revised 06/13) CALIFORNIA ENERGY COMMISSION

CERTIFICATE OF COMPLIANCE	NRCC-LTO-03-E
Outdoor Lighting Power Allowances	(Page 1 of 6)
Project Name: City of Santa Clara Northside Tanks - Electrical	Date Prepared: 1/20/2014

A. OUTDOOR LIGHTING POWER ALLOWANCE SUMMARY

1. General Hardscape Lighting Power Allowance (Site Total from Section B of NRCC-LTO-03-E)									1. 931
2. Additional Specific "use it or lose it" Lighting Power Allowances listed in each of these cells shall be identical to total allowed watts determined in Section C-1 to C-4 of NRCC-LTI-04-E.									
PER APPLICATION from Section C-1		SALES FRONTAGE from Section C-2		ORNAMENTAL LIGHTING from Section C-3		PER SPECIFIC AREA from Section C-4.			
0	+	0	+	0	+	0	=		2. 0
3. Total Allowed Outdoor Lighting Wattage (add rows 1 and 2)									3. 931

B. GENERAL HARDSCAPE LIGHTING POWER ALLOWANCE FROM TABLE 140.7-A

Area Wattage Allowance (AWA)			Linear Wattage Allowance (LWA)			Initial Wattage Allowance (IWA)	Total General Hardscape Lighting Allowance
A	B	C	D	E	F	G	H
Illuminated Hardscape Area	AWA Per Square Foot	AWA (A x B)	Perimeter Length of General Hardscape	LPA per Linear Foot	LWA (D x E)	IWA (Watts)	C + F + G
180	0.090	16	66	0.600	40	770	826
160	0.090	14	60	0.600	36	0	50
177	0.090	16	64	0.600	38	0	54
						TOTAL	931

STATE OF CALIFORNIA

OUTDOOR LIGHTING POWER ALLOWANCES

CEC-NRCC-LTO-03-E (Revised 06/13) CALIFORNIA ENERGY COMMISSION

CERTIFICATE OF COMPLIANCE	NRCC-LTO-03-E
Outdoor Lighting Power Allowances	(Page 4 of 6)
Project Name: City of Santa Clara Northside Tanks - Electrical	Date Prepared: 1/20/2014

DOCUMENTATION AUTHOR'S DECLARATION STATEMENT

1. I certify that this Certificate of Compliance documentation is accurate and complete.

Documentation Author Name: Nick Weil	Documentation Author Signature: Nicholas Weil
Company: GHD	Signature Date: 1/20/2014
Address: 2235 Mercury Way, Suite 150	CEA/ HERS Certification Identification (if applicable):
City/State/Zip: Santa Rosa, CA 95407	Phone: 707-523-1010

RESPONSIBLE PERSON'S DECLARATION STATEMENT

I certify the following under penalty of perjury, under the laws of the State of California:

1. The information provided on this Certificate of Compliance is true and correct.
2. I am eligible under Division 3 of the Business and Professions Code to accept responsibility for the building design or system design identified on this Certificate of Compliance (responsible designer).
3. The energy features and performance specifications, materials, components, and manufactured devices for the building design or system design identified on this Certificate of Compliance conform to the requirements of Title 24, Part 1 and Part 6 of the California Code of Regulations.
4. The building design features or system design features identified on this Certificate of Compliance are consistent with the information provided on other applicable compliance documents, worksheets, calculations, plans and specifications submitted to the enforcement agency for approval with this building permit application.
5. I will ensure that a completed signed copy of this Certificate of Compliance shall be made available with the building permit(s) issued for the building, and made available to the enforcement agency for all applicable inspections. I understand that a completed signed copy of this Certificate of Compliance is required to be included with the documentation the builder provides to the building owner at occupancy.

Responsible Designer Name: Shishir Doctor	Responsible Designer Signature: [signature]
Company : GHD	Date Signed: 1/20/2014
Address: 2235 Mercury Way, Suite 150	License: E13224
City/State/Zip: Santa Rosa, CA 95407	Phone: (707) 523-1010

GHD Inc.
1735 North First Street Suite 301 San Jose California 95112 USA
T 1 408 451 9615 F 1 408 451 9665
W www.ghd.com

DATE	REVISION	BY

CITY OF SANTA CLARA
WATER & SEWER UTILITIES

NORTHSIDE TANKS SITE IMPROVEMENTS PROJECT
ELECTRICAL ENERGY COMPLIANCE 3

APPROVED DATE
DIRECTOR OF WATER & SEWER UTILITIES

PROJ. NO. 592-1423-80300-7054-(I)30148			
DESIGNED BY	NK	DRAWN BY	CF
CHECKED BY	AC	YEAR	2014
DATE	JULY 2014	BLK. BK. PG.	94
DRAWING NO.	E703	SHT. 49	OF 49
HORIZ. NOTED	VERT. -	DWG. NO.	W-3143-4

Plot Date: 24 June 2014 - 12:19 AM Plotted by: Ming Yee Cad File No: G:\11205 City of Santa Clara\8410306 Northside Tanks Piping Reconfig\06-CAD\Sheets\8410306 E703.dwg

Meeting Date: 7/1/14

AGENDA REPORT

City of Santa Clara, California

Agenda Item # 6A-5

Date: June 24, 2014

To: City Manager for Council Action

From: Senior Staff Aide

Subject: Request for Approval and Authorization to Publish *Mission City SCENES*/August 2014

EXECUTIVE SUMMARY:
The August 2014 issue of Mission City SCENES is scheduled to include the following:

- Art & Wine Festival
- Neighborhood Watch
- Household Hazardous Waste Drop-Off Day
- Surveillance Cameras with SCPD
- Movie Night at Harris-Lass Museum
- New Food Ware Ordinance
- Triton First Fridays Performance Series

ADVANTAGES AND DISADVANTAGES OF ISSUE:
The *Mission City SCENES* provides timely and important information to citizens, including details about City events and programs, and updates of City activities. There are no recognized disadvantages.

ECONOMIC/FISCAL IMPACT:
Cost of printing the *Mission City SCENES* for one year is $18,000 or roughly 3.6 cents for each insert printed. There is no additional postage cost for including the SCENES with utility bills. With the current one-page utility bills, there is usually sufficient postage to handle a second, additional insert without incurring increased postage costs.

RECOMMENDATION:
That the Council give approval and authorization to publish the August, 2014 *Mission City SCENES*.

Jashma Kadam
Senior Staff Aide

APPROVED:

Julio J. Fuentes
City Manager

Documents Related to this Report:
1) August 2014 Mission City SCENES
I:\Citymanagers\CMO Publications\Mission City SCENES\2014\August 2014

Cover

Santa Clara Art & Wine Festival
Saturday and Sunday, September 13 & 14

The 2014 Santa Clara Art & Wine Festival will feature the talents of local and regional artists with nearly 175 booths to visit, 25 community groups serving international foods, four vintners pouring fine wines, micro-brewed beer, live entertainment on three stages, and the ever-popular Kids Kingdom.

The Santa Clara Art & Wine Festival is set inside picturesque Central Park. The park sprawls over 52-acres and comprises a beautiful lake, hundreds of trees, several picnic areas and acres of green grass. More than 50,000 people from Santa Clara and the surrounding communities will attend the two-day event.

The Santa Clara Art & Wine Festival is a tradition which brings the community together for one common purpose: to support vital community groups and organizations in Santa Clara. To date, the Festival has generated hundreds of thousands of dollars for local charities.

The Santa Clara Art & Wine Festival is free of charge to the community. Please leave your pets at home. The Santa Clara City Council has passed a special weekend ordinance that does not allow pets at the Festival.

We hope you enjoy your time at our Festival in 2014.

INSIDE:

- Neighborhood Watch
- Household Hazardous Waste Drop-Off Day
- Surveillance Cameras with SCPD
- Movie Night at Harris-Lass Museum
- New Food Ware Ordinance
- Triton First Fridays Performance Series

Neighborhood Watch
Neighborhood Watch is a crime prevention program that enlists the participation of residents, in cooperation with law enforcement, to reduce crime in their neighborhoods. Neighborhood Watch groups take a proactive approach to fighting crime by becoming the extra set of eyes and ears for law enforcement.

- Watch groups do not require a lot of time. It requires awareness and knowledge regarding the neighborhood you live in and the neighbors you live around.
- Members learn how to make their homes more secure, watch out for each other and the neighborhood, and report activities that raise their suspicions to the police.
- You can form a Watch group around any geographical unit: a block, apartment, park, business area, public housing complex, or office.
- Watch groups are not vigilantes. They are extra eyes and ears reporting crime and helping neighbors. Neighborhood Watch helps build pride and serves as a springboard for efforts that address community concerns.

If you would like to schedule a presentation in your neighborhood, contact the Santa Clara Police Department Crime Prevention Unit (408) 615-4876 or *rthomas@santaclaraca.gov.*

Household Hazardous Waste Drop-Off Day
September 27
Safe and easy disposal of household hazardous waste is available at a drop-off event on Saturday, September 27, 2014 at the City of Santa Clara Street Corporation Yard, 1700 Walsh Avenue. Residents must register to attend this event by calling the County Household Hazardous Waste Program (CoHHWP) at (408) 299-7300 or registering on-line at *hhw.org.* Fluorescent lights (bulbs and tubes), Sharps containers, batteries, paints, automotive fluids, propane, household and garden chemicals, electronic waste and other types of household hazardous wastes can be safely disposed of at any County-wide drop-off event. Items NOT accepted include large household appliances, ammunition, explosives, reactives, or containers larger than five gallons. Contact the Police Department at (408) 615-4700 regarding disposal of prescription medication, ammunition or explosives.

Surveillance Cameras with SCPD
The Santa Clara Police Department (SCPD) is reaching out to residents and businesses with surveillance camera(s) on their property. SCPD would like to create a database to catalog the surveillance cameras in our community. As crimes occur, SCPD can reach out to residents and/or businesses in the area to see if their system has captured this vital information that may help solve the crime.

Video surveillance is one of the best methods for apprehending criminals and convicting suspects who are caught committing a crime. If you are interested in participating in this community-police partnership, please register here at *scpd.org/index.aspx?recordid=121&page=2768.*

There is no fee to participate in this program. All information will be kept confidential and will only be viewed by SCPD personnel. Participation is completely voluntary.

If you are considering purchasing a video surveillance system, please consider the following:

- The higher the resolution of the video the better results that will be yielded;
- A minimum of 30-days storage of information is recommended;
- Camera(s) should face entrance and exit points; and,
- Camera(s) should be located on private property only.

For more information, contact Community Services Officer Rachel Thomas at (408) 615-4876 or *rthomas@santaclaraca.gov.*

Movie Night at Harris-Lass Museum
September 12
On Friday night, September 12, 2014, in the 1867 era Barn on the Harris Lass Museum Preserve, 1889 Market Street (off Winchester), the Historic Preservation Society of Santa Clara is sponsoring a 'Movie Night.' A short documentary film pertaining to Santa Clara Valley history will be shown.

Film showings will be held at 6:30, 7:30 and 8:30 p.m., and popcorn and cider will be served. Admission is free. Call the Harris-Lass Message Line at (408) 249-7905 or view the Museum's website at *harrislass.org/* for more information. RSVP to Leo at (408) 985-5384 with the time you would like to attend.

New Food Ware Ordinance
On May 20, 2014, City Council adopted a Polystyrene Foam Disposable Service Ware Ordinance. The Ordinance prohibits national (multi-state) food vendors from selling or providing prepared food in polystyrene foam disposable service ware on or after September 1, 2014, and will be extended to all other food vendors on January 1, 2015. A list of alternative products and pricing is available at *santaclaraca.gov/foam.* Food vendors may request on-site technical assistance via email at *environment@santaclaraca.gov* or by calling (408) 615-3080.

Triton First Fridays Performance Series
September 5
Triton First Fridays performance series, a new city-sponsored event, will feature Bay Area, community-based performers, and when, possible, performances that uniquely connect with local cultural resources and history. Programs will be 45-75 minutes and feature primarily classical and acoustic performances designed to bring together multiple audiences. Sister Cities will provide refreshments. Performances will run through June 2015.

Meeting Date: 7/1/14

AGENDA REPORT

City of Santa Clara, California

Agenda Item # 6A-6

Santa Clara All-America City 2001

Date: June 27, 2014

To: City Manager for Council Action

From: Economic Development Officer/Assistant City Manager

Subject: Adopt Resolution Authorizing City Manager to Approve Exceptions to the Council Approved Banners on Public Property Policy for Levi's Stadium; Authorizing the City Manager to Enter into an Agreement allowing StadCo and Stadium Management Company to Install Hardware and Banners; and Directing the City Manager to Revise the Policy to Accommodate Events at Levi's Stadium for City Council Approval

EXECUTIVE SUMMARY:

On April 21, 1998 the Council adopted Policy and Procedures 004 (Policy) on the display of banners or free-standing signs on public property. The Policy was subsequently updated and amended in January 2011 (attached).

StadCo and the Stadium Management Company (ManagementCo) have requested authorization to hang banners on light poles along Great America Parkway and Tasman Drive to announce and celebrate the opening of Levi's Stadium in July. The existing policy does not allow for the scale of the quantity of banners currently being contemplated by Levi's Stadium. Approval of the recommended action would allow the City Manager to approve exceptions to the Policy in sizing, number and placement of banners for opening activities at Levi's Stadium.

In addition, the Policy currently provides that the City would be responsible for installing the hardware necessary on each light pole to accommodate the banners, estimated to be in the range of $300 per fixture. StadCo and ManagementCo are willing to provide the upfront funds (with the possibility of future reimbursement) and install the requisite hardware in order allow for the placement of banners on Great America Parkway and Tasman Drive. Approval of the recommended action would allow the City Manager to enter into an Agreement allowing StadCo and Stadium Management Company to install hardware and banners on street light poles on Great American parkway and Tasman Drive.

Because of the high profile nature of the major events planned at Levi's Stadium, staff believes that a revision of the Banner Policy is necessary for the Stadium area. Approval of the recommended action would direct the City Manager to revise the Policy to accommodate future events at Levi's Stadium for future City Council approval.

ADVANTAGES AND DISADVANTAGES OF ISSUE:

Approval of the recommended action would allow for the potential development and installation of banners along the two major streets leading to Levi's Stadium to celebrates its opening and inaugural season. There

will be heavy media coverage during the coming months and allowing for banners on light poles will elevate the profile of the area.

ECONOMIC/FISCAL IMPACT:

Not all of the light poles on Great America Parkway and Tasman Drive currently have the hardware necessary to install banners. StadCo/Stadium Management Company are willing to front the cost of the installation of hardware. The total cost will be dependent upon the number of light poles identified for the banners. There will be no initial cost to the City.

RECOMMENDATION:

That the City Council adopt a resolution:

1. Authorizing the City Manager to approve exceptions to the Council Policy 004 – Banners on Public Property for opening activities at Levi's Stadium;
2. Authorizing the City Manager to enter into an Agreement allowing StadCo and Stadium Management Company to install hardware and banners on street light poles on Great America Parkway and Tasman Drive; and
3. Directing the City Manager to revise the Policy to accommodate future events at Levi's Stadium for future City Council approval.

Ruth Shikada
Economic Development Officer/
Assistant City Manager

APPROVED:

Julio J. Fuentes
City Manager

Documents Related to this Report:

1) City Council Policy 004 – Banners on Public Property

2) Resolution

BANNERS ON PUBLIC PROPERTY

POLICY

The temporary display of banners or free-standing signs on public property is limited to banners/signs which advertise local public events. Display of banners or free-standing signs must be approved, scheduled and coordinated by the Parks and Recreation Department, with the exception of the display of banners on light poles along Great America Parkway, for which application must be made to the City Manager's Office. Banner applications will be approved on a first-come, first-serve basis.

Banners/signs on public property are presently only allowed at Civic Center Park and Central Park Library on special stands; on the fence at Larry J. Marsalli Park at the corner of Lafayette Street and El Camino Real; and on twenty light poles along Great America Parkway (between Mission College Blvd. and Tasman Dr.).

PROCEDURE

Banners Along Great America Parkway (20 Banners Maximum)

1. The following guidelines apply:

   - Banner displays are allowed only for promoting non-political, non-religious public events, or for promoting non-profit organizations located in Santa Clara. If the banners are for an event, the event must be sponsored by a non-profit organization or by an organization booked in the Santa Clara Convention Center for an event scheduled in the Center.
   - Banners must be vertical and measure not more than 7 feet high by 2.5 feet wide. Tops and bottoms must be hemmed with pockets deep enough to accommodate the bracket hardware and with openings at the ends. Banners must be made of durable cloth, canvas or vinyl.
   - The banner artwork must be approved by the City Manager's Office.
   - Banners promoting specific events cannot be hung more than 14 days prior to the start of the event and must be removed within three days after the completion of the event. Banners promoting non-profit organizations are allowed for a period not to exceed six months.
   - The event sponsor or non-profit organization must arrange for a contractor to install and remove the banners, at no expense to the City. The City will provide the hardware necessary to mount the

BANNERS ON PUBLIC PROPERTY (cont.)

banners to the light poles.

2. An event or organization representative must complete a banner application, available from the City Manager's Office, and return it at least two weeks prior to the date of the requested installation. A copy of the proposed banner artwork, along with proof of applicant's non-profit status or Santa Clara Convention Center booking must be included with the application.

3. Upon approval of the banner application, the contractor who will hang the banners may proceed with the installation. If City banners are currently hanging on Great America Parkway, the applicant is responsible for removing and re-hanging the City banners.

Banners/Signs at the Other Approved Locations

1. The following guidelines apply:

   - Banner display is limited to banners or signs advertising local public events of a non-commercial, non-political, and non-religious nature. The event must be free of charge or aimed at raising funds for the Santa Clara non-profit sponsor.
   - Banners to be displayed at Civic Center Park or Central Park Library must be 10 feet 9 inches by 4 feet. Banners to be hung on the fence may not exceed 90 square feet.
   - Banners must be purchased and hung by the event sponsor (Exceptions: the City will hang banners at Civic Center Park and Central Park).
   - Banners cannot be hung more than 14 days prior to the start of the event and must be removed within 5 days after the completion of the event.
   - If the banner is to be attached to the fence, the applicant should affix the banner in a way that will not damage the fence. All material used to fasten the banner must be completely removed when the banner is removed.

BANNERS ON PUBLIC PROPERTY (cont.)

2. A representative of the Santa Clara non-profit sponsor must apply at the Community Recreation Center for the banner/sign display. Application must be made at least three weeks in advance of the display date. The applicant should provide:
   - Information about the event, including the requested dates for the banner/sign display;
   - Proof of non-profit status, for example, federal tax-exempt evidence.

Reference: *Council-approved policy dated 4/21/98, as amended January 2011*

RESOLUTION NO. _____

A RESOLUTION OF THE CITY OF SANTA CLARA, CALIFORNIA DELEGATING AUTHORITY TO THE CITY MANAGER TO APPROVE EXCEPTIONS TO POLICY & PROCEDURE 004 RELATED TO OPENING ACTIVITIES AT LEVI'S® STADIUM

BE IT RESOLVED BY THE CITY OF SANTA CLARA AS FOLLOWS:

WHEREAS, the City Council previously adopted Policy and Procedure 004 ("Banners on Public Property," attached) on the display of banners or free-standing signs on public property;

WHEREAS, Forty Niners SC Stadium Company LLC (StadCo) and the Stadium Management Company (ManagementCo) have requested authorization to hang banners on light poles along Great America Parkway and Tasman Drive to announce and celebrate the opening of Levi's® Stadium in July;

WHEREAS, the existing policy does not allow for the scale of the quantity of banners currently being contemplated by Levi's® Stadium; and,

WHEREAS, staff believes that a revision of Policy & Procedure 004 is necessary for the Stadium area.

NOW THEREFORE, BE IT FURTHER RESOLVED BY THE CITY OF SANTA CLARA AS FOLLOWS:

1. That the City Manager is authorized to approve exceptions to the Policy & Procedure 004 for opening activities at Levi's® Stadium.

2 That the City Manager is authorized to enter into an agreement allowing StadCo and MangementCo to install hardware and banners on street light poles on Great America Parkway and Tasman Drive.

3. That the City Manager is directed to revise Policy & Procedure 004 to accommodate future events at Levi's® Stadium for future City Council consideration.

4. That the City Manager is authorized to execute an agreement with StadCo and ManagementCo to install hardware and banners on street light poles on Great America Parkway and Tasman Drive for Levi's® Stadium opening and inaugural season.

5. Constitutionality, severability. If any section, subsection, sentence, clause, phrase, or word of this resolution is for any reason held by a court of competent jurisdiction to be unconstitutional or invalid for any reason, such decision shall not affect the validity of the remaining portions of the resolution. The City of Santa Clara, California, hereby declares that it would have passed this resolution and each section, subsection, sentence, clause, phrase, and word thereof, irrespective of the fact that any one or more section(s), subsection(s), sentence(s), clause(s), phrase(s), or word(s) be declared invalid.

6. Effective date. This resolution shall become effective immediately.

I HEREBY CERTIFY THE FOREGOING TO BE A TRUE COPY OF A RESOLUTION PASSED AND ADOPTED BY THE CITY OF SANTA CLARA, AT A REGULAR MEETING THEREOF HELD ON THE ___ DAY OF JULY, 2014, BY THE FOLLOWING VOTE:

AYES: COUNCILORS:

NOES: COUNCILORS:

ABSENT: COUNCILORS:

ABSTAINED: COUNCILORS:

ATTEST: _____

ROD DIRIDON, JR.
CITY CLERK
CITY OF SANTA CLARA

Attachments incorporated by reference: Policy & Procedure 004

Meeting Date: 7/1/14

AGENDA REPORT

City of Santa Clara, California

Agenda Item # 6B-1

Date: June 17, 2014

To: City Manager for Council Action

From: Director of Electric Utility

Subject: Approval of a Neighborhood Solar Program Agreement with the Muslim Community Association of San Francisco Bay Area for the Installation of a Solar Electric System

EXECUTIVE SUMMARY:

The Neighborhood Solar Program (NSP) was initiated in October, 2002 and allows residents and businesses in Santa Clara to make voluntary contributions to help fund the installation of PV systems at local non-profit institutions and schools within the City. Funds to support the Neighborhood Solar Program are also collected through customer participation Santa Clara Green Power (SCGP), with $2 of every $15 Renewable Energy Credit purchased reserved for NSP.

As with past NSP projects, a list of eligible non-profits in Santa Clara was developed from customer nominations and Silicon Valley Power (SVP) staff research, and customers who donate directly to the program were asked to vote for the next recipients of solar system grants. The Muslim Community Association of San Francisco Bay Area (MCA) was one of the selected recipients. Staff is requesting approval to enter into this Agreement to provide solar to the Muslim Community Association. A copy of the Neighborhood Solar Program Agreement can be viewed on the City's website or is available in the City Clerk's Office for review during normal business hours.

ADVANTAGES AND DISADVANTAGES OF ISSUE:

The solar electric system at MCA will increase the amount grid-connected renewable energy generated within the City. In addition to helping to meet a Council goal of more solar energy within the City, solar electric systems for non-profit groups provide an extra benefit to Santa Clara. As attested to by past solar grant recipients, every dollar saved in electricity costs by having a portion of the electricity generated by solar can be re-invested back into their community programs. Local support for this program has been strong as evidenced by the continued donations and support for the Neighborhood Solar Program by the Santa Clara community.

ECONOMIC/FISCAL IMPACT:

The cost of the solar electric system at MCA will be funded by surplus funds collected by SCGP over the past few years along with customer donations to the Neighborhood Solar Program. MCA was awarded a $100,000.00 project grant. Sufficient funds are available in the Electric Department operating budget Contractual Services/Not Classified account 091-1321-87870-[I]9264-[F]94100.

RECOMMENDATION:

That Council approve, and authorize the City Manager to execute, a Neighborhood Solar Program Agreement with the Muslim Community Association of San Francisco Bay Area, in an amount not to exceed $100,000.00, for the installation of a solar electric system as part of the Neighborhood Solar Program.

John C. Roukema
Director of Electric Utility

Certified as to Availability of Funds:
091-1321-87870 $100,000.00

Gary Ameling
Director of Finance/Assistant City Manager

APPROVED:

Julio J. Fuentes
City Manager

MAJORITY VOTE OF COUNCIL

Documents Related to this Report:

1) Neighborhood Solar Program Agreement with Muslim Community Association of San Francisco Bay Area

EBIX Insurance No. S200002794

NEIGHBORHOOD SOLAR PROGRAM AGREEMENT BY AND BETWEEN CITY OF SANTA CLARA, CALIFORNIA AND MUSLIM COMMUNITY ASSOCIATION OF SAN FRANCISCO BAY AREA

PREAMBLE

This agreement ("Agreement") is made and entered into on this _____ day of _____, 2014, ("Effective Date") by and between Muslim Community Association of San Francisco Bay Area, a California corporation, with its principal place of business located at 3003 Scott Blvd. Santa Clara, CA 95054 ("Non-Profit Entity"), and the City of Santa Clara, California, a chartered California municipal corporation with its primary business address at 1500 Warburton Avenue, Santa Clara, California 95050 ("City"). City and Non-Profit Entity may be referred to individually as a "Party" or collectively as the "Parties" or the "Parties to this Agreement."

RECITALS

A. City's Electric Utility, doing business as Silicon Valley Power ("SVP"), has implemented a program to provide financial assistance to encourage the installation of photovoltaic systems on facilities owned by non-profit entities located within the City of Santa Clara; and,

B. The Neighborhood Solar Program, created by voluntary contributions received from participating SVP customers, will be used to pay the costs of installation of the photovoltaic systems; and,

C. The installation of photovoltaic generation systems is consistent with the legislative intent of AB 1890 for the expenditure of Public Benefit Funds and is an appropriate installation on non-profit facilities in California; and,

D. Non-Profit Entity has been chosen as a qualified candidate for the receipt of funds collected through the Neighborhood Solar Program and has indicated that it wishes to participate in the benefits available through the Neighborhood Solar Program for installation of a photovoltaic system at its facilities.

The Parties agree as follows:

1. PROJECT DESCRIPTION.

City staff will assist Non-Profit Entity in identifying a qualified solar installer and evaluating system proposals. Once a qualified installer and proposal are selected, City agrees to pay for the installation of a roof-mounted solar electric system at Non-Profit Entity's facility in the City of Santa Clara. The system must adhere to all legal and safety

requirements related to the installation of a photovoltaic system within the City of Santa Clara and must be properly permitted through the City's permit center.

In addition to the photovoltaic system, the City of Santa Clara will also pay for the installation of a web-based monitoring system to monitor power generation at Non-Profit Entity's premises. The purpose of this monitoring system is to provide information about the amount of power generated by the photovoltaic system to the general public for informational purposes. The size of the photovoltaic system to be installed at Non-Profit Entity's facility will be determined by the amount of funding available from the Neighborhood Solar Program donations at the time of installation.

The Neighborhood Solar Program, initiated in October of 2002, allows residents and businesses in the City of Santa Clara to make voluntary contributions to help fund the installation of photovoltaic systems at local non-profit institutions and schools within the City. Upon completion of the most recent Neighborhood Solar Program project at Bill Wilson Center, participants in the Program were asked to vote for the recipient of the next system funded by the program. Non-Profit Entity was nominated and subsequently selected to receive the next system.

2. TERM OF AGREEMENT.

Unless otherwise set forth in this Agreement or unless this paragraph is subsequently modified by a written amendment to this Agreement, the term of this Agreement shall begin on the Effective Date of this Agreement and terminate on December 31, 2014.

3. PROOF OF NON-PROFIT STATUS.

As a prerequisite for City approval of this Agreement, Non-Profit Entity shall provide City with current written proof that Non-Profit Entity has qualified for and has complied with all conditions required to attain and maintain the status of a non-profit organization, as that status is defined under Federal Internal Revenue Code, Section 501(c)(3), and State of California Franchise Tax Board under California Revenue and Taxation Code Section 23701. Non-Profit Entity shall provide such proof of non-profit status to the Office of the City Clerk at the City of Santa Clara within ten (10) days of the Effective Date of this Agreement.

4. MONITORING OF SERVICES.

City may monitor the Services performed under this Agreement to determine whether Non-Profit Entity's operation conforms to City policy and to the terms of this Agreement. City may also monitor the Services to be performed to determine whether financial operations are conducted in accord with applicable City, county, state, and federal requirements. If any action of Non-Profit Entity constitutes a breach, City may terminate this Agreement pursuant to the provisions described herein.

5. OBLIGATIONS OF NON-PROFIT ENTITY.

As a prerequisite to the distribution of funds from the Neighborhood Solar Program under the terms of this Agreement, Non-Profit Entity shall perform the following services ("the Services"):

A. Coordinate and cooperate with SVP on the location of installation of a photovoltaic system on its facilities located in the City of Santa Clara at 3003 Scott Blvd. Santa Clara, CA 95054;

B. Negotiate and execute a construction contract for the design, procurement, construction and inspection of the photovoltaic system and manage all work required to successfully complete the installation of the photovoltaic system to the City's satisfaction;

C. Ensure that the construction contractor contracting for the installation of the photovoltaic system ("Installer") holds a currently active C10 Electrical Contractor license and C46 Solar Contractor license, both issued by the California Contractors State License Board;

D. Ensure that the installer has previously performed at least five (5) similar installations of photovoltaic systems of similar size, design, complexity and cost of the photovoltaic system installed at Non-Profit Entity's facility;

E. Maintain the photovoltaic system according to the manufacturer's specifications and notify Installer of any maintenance issues at Non-Profit Entity's sole expense during the warranty period for the photovoltaic system, as well as during the retention and maintenance period set forth in Section 7 of this Agreement;

F. Maintain the photovoltaic system according to manufacturer's specifications at Non-Profit Entity's sole expense after the warranty period on the photovoltaic system expires;

G. Allow demonstration tours of the photovoltaic system, upon reasonable notice by City;

H. Provide access to a high speed Internet connection onsite to connect the web-based power monitoring system;

I. Permit reasonable inspection by City of any and all records, writings, books or other documents related to the photovoltaic system installation, operation and maintenance; and

J. Ensure that the Installer chosen to install the photovoltaic system meets the required insurance requirements for this project.

6. OBLIGATIONS OF CITY.

A. Recommend a group of potentially qualified photovoltaic system installers and assist Non-Profit Entity in identifying the type and quantity of equipment which Non-Profit Entity should include in its photovoltaic system, including the inverter, electrical connections and meters;

B. Coordinate with Non-Profit Entity to determine the location of installation of the photovoltaic system;

C. Administer the collection and expenditure of all Neighborhood Solar Program funds;

D. Provide payment for cost of photovoltaic system and installation;

E. Provide payment for web-based monitoring system to educate community on system production; and

F. Notify Non-Profit Entity prior to organizing any tours of and demonstrations of the photovoltaic system.

7. PHOTOVOLTAIC SYSTEM RETENTION AND MAINTENANCE.

Non-Profit Entity shall retain, operate and maintain in full use, the photovoltaic system which is installed on its facilities under the terms of this Agreement for not less than ten (10) years, unless this requirement is subsequently waived by express written consent of City. Non-Profit Entity shall be responsible for the safe installation and all operation and maintenance expenses of the photovoltaic system. City shall have no obligations regarding the operation and maintenance of the photovoltaic system.

8. TERMINATION OF AGREEMENT.

City may terminate this Agreement for cause by giving Non-Profit Entity written notice ("Notice of Termination") which clearly expresses City's intent to terminate the Agreement. Notice of Termination shall become effective no less than thirty (30) calendar days after Non-Profit Entity receives such notice. "For Cause" is defined for purposes of this Agreement as unreasonable failure to satisfy the obligations listed in Section 5 of this Agreement. Upon termination of this Agreement for cause, City shall have no obligations to pay any expenses beyond thirty calendar days from issuance of the Notice of Termination.

9. NO ASSIGNMENT OR SUBCONTRACTING OF AGREEMENT.

City and Non-Profit Entity bind themselves, their successors and assigns to all covenants of this Agreement. This Agreement shall not be assigned or transferred without the prior written approval of City.

10. NO THIRD PARTY BENEFICIARY.

This Agreement shall not be construed to be an agreement for the benefit of any third party or parties and no third party or parties shall have any claim or right of action under this Agreement for any cause whatsoever.

11. INDEPENDENT CONTRACTOR.

Non-Profit Entity and all person(s) employed by or contracted with by Non-Profit Entity to furnish labor and/or materials under this Agreement are independent contractors and do not act as agent(s) or employee(s) of City. Non-Profit Entity has full rights, however, to manage its employees in their performance of Services under this Agreement. Non-Profit Entity is not authorized to bind City to any contracts or other obligations.

12. USE OF CITY NAME OR EMBLEM.

Non-Profit Entity shall not use City's name, insignia, or emblem, or distribute any information related to services under this Agreement in any magazine, trade paper, newspaper or other medium without express written consent of City.

13. RIGHT OF CITY TO INSPECT RECORDS OF NON-PROFIT ENTITY.

City, through its authorized employees, representatives or agents shall have the right during the term of this Agreement and for three (3) years from the date of final payment for goods or services provided under this Agreement, to audit the books and records of Non-Profit Entity for the purpose of verifying any and all charges made by Non-Profit Entity in connection with the photovoltaic system installation under this Agreement. Non-Profit Entity agrees to maintain sufficient books and records in accordance with generally accepted accounting principles to establish the correctness of all charges submitted to City. Any expenses not so recorded shall be disallowed by City.

Non-Profit Entity shall submit to City any and all reports concerning its performance under this Agreement that may be requested by City in writing. Non-Profit Entity agrees to assist City in meeting City's reporting requirements to the State and other agencies.

14. FAIR EMPLOYMENT.

Non-Profit Entity shall not discriminate against any employee or contractor because of race, color, creed, national origin, gender, sexual orientation, age, disability, religion, ethnic background, or marital status, in violation of state or federal law.

15. HOLD HARMLESS/INDEMNIFICATION.

To the extent permitted by law, Non-Profit Entity agrees to protect, defend, hold harmless and indemnify City, its City Council, commissions, officers, employees, volunteers and agents from and against any claim, injury, liability, loss, cost, and/or expense or damage, including all costs and reasonable attorney's fees in providing a defense to any claim arising therefrom, for which City shall become liable arising from Non-Profit Entity's

negligent, reckless or wrongful acts, errors, or omissions with respect to or in any way connected with the Services performed by Non-Profit Entity pursuant to this Agreement.

16. INSURANCE REQUIREMENTS.

During the term of this Agreement, and for any time period set forth in Exhibit B, Non-Profit Entity shall purchase and maintain in full force and effect, at no cost to City insurance policies with respect to employees and vehicles assigned to the Performance of Services under this Agreement with coverage amounts, required endorsements, certificates of insurance, and coverage verifications as defined in Exhibit B.

17. AMENDMENTS.

This Agreement may be amended only with the written consent of both Parties.

18. INTEGRATED DOCUMENT.

This Agreement represents the entire agreement between City and Non-Profit Entity. No other understanding, agreements, conversations, or otherwise, with any representative of City prior to execution of this Agreement shall affect or modify any of the terms or obligations of this Agreement. Any verbal agreement shall be considered unofficial information and is not binding upon City.

19. SEVERABILITY CLAUSE.

In case any one or more of the provisions in this Agreement shall, for any reason, be held invalid, illegal or unenforceable in any respect, it shall not affect the validity of the other provisions, which shall remain in full force and effect.

20. NOTICES.

All notices to the Parties shall, unless otherwise requested in writing, be sent to City addressed as follows:

City of Santa Clara
Attention: Electric Department
1500 Warburton Avenue
Santa Clara, California 95050
or by facsimile at (408) 261-2717

And to Non-Profit Entity addressed as follows:
Muslim Community Association (MCA) Foundation
3003 Scott Blvd.
Santa Clara, CA 95054
or by facsimile at (408) 970-9561

If notice is sent via facsimile, a signed, hard copy of the material shall also be mailed. The workday the facsimile was sent shall control the date notice was deemed given if there is a facsimile machine generated document on the date of transmission. A facsimile

transmitted after 1:00 p.m. on a Friday shall be deemed to have been transmitted on the following Monday.

21. CAPTIONS.

The captions of the various sections, paragraphs and subparagraphs of this Agreement are for convenience only and shall not be considered or referred to in resolving questions of interpretation.

22. LAW GOVERNING CONTRACT AND VENUE.

This Agreement shall be governed and construed in accordance with the statutes and laws of the State of California. The venue of any suit filed by either Party shall be vested in the state courts of the County of Santa Clara, or if appropriate, in the United States District Court, Northern District of California, San Jose, California.

The Parties acknowledge and accept the terms and conditions of this Agreement as evidenced by the following signatures of their duly authorized representatives. It is the intent of the Parties that this Agreement shall become operative on the Effective Date.

CITY OF SANTA CLARA, CALIFORNIA
a chartered California municipal corporation

APPROVED AS TO FORM:

RICHARD E. NOSKY, JR.
City Attorney

ATTEST:

ROD DIRIDON, JR.
City Clerk

JULIO J. FUENTES
City Manager
1500 Warburton Avenue
Santa Clara, CA 95050
Telephone: (408) 615-2210
Fax: (408) 241-6771

"CITY"

MUSLIM COMMUNITY ASSOCIATION OF SAN FRANCISCO BAY AREA
a California corporation

By: _____
ATIF IBRAHIM
Title: Treasurer, Board of Trustees MCA
Address: 3003 Scott Blvd.
Santa Clara, CA 95054
Telephone: (408) 727-7277
Fax: (408) 970-9561

"NON-PROFIT ENTITY"

AGREEMENT FOR THE PERFORMANCE OF SERVICES
BY AND BETWEEN
CITY OF SANTA CLARA, CALIFORNIA
AND
MUSLIM COMMUNITY ASSOCIATION OF SAN FRANCISCO BAY AREA

EXHIBIT A

SVP GENERATION STANDARDS

The Silicon Valley Power Generation Standards are attached to this Exhibit A and are hereby incorporated by reference.

AGREEMENT FOR THE PERFORMANCE OF SERVICES
BY AND BETWEEN
CITY OF SANTA CLARA, CALIFORNIA
AND
MUSLIM COMMUNITY ASSOCIATION OF SAN FRANCISCO BAY AREA

EXHIBIT B

SCHEDULE OF FEES

In no event shall the amount billed to the City by Contractor for services under this Agreement exceed one hundred thousand dollars ($100,000.00), subject to budget appropriations.

AGREEMENT FOR THE PERFORMANCE OF SERVICES
BY AND BETWEEN
CITY OF SANTA CLARA, CALIFORNIA
AND
MUSLIM COMMUNITY ASSOCIATION OF SAN FRANCISCO BAY AREA

EXHIBIT C

INSURANCE REQUIREMENTS

INSURANCE COVERAGE REQUIREMENTS

During the term of this Agreement, Contractor shall purchase and maintain the following insurance policies with the indicated policy limits and endorsements:

A. Commercial General Liability (CGL), with policy limits not less than $1,000,000 for each occurrence covering bodily injury and property damage;

   1. CGL Primary Insurance Endorsement; and

   2. This CGL policy shall include an endorsement which adds the City of Santa Clara, its Council, employees, and officers as additional insureds.

B. Business Automotive Liability (BAL), with policy limits not less than $1,000,000; and

C. Workers' Compensation and Employers' Liability with policy limits of California statutory limits.

All insurance certificates, endorsements, coverage verifications and other items required pursuant to this Agreement shall be mailed directly to the City's insurance compliance representative as follows:

EBIX Inc.
City of Santa Clara Electric Department
P.O. 12010-S2 or 151 North Lyon Avenue
Hemet, CA 92546-8010 Hemet, CA 92543

Telephone number: 951-766-2280
Fax number: 770-325-0409
Email address: ctsantaclara@ebix.com

Meeting Date: 7/1/14

AGENDA REPORT

City of Santa Clara, California

Agenda Item # 6B-2

Santa Clara All-America City 2001

Date: June 17, 2014

To: City Manager for Council Action

From: John C. Roukema, Director of Electric Utility

Subject: Adoption of a Resolution Granting Authority to the City Manager to Approve and Execute Fiber Lease Agreements

EXECUTIVE SUMMARY:

In 1995, Council approved the construction of a backbone fiber optics network for the Electric Department and for General Government communication needs that included added capacity for the leasing of fiber and the provision of other services to third parties. As of July 1, 2000, the backbone fiber optics network was substantially completed and notice of completion was delivered to the first dark fiber lessee.

From time to time staff negotiates long-term fiber optic lease agreements with new and existing customers. These leases allow for an irrevocable right to use for a defined period in return for lease payments to the City. Revenues from existing fiber lease agreements are more than $2.2 million a year. While the majority of the agreements will be maintained as public record, specific term and pricing provisions are confidential and are available for Council review in the Office of the City Clerk. A copy of the standard form of the Fiber Lease Agreement can be viewed on the City's website or is available in the City Clerk's Office for review during normal business hours.

ADVANTAGES AND DISADVANTAGES OF ISSUE:

The fiber lease agreements allow Silicon Valley Power (SVP) to continue to maintain fiber for communication requirements necessary for reliable system operation while producing revenue. The leases may require additional investment in the fiber optic backbone network as negotiated in the lease agreement and will require operational and administrative attention. These requirements will be met by existing personnel and contracted services.

ECONOMIC/FISCAL IMPACT:

Fiber lease agreements currently contribute more than $2.2 million a year to the Electric Department. Entering into new fiber lease agreements is expected to grow this revenue. No additional allocation of funds is required to execute a fiber lease agreement.

RECOMMENDATION:

That Council adopt the Resolution Granting Authority to the City Manager to Approve and Execute Fiber Lease Agreements.

APPROVED:

John C. Roukema
Director of Electric Utility

Julio J. Fuentes
City Manager

Documents Related to this Report:

1) Resolution

RESOLUTION NO. _____

A RESOLUTION OF THE CITY OF SANTA CLARA, CALIFORNIA GRANTING AUTHORITY TO APPROVE AND EXECUTE FIBER LEASE AGREEMENTS

BE IT RESOLVED BY THE CITY OF SANTA CLARA AS FOLLOWS:

WHEREAS, in 1995 City Council of the City of Santa Clara approved the construction of a backbone fiber optics network for the Electric Department and for General communication needs; and

WHEREAS, this fiber optics network included added capacity for the leasing of fiber and the provision of other services to third parties; and

WHEREAS, as of July 1, 2000, the backbone fiber optics network was substantially completed and notice of completion was delivered to the first dark fiber lessee; and

WHEREAS, the City's Fiber Lease Agreement allows Silicon Valley Power, the City's Electric Utility, to continue to maintain fiber for communication requirements necessary for reliable system operation while producing revenue; and

NOW THEREFORE, BE IT FURTHER RESOLVED BY THE CITY OF SANTA CLARA AS FOLLOWS:

1. That Council delegate authority to the City Manager, or his designee, to approve and execute customer Fiber Lease Agreements on behalf of the City.

2. That the authorization herein provided is subject to submission by the Electric Department to City Council an informational memorandum containing the details of such agreements within twenty (20) days of each such execution.

3. Constitutionality, severability. If any section, subsection, sentence, clause, phrase, or word of this resolution is for any reason held by a court of competent jurisdiction to be unconstitutional or

invalid for any reason, such decision shall not affect the validity of the remaining portions of the resolution. The City of Santa Clara, California, hereby declares that it would have passed this resolution and each section, subsection, sentence, clause, phrase, and word thereof, irrespective of the fact that any one or more section(s), subsection(s), sentence(s), clause(s), phrase(s), or word(s) be declared invalid.

4. Effective date. This resolution shall become effective immediately.

I HEREBY CERTIFY THE FOREGOING TO BE A TRUE COPY OF A RESOLUTION PASSED AND ADOPTED BY THE CITY OF SANTA CLARA, AT A REGULAR MEETING THEREOF HELD ON THE ___ DAY OF _____, 2014, BY THE FOLLOWING VOTE:

AYES: COUNCILORS:

NOES: COUNCILORS:

ABSENT: COUNCILORS:

ABSTAINED: COUNCILORS:

ATTEST: _____
ROD DIRIDON, JR.
CITY CLERK
CITY OF SANTA CLARA

Attachments incorporated by reference: None

S:\Attorney\RESOLUTIONS\Form Resolution-City.doc

Meeting Date: 7/1/14

AGENDA REPORT

City of Santa Clara, California

Agenda Item # 6B-3

Santa Clara All-America City 2001

Date: June 10, 2014

To: City Manager for Council Action

From: Director of Electric Utility

Subject: Approval of an Agreement for the Performance of Services with Vicki Vanderburg, Inc., dba Power Systems Operations, for VERA Validation Software Updates for the Electric Department's Resources/Power Trading Division

EXECUTIVE SUMMARY:

As a result of the California Independent System Operator (CAISO) change from an hourly price market to a fifteen minute market, Silicon Valley Power's VERA data validation software package will require substantial changes in current algorithm codes in order to properly validate CAISO transactions. Staff recommends entering into an Agreement for the Performance of Services with Vicki Vanderburg, Inc., dba Power Systems Operations to incorporate these charges into the current VERA Validation Software system. A copy of the Agreement for the Performance of Services can be viewed on the City's website or is available in the City Clerk's Office for review during normal business hours.

ADVANTAGES AND DISADVANTAGES OF ISSUE:

Entering into this Agreement will allow SVP to receive support from a larger, knowledgeable staff for updates to existing applications, as well as future applications required by an ever changing market.

ECONOMIC/FISCAL IMPACT:

The total cost of this Agreement shall not exceed $203,000.00. Sufficient funds have been budgeted for FY 2014-15 in the Electric Department Contractual Services/Not Classified account, 091-1358-87870-[F]92300.

RECOMMENDATION:

That Council approve, and authorize the City Manager to execute, an Agreement for the Performance of Services with Vickie Vanderburg, Inc., dba Power Systems Operations, in an amount not to exceed $203,000.00, for VERA Validation Software Updates to support the Electric Department's Resources/Power Trading Division.

John C. Roukema
Director of Electric Utility

Certified as to Budget Form:
Account No. 091-1358-87870 $203,000.00

Gary Ameling
Director of Finance/Assistant City Manager

APPROVED:

Julio J. Fuentes
City Manager

MAJORITY VOTE OF COUNCIL

Documents Related to this Report:

1) ***Agreement for the Performance of Services with Vicki Vanderberg, Inc., dba Power Systems Operations***

EBIX Insurance No. S200001581

AGREEMENT FOR THE PERFORMANCE OF SERVICES BY AND BETWEEN THE CITY OF SANTA CLARA, CALIFORNIA, AND VICKI VANDERBURG, INC. DBA POWER SYSTEMS OPERATIONS

PREAMBLE

This agreement for the performance of services ("Agreement") is made and entered into on this _____ day of _____, 2014, ("Effective Date") by and between Vicki Vanderburg, Inc. dba Power Systems Operations, a Washington corporation, with its principal place of business located at 3204 116th Ave, NE, Bellevue, WA 98004 ("Contractor"), and the City of Santa Clara, California, a chartered California municipal corporation with its primary business address at 1500 Warburton Avenue, Santa Clara, California 95050 ("City"). City and Contractor may be referred to individually as a "Party" or collectively as the "Parties" or the "Parties to this Agreement."

RECITALS

A. City desires to secure professional services more fully described in this Agreement, at Exhibit A, entitled "Scope of Services"; and

B. Contractor represents that it, and its subcontractors, if any, have the professional qualifications, expertise, necessary licenses and desire to provide certain goods and/or required services of the quality and type which meet objectives and requirements of City; and,

C. The Parties have specified herein the terms and conditions under which such services will be provided and paid for.

The Parties agree as follows:

AGREEMENT PROVISIONS

1. EMPLOYMENT OF CONTRACTOR.

City hereby employs Contractor to perform services set forth in this Agreement. To accomplish that end, City may assign a Project Manager to personally direct the Services to be provided by Contractor and will notify Contractor in writing of City's choice. City shall pay for all such materials and services provided which are consistent with the terms of this Agreement.

2. SERVICES TO BE PROVIDED.

Except as specified in this Agreement, Contractor shall furnish all technical and professional services, including labor, material, equipment, transportation, supervision and expertise (collectively referred to as "Services") to satisfactorily complete the work required by City at his/her own risk and expense. Services to be provided to City are

more fully described in Exhibit A entitled "SCOPE OF SERVICES." All of the exhibits referenced in this Agreement are attached and are incorporated by this reference.

3. COMMENCEMENT AND COMPLETION OF SERVICES.

A. Contractor shall begin providing the services under the requirements of this Agreement upon receipt of written Notice to Proceed from City. Such notice shall be deemed to have occurred three (3) calendar days after it has been deposited in the regular United States mail. Contractor shall complete the Services within the time limits set forth in the Scope of Services or as mutually determined in writing by the Parties.

B. When City determines that Contractor has satisfactorily completed the Services, City shall give Contractor written Notice of Final Acceptance. Upon receipt of such notice, Contractor shall not incur any further costs under this Agreement. Contractor may request this determination of completion be made when, in its opinion, the Services have been satisfactorily completed. If so requested by the contractor, City shall make this determination within fourteen (14) days of its receipt of such request.

4. QUALIFICATIONS OF CONTRACTOR - STANDARD OF WORKMANSHIP.

Contractor represents and maintains that it has the necessary expertise in the professional calling necessary to perform services, and its duties and obligations, expressed and implied, contained herein, and City expressly relies upon Contractor's representations regarding its skills and knowledge. Contractor shall perform such services and duties in conformance to and consistent with the professional standards of a specialist in the same discipline in the State of California.

The plans, designs, specifications, estimates, calculations, reports and other documents furnished under Exhibit A shall be of a quality acceptable to City. The criteria for acceptance of the work provided under this Agreement shall be a product of neat appearance, well organized, that is technically and grammatically correct, checked and having the maker and checker identified. The minimum standard of appearance, organization and content of the drawings shall be that used by City for similar projects.

5. TERM OF AGREEMENT.

Unless otherwise set forth in this Agreement or unless this paragraph is subsequently modified by a written amendment to this Agreement, the term of this Agreement shall begin on the Effective Date of this Agreement and terminate at the end of the day one (1) years from the effective date.

6. MONITORING OF SERVICES.

City may monitor the Services performed under this Agreement to determine whether Contractor's operation conforms to City policy and to the terms of this Agreement. City may also monitor the Services to be performed to determine whether financial operations are conducted in accord with applicable City, county, state, and federal requirements. If

any action of Contractor constitutes a breach, City may terminate this Agreement pursuant to the provisions described herein.

7. WARRANTY.

Contractor expressly warrants that all materials and services covered by this Agreement shall be fit for the purpose intended, shall be free from defect, and shall conform to the specifications, requirements, and instructions upon which this Agreement is based. Contractor agrees to promptly replace or correct any incomplete, inaccurate, or defective Services at no further cost to City when defects are due to the negligence, errors or omissions of Contractor. If Contractor fails to promptly correct or replace materials or services, City may make corrections or replace materials or services and charge Contractor for the cost incurred by City.

8. PERFORMANCE OF SERVICES.

Contractor shall perform all requested services in an efficient and expeditious manner and shall work closely with and be guided by City. Contractor shall be as fully responsible to City for the acts and omissions of its subcontractors, and of persons either directly or indirectly employed by them, as Contractor is for the acts and omissions of persons directly employed by it. Contractor will perform all Services in a safe manner and in accordance with all federal, state and local operation and safety regulations.

9. RESPONSIBILITY OF CONTRACTOR.

Contractor shall be responsible for the professional quality, technical accuracy and coordination of the Services furnished by it under this Agreement. Neither City's review, acceptance, nor payments for any of the Services required under this Agreement shall be construed to operate as a waiver of any rights under this Agreement or of any cause of action arising out of the performance of this Agreement and Contractor shall be and remain liable to City in accordance with applicable law for all damages to City caused by Contractor's negligent performance of any of the Services furnished under this Agreement.

Any acceptance by City of plans, specifications, construction contract documents, reports, diagrams, maps and other material prepared by Contractor shall not in any respect absolve Contractor form the responsibility Contractor has in accordance with customary standards of good professional practice in compliance with applicable federal, state, county, and/or municipal laws, ordinances, regulations, rules and orders.

10. COMPENSATION AND PAYMENT.

In consideration for Contractor's complete performance of Services, City shall pay Contractor for all materials provided and services rendered by Contractor at the rate per hour for labor and cost per unit for materials as outlined in Exhibit B, entitled "SCHEDULE OF FEES."

Contractor will bill City on a monthly basis for Services provided by Contractor during the preceding month, subject to verification by City. City will pay Contractor within thirty (30) days of City's receipt of invoice.

11. TERMINATION OF AGREEMENT.

Either Party may terminate this Agreement without cause by giving the other Party written notice ("Notice of Termination") which clearly expresses that Party's intent to terminate the Agreement. Notice of Termination shall become effective no less than thirty (30) calendar days after a Party receives such notice. After either Party terminates the Agreement, Contractor shall discontinue further services as of the effective date of termination, and City shall pay Contractor for all Services satisfactorily performed up to such date.

12. NO ASSIGNMENT OR SUBCONTRACTING OF AGREEMENT.

City and Contractor bind themselves, their successors and assigns to all covenants of this Agreement. This Agreement shall not be assigned or transferred without the prior written approval of City. Contractor shall not hire subcontractors without express written permission from City.

13. NO THIRD PARTY BENEFICIARY.

This Agreement shall not be construed to be an agreement for the benefit of any third party or parties and no third party or parties shall have any claim or right of action under this Agreement for any cause whatsoever.

14. INDEPENDENT CONTRACTOR.

Contractor and all person(s) employed by or contracted with Contractor to furnish labor and/or materials under this Agreement are independent contractors and do not act as agent(s) or employee(s) of City. Contractor has full rights, however, to manage its employees in their performance of Services under this Agreement. Contractor is not authorized to bind City to any contracts or other obligations.

15. NO PLEDGING OF CITY'S CREDIT.

Under no circumstances shall Contractor have the authority or power to pledge the credit of City or incur any obligation in the name of City. Contractor shall save and hold harmless the City, its City Council, its officers, employees, boards and commissions for expenses arising out of any unauthorized pledges of City's credit by Contractor under this Agreement.

16. CONFIDENTIALITY OF MATERIAL.

All ideas, memoranda, specifications, plans, manufacturing procedures, data, drawings, descriptions, documents, discussions or other information developed or received by or for Contractor and all other written information submitted to Contractor in connection with the performance of this Agreement shall be held confidential by Contractor and shall not,

without the prior written consent of City, be used for any purposes other than the performance of the Services nor be disclosed to an entity not connected with performance of the Services. Nothing furnished to Contractor which is otherwise known to Contractor or becomes generally known to the related industry shall be deemed confidential.

17. USE OF CITY NAME OR EMBLEM.

Contractor shall not use City's name, insignia, or emblem, or distribute any information related to services under this Agreement in any magazine, trade paper, newspaper or other medium without express written consent of City.

18. OWNERSHIP OF MATERIAL.

All material, including information developed on computer(s), which shall include, but not be limited to, data, sketches, tracings, drawings, plans, diagrams, quantities, estimates, specifications, proposals, tests, maps, calculations, photographs, reports and other material developed, collected, prepared or caused to be prepared under this Agreement shall be the property of City but Contractor may retain and use copies thereof. City shall not be limited in any way or at any time in its use of said material. However, Contractor shall not be responsible for damages resulting from the use of said material for work other than Project, including, but not limited to, the release of this material to third parties.

19. RIGHT OF CITY TO INSPECT RECORDS OF CONTRACTOR.

City, through its authorized employees, representatives or agents shall have the right during the term of this Agreement and for three (3) years from the date of final payment for goods or services provided under this Agreement, to audit the books and records of Contractor for the purpose of verifying any and all charges made by Contractor in connection with Contractor compensation under this Agreement, including termination of Contractor. Contractor agrees to maintain sufficient books and records in accordance with generally accepted accounting principles to establish the correctness of all charges submitted to City. Any expenses not so recorded shall be disallowed by City.

Contractor shall submit to City any and all reports concerning its performance under this Agreement that may be requested by City in writing. Contractor agrees to assist City in meeting City's reporting requirements to the State and other agencies with respect to Contractor's Services hereunder.

20. CORRECTION OF SERVICES.

Contractor agrees to correct any incomplete, inaccurate or defective Services at no further costs to City, when such defects are due to the negligence, errors or omissions of Contractor.

21. FAIR EMPLOYMENT.

Contractor shall not discriminate against any employee or applicant for employment because of race, color, creed, national origin, gender, sexual orientation, age, disability, religion, ethnic background, or marital status, in violation of state or federal law.

22. HOLD HARMLESS/INDEMNIFICATION.

To the extent permitted by law, Contractor agrees to protect, defend, hold harmless and indemnify City, its City Council, commissions, officers, employees, volunteers and agents from and against any claim, injury, liability, loss, cost, and/or expense or damage, including all costs and reasonable attorney's fees in providing a defense to any claim arising therefrom, for which City shall become liable arising from Contractor's negligent, reckless or wrongful acts, errors, or omissions with respect to or in any way connected with the Services performed by Contractor pursuant to this Agreement.

23. INSURANCE REQUIREMENTS.

During the term of this Agreement, and for any time period set forth in Exhibit C, Contractor shall purchase and maintain in full force and effect, at no cost to City insurance policies with respect to employees and vehicles assigned to the Performance of Services under this Agreement with coverage amounts, required endorsements, certificates of insurance, and coverage verifications as defined in Exhibit C.

24. AMENDMENTS.

This Agreement may be amended only with the written consent of both Parties.

25. INTEGRATED DOCUMENT.

This Agreement represents the entire agreement between City and Contractor. No other understanding, agreements, conversations, or otherwise, with any representative of City prior to execution of this Agreement shall affect or modify any of the terms or obligations of this Agreement. Any verbal agreement shall be considered unofficial information and is not binding upon City.

26. SEVERABILITY CLAUSE.

In case any one or more of the provisions in this Agreement shall, for any reason, be held invalid, illegal or unenforceable in any respect, it shall not affect the validity of the other provisions, which shall remain in full force and effect.

27. WAIVER.

Contractor agrees that waiver by City of any one or more of the conditions of performance under this Agreement shall not be construed as waiver(s) of any other condition of performance under this Agreement.

28. NOTICES.

All notices to the Parties shall, unless otherwise requested in writing, be sent to City addressed as follows:

City of Santa Clara
Attention: [insert Dept. here]
1500 Warburton Avenue
Santa Clara, California 95050
or by facsimile at (408) 261-2717

And to Contractor addressed as follows:
Vicki Vanderburg, Inc. dba Power Systems Operations
3204 116th Ave. N.E.
Bellevue, WA 98004
or by scanned and email to vicki.vanderburg@powersysops.com

If notice is sent via facsimile/email, a signed, hard copy of the material shall also be mailed. The workday the facsimile/email was sent shall control the date notice was deemed given if there is a facsimile machine generated document on the date of transmission. A facsimile/email transmitted after 1:00 p.m. on a Friday shall be deemed to have been transmitted on the following Monday.

29. CAPTIONS.

The captions of the various sections, paragraphs and subparagraphs of this Agreement are for convenience only and shall not be considered or referred to in resolving questions of interpretation.

30. LAW GOVERNING CONTRACT AND VENUE.

This Agreement shall be governed and construed in accordance with the statutes and laws of the State of Washington. The venue of any suit filed by either Party shall be vested in the state courts of the County of King, or if appropriate, in the United States District Court, Western District of Washington, Seattle, Washington.

31. DISPUTE RESOLUTION.

A. Unless otherwise mutually agreed to by the Parties, any controversies between Contractor and City regarding the construction or application of this Agreement, and claims arising out of this Agreement or its breach, shall be submitted to mediation within thirty (30) days of the written request of one Party after the service of that request on the other Party.

B. The Parties may agree on one mediator. If they cannot agree on one mediator, the Party demanding mediation shall request the Superior Court of Santa Clara County to appoint a mediator. The mediation meeting shall not exceed one day

(eight (8) hours). The Parties may agree to extend the time allowed for mediation under this Agreement.

C. The costs of mediation shall be borne by the Parties equally.

D. For any contract dispute, mediation under this section is a condition precedent to filing an action in any court. In the event of mediation which arises out of any dispute related to this Agreement, the Parties shall each pay their respective attorney's fees, expert witness costs and cost of suit through mediation only. In the event of litigation, the prevailing Party shall recover its reasonable costs of suit, expert's fees, and attorney's fees. If mediation does not resolve the dispute, the Parties agree that the matter shall be litigated in a court of law, and not subject to the arbitration provisions of the Public Contracts Code.

32. COMPLIANCE WITH ETHICAL STANDARDS.

Contractor shall:

A. Read Exhibit D, entitled "ETHICAL STANDARDS FOR CONTRACTORS SEEKING TO ENTER INTO AN AGREEMENT WITH THE CITY OF SANTA CLARA, CALIFORNIA"; and,

B. Execute Exhibit E, entitled "AFFIDAVIT OF COMPLIANCE WITH ETHICAL STANDARDS."

33. CONFLICT OF INTERESTS.

This Agreement does not prevent either Party from entering into similar agreements with other parties. To prevent a conflict of interest, Contractor certifies that to the best of its knowledge, no City officer, employee or authorized representative has any financial interest in the business of Contractor and that no person associated with Contractor has any interest, direct or indirect, which could conflict with the faithful performance of this Agreement. Contractor is familiar with the provisions of California Government Code Section 87100 and following, and certifies that it does not know of any facts which would violate these code provisions. Contractor will advise City if a conflict arises.

(Continued on Pate 9 of 9)

///

///

///

34. PROGRESS SCHEDULE.

The Progress Schedule will be as set forth in the attached Exhibit F, entitled "MILESTONE SCHEDULE" if applicable.

The Parties acknowledge and accept the terms and conditions of this Agreement as evidenced by the following signatures of their duly authorized representatives. It is the intent of the Parties that this Agreement shall become operative on the Effective Date.

CITY OF SANTA CLARA, CALIFORNIA
a chartered California municipal corporation

APPROVED AS TO FORM:

RICHARD E. NOSKY, JR.
City Attorney

ATTEST:

ROD DIRIDON, JR.
City Clerk

JULIO J. FUENTES
City Manager
1500 Warburton Avenue
Santa Clara, CA 95050
Telephone: (408) 615-2210
Fax: (408) 241-6771

"CITY"

VICKI VANDERBURG, INC.
DBA POWER SYSTEMS OPERATIONS
a Washington corporation

By: Vicki M Vanderburg
VICKI VANDERBURG
Title: President
Address: 3204 116th Ave. N.E.
Bellevue, WA 98004
Telephone: (425) 681-0185

"CONTRACTOR"

AGREEMENT FOR THE PERFORMANCE OF SERVICES
BY AND BETWEEN THE
CITY OF SANTA CLARA, CALIFORNIA,
AND
VICKI VANDERBURG, INC. DBA POWER SYSTEMS OPERATIONS

EXHIBIT A

SCOPE OF SERVICES

The Services to be performed for the City by the Contractor under this Agreement are more fully described in the Contractor's proposal entitled, "Fiscal Year 2015" dated April 17, 2014, which is attached to this Exhibit A.

Power Systems Operations

3204 116th Ave NE
Bellevue, WA 98004

April 17, 2014

Betty Sargent
Electric Division Manager
Silicon Valley Power
1601 Civic Center Drive, Suite 201
Santa Clara, CA 95050

Fiscal Year 2015

Dear Betty,

Power Systems Operations (PSO) is looking forward to continuing to work with you to aid Silicon Valley Power (SVP) in continuing to support your power trading operations in the areas of scheduling and settlements. This letter outlines the tasks to be completed during the Fiscal Year 2015

Project Scope

We propose to assist SVP in the following areas during Fiscal Year 2015 (July 1, 2014 thru June 30, 2015):

Software and Systems Support

ACES and System Support – Estimated at 6 person-hours per week. This includes 7/24 support for ACES, SVP Meter Monitor (SMM), and SVP Schedule Transmit (SST) programs. $31,200

Software Development and Implementation

SST Enhancements

- Support changes required for bidding ancillary service on units scheduled through NCPA – $6,000

VERA Implementation and Reconciliations

- Tom Breckon NCPA settlement changes (FERC order 764 and non MSS) - $12,000
- Reconciliation spreadsheets to document differences with NCPA statements (MSS, PGA/LEC and nonMSS) (Heather/Jay) $28,800

- Implement changes for FERC Order 764 and non MSS settlements - $72,000
- Other ISO Market Changes - $12,000
- PI System cutover, update reports and equations - $3000

VERA Reports

- nMarket reports support - $7500
- ARB report support - $7500
- Various Scheduling Reports - $7500
- NCPA Statement vs ARB - $7500

Hardware Support

- Support SVP IT teams in migrating VERA to new hardware - $3000

Travel Expenses – Approximately $5,000 per year

Total estimated cost for Fiscal Year 2015 $203,000

Sincerely,

Vicki Vanderburg

Principal

Power Systems Operations

AGREEMENT FOR THE PERFORMANCE OF SERVICES
BY AND BETWEEN THE
CITY OF SANTA CLARA, CALIFORNIA,
AND
VICKI VANDERBURG, INC. DBA POWER SYSTEMS OPERATIONS

EXHIBIT B

FEE SCHEDULE

In no event shall the amount billed to City by Contractor for services under this Agreement exceed two hundred three thousand dollars ($203,000.00), subject to budget appropriations.

AGREEMENT FOR THE PERFORMANCE OF SERVICES
BY AND BETWEEN THE
CITY OF SANTA CLARA, CALIFORNIA,
AND
POWER SYSTEMS OPERATIONS

EXHIBIT C

INSURANCE REQUIREMENTS

Without limiting the Contractor's indemnification of the City, and prior to commencing any of the Services required under this Agreement, the Contractor shall purchase and maintain in full force and effect, at its sole cost and expense, the following insurance policies with at least the indicated coverages, provisions and endorsements:

A. COMMERCIAL GENERAL LIABILITY INSURANCE

1. Commercial General Liability Insurance policy which provides coverage at least as broad as Insurance Services Office form CG 00 01. Policy limits are subject to review, but shall in no event be less than, the following:

   $1,000,000 each occurrence
   $1,000,000 general aggregate
   $1,000,000 products/completed operations aggregate
   $1,000,000 personal injury

2. Exact structure and layering of the coverage shall be left to the discretion of Contractor; however, any excess or umbrella policies used to meet the required limits shall be at least as broad as the underlying coverage and shall otherwise follow form.

3. The following provisions shall apply to the Commercial Liability policy as well as any umbrella policy maintained by the Contractor to comply with the insurance requirements of this Agreement:

   a. Coverage shall be on a "pay on behalf" basis with defense costs payable in addition to policy limits;

   b. There shall be no cross liability exclusion which precludes coverage for claims or suits by one insured against another; and

   c. Coverage shall apply separately to each insured against whom a claim is made or a suit is brought, except with respect to the limits of liability.

B. BUSINESS AUTOMOBILE LIABILITY INSURANCE

Business automobile liability insurance policy which provides coverage at least as broad as ISO form CA 00 01, with minimum policy limits of not less than one million dollars ($1,000,000) each accident using, or providing coverage at least as broad as, Insurance Services Office form CA 00 01. Liability coverage shall apply to all owned, non-owned and hired autos.

C. WORKERS' COMPENSATION

1. Workers' Compensation Insurance Policy as required by statute and employer's liability with the following limits: at least one million dollars ($1,000,000) policy limit Illness/Injury by disease, and one million dollars ($1,000,000) for each Accident/Bodily Injury.

2. The indemnification and hold harmless obligations of Contractor included in this Agreement shall not be limited in any way by any limitation on the amount or type of damage, compensation or benefit payable by or for Contractor or any subcontractor under any Workers' Compensation Act(s), Disability Benefits Act(s) or other employee benefits act(s).

3. This policy must include a Waiver of Subrogation in favor of the City of Santa Clara, its City Council, commissions, officers, employees, volunteers and agents.

D. COMPLIANCE WITH REQUIREMENTS

All of the following clauses and/or endorsements, or similar provisions, must be part of each commercial general liability policy, and each umbrella or excess policy.

1. Additional Insureds. City of Santa Clara, its City Council, commissions, officers, employees, volunteers and agents are hereby added as additional insureds in respect to liability arising out of Contractor's work for City, using Insurance Services Office (ISO) Endorsement CG 20 10 11 85 or the combination of CG 20 10 03 97 and CG 20 37 10 01, or its equivalent.

2. Primary and non-contributing. Each insurance policy provided by Contractor shall contain language or be endorsed to contain wording making it primary insurance as respects to, and not requiring contribution from, any other insurance which the indemnities may possess, including any self-insurance or self-insured retention they may have. Any other insurance indemnities may possess shall be considered excess insurance only and shall not be called upon to contribute with Contractor's insurance.

3. Cancellation.

   a. Each insurance policy shall contain language or be endorsed to reflect that no cancellation or modification of the coverage provided due to non-payment of premiums shall be effective until written notice has been given

to City at least ten (10) days prior to the effective date of such modification or cancellation. In the event of non-renewal, written notice shall be given at least ten (10) days prior to the effective date of non-renewal.

b. Each insurance policy shall contain language or be endorsed to reflect that no cancellation or modification of the coverage provided for any cause save and except non-payment of premiums shall be effective until written notice has been given to City at least thirty (30) days prior to the effective date of such modification or cancellation. In the event of non-renewal, written notice shall be given at least thirty (30) days prior to the effective date of non-renewal.

4. Other Endorsements. Other endorsements may be required for policies other than the commercial general liability policy if specified in the description of required insurance set forth in Sections A through D of this Exhibit C, above.

E. ADDITIONAL INSURANCE RELATED PROVISIONS

Contractor and City agree as follows:

1. Contractor agrees to ensure that subcontractors, and any other party involved with the Services, who is brought onto or involved in the performance of the Services by Contractor, provide the same minimum insurance coverage required of Contractor, except as with respect to limits. Contractor agrees to monitor and review all such coverage and assumes all responsibility for ensuring that such coverage is provided in conformity with the requirements of this Agreement. Contractor agrees that upon request by City, all agreements with, and insurance compliance documents provided by, such subcontractors and others engaged in the project will be submitted to City for review.

2. Contractor agrees to be responsible for ensuring that no contract used by any party involved in any way with the project reserves the right to charge City or Contractor for the cost of additional insurance coverage required by this Agreement. Any such provisions are to be deleted with reference to City. It is not the intent of City to reimburse any third party for the cost of complying with these requirements. There shall be no recourse against City for payment of premiums or other amounts with respect thereto.

3. The City reserves the right to withhold payments from the Contractor in the event of material noncompliance with the insurance requirements set forth in this Agreement.

F. EVIDENCE OF COVERAGE

Prior to commencement of any Services under this Agreement, Contractor, and each and every subcontractor (of every tier) shall, at its sole cost and expense, purchase and maintain not less than the minimum insurance coverage with the endorsements and

deductibles indicated in this Agreement. Such insurance coverage shall be maintained with insurers, and under forms of policies, satisfactory to City and as described in this Agreement. Contractor shall file with the City all certificates and endorsements for the required insurance policies for City's approval as to adequacy of the insurance protection.

G. EVIDENCE OF COMPLIANCE

Contractor or its insurance broker shall provide the required proof of insurance compliance, consisting of Insurance Services Office (ISO) endorsement forms or their equivalent and the ACORD form 25-S certificate of insurance (or its equivalent), evidencing all required coverage shall be delivered to City, or its representative as set forth below, at or prior to execution of this Agreement. Upon City's request, Contractor shall submit to City copies of the actual insurance policies or renewals or replacements. Unless otherwise required by the terms of this Agreement, all certificates, endorsements, coverage verifications and other items required to be delivered to City pursuant to this Agreement shall be mailed to:

EBIX Inc.
City of Santa Clara Electric Department
P.O. 12010-S2 or 151 North Lyon Avenue
Hemet, CA 92546-8010 Hemet, CA 92543

Telephone number: 951-766-2280
Fax number: 770-325-0409
Email address: ctsantaclara@ebix.com

H. QUALIFYING INSURERS

All of the insurance companies providing insurance for Contractor shall have, and provide written proof of, an A. M. Best rating of at least A minus 6 (A- VI) or shall be an insurance company of equal financial stability that is approved by the City or its insurance compliance representatives.

AGREEMENT FOR THE PERFORMANCE OF SERVICES
BY AND BETWEEN THE
CITY OF SANTA CLARA, CALIFORNIA,
AND
VICKI VANDERBURG, INC. DBA POWER SYSTEMS OPERATIONS

EXHIBIT D

ETHICAL STANDARDS FOR CONTRACTORS SEEKING TO ENTER INTO AN AGREEMENT WITH THE CITY OF SANTA CLARA, CALIFORNIA

Termination of Agreement for Certain Acts.

A. The City may, at its sole discretion, terminate this Agreement in the event any one or more of the following occurs:

1. If a Contractor[1] does any of the following:

a. Is convicted[2] of operating a business in violation of any Federal, State or local law or regulation;

b. Is convicted of a crime punishable as a felony involving dishonesty[3];

c. Is convicted of an offense involving dishonesty or is convicted of fraud or a criminal offense in connection with: (1) obtaining; (2) attempting to obtain; or, (3) performing a public contract or subcontract;

d. Is convicted of any offense which indicates a lack of business integrity or business honesty which seriously and directly affects the present responsibility of a City contractor or subcontractor; and/or,

e. Made (or makes) any false statement(s) or representation(s) with respect to this Agreement.

---

[1] For purposes of this Agreement, the word "Consultant" (whether a person or a legal entity) also refers to "Contractor" and means any of the following: an owner or co-owner of a sole proprietorship; a person who controls or who has the power to control a business entity; a general partner of a partnership; a principal in a joint venture; or a primary corporate stockholder [i.e., a person who owns more than ten percent (10%) of the outstanding stock of a corporation] and who is active in the day to day operations of that corporation.

[2] For purposes of this Agreement, the words "convicted" or "conviction" mean a judgment or conviction of a criminal offense by any court of competent jurisdiction, whether entered upon a verdict or a plea, and includes a conviction entered upon a plea of nolo contendere within the past five (5) years.

[3] As used herein, "dishonesty" includes, but is not limited to, embezzlement, theft, forgery, bribery, falsification or destruction of records, making false statements, failure to pay tax obligations, receiving stolen property, collusion or conspiracy.

2. If fraudulent, criminal or other seriously improper conduct of any officer, director, shareholder, partner, employee or other individual associated with the Contractor can be imputed to the Contractor when the conduct occurred in connection with the individual's performance of duties for or on behalf of the Contractor, with the Contractor's knowledge, approval or acquiescence, the Contractor's acceptance of the benefits derived from the conduct shall be evidence of such knowledge, approval or acquiescence.

B. The City may also terminate this Agreement in the event any one or more of the following occurs:

1. The City determines that Contractor no longer has the financial capability[4] or business experience[5] to perform the terms of, or operate under, this Agreement; or,

2. If City determines that the Contractor fails to submit information, or submits false information, which is required to perform or be awarded a contract with City, including, but not limited to, Contractor's failure to maintain a required State issued license, failure to obtain a City business license (if applicable) or failure to purchase and maintain bonds and/or insurance policies required under this Agreement.

C. In the event a prospective Contractor (or bidder) is ruled ineligible (debarred) to participate in a contract award process or a contract is terminated pursuant to these provisions, Contractor may appeal the City's action to the City Council by filing a written request with the City Clerk within ten (10) days of the notice given by City to have the matter heard. The matter will be heard within thirty (30) days of the filing of the appeal request with the City Clerk. The Contractor will have the burden of proof on the appeal. The Contractor shall have the opportunity to present evidence, both oral and documentary, and argument.

---

[4] Contractor becomes insolvent, transfers assets in fraud of creditors, makes an assignment for the benefit of creditors, files a petition under any section or chapter of the federal Bankruptcy Code (11 U.S.C.), as amended, or under any similar law or statute of the United States or any state thereof, is adjudged bankrupt or insolvent in proceedings under such laws, or a receiver or trustee is appointed for all or substantially all of the assets of Contractor.

[5] Loss of personnel deemed essential by the City for the successful performance of the obligations of the Contractor to the City.

AGREEMENT FOR THE PERFORMANCE OF SERVICES
BY AND BETWEEN THE
CITY OF SANTA CLARA, CALIFORNIA,
AND
VICKI VANDERBURG, INC. DBA POWER SYSTEMS OPERATIONS

EXHIBIT E

AFFIDAVIT OF COMPLIANCE WITH ETHICAL STANDARDS

I hereby state that I have read and understand the language, entitled "Ethical Standards" set forth in Exhibit D. I have the authority to make these representations on my own behalf or on behalf of the legal entity identified herein. I have examined appropriate business records, and I have made appropriate inquiry of those individuals potentially included within the definition of "Contractor" contained in Ethical Standards at footnote 1.

Based on my review of the appropriate documents and my good-faith review of the necessary inquiry responses, I hereby state that neither the business entity nor any individual(s) belonging to said "Contractor" category [i.e., owner or co-owner of a sole proprietorship, general partner, person who controls or has power to control a business entity, etc.] has been convicted of any one or more of the crimes identified in the Ethical Standards within the past five (5) years.

The above assertions are true and correct and are made under penalty of perjury under the laws of the State of California.

VICKI VANDERBURG, INC.
DBA POWER SYSTEMS OPERATIONS
a Washington corporation

By: Vicki W Vanderburg
Name: VICKI VANDERBURG
Title: Principal

NOTARY'S ACKNOWLEDGMENT TO BE ATTACHED

Please execute the affidavit and attach a notary public's acknowledgment of execution of the affidavit by the signatory. If the affidavit is on behalf of a corporation, partnership, or other legal entity, the entity's complete legal name and the title of the person signing on behalf of the legal entity shall appear above. Written evidence of the authority of the person executing this affidavit on behalf of a corporation, partnership, joint venture, or any other legal entity, other than a sole proprietorship, shall be attached.

STATE OF WASHINGTON

County of King

I, Verity K. Swearingen, Notary Public in and for the State of Washington, residing at Renton, WA, do hereby certify that on this 22nd day of May, 2014, personally appeared before me Vicki Vanderburg to me known to be the individual(s) described in and who executed the within instrument and acknowledged to me that signed and sealed the said instrument as her free and voluntary act on deed, for the uses and purposes therein mentioned.

Signed and sworn to before me this 22nd day of May, 2014.

Notary Public in and for the State of WA

My appointment expires: 07/03/2016

VERITY K. SWEARINGEN
STATE OF WASHINGTON
NOTARY PUBLIC
MY COMMISSION EXPIRES
07-03-16

AGREEMENT FOR THE PERFORMANCE OF SERVICES
BY AND BETWEEN THE
CITY OF SANTA CLARA, CALIFORNIA,
AND
VICKI VANDERBURG, INC. DBA POWER SYSTEMS OPERATIONS

EXHIBIT F

MILESTONE SCHEDULE

(Not Applicable)

Meeting Date: 7/1/14

AGENDA REPORT

City of Santa Clara, California

Agenda Item # 6B-4

Date: June 17, 2014

To: City Manager for Council Action

From: Director of Electric Utility

Subject: Approval of an Agreement for the Performance of Services with Canus Corporation for Inspection of Silicon Valley Power's 12kV Distribution Equipment

EXECUTIVE SUMMARY:

The City's Electric Utility, Silicon Valley Power (SVP), performs detailed inspections of all overhead and underground high voltage electric facilities as required by California Public Utilities Commission General Order 165 (GO 165). Detailed inspections are required to be performed on a 5-year cycle equating to 20% of our system each year. The current workload generated by new development projects has created a backlog of inspections. The Electric Department anticipates hiring additional staff in FY14-15 but requires contractual support to bridge the gap and complete calendar year 2014 inspections. Canus Corporation provided inspections services for SVP in 2013. An Agreement for the Performance of Services with Canus Corporation will provide the experienced personnel and tools to perform the backlog of inspections and provide the documentation to demonstrate compliance. A copy of the Agreement for Services with Canus Corporation can be viewed on the City's website or is available in the City Clerk's Office for review during normal business hours.

ADVANTAGES AND DISADVANTAGES OF ISSUE:

This Agreement provides a resource that enables SVP to perform the necessary detailed inspections to maintain the functional integrity of the City's 12kV distribution equipment and maintain compliance with state regulatory agencies.

ECONOMIC/FISCAL IMPACT:

The total cost of the Agreement shall not exceed $150,000.00. Sufficient funds are available in Electric Department Capital Project Distribution Capital Maintenance and Betterments, account 591-1376-80300-2006-[A]00015-[F]56700.

RECOMMENDATION:

That Council approve, and authorize the City Manager to execute, an Agreement for the Performance of Services with Canus Corporation, in an amount not to exceed $150,000.00, for inspection of Silicon Valley Power's 12kV Distribution Equipment.

FOR John C. Roukema
Director of Electric Utility

Certified as to Availability of Funds: AK
591-1376-80300-2006 $ 150,000.00

Gary Ameling
Director of Finance/Assistant City Manager

APPROVED:

Julio J. Fuentes
City Manager

MAJORITY VOTE OF COUNCIL

Documents Related to this Report:

1) Agreement for the Performance of Services with Canus Corporation

EBIX Insurance No. S200002830

AGREEMENT FOR THE PERFORMANCE OF SERVICES BY AND BETWEEN THE CITY OF SANTA CLARA, CALIFORNIA, AND CANUS CORPORATION

PREAMBLE

This agreement for the performance of services ("Agreement") is made and entered into on this _____ day of _____, 2014, ("Effective Date") by and between Canus Corporation, a California corporation, with its principal place of business located at P.O. Box 5700, Norco, CA 92860 ("Contractor"), and the City of Santa Clara, California, a chartered California municipal corporation with its primary business address at 1500 Warburton Avenue, Santa Clara, California 95050 ("City"). City and Contractor may be referred to individually as a "Party" or collectively as the "Parties" or the "Parties to this Agreement."

RECITALS

A. City desires to secure professional services more fully described in this Agreement, at Exhibit A, entitled "Scope of Services"; and

B. Contractor represents that it, and its subcontractors, if any, have the professional qualifications, expertise, necessary licenses and desire to provide certain goods and/or required services of the quality and type which meet objectives and requirements of City; and,

C. The Parties have specified herein the terms and conditions under which such services will be provided and paid for.

The Parties agree as follows:

AGREEMENT PROVISIONS

1. EMPLOYMENT OF CONTRACTOR.

City hereby employs Contractor to perform services set forth in this Agreement. To accomplish that end, City may assign a Project Manager to personally direct the Services to be provided by Contractor and will notify Contractor in writing of City's choice. City shall pay for all such materials and services provided which are consistent with the terms of this Agreement.

2. SERVICES TO BE PROVIDED.

Except as specified in this Agreement, Contractor shall furnish all technical and professional services, including labor, material, equipment, transportation, supervision and expertise (collectively referred to as "Services") to satisfactorily complete the work required by City at his/her own risk and expense. Services to be provided to City are

more fully described in Exhibit A entitled "SCOPE OF SERVICES." All of the exhibits referenced in this Agreement are attached and are incorporated by this reference.

3. COMMENCEMENT AND COMPLETION OF SERVICES.

A. Contractor shall begin providing the services under the requirements of this Agreement upon receipt of written Notice to Proceed from City. Such notice shall be deemed to have occurred three (3) calendar days after it has been deposited in the regular United States mail. Contractor shall complete the Services within the time limits set forth in the Scope of Services or as mutually determined in writing by the Parties.

B. When City determines that Contractor has satisfactorily completed the Services, City shall give Contractor written Notice of Final Acceptance. Upon receipt of such notice, Contractor shall not incur any further costs under this Agreement. Contractor may request this determination of completion be made when, in its opinion, the Services have been satisfactorily completed. If so requested by the contractor, City shall make this determination within fourteen (14) days of its receipt of such request.

4. QUALIFICATIONS OF CONTRACTOR - STANDARD OF WORKMANSHIP.

Contractor represents and maintains that it has the necessary expertise in the professional calling necessary to perform services, and its duties and obligations, expressed and implied, contained herein, and City expressly relies upon Contractor's representations regarding its skills and knowledge. Contractor shall perform such services and duties in conformance to and consistent with the professional standards of a specialist in the same discipline in the State of California.

The plans, designs, specifications, estimates, calculations, reports and other documents furnished under Exhibit A shall be of a quality acceptable to City. The criteria for acceptance of the work provided under this Agreement shall be a product of neat appearance, well organized, that is technically and grammatically correct, checked and having the maker and checker identified. The minimum standard of appearance, organization and content of the drawings shall be that used by City for similar projects.

5. TERM OF AGREEMENT.

Unless otherwise set forth in this Agreement or unless this paragraph is subsequently modified by a written amendment to this Agreement, the term of this Agreement shall begin on the Effective Date of this Agreement and terminate at the end of the day one (1) year from the effective date.

6. MONITORING OF SERVICES.

City may monitor the Services performed under this Agreement to determine whether Contractor's operation conforms to City policy and to the terms of this Agreement. City may also monitor the Services to be performed to determine whether financial operations are conducted in accord with applicable City, county, state, and federal requirements. If

any action of Contractor constitutes a breach, City may terminate this Agreement pursuant to the provisions described herein.

7. WARRANTY.

Contractor expressly warrants that all materials and services covered by this Agreement shall be fit for the purpose intended, shall be free from defect, and shall conform to the specifications, requirements, and instructions upon which this Agreement is based. Contractor agrees to promptly replace or correct any incomplete, inaccurate, or defective Services at no further cost to City when defects are due to the negligence, errors or omissions of Contractor. If Contractor fails to promptly correct or replace materials or services, City may make corrections or replace materials or services and charge Contractor for the cost incurred by City.

8. PERFORMANCE OF SERVICES.

Contractor shall perform all requested services in an efficient and expeditious manner and shall work closely with and be guided by City. Contractor shall be as fully responsible to City for the acts and omissions of its subcontractors, and of persons either directly or indirectly employed by them, as Contractor is for the acts and omissions of persons directly employed by it. Contractor will perform all Services in a safe manner and in accordance with all federal, state and local operation and safety regulations.

9. RESPONSIBILITY OF CONTRACTOR.

Contractor shall be responsible for the professional quality, technical accuracy and coordination of the Services furnished by it under this Agreement. Neither City's review, acceptance, nor payments for any of the Services required under this Agreement shall be construed to operate as a waiver of any rights under this Agreement or of any cause of action arising out of the performance of this Agreement and Contractor shall be and remain liable to City in accordance with applicable law for all damages to City caused by Contractor negligent performance of any of the Services furnished under this Agreement.

Any acceptance by City of plans, specifications, construction contract documents, reports, diagrams, maps and other material prepared by Contractor shall not in any respect absolve Contractor form the responsibility Contractor has in accordance with customary standards of good professional practice in compliance with applicable federal, state, county, and/or municipal laws, ordinances, regulations, rules and orders.

10. COMPENSATION AND PAYMENT.

In consideration for Contractor's complete performance of Services, City shall pay Contractor for all materials provided and services rendered by Contractor at the rate per hour for labor and cost per unit for materials as outlined in Exhibit B, entitled "SCHEDULE OF FEES."

Contractor will bill City on a monthly basis for Services provided by Contractor during the preceding month, subject to verification by City. City will pay Contractor within thirty (30) days of City's receipt of invoice.

11. TERMINATION OF AGREEMENT.

Either Party may terminate this Agreement without cause by giving the other Party written notice ("Notice of Termination") which clearly expresses that Party's intent to terminate the Agreement. Notice of Termination shall become effective no less than thirty (30) calendar days after a Party receives such notice. After either Party terminates the Agreement, Contractor shall discontinue further services as of the effective date of termination, and City shall pay Contractor for all Services satisfactorily performed up to such date.

12. NO ASSIGNMENT OR SUBCONTRACTING OF AGREEMENT.

City and Contractor bind themselves, their successors and assigns to all covenants of this Agreement. This Agreement shall not be assigned or transferred without the prior written approval of City. Contractor shall not hire subcontractors without express written permission from City.

13. NO THIRD PARTY BENEFICIARY.

This Agreement shall not be construed to be an agreement for the benefit of any third party or parties and no third party or parties shall have any claim or right of action under this Agreement for any cause whatsoever.

14. INDEPENDENT CONTRACTOR.

Contractor and all person(s) employed by or contracted with Contractor to furnish labor and/or materials under this Agreement are independent contractors and do not act as agent(s) or employee(s) of City. Contractor has full rights, however, to manage its employees in their performance of Services under this Agreement. Contractor is not authorized to bind City to any contracts or other obligations.

15. NO PLEDGING OF CITY'S CREDIT.

Under no circumstances shall Contractor have the authority or power to pledge the credit of City or incur any obligation in the name of City. Contractor shall save and hold harmless the City, its City Council, its officers, employees, boards and commissions for expenses arising out of any unauthorized pledges of City's credit by Contractor under this Agreement.

16. CONFIDENTIALITY OF MATERIAL.

All ideas, memoranda, specifications, plans, manufacturing procedures, data, drawings, descriptions, documents, discussions or other information developed or received by or for Contractor and all other written information submitted to Contractor in connection with the performance of this Agreement shall be held confidential by Contractor and shall not, without the prior written consent of City, be used for any purposes other than the performance of the Services nor be disclosed to an entity not connected with performance of the Services. Nothing furnished to Contractor which is otherwise known to Contractor or becomes generally known to the related industry shall be deemed confidential.

17. USE OF CITY NAME OR EMBLEM.

Contractor shall not use City's name, insignia, or emblem, or distribute any information related to services under this Agreement in any magazine, trade paper, newspaper or other medium without express written consent of City.

18. OWNERSHIP OF MATERIAL.

All material, including information developed on computer(s), which shall include, but not be limited to, data, sketches, tracings, drawings, plans, diagrams, quantities, estimates, specifications, proposals, tests, maps, calculations, photographs, reports and other material developed, collected, prepared or caused to be prepared under this Agreement shall be the property of City but Contractor may retain and use copies thereof. City shall not be limited in any way or at any time in its use of said material. However, Contractor shall not be responsible for damages resulting from the use of said material for work other than Project, including, but not limited to, the release of this material to third parties.

19. RIGHT OF CITY TO INSPECT RECORDS OF CONTRACTOR.

City, through its authorized employees, representatives or agents shall have the right during the term of this Agreement and for three (3) years from the date of final payment for goods or services provided under this Agreement, to audit the books and records of Contractor for the purpose of verifying any and all charges made by Contractor in connection with Contractor compensation under this Agreement, including termination of Contractor. Contractor agrees to maintain sufficient books and records in accordance with generally accepted accounting principles to establish the correctness of all charges submitted to City. Any expenses not so recorded shall be disallowed by City.

Contractor shall submit to City any and all reports concerning its performance under this Agreement that may be requested by City in writing. Contractor agrees to assist City in meeting City's reporting requirements to the State and other agencies with respect to Contractor's Services hereunder.

20. CORRECTION OF SERVICES.

Contractor agrees to correct any incomplete, inaccurate or defective Services at no further costs to City, when such defects are due to the negligence, errors or omissions of Contractor.

21. FAIR EMPLOYMENT.

Contractor shall not discriminate against any employee or applicant for employment because of race, color, creed, national origin, gender, sexual orientation, age, disability, religion, ethnic background, or marital status, in violation of state or federal law.

22. HOLD HARMLESS/INDEMNIFICATION.

To the extent permitted by law, Contractor agrees to protect, defend, hold harmless and indemnify City, its City Council, commissions, officers, employees, volunteers and agents from and against any claim, injury, liability, loss, cost, and/or expense or damage, including all costs and reasonable attorney's fees in providing a defense to any claim arising therefrom, for which City shall become liable arising from Contractor's negligent, reckless or wrongful acts, errors, or omissions with respect to or in any way connected with the Services performed by Contractor pursuant to this Agreement.

23. INSURANCE REQUIREMENTS.

During the term of this Agreement, and for any time period set forth in Exhibit C, Contractor shall purchase and maintain in full force and effect, at no cost to City insurance policies with respect to employees and vehicles assigned to the Performance of Services under this Agreement with coverage amounts, required endorsements, certificates of insurance, and coverage verifications as defined in Exhibit C.

24. AMENDMENTS.

This Agreement may be amended only with the written consent of both Parties.

25. INTEGRATED DOCUMENT.

This Agreement represents the entire agreement between City and Contractor. No other understanding, agreements, conversations, or otherwise, with any representative of City prior to execution of this Agreement shall affect or modify any of the terms or obligations of this Agreement. Any verbal agreement shall be considered unofficial information and is not binding upon City.

26. SEVERABILITY CLAUSE.

In case any one or more of the provisions in this Agreement shall, for any reason, be held invalid, illegal or unenforceable in any respect, it shall not affect the validity of the other provisions, which shall remain in full force and effect.

27. WAIVER.

Contractor agrees that waiver by City of any one or more of the conditions of performance under this Agreement shall not be construed as waiver(s) of any other condition of performance under this Agreement.

28. NOTICES.

All notices to the Parties shall, unless otherwise requested in writing, be sent to City addressed as follows:

City of Santa Clara
Attention: Electric Department
1500 Warburton Avenue
Santa Clara, California 95050
or by facsimile at (408) 261-2717

And to Contractor addressed as follows:
Canus Corporation
27 Spectrum Pointe #302
Lake Forest, CA 92630
or by facsimile at (909) 494-7766

If notice is sent via facsimile, a signed, hard copy of the material shall also be mailed. The workday the facsimile was sent shall control the date notice was deemed given if there is a facsimile machine generated document on the date of transmission. A facsimile transmitted after 1:00 p.m. on a Friday shall be deemed to have been transmitted on the following Monday.

29. CAPTIONS.

The captions of the various sections, paragraphs and subparagraphs of this Agreement are for convenience only and shall not be considered or referred to in resolving questions of interpretation.

30. LAW GOVERNING CONTRACT AND VENUE.

This Agreement shall be governed and construed in accordance with the statutes and laws of the State of California. The venue of any suit filed by either Party shall be vested in the state courts of the County of Santa Clara, or if appropriate, in the United States District Court, Northern District of California, San Jose, California.

31. DISPUTE RESOLUTION.

A. Unless otherwise mutually agreed to by the Parties, any controversies between Contractor and City regarding the construction or application of this Agreement, and claims arising out of this Agreement or its breach, shall be submitted to mediation within thirty (30) days of the written request of one Party after the service of that request on the other Party.

B. The Parties may agree on one mediator. If they cannot agree on one mediator, the Party demanding mediation shall request the Superior Court of Santa Clara County to appoint a mediator. The mediation meeting shall not exceed one day

(eight (8) hours). The Parties may agree to extend the time allowed for mediation under this Agreement.

C. The costs of mediation shall be borne by the Parties equally.

D. For any contract dispute, mediation under this section is a condition precedent to filing an action in any court. In the event of mediation which arises out of any dispute related to this Agreement, the Parties shall each pay their respective attorney's fees, expert witness costs and cost of suit through mediation only. In the event of litigation, the prevailing Party shall recover its reasonable costs of suit, expert's fees, and attorney's fees. If mediation does not resolve the dispute, the Parties agree that the matter shall be litigated in a court of law, and not subject to the arbitration provisions of the Public Contracts Code.

32. COMPLIANCE WITH ETHICAL STANDARDS.

Contractor shall:

A. Read Exhibit D, entitled "ETHICAL STANDARDS FOR CONTRACTORS SEEKING TO ENTER INTO AN AGREEMENT WITH THE CITY OF SANTA CLARA, CALIFORNIA"; and,

B. Execute Exhibit E, entitled "AFFIDAVIT OF COMPLIANCE WITH ETHICAL STANDARDS."

33. CONFLICT OF INTERESTS.

This Agreement does not prevent either Party from entering into similar agreements with other parties. To prevent a conflict of interest, Contractor certifies that to the best of its knowledge, no City officer, employee or authorized representative has any financial interest in the business of Contractor and that no person associated with Contractor has any interest, direct or indirect, which could conflict with the faithful performance of this Agreement. Contractor is familiar with the provisions of California Government Code Section 87100 and following, and certifies that it does not know of any facts which would violate these code provisions. Contractor will advise City if a conflict arises.

34. PROGRESS SCHEDULE.

The Progress Schedule will be as set forth in the attached Exhibit F, entitled "MILESTONE SCHEDULE" if applicable.

///

///

///

This Agreement may be executed in counterparts, each of which shall be deemed to be an original, but both of which shall constitute one and the same instrument; and, the Parties agree that signatures on this Agreement, including those transmitted by facsimile, shall be sufficient to bind the Parties.

The Parties acknowledge and accept the terms and conditions of this Agreement as evidenced by the following signatures of their duly authorized representatives. It is the intent of the Parties that this Agreement shall become operative on the Effective Date.

CITY OF SANTA CLARA, CALIFORNIA
a chartered California municipal corporation

APPROVED AS TO FORM:

RICHARD E. NOSKY, JR.
City Attorney

ATTEST:

ROD DIRIDON, JR.
City Clerk

JULIO J. FUENTES
City Manager
1500 Warburton Avenue
Santa Clara, CA 95050
Telephone: (408) 615-2210
Fax: (408) 241-6771

"CITY"

CANUS CORPORATION
a California corporation

By: _____
GREG RICKS
Title: Vice President
Address: P.O. Box 5700
Norco, CA 92860
Telephone: (951) 520-4299
Fax: (909) 494-7766

"CONTRACTOR"

AGREEMENT FOR THE PERFORMANCE OF SERVICES BY AND BETWEEN THE CITY OF SANTA CLARA, CALIFORNIA, AND CANUS CORPORATION

EXHIBIT A

SCOPE OF SERVICES

The Services to be performed for the City by the Contractor under this Agreement are more fully described in the Contractor's proposal entitled, "Compliance Inspection and Substation Testing" which is attached to this Exhibit A.

Silicon Valley Power Proposal

Compliance Inspection and Substation Testing

Proposal Summary

CANUS is pleased to offer a proposal to provide Electrical Line Inspection and Electrical Relay Testing services for Silicon Valley Power.

CANUS Corporation is a General Engineering Contactor 'A' and Electrical Specialty Contractor 'C-10'.

Please find attached our rate sheet as well as our general proposal information.

Thank you for the opportunity to submit this proposal.

Regards,

Greg Ricks
Vice President

Corporate Office • PO Box 5700 • Norco, CA 92860 • Office (951) 520-4299
Overnight Mail – Operations Office • 27 Spectrum Pointe Dr. #302 • Lake Forest, CA 92860 • Office (949) 855-8852 • Fax (909) 494-766

Contents

Silicon Valley Power Proposal 0
Compliance Inspection and Substation Testing 0
Proposal Summary 0
Contents 2
Contact Sheet 3
CANUS Profile 4
Company Overview 4
Company Commitment to Safety 5
Current CANUS Services 5
Electrical Testing 5
Acceptance Testing 5
Maintenance Testing 6
Construction and Maintenance Inspection 6
Project Oversight and Administration 6
Construction 7
Substation Construction 7
Line Construction 7
Gas Maintenance 7
Telecom 8
References 8
Proposed Innovations 9
Cost Sheet 9

Contact Sheet

Primary Contact
Name: Ray Hernandez
Title: Electrical Inspection Program Manager
Cell: 408.482.8239
Email: ray@canus.co

Backup Contact
Name: Greg Ricks
Title: Vice President
Office: 949.855.8852
Cell: 949.829.2686
Email: gricks@canus.co

CANUS Profile

Company Overview

CANUS Corporation, a California licensed General Engineering and Electrical Contractor, is a source of specialized engineering and technical contracting, providing solutions to utilities and industrial clients. The company provides a wide-range of services within construction, maintenance, operations, electrical testing, and field services.

CANUS Corporation is headquartered in Lake Forest, California with field presence nationwide. CANUS Corporation is operational nationwide with projects across the country.

With more than 525 full time engineering and technical professionals, a resource base of several thousand and an affiliation with the International Brotherhood of Electrical Workers CANUS Corporation has the manpower, resources and expertise to complete projects that are local, regional, or national in scope.

CANUS Corporation, since its beginning in 1985, has focused on the development of a business model by building upon our management team's hands-on professional and technical experience, our experience in human resources, and our understanding of worker dynamics. Our model provides a distinctive grouping of professional and technical resources allowing our clients to perform construction and maintenance activities with either:

- An integration of the client/CANUS Corporation workforce,
- Discrete groupings of crews within the clients workforce, and/or
- The outsourcing of work to CANUS Corporation.

Company Commitment to Safety

Employees of CANUS Corporation know that safety is a primary concern during all project activities. Workplace and worker safety is important not only because we value the welfare of our employees, but also because the success of our projects – and our business – depends on it.
We realize that to achieve zero accidents, every employee must be committed to knowing and using safe working practices. This commitment also includes maintenance of a drug-free workplace and worker support for our no-drugs policy.
Safety is efficient, practical, and effective. It's the right way to do business.

Current CANUS Services

Electrical Testing

CANUS Corporation provides experienced personnel to support our Clients Substation Testing, and Maintenance needs. The following is a list of some of the services provided by CANUS Corporation personnel.

Acceptance Testing

Acceptance testing is one of the primary factors in prolonging the life of your electrical equipment. We will perform and document all required and requested tests on the following equipment in your substation and/or Power generation facility:

- Protective Relays Calibration/Testing
- Low and High Voltage Circuit Breakers
- High Potential Testing
- Power Factor Testing
- Switchgear Testing
- Rotating Equipment
- SCADA Integration
- CTs, PTs and CCVTs
- Transformers
- Substation Automation

Maintenance Testing

CANUS Corporation offers ongoing testing services that can actually extend the life of your system. Based on Baseline values gathered during Acceptance Testing, we can develop a program of preventive maintenance that is superior to other conventional services

- Ground Fault Systems Testing
- Standby Generation System Testing
- Low and Medium-Voltage circuit breakers
- Switchgear
- Substation Equipment Testing

Construction and Maintenance Inspection

CANUS Corporation provides experienced personnel to support our Clients' Substation Construction and Maintenance as well as our Clients' Transmission and Distribution needs. The following is a list of some of the services provided by CANUS Corporation personnel.

- Transmission and Distribution Construction and Maintenance Inspection
- Compliance Work (G.O. 95 & all relevant standards)
- Smart Meter Electric System Inspection
- Substation Construction and Maintenance Inspection
- Gas Construction Inspection
- Civil Construction Inspection (including T-Line Towers)
- Welding Inspection

Project Oversight and Administration

CANUS provides Project Management that successfully manages resources, organizes, and plans projects of any scope to be done on or before schedule and within the projects budget. CANUS also provide personnel and services to support projects administrative needs including Field Clerks.

Construction

Substation Construction

CANUS is capable of performing your substation construction for both new substation installations and substation upgrade projects. Work can be performed on a cost-Plus or a complete turnkey lump sum basis.

- Protective Relays Installation
- Low and High Voltage Circuit Breakers
- Bus Support Structures
- Underground Cable Systems
- Ground Grid Installations
- SCADA Equipment
- Disconnects
- Transformers
- Control Systems and Structures
- Panel Wiring from Schematics
- Breaker Installations

Line Construction

CANUS Corporation now offers Line Construction Services.

- Underground System Design and installation
- Line Support System Installation and Replacement
- T&D System Maintenance

Gas Maintenance

CANUS Corporation provides experienced personnel to support our Client's Gas Transmission and Distribution systems and its needs. The following is a list of some of the services provided by CANUS Corporation personnel.

- Gas Line Construction Inspection
- Hydrostatic Testing Inspection
- Welding Inspection
- Leak Repair Inspection
- Valve Repair/Change outs
- Leak Pin Pointing
- Riser repair etc.

Telecom

CANUS Corporation provides experienced personnel to support our Clients Telecommunication needs. The following is a list of some of the services provided by CANUS Corporation personnel.

- Installation
- Inspection
- Integration

References

Transmission Inspection
Contact: Paul Hills pdh6@pge.com

Distribution Inspection
Contact: Chris Baker ceb4@pge.com

Compliance Inspection
Contact: Heather Duncan HJG4@pge.com

Proposed Innovations

CANUS proposes to include in our deliverables an online portal to view our Inspectors daily log to appropriate parties within Silicon Valley Power as needed. This will give greater visibility to the status of the project and the findings. This information will be viewable in real time once the inspector has made an entry. The online inspection log shall include:

- Summary of Activities
- On Site Personnel
- On Site Equipment
- Conversations and Correspondences
- Miscellaneous
- And an attachment field for uploading any relevant documentation from the day or photos

Cost Sheet

CLASSIFICATION	STRAIGHT TIME	PREMIUM TIME
Construction Coordinator and Inspector – Class I (Lead)	$98.50	$145.26
Construction Coordinator and Inspector - Class II (Journeyman)	$91.42	$132.43
Senior Test Specialist	$109.21	$163.94
Test Specialist	$101.42	$149.86
Senior Test Technician	$97.61	$142.97
Test Technician	$91.05	$131.09

REGULAR WORK HOURS:
FOUR 10-HOUR DAYS: The Employer, with 24-hour prior notice to the Union, may institute a workweek consisting of four consecutive 10-hour days between the hours of 7 a.m. and 6 p.m., Monday through Thursday (or Tuesday through Friday), with one-half hour allowed for a lunch period. Friday/ (Monday) may be used as a make-up day, and if utilized, a minimum of eight hours must be scheduled. After 10 hours in a workday, or 40 hours in a workweek, overtime shall be paid at a rate of 2 times the regular rate of pay.
Eight hours work between the hours of 7:00 a.m. and 4:30 p.m., with 30 minutes for a lunch period between fourth and fifth hour shall constitute the workday. Five such days, Monday through Friday, shall constitute the workweek. The normal workday may be varied by no more than two hours by mutual agreement between the Union and the Employer.
NINE/Eighty Work Schedule: The employer, with 24-hour prior notice to the Union, may institute a 9/80-work schedule; the workweek may begin on any day and at any hour. The 9/80 pay period generally consists of eight 9-hour days, one 8-hour day, and one day off (i.e., nine workdays with a total of 80 hours in a two week period). The day opposite the day off must be split into either a 4-hour/5-hour, 4-hour/4-hour, or 5-hour/4-hour split. Part of the split day's hours would go into the previous week, and the remainder into the current workweek.
HOLIDAYS AND OVERTIME:
All work performed outside of the regular scheduled working hours and on Saturdays, Sundays, and the following holidays: New Year's Day, Martin Luther King Day (California only), Presidents Day (Nevada only), Memorial Day, Fourth of July, Labor Day,

Veteran's Day (California only), Nevada Day (Nevada only), Thanksgiving Day and the Friday following, and Christmas Day, or days celebrated as such, shall be paid for at double the regular straight-time rate of pay.

MOBILIZATION/DEMOBILIZATION/TRAVEL:

All work is mobilized/demobilized from/to Vacaville, CA or the employee's permanent residence, whichever is closer, travel time is paid at the straight time rate. Mileage will be reimbursed at the current IRS guideline. Travel portal to portal on normal days will be invoiced at the straight time rate. Travel portal to portal after regular work hours, Saturday, Sunday, Holidays will be invoiced at premium time rates. Applicable local union requirements, special fees, dues, zone pay are in addition to the above listed rates.

MILEAGE-LODGING-SUSISTANCE/LIVING ALLOWANCE

Subsistence/Living Allowance will be invoiced at a rate of $700.00 per 40 hour work week. The rate will be prorated across the hours worked per week with the total invoiced rate not to exceed $700 per week.

TOOLS/EQUIPMENT RATES

CLASSIFICATION	Weekly Rate
Phone	*$20*
Computer	*$35*
Air Card	*$20*
Vehicle	*$450*
Other Equipment Mark Up	15%

AGREEMENT FOR THE PERFORMANCE OF SERVICES BY AND BETWEEN THE CITY OF SANTA CLARA, CALIFORNIA, AND CANUS CORPORATION

EXHIBIT B

FEE SCHEDULE

In no event shall the amount billed to City by Contractor for services under this Agreement exceed one hundred fifty thousand dollars ($150,000.00), subject to budget appropriations.

AGREEMENT FOR THE PERFORMANCE OF SERVICES BY AND BETWEEN THE CITY OF SANTA CLARA, CALIFORNIA, AND CANUS CORPORATION

EXHIBIT C

INSURANCE REQUIREMENTS

Without limiting the Contractor's indemnification of the City, and prior to commencing any of the Services required under this Agreement, the Contractor shall purchase and maintain in full force and effect, at its sole cost and expense, the following insurance policies with at least the indicated coverages, provisions and endorsements:

A. COMMERCIAL GENERAL LIABILITY INSURANCE

1. Commercial General Liability Insurance policy which provides coverage at least as broad as Insurance Services Office form CG 00 01. Policy limits are subject to review, but shall in no event be less than, the following:

   $1,000,000 Each Occurrence
   $2,000,000 General Aggregate
   $2,000,000 Products/Completed Operations Aggregate
   $1,000,000 Personal Injury

2. Exact structure and layering of the coverage shall be left to the discretion of Contractor; however, any excess or umbrella policies used to meet the required limits shall be at least as broad as the underlying coverage and shall otherwise follow form.

3. The following provisions shall apply to the Commercial Liability policy as well as any umbrella policy maintained by the Contractor to comply with the insurance requirements of this Agreement:

   a. Coverage shall be on a "pay on behalf" basis with defense costs payable in addition to policy limits;

   b. There shall be no cross liability exclusion which precludes coverage for claims or suits by one insured against another; and

   c. Coverage shall apply separately to each insured against whom a claim is made or a suit is brought, except with respect to the limits of liability.

B. BUSINESS AUTOMOBILE LIABILITY INSURANCE

Business automobile liability insurance policy which provides coverage at least as broad as ISO form CA 00 01 with policy limits a minimum limit of not less than one million dollars ($1,000,000) each accident using, or providing coverage at least as broad as, Insurance Services Office form CA 00 01. Liability coverage shall apply to all owned, non-owned and hired autos.

In the event that the Work being performed under this Agreement involves transporting of hazardous or regulated substances, hazardous or regulated wastes and/or hazardous or regulated materials, Contractor and/or its subcontractors involved in such activities shall provide coverage with a limit of two million dollars ($2,000,000) per accident covering transportation of such materials by the addition to the Business Auto Coverage Policy of Environmental Impairment Endorsement MCS90 or Insurance Services Office endorsement form CA 99 48, which amends the pollution exclusion in the standard Business Automobile Policy to cover pollutants that are in or upon, being transported or towed by, being loaded onto, or being unloaded from a covered auto.

C. WORKERS' COMPENSATION

1. Workers' Compensation Insurance Policy as required by statute and employer's liability with limits of at least one million dollars ($1,000,000) policy limit Bodily Injury by disease, one million dollars ($1,000,000) each accident/Bodily Injury and one million dollars ($1,000,000) each employee Bodily Injury by disease.

2. The indemnification and hold harmless obligations of Contractor included in this Agreement shall not be limited in any way by any limitation on the amount or type of damage, compensation or benefit payable by or for Contractor or any subcontractor under any Workers' Compensation Act(s), Disability Benefits Act(s) or other employee benefits act(s).

3. This policy must include a Waiver of Subrogation in favor of the City of Santa Clara, its City Council, commissions, officers, employees, volunteers and agents.

D. COMPLIANCE WITH REQUIREMENTS

All of the following clauses and/or endorsements, or similar provisions, must be part of each commercial general liability policy, and each umbrella or excess policy.

1. Additional Insureds. City of Santa Clara, its City Council, commissions, officers, employees, volunteers and agents are hereby added as additional insureds in respect to liability arising out of Contractor's work for City, using Insurance Services Office (ISO) Endorsement CG 20 10 11 85 or the combination of CG 20 10 03 97 and CG 20 37 10 01, or its equivalent.

2. Primary and non-contributing. Each insurance policy provided by Contractor shall contain language or be endorsed to contain wording making it primary insurance as respects to, and not requiring contribution from, any other insurance which the

Indemnities may possess, including any self-insurance or self-insured retention they may have. Any other insurance Indemnities may possess shall be considered excess insurance only and shall not be called upon to contribute with Contractor's insurance.

3. Cancellation.

   a. Each insurance policy shall contain language or be endorsed to reflect that no cancellation or modification of the coverage provided due to non-payment of premiums shall be effective until written notice has been given to City at least ten (10) days prior to the effective date of such modification or cancellation. In the event of non-renewal, written notice shall be given at least ten (10) days prior to the effective date of non-renewal.

   b. Each insurance policy shall contain language or be endorsed to reflect that no cancellation or modification of the coverage provided for any cause save and except non-payment of premiums shall be effective until written notice has been given to City at least thirty (30) days prior to the effective date of such modification or cancellation. In the event of non-renewal, written notice shall be given at least thirty (30) days prior to the effective date of non-renewal.

4. Other Endorsements. Other endorsements may be required for policies other than the commercial general liability policy if specified in the description of required insurance set forth in Sections A through D of this Exhibit C, above.

E. ADDITIONAL INSURANCE RELATED PROVISIONS

Contractor and City agree as follows:

1. Contractor agrees to ensure that subcontractors, and any other party involved with the Services who is brought onto or involved in the performance of the Services by Contractor, provide the same minimum insurance coverage required of Contractor, except as with respect to limits. Contractor agrees to monitor and review all such coverage and assumes all responsibility for ensuring that such coverage is provided in conformity with the requirements of this Agreement. Contractor agrees that upon request by City, all agreements with, and insurance compliance documents provided by, such subcontractors and others engaged in the project will be submitted to City for review.

2. Contractor agrees to be responsible for ensuring that no contract used by any party involved in any way with the project reserves the right to charge City or Contractor for the cost of additional insurance coverage required by this Agreement. Any such provisions are to be deleted with reference to City. It is not the intent of City to reimburse any third party for the cost of complying with these requirements. There shall be no recourse against City for payment of premiums or other amounts with respect thereto.

3. The City reserves the right to withhold payments from the Contractor in the event of material noncompliance with the insurance requirements set forth in this Agreement.

F. EVIDENCE OF COVERAGE

Prior to commencement of any Services under this Agreement, Contractor, and each and every subcontractor (of every tier) shall, at its sole cost and expense, purchase and maintain not less than the minimum insurance coverage with the endorsements and deductibles indicated in this Agreement. Such insurance coverage shall be maintained with insurers, and under forms of policies, satisfactory to City and as described in this Agreement. Contractor shall file with the City all certificates and endorsements for the required insurance policies for City's approval as to adequacy of the insurance protection.

G. EVIDENCE OF COMPLIANCE

Contractor or its insurance broker shall provide the required proof of insurance compliance, consisting of Insurance Services Office (ISO) endorsement forms or their equivalent and the ACORD form 25-S certificate of insurance (or its equivalent), evidencing all required coverage shall be delivered to City, or its representative as set forth below, at or prior to execution of this Agreement. Upon City's request, Contractor shall submit to City copies of the actual insurance policies or renewals or replacements. Unless otherwise required by the terms of this Agreement, all certificates, endorsements, coverage verifications and other items required to be delivered to City pursuant to this Agreement shall be mailed to:

EBIX Inc.
City of Santa Clara Electric Department
P.O. 12010-S2 or 151 North Lyon Avenue
Hemet, CA 92546-8010 Hemet, CA 92543

Telephone number: 951-766-2280
Fax number: 770-325-0409
Email address: ctsantaclara@ebix.com

H. QUALIFYING INSURERS

All of the insurance companies providing insurance for Contractor shall have, and provide written proof of, an A. M. Best rating of at least A minus 6 (A- VI) or shall be an insurance company of equal financial stability that is approved by the City or its insurance compliance representatives..

AGREEMENT FOR THE PERFORMANCE OF SERVICES BY AND BETWEEN THE CITY OF SANTA CLARA, CALIFORNIA, AND CANUS CORPORATION

EXHIBIT D

ETHICAL STANDARDS FOR CONTRACTORS SEEKING TO ENTER INTO AN AGREEMENT WITH THE CITY OF SANTA CLARA, CALIFORNIA

Termination of Agreement for Certain Acts.

A. The City may, at its sole discretion, terminate this Agreement in the event any one or more of the following occurs:

1. If a Contractor[1] does any of the following:

   a. Is convicted[2] of operating a business in violation of any Federal, State or local law or regulation;

   b. Is convicted of a crime punishable as a felony involving dishonesty[3];

   c. Is convicted of an offense involving dishonesty or is convicted of fraud or a criminal offense in connection with: (1) obtaining; (2) attempting to obtain; or, (3) performing a public contract or subcontract;

   d. Is convicted of any offense which indicates a lack of business integrity or business honesty which seriously and directly affects the present responsibility of a City contractor or subcontractor; and/or,

   e. Made (or makes) any false statement(s) or representation(s) with respect to this Agreement.

---

[1] For purposes of this Agreement, the word "Consultant" (whether a person or a legal entity) also refers to "Contractor" and means any of the following: an owner or co-owner of a sole proprietorship; a person who controls or who has the power to control a business entity; a general partner of a partnership; a principal in a joint venture; or a primary corporate stockholder [i.e., a person who owns more than ten percent (10%) of the outstanding stock of a corporation] and who is active in the day to day operations of that corporation.

[2] For purposes of this Agreement, the words "convicted" or "conviction" mean a judgment or conviction of a criminal offense by any court of competent jurisdiction, whether entered upon a verdict or a plea, and includes a conviction entered upon a plea of nolo contendere within the past five (5) years.

[3] As used herein, "dishonesty" includes, but is not limited to, embezzlement, theft, forgery, bribery, falsification or destruction of records, making false statements, failure to pay tax obligations, receiving stolen property, collusion or conspiracy.

2. If fraudulent, criminal or other seriously improper conduct of any officer, director, shareholder, partner, employee or other individual associated with the Contractor can be imputed to the Contractor when the conduct occurred in connection with the individual's performance of duties for or on behalf of the Contractor, with the Contractor's knowledge, approval or acquiescence, the Contractor's acceptance of the benefits derived from the conduct shall be evidence of such knowledge, approval or acquiescence.

B. The City may also terminate this Agreement in the event any one or more of the following occurs:

1. The City determines that Contractor no longer has the financial capability[4] or business experience[5] to perform the terms of, or operate under, this Agreement; or,

2. If City determines that the Contractor fails to submit information, or submits false information, which is required to perform or be awarded a contract with City, including, but not limited to, Contractor's failure to maintain a required State issued license, failure to obtain a City business license (if applicable) or failure to purchase and maintain bonds and/or insurance policies required under this Agreement.

C. In the event a prospective Contractor (or bidder) is ruled ineligible (debarred) to participate in a contract award process or a contract is terminated pursuant to these provisions, Contractor may appeal the City's action to the City Council by filing a written request with the City Clerk within ten (10) days of the notice given by City to have the matter heard. The matter will be heard within thirty (30) days of the filing of the appeal request with the City Clerk. The Contractor will have the burden of proof on the appeal. The Contractor shall have the opportunity to present evidence, both oral and documentary, and argument.

---

[4] Contractor becomes insolvent, transfers assets in fraud of creditors, makes an assignment for the benefit of creditors, files a petition under any section or chapter of the federal Bankruptcy Code (11 U.S.C.), as amended, or under any similar law or statute of the United States or any state thereof, is adjudged bankrupt or insolvent in proceedings under such laws, or a receiver or trustee is appointed for all or substantially all of the assets of Contractor.

[5] Loss of personnel deemed essential by the City for the successful performance of the obligations of the Contractor to the City.

AGREEMENT FOR THE PERFORMANCE OF SERVICES BY AND BETWEEN THE CITY OF SANTA CLARA, CALIFORNIA, AND CANUS CORPORATION

EXHIBIT E

AFFIDAVIT OF COMPLIANCE WITH ETHICAL STANDARDS

I hereby state that I have read and understand the language, entitled "Ethical Standards" set forth in Exhibit D. I have the authority to make these representations on my own behalf or on behalf of the legal entity identified herein. I have examined appropriate business records, and I have made appropriate inquiry of those individuals potentially included within the definition of "Contractor" contained in Ethical Standards at footnote 1.

Based on my review of the appropriate documents and my good-faith review of the necessary inquiry responses, I hereby state that neither the business entity nor any individual(s) belonging to said "Contractor" category [i.e., owner or co-owner of a sole proprietorship, general partner, person who controls or has power to control a business entity, etc.] has been convicted of any one or more of the crimes identified in the Ethical Standards within the past five (5) years.

The above assertions are true and correct and are made under penalty of perjury under the laws of the State of California.

CANUS CORPORATION
a California corporation

By: _____
Name: GREG RICKS
Title: Vice President

NOTARY'S ACKNOWLEDGMENT TO BE ATTACHED

Please execute the affidavit and attach a notary public's acknowledgment of execution of the affidavit by the signatory. If the affidavit is on behalf of a corporation, partnership, or other legal entity, the entity's complete legal name and the title of the person signing on behalf of the legal entity shall appear above. Written evidence of the authority of the person executing this affidavit on behalf of a corporation, partnership, joint venture, or any other legal entity, other than a sole proprietorship, shall be attached.

AGREEMENT FOR THE PERFORMANCE OF SERVICES BY AND BETWEEN THE CITY OF SANTA CLARA, CALIFORNIA, AND CANUS CORPORATION

EXHIBIT F

MILESTONE SCHEDULE

(Not Applicable)

CALIFORNIA ALL-PURPOSE ACKNOWLEDGMENT

State of California
County of Orange

On 3.6.2014 (Date) before me, Tejal Munsif, Notary Public (Here Insert Name and Title of the Officer)

personally appeared Gregory Ricks (Name(s) of Signer(s))

who proved to me on the basis of satisfactory evidence to be the person(s) whose name(s) is/are subscribed to the within instrument and acknowledged to me that he/she/they executed the same in his/her/their authorized capacity(ies), and that by his/her/their signature(s) on the instrument the person(s), or the entity upon behalf of which the person(s) acted, executed the instrument.

TEJAL MUNSIF
COMM. #1993182
Notary Public-California
ORANGE COUNTY
My Comm. Exp. OCT. 17, 2016

I certify under PENALTY OF PERJURY under the laws of the State of California that the foregoing paragraph is true and correct.

WITNESS my hand and official seal.

Signature _____ (Signature of Notary Public)

Place Notary Seal Above

OPTIONAL

Though the information below is not required by law, it may prove valuable to persons relying on the document and could prevent fraudulent removal and reattachment of this form to another document.

Description of Attached Document

Title or Type of Document: Agreement

Document Date: 3.6.2014 Number of Pages: _____

Signer(s) Other Than Named Above: _____

Capacity(ies) Claimed by Signer(s)

Signer's Name: _____
☐ Individual
☑ Corporate Officer — Title(s): V. P.
☐ Partner — ☐ Limited ☐ General
☐ Attorney in Fact
☐ Trustee
☐ Guardian or Conservator
☐ Other: _____
Signer Is Representing: _____

RIGHT THUMBPRINT OF SIGNER
Top of thumb here

Signer's Name: _____
☐ Individual
☐ Corporate Officer — Title(s): _____
☐ Partner — ☐ Limited ☐ General
☐ Attorney in Fact
☐ Trustee
☐ Guardian or Conservator
☐ Other: _____
Signer Is Representing: _____

RIGHT THUMBPRINT OF SIGNER
Top of thumb here

© 2007 National Notary Association • 9350 De Soto Ave., P.O. Box 2402 • Chatsworth, CA 91313-2402 • www.NationalNotary.org Item #5907 Reorder: Call Toll-Free 1-800-876-6827

Meeting Date: 7/1/14

AGENDA REPORT

City of Santa Clara, California

Agenda Item # 6B-5

Date: June 17, 2014

To: City Manager for Council Action

From: Director of Electric Utility

Subject: Approval of an Agreement for the Performance of Services with Vicki Vanderburg, Inc., dba Power Systems Operations, for VERA Software Maintenance Support for the Electric Department's Power Trading Division

EXECUTIVE SUMMARY:

The City of Santa Clara's Electric Department, Silicon Valley Power currently uses VERA validation software for its Power Trading Division, which will require software maintenance and patches on a continual basis over the next five years. VERA was designed and written by Vicki Vanderburg, Inc. dba Power Systems Operations (PSO) for the sole purpose of validating the California Independent System Operator (CAISO) Settlements scheduled through SVP's Scheduling Coordinator Agreement with Northern California Power Agency (NCPA). Staff proposes to enter into an Agreement for the Performance of Services with PSO to provide this software maintenance support. A copy of the Agreement for the Performance of Services can be viewed on the City's website or is available in the City Clerk's Office for review during normal business hours.

ADVANTAGES AND DISADVANTAGES OF ISSUE:

SVP requires VERA settlement software to conduct its trading business. By entering into this Agreement with Vicki Vanderburg, Inc., dba Power Systems Operations, SVP will receive all patches and upgrades at no additional cost.

ECONOMIC/FISCAL IMPACT:

The annual cost for this Agreement will not exceed $50,000.00, for a total not-to-exceed amount of $250,000.00 over the five year period. Sufficient funds are available in the Electric Department Contractual Services/Not Classified account, 091-1358-87870-[F]92300.

RECOMMENDATION:

That Council approve, and authorize the City Manager to execute, the Agreement for the Performance of Services with Vicki Vanderburg, Inc., dba Power Systems Operations, in an amount not to exceed $50,000.00 per year, for a total amount of $250,000.00, for VERA software maintenance support for the Electric Department's Power Trading Division.

FOR John C. Roukema
Director of Electric Utility

Certified as to Availability of Funds:
091-1358-87870 $50,000.00

Gary Ameling
Director of Finance/Assistant City Manager

APPROVED:

Julio J. Fuentes
City Manager

MAJORITY VOTE OF COUNCIL

Documents Related to this Report:

1) ***Agreement for the Performance of Services with Vicki Vanderburg, Inc., dba Power Systems Operations***

EBIX Insurance No. S200001581

AGREEMENT FOR THE PERFORMANCE OF SERVICES BY AND BETWEEN THE CITY OF SANTA CLARA, CALIFORNIA, AND VICKI VANDERBURG, INC. DBA POWER SYSTEMS OPERATIONS

PREAMBLE

This agreement for the performance of services ("Agreement") is made and entered into on this _____ day of _____, 2014, ("Effective Date") by and between Vicki Vanderburg, Inc. dba Power Systems Operations, a Washington corporation, with its principal place of business located at 3204 116th Ave, NE, Bellevue, WA 98004 ("Contractor"), and the City of Santa Clara, California, a chartered California municipal corporation with its primary business address at 1500 Warburton Avenue, Santa Clara, California 95050 ("City"). City and Contractor may be referred to individually as a "Party" or collectively as the "Parties" or the "Parties to this Agreement."

RECITALS

A. City desires to secure professional services more fully described in this Agreement, at Exhibit A, entitled "Scope of Services"; and

B. Contractor represents that it, and its subcontractors, if any, have the professional qualifications, expertise, necessary licenses and desire to provide certain goods and/or required services of the quality and type which meet objectives and requirements of City; and,

C. The Parties have specified herein the terms and conditions under which such services will be provided and paid for.

The Parties agree as follows:

AGREEMENT PROVISIONS

1. EMPLOYMENT OF CONTRACTOR.

City hereby employs Contractor to perform services set forth in this Agreement. To accomplish that end, City may assign a Project Manager to personally direct the Services to be provided by Contractor and will notify Contractor in writing of City's choice. City shall pay for all such materials and services provided which are consistent with the terms of this Agreement.

2. SERVICES TO BE PROVIDED.

Except as specified in this Agreement, Contractor shall furnish all technical and professional services, including labor, material, equipment, transportation, supervision and expertise (collectively referred to as "Services") to satisfactorily complete the work required by City at his/her own risk and expense. Services to be provided to City are

more fully described in Exhibit A entitled "SCOPE OF SERVICES." All of the exhibits referenced in this Agreement are attached and are incorporated by this reference.

3. COMMENCEMENT AND COMPLETION OF SERVICES.

A. Contractor shall begin providing the services under the requirements of this Agreement upon receipt of written Notice to Proceed from City. Such notice shall be deemed to have occurred three (3) calendar days after it has been deposited in the regular United States mail. Contractor shall complete the Services within the time limits set forth in the Scope of Services or as mutually determined in writing by the Parties.

B. When City determines that Contractor has satisfactorily completed the Services, City shall give Contractor written Notice of Final Acceptance. Upon receipt of such notice, Contractor shall not incur any further costs under this Agreement. Contractor may request this determination of completion be made when, in its opinion, the Services have been satisfactorily completed. If so requested by the contractor, City shall make this determination within fourteen (14) days of its receipt of such request.

4. QUALIFICATIONS OF CONTRACTOR - STANDARD OF WORKMANSHIP.

Contractor represents and maintains that it has the necessary expertise in the professional calling necessary to perform services, and its duties and obligations, expressed and implied, contained herein, and City expressly relies upon Contractor's representations regarding its skills and knowledge. Contractor shall perform such services and duties in conformance to and consistent with the professional standards of a specialist in the same discipline in the State of California.

The plans, designs, specifications, estimates, calculations, reports and other documents furnished under Exhibit A shall be of a quality acceptable to City. The criteria for acceptance of the work provided under this Agreement shall be a product of neat appearance, well organized, that is technically and grammatically correct, checked and having the maker and checker identified. The minimum standard of appearance, organization and content of the drawings shall be that used by City for similar projects.

5. TERM OF AGREEMENT.

Unless otherwise set forth in this Agreement or unless this paragraph is subsequently modified by a written amendment to this Agreement, the term of this Agreement shall begin on the Effective Date of this Agreement and terminate at the end of the day five (5) years from the effective date.

6. MONITORING OF SERVICES.

City may monitor the Services performed under this Agreement to determine whether Contractor's operation conforms to City policy and to the terms of this Agreement. City may also monitor the Services to be performed to determine whether financial operations are conducted in accord with applicable City, county, state, and federal requirements. If

any action of Contractor constitutes a breach, City may terminate this Agreement pursuant to the provisions described herein.

7. WARRANTY.

Contractor expressly warrants that all materials and services covered by this Agreement shall be fit for the purpose intended, shall be free from defect, and shall conform to the specifications, requirements, and instructions upon which this Agreement is based. Contractor agrees to promptly replace or correct any incomplete, inaccurate, or defective Services at no further cost to City when defects are due to the negligence, errors or omissions of Contractor. If Contractor fails to promptly correct or replace materials or services, City may make corrections or replace materials or services and charge Contractor for the cost incurred by City.

8. PERFORMANCE OF SERVICES.

Contractor shall perform all requested services in an efficient and expeditious manner and shall work closely with and be guided by City. Contractor shall be as fully responsible to City for the acts and omissions of its subcontractors, and of persons either directly or indirectly employed by them, as Contractor is for the acts and omissions of persons directly employed by it. Contractor will perform all Services in a safe manner and in accordance with all federal, state and local operation and safety regulations.

9. RESPONSIBILITY OF CONTRACTOR.

Contractor shall be responsible for the professional quality, technical accuracy and coordination of the Services furnished by it under this Agreement. Neither City's review, acceptance, nor payments for any of the Services required under this Agreement shall be construed to operate as a waiver of any rights under this Agreement or of any cause of action arising out of the performance of this Agreement and Contractor shall be and remain liable to City in accordance with applicable law for all damages to City caused by Contractor's negligent performance of any of the Services furnished under this Agreement.

Any acceptance by City of plans, specifications, construction contract documents, reports, diagrams, maps and other material prepared by Contractor shall not in any respect absolve Contractor form the responsibility Contractor has in accordance with customary standards of good professional practice in compliance with applicable federal, state, county, and/or municipal laws, ordinances, regulations, rules and orders.

10. COMPENSATION AND PAYMENT.

In consideration for Contractor's complete performance of Services, City shall pay Contractor for all materials provided and services rendered by Contractor at the rate per hour for labor and cost per unit for materials as outlined in Exhibit B, entitled "SCHEDULE OF FEES."

Contractor will bill City on a monthly basis for Services provided by Contractor during the preceding month, subject to verification by City. City will pay Contractor within thirty (30) days of City's receipt of invoice.

11. TERMINATION OF AGREEMENT.

Either Party may terminate this Agreement without cause by giving the other Party written notice ("Notice of Termination") which clearly expresses that Party's intent to terminate the Agreement. Notice of Termination shall become effective no less than thirty (30) calendar days after a Party receives such notice. After either Party terminates the Agreement, Contractor shall discontinue further services as of the effective date of termination, and City shall pay Contractor for all Services satisfactorily performed up to such date.

12. NO ASSIGNMENT OR SUBCONTRACTING OF AGREEMENT.

City and Contractor bind themselves, their successors and assigns to all covenants of this Agreement. This Agreement shall not be assigned or transferred without the prior written approval of City. Contractor shall not hire subcontractors without express written permission from City.

13. NO THIRD PARTY BENEFICIARY.

This Agreement shall not be construed to be an agreement for the benefit of any third party or parties and no third party or parties shall have any claim or right of action under this Agreement for any cause whatsoever.

14. INDEPENDENT CONTRACTOR.

Contractor and all person(s) employed by or contracted with Contractor to furnish labor and/or materials under this Agreement are independent contractors and do not act as agent(s) or employee(s) of City. Contractor has full rights, however, to manage its employees in their performance of Services under this Agreement. Contractor is not authorized to bind City to any contracts or other obligations.

15. NO PLEDGING OF CITY'S CREDIT.

Under no circumstances shall Contractor have the authority or power to pledge the credit of City or incur any obligation in the name of City. Contractor shall save and hold harmless the City, its City Council, its officers, employees, boards and commissions for expenses arising out of any unauthorized pledges of City's credit by Contractor under this Agreement.

16. CONFIDENTIALITY OF MATERIAL.

All ideas, memoranda, specifications, plans, manufacturing procedures, data, drawings, descriptions, documents, discussions or other information developed or received by or for Contractor and all other written information submitted to Contractor in connection with the performance of this Agreement shall be held confidential by Contractor and shall not,

without the prior written consent of City, be used for any purposes other than the performance of the Services nor be disclosed to an entity not connected with performance of the Services. Nothing furnished to Contractor which is otherwise known to Contractor or becomes generally known to the related industry shall be deemed confidential.

17. USE OF CITY NAME OR EMBLEM.

Contractor shall not use City's name, insignia, or emblem, or distribute any information related to services under this Agreement in any magazine, trade paper, newspaper or other medium without express written consent of City.

18. OWNERSHIP OF MATERIAL.

All material, including information developed on computer(s), which shall include, but not be limited to, data, sketches, tracings, drawings, plans, diagrams, quantities, estimates, specifications, proposals, tests, maps, calculations, photographs, reports and other material developed, collected, prepared or caused to be prepared under this Agreement shall be the property of City but Contractor may retain and use copies thereof. City shall not be limited in any way or at any time in its use of said material. However, Contractor shall not be responsible for damages resulting from the use of said material for work other than Project, including, but not limited to, the release of this material to third parties.

19. RIGHT OF CITY TO INSPECT RECORDS OF CONTRACTOR.

City, through its authorized employees, representatives or agents shall have the right during the term of this Agreement and for three (3) years from the date of final payment for goods or services provided under this Agreement, to audit the books and records of Contractor for the purpose of verifying any and all charges made by Contractor in connection with Contractor compensation under this Agreement, including termination of Contractor. Contractor agrees to maintain sufficient books and records in accordance with generally accepted accounting principles to establish the correctness of all charges submitted to City. Any expenses not so recorded shall be disallowed by City.

Contractor shall submit to City any and all reports concerning its performance under this Agreement that may be requested by City in writing. Contractor agrees to assist City in meeting City's reporting requirements to the State and other agencies with respect to Contractor's Services hereunder.

20. CORRECTION OF SERVICES.

Contractor agrees to correct any incomplete, inaccurate or defective Services at no further costs to City, when such defects are due to the negligence, errors or omissions of Contractor.

21. FAIR EMPLOYMENT.

Contractor shall not discriminate against any employee or applicant for employment because of race, color, creed, national origin, gender, sexual orientation, age, disability, religion, ethnic background, or marital status, in violation of state or federal law.

22. HOLD HARMLESS/INDEMNIFICATION.

To the extent permitted by law, Contractor agrees to protect, defend, hold harmless and indemnify City, its City Council, commissions, officers, employees, volunteers and agents from and against any claim, injury, liability, loss, cost, and/or expense or damage, including all costs and reasonable attorney's fees in providing a defense to any claim arising therefrom, for which City shall become liable arising from Contractor's negligent, reckless or wrongful acts, errors, or omissions with respect to or in any way connected with the Services performed by Contractor pursuant to this Agreement.

23. INSURANCE REQUIREMENTS.

During the term of this Agreement, and for any time period set forth in Exhibit C, Contractor shall purchase and maintain in full force and effect, at no cost to City insurance policies with respect to employees and vehicles assigned to the Performance of Services under this Agreement with coverage amounts, required endorsements, certificates of insurance, and coverage verifications as defined in Exhibit C.

24. AMENDMENTS.

This Agreement may be amended only with the written consent of both Parties.

25. INTEGRATED DOCUMENT.

This Agreement represents the entire agreement between City and Contractor. No other understanding, agreements, conversations, or otherwise, with any representative of City prior to execution of this Agreement shall affect or modify any of the terms or obligations of this Agreement. Any verbal agreement shall be considered unofficial information and is not binding upon City.

26. SEVERABILITY CLAUSE.

In case any one or more of the provisions in this Agreement shall, for any reason, be held invalid, illegal or unenforceable in any respect, it shall not affect the validity of the other provisions, which shall remain in full force and effect.

27. WAIVER.

Contractor agrees that waiver by City of any one or more of the conditions of performance under this Agreement shall not be construed as waiver(s) of any other condition of performance under this Agreement.

28. NOTICES.

All notices to the Parties shall, unless otherwise requested in writing, be sent to City addressed as follows:

City of Santa Clara
Attention: Electric Department
1500 Warburton Avenue
Santa Clara, California 95050
or by facsimile at (408) 261-2717

And to Contractor addressed as follows:
Vicki Vanderburg, Inc. dba Power Systems Operations
3204 116th Ave. N.E.
Bellevue, WA 98004
or by scanned and email to vicki.vanderburg@powersysops.com

If notice is sent via facsimile/email, a signed, hard copy of the material shall also be mailed. The workday the facsimile/email was sent shall control the date notice was deemed given if there is a facsimile machine generated document on the date of transmission. A facsimile/email transmitted after 1:00 p.m. on a Friday shall be deemed to have been transmitted on the following Monday.

29. CAPTIONS.

The captions of the various sections, paragraphs and subparagraphs of this Agreement are for convenience only and shall not be considered or referred to in resolving questions of interpretation.

30. LAW GOVERNING CONTRACT AND VENUE.

This Agreement shall be governed and construed in accordance with the statutes and laws of the State of Washington. The venue of any suit filed by either Party shall be vested in the state courts of the County of King, or if appropriate, in the United States District Court, Western District of Washington, Seattle, Washington.

31. DISPUTE RESOLUTION.

A. Unless otherwise mutually agreed to by the Parties, any controversies between Contractor and City regarding the construction or application of this Agreement, and claims arising out of this Agreement or its breach, shall be submitted to mediation within thirty (30) days of the written request of one Party after the service of that request on the other Party.

B. The Parties may agree on one mediator. If they cannot agree on one mediator, the Party demanding mediation shall request the Superior Court of Santa Clara County to appoint a mediator. The mediation meeting shall not exceed one day (eight (8) hours). The Parties may agree to extend the time allowed for mediation under this Agreement.

C. The costs of mediation shall be borne by the Parties equally.

D. For any contract dispute, mediation under this section is a condition precedent to filing an action in any court. In the event of mediation which arises out of any dispute related to this Agreement, the Parties shall each pay their respective attorney's fees, expert witness costs and cost of suit through mediation only. In the event of litigation, the prevailing Party shall recover its reasonable costs of suit, expert's fees, and attorney's fees. If mediation does not resolve the dispute, the Parties agree that the matter shall be litigated in a court of law, and not subject to the arbitration provisions of the Public Contracts Code.

32. COMPLIANCE WITH ETHICAL STANDARDS.

Contractor shall:

A. Read Exhibit D, entitled "ETHICAL STANDARDS FOR CONTRACTORS SEEKING TO ENTER INTO AN AGREEMENT WITH THE CITY OF SANTA CLARA, CALIFORNIA"; and,

B. Execute Exhibit E, entitled "AFFIDAVIT OF COMPLIANCE WITH ETHICAL STANDARDS."

33. CONFLICT OF INTERESTS.

This Agreement does not prevent either Party from entering into similar agreements with other parties. To prevent a conflict of interest, Contractor certifies that to the best of its knowledge, no City officer, employee or authorized representative has any financial interest in the business of Contractor and that no person associated with Contractor has any interest, direct or indirect, which could conflict with the faithful performance of this Agreement. Contractor is familiar with the provisions of California Government Code Section 87100 and following, and certifies that it does not know of any facts which would violate these code provisions. Contractor will advise City if a conflict arises.

(Continued on Page 9 of 9)

///

///

///

34. PROGRESS SCHEDULE.

The Progress Schedule will be as set forth in the attached Exhibit F, entitled "MILESTONE SCHEDULE" if applicable.

The Parties acknowledge and accept the terms and conditions of this Agreement as evidenced by the following signatures of their duly authorized representatives. It is the intent of the Parties that this Agreement shall become operative on the Effective Date.

CITY OF SANTA CLARA, CALIFORNIA
a chartered California municipal corporation

APPROVED AS TO FORM:

RICHARD E. NOSKY, JR.
City Attorney

ATTEST:

ROD DIRIDON, JR.
City Clerk

JULIO J. FUENTES
City Manager
1500 Warburton Avenue
Santa Clara, CA 95050
Telephone: (408) 615-2210
Fax: (408) 241-6771

"CITY"

VICKI VANDERBURG, INC.
DBA POWER SYSTEMS OPERATIONS
a Washington corporation

By: Vicki M Vanderburg
VICKI VANDERBURG
Title: President
Address: 3204 116th Ave. N.E.
Bellevue, WA 98004
Telephone: (425) 681-0185

"CONTRACTOR"

State of Washington
County of KING

I certify that I know or have satisfactory evidence that VICKI VANDERBURG **is the person who appeared before me, and said person acknowledged that (he/she) signed this instrument and acknowledged it to be (his/her) free and voluntary act for the uses and purposes mentioned in the instrument.**

Dated: 6/5/14

(Signature)
(Printed name) Jonathan Weaver
Title
My appointment expires 7-11-16

JONATHAN WEAVER
Notary Public
State of Washington
My Commission Expires
July 11, 2016

AGREEMENT FOR THE PERFORMANCE OF SERVICES
BY AND BETWEEN THE
CITY OF SANTA CLARA, CALIFORNIA,
AND
VICKI VANDERBURG, INC. DBA POWER SYSTEMS OPERATIONS

EXHIBIT A

SCOPE OF SERVICES

The Services to be performed for the City by the Contractor under this Agreement are to provide software maintenance and support services as follows:

1.1 The Services to be performed for the City by PSO will provide the software maintenance and support services listed in Sections 1.2 through 1.4, below, to the City for the Licensed Software while the annual maintenance fee for the Current Release of the particular Licensed Software is in effect and paid in full. "Current Release" means the then-current unmodified, unimproved release of the Licensed Software made generally available by PSO to similarly situated customers. PSO shall not be obligated to provide maintenance or support services for any customizations or modifications to the Current Release as part of the Maintenance Fee. Such services may be available from PSO for an additional fee. PSO may provide maintenance and support services for the version of the Licensed Software immediately preceding the Current Release at its discretion.

1.2 PSO will use reasonable efforts to correct any failure in the Licensed Software to substantially comply with its Documentation ("Errors"), provided such Errors are identified by City in writing, are replicable by PSO, and confirmed by PSO to arise directly from the unmodified Licensed Software. In particular, PSO will use reasonable efforts to proceed as described below:

1.2.1 If an Error causes the Licensed Software to be wholly inoperative, or so severely impaired that City is unable to use the Licensed Software to perform any of its intended functions in accordance with the Documentation supplied by PSO, ("Severity 1 Error"), PSO will: (a) within one (1) business day after receiving notice of a Severity 1 Error from City, assign at least one qualified technician to dedicate full time within PSO normal business hours to provide a correction or procedural workaround sufficient to reduce or eliminate the effect of the Severity 1 Error; and (b) within five (5) business days after receiving notice of a Severity 1 Error from City, provide an error correction or procedural workaround sufficient to alleviate any material adverse effect of the Severity 1 Error on the operation of the Licensed Software.

1.2.2 If an Error causes the Licensed Software to fail to function in material accordance with its Documentation so that one or more material functions are severely impaired but the Licensed Software is still operational with respect to other functions ("Severity 2 Error"), PSO will, within ten (10) business days after receiving notice of a Severity 2 Error from

City, provide an error correction sufficient to alleviate any material adverse effect of the Severity 2 Error on the operation of the Licensed Software.

1.2.3 If an Error reported by City causes inconvenience, but does not materially and adversely affect the functionality of the Licensed Software ("Severity 3 Error"), PSO will endeavor to include a correction of such Severity 3 Error by the next Upgrade of the Licensed Software.

1.3 PSO will be available for telephone consultation during the hours and at the contacts provided on the PSO support site (www.powersysops.com).

1.4 PSO shall provide Upgrades to the standard version of the major Licensed Software at no additional cost to the City. "Upgrades" shall mean updated, upgraded, or revised versions of the Licensed Software which may include Error corrections and other enhancements that PSO, at its sole discretion, makes available to PSO customers who are similarly situated to City at no additional charge. Upgrades shall not include any new releases which contain substantially new or different functionality, which PSO licenses as separate products or which PSO creates at the request of a specific licensee.

2. OTHER SUPPORT TERMS

2.1 City shall designate in writing to PSO up to three (3) appropriate and knowledgeable persons to serve as City's liaisons with PSO and through whom all contacts and questions shall be presented to PSO. City's liaison persons may be changed by City by providing written or email notice to PSO.

2.2 In addition to the support and maintenance services described above, at City's request and with PSO assent, PSO may also perform additional services for City to correct difficulties or defects caused by City's errors, hardware system changes, interactions with other software of City, or any authorized changes or customizing made to the Licensed Software. Such additional services are not included in the fees set forth above and shall be provided at PSO's then applicable rates and charges.

2.3 In the event that City makes any unauthorized modifications, enhancements or improvements to the Licensed Software, PSO shall be relieved of its obligations to provide support and maintenance services for any portion of the Licensed Software which has been affected, directly or indirectly, by such changes, modifications, enhancements or improvements.

AGREEMENT FOR THE PERFORMANCE OF SERVICES
BY AND BETWEEN THE
CITY OF SANTA CLARA, CALIFORNIA,
AND
VICKI VANDERBURG, INC. DBA POWER SYSTEMS OPERATIONS

EXHIBIT B

FEE SCHEDULE

Fees for services provided under this Agreement shall be $50,000.00 per year. In no event shall the amount billed to City by Contractor for maintenance and support exceed two hundred fifty thousand dollars ($250,000.00) subject to budget appropriations over the five year period.

AGREEMENT FOR THE PERFORMANCE OF SERVICES
BY AND BETWEEN THE
CITY OF SANTA CLARA, CALIFORNIA,
AND
POWER SYSTEMS OPERATIONS

EXHIBIT C

INSURANCE REQUIREMENTS

Without limiting the Contractor's indemnification of the City, and prior to commencing any of the Services required under this Agreement, the Contractor shall purchase and maintain in full force and effect, at its sole cost and expense, the following insurance policies with at least the indicated coverages, provisions and endorsements:

A. COMMERCIAL GENERAL LIABILITY INSURANCE

1. Commercial General Liability Insurance policy which provides coverage at least as broad as Insurance Services Office form CG 00 01. Policy limits are subject to review, but shall in no event be less than, the following:

   $1,000,000 each occurrence
   $1,000,000 general aggregate
   $1,000,000 products/completed operations aggregate
   $1,000,000 personal injury

2. Exact structure and layering of the coverage shall be left to the discretion of Contractor; however, any excess or umbrella policies used to meet the required limits shall be at least as broad as the underlying coverage and shall otherwise follow form.

3. The following provisions shall apply to the Commercial Liability policy as well as any umbrella policy maintained by the Contractor to comply with the insurance requirements of this Agreement:

   a. Coverage shall be on a "pay on behalf" basis with defense costs payable in addition to policy limits;

   b. There shall be no cross liability exclusion which precludes coverage for claims or suits by one insured against another; and

   c. Coverage shall apply separately to each insured against whom a claim is made or a suit is brought, except with respect to the limits of liability.

B. BUSINESS AUTOMOBILE LIABILITY INSURANCE

Business automobile liability insurance policy which provides coverage at least as broad as ISO form CA 00 01, with minimum policy limits of not less than one million dollars ($1,000,000) each accident using, or providing coverage at least as broad as, Insurance Services Office form CA 00 01. Liability coverage shall apply to all owned, non-owned and hired autos.

C. WORKERS' COMPENSATION

1. Workers' Compensation Insurance Policy as required by statute and employer's liability with the following limits: at least one million dollars ($1,000,000) policy limit Illness/Injury by disease, and one million dollars ($1,000,000) for each Accident/Bodily Injury.

2. The indemnification and hold harmless obligations of Contractor included in this Agreement shall not be limited in any way by any limitation on the amount or type of damage, compensation or benefit payable by or for Contractor or any subcontractor under any Workers' Compensation Act(s), Disability Benefits Act(s) or other employee benefits act(s).

3. This policy must include a Waiver of Subrogation in favor of the City of Santa Clara, its City Council, commissions, officers, employees, volunteers and agents.

D. COMPLIANCE WITH REQUIREMENTS

All of the following clauses and/or endorsements, or similar provisions, must be part of each commercial general liability policy, and each umbrella or excess policy.

1. Additional Insureds. City of Santa Clara, its City Council, commissions, officers, employees, volunteers and agents are hereby added as additional insureds in respect to liability arising out of Contractor's work for City, using Insurance Services Office (ISO) Endorsement CG 20 10 11 85 or the combination of CG 20 10 03 97 and CG 20 37 10 01, or its equivalent.

2. Primary and non-contributing. Each insurance policy provided by Contractor shall contain language or be endorsed to contain wording making it primary insurance as respects to, and not requiring contribution from, any other insurance which the indemnities may possess, including any self-insurance or self-insured retention they may have. Any other insurance indemnities may possess shall be considered excess insurance only and shall not be called upon to contribute with Contractor's insurance.

3. Cancellation.

   a. Each insurance policy shall contain language or be endorsed to reflect that no cancellation or modification of the coverage provided due to non-payment of premiums shall be effective until written notice has been given

to City at least ten (10) days prior to the effective date of such modification or cancellation. In the event of non-renewal, written notice shall be given at least ten (10) days prior to the effective date of non-renewal.

b. Each insurance policy shall contain language or be endorsed to reflect that no cancellation or modification of the coverage provided for any cause save and except non-payment of premiums shall be effective until written notice has been given to City at least thirty (30) days prior to the effective date of such modification or cancellation. In the event of non-renewal, written notice shall be given at least thirty (30) days prior to the effective date of non-renewal.

4. Other Endorsements. Other endorsements may be required for policies other than the commercial general liability policy if specified in the description of required insurance set forth in Sections A through D of this Exhibit C, above.

E. ADDITIONAL INSURANCE RELATED PROVISIONS

Contractor and City agree as follows:

1. Contractor agrees to ensure that subcontractors, and any other party involved with the Services, who is brought onto or involved in the performance of the Services by Contractor, provide the same minimum insurance coverage required of Contractor, except as with respect to limits. Contractor agrees to monitor and review all such coverage and assumes all responsibility for ensuring that such coverage is provided in conformity with the requirements of this Agreement. Contractor agrees that upon request by City, all agreements with, and insurance compliance documents provided by, such subcontractors and others engaged in the project will be submitted to City for review.

2. Contractor agrees to be responsible for ensuring that no contract used by any party involved in any way with the project reserves the right to charge City or Contractor for the cost of additional insurance coverage required by this Agreement. Any such provisions are to be deleted with reference to City. It is not the intent of City to reimburse any third party for the cost of complying with these requirements. There shall be no recourse against City for payment of premiums or other amounts with respect thereto.

3. The City reserves the right to withhold payments from the Contractor in the event of material noncompliance with the insurance requirements set forth in this Agreement.

F. EVIDENCE OF COVERAGE

Prior to commencement of any Services under this Agreement, Contractor, and each and every subcontractor (of every tier) shall, at its sole cost and expense, purchase and maintain not less than the minimum insurance coverage with the endorsements and

deductibles indicated in this Agreement. Such insurance coverage shall be maintained with insurers, and under forms of policies, satisfactory to City and as described in this Agreement. Contractor shall file with the City all certificates and endorsements for the required insurance policies for City's approval as to adequacy of the insurance protection.

G. EVIDENCE OF COMPLIANCE

Contractor or its insurance broker shall provide the required proof of insurance compliance, consisting of Insurance Services Office (ISO) endorsement forms or their equivalent and the ACORD form 25-S certificate of insurance (or its equivalent), evidencing all required coverage shall be delivered to City, or its representative as set forth below, at or prior to execution of this Agreement. Upon City's request, Contractor shall submit to City copies of the actual insurance policies or renewals or replacements. Unless otherwise required by the terms of this Agreement, all certificates, endorsements, coverage verifications and other items required to be delivered to City pursuant to this Agreement shall be mailed to:

EBIX Inc.
City of Santa Clara Electric Department
P.O. 12010-S2 or 151 North Lyon Avenue
Hemet, CA 92546-8010 Hemet, CA 92543

Telephone number: 951-766-2280
Fax number: 770-325-0409
Email address: ctsantaclara@ebix.com

H. QUALIFYING INSURERS

All of the insurance companies providing insurance for Contractor shall have, and provide written proof of, an A. M. Best rating of at least A minus 6 (A- VI) or shall be an insurance company of equal financial stability that is approved by the City or its insurance compliance representatives.

AGREEMENT FOR THE PERFORMANCE OF SERVICES
BY AND BETWEEN THE
CITY OF SANTA CLARA, CALIFORNIA,
AND
VICKI VANDERBURG, INC. DBA POWER SYSTEMS OPERATIONS

EXHIBIT D

ETHICAL STANDARDS FOR CONTRACTORS SEEKING TO ENTER INTO AN AGREEMENT WITH THE CITY OF SANTA CLARA, CALIFORNIA

Termination of Agreement for Certain Acts.

A. The City may, at its sole discretion, terminate this Agreement in the event any one or more of the following occurs:

1. If a Contractor[1] does any of the following:

   a. Is convicted[2] of operating a business in violation of any Federal, State or local law or regulation;

   b. Is convicted of a crime punishable as a felony involving dishonesty[3];

   c. Is convicted of an offense involving dishonesty or is convicted of fraud or a criminal offense in connection with: (1) obtaining; (2) attempting to obtain; or, (3) performing a public contract or subcontract;

   d. Is convicted of any offense which indicates a lack of business integrity or business honesty which seriously and directly affects the present responsibility of a City contractor or subcontractor; and/or,

   e. Made (or makes) any false statement(s) or representation(s) with respect to this Agreement.

---

[1] For purposes of this Agreement, the word "Consultant" (whether a person or a legal entity) also refers to "Contractor" and means any of the following: an owner or co-owner of a sole proprietorship; a person who controls or who has the power to control a business entity; a general partner of a partnership; a principal in a joint venture; or a primary corporate stockholder [i.e., a person who owns more than ten percent (10%) of the outstanding stock of a corporation] and who is active in the day to day operations of that corporation.

[2] For purposes of this Agreement, the words "convicted" or "conviction" mean a judgment or conviction of a criminal offense by any court of competent jurisdiction, whether entered upon a verdict or a plea, and includes a conviction entered upon a plea of nolo contendere within the past five (5) years.

[3] As used herein, "dishonesty" includes, but is not limited to, embezzlement, theft, forgery, bribery, falsification or destruction of records, making false statements, failure to pay tax obligations, receiving stolen property, collusion or conspiracy.

2. If fraudulent, criminal or other seriously improper conduct of any officer, director, shareholder, partner, employee or other individual associated with the Contractor can be imputed to the Contractor when the conduct occurred in connection with the individual's performance of duties for or on behalf of the Contractor, with the Contractor's knowledge, approval or acquiescence, the Contractor's acceptance of the benefits derived from the conduct shall be evidence of such knowledge, approval or acquiescence.

B. The City may also terminate this Agreement in the event any one or more of the following occurs:

1. The City determines that Contractor no longer has the financial capability[4] or business experience[5] to perform the terms of, or operate under, this Agreement; or,

2. If City determines that the Contractor fails to submit information, or submits false information, which is required to perform or be awarded a contract with City, including, but not limited to, Contractor's failure to maintain a required State issued license, failure to obtain a City business license (if applicable) or failure to purchase and maintain bonds and/or insurance policies required under this Agreement.

C. In the event a prospective Contractor (or bidder) is ruled ineligible (debarred) to participate in a contract award process or a contract is terminated pursuant to these provisions, Contractor may appeal the City's action to the City Council by filing a written request with the City Clerk within ten (10) days of the notice given by City to have the matter heard. The matter will be heard within thirty (30) days of the filing of the appeal request with the City Clerk. The Contractor will have the burden of proof on the appeal. The Contractor shall have the opportunity to present evidence, both oral and documentary, and argument.

---

[4] Contractor becomes insolvent, transfers assets in fraud of creditors, makes an assignment for the benefit of creditors, files a petition under any section or chapter of the federal Bankruptcy Code (11 U.S.C.), as amended, or under any similar law or statute of the United States or any state thereof, is adjudged bankrupt or insolvent in proceedings under such laws, or a receiver or trustee is appointed for all or substantially all of the assets of Contractor.

[5] Loss of personnel deemed essential by the City for the successful performance of the obligations of the Contractor to the City.

AGREEMENT FOR THE PERFORMANCE OF SERVICES
BY AND BETWEEN THE
CITY OF SANTA CLARA, CALIFORNIA,
AND
VICKI VANDERBURG, INC. DBA POWER SYSTEMS OPERATIONS

EXHIBIT E

AFFIDAVIT OF COMPLIANCE WITH ETHICAL STANDARDS

I hereby state that I have read and understand the language, entitled "Ethical Standards" set forth in Exhibit D. I have the authority to make these representations on my own behalf or on behalf of the legal entity identified herein. I have examined appropriate business records, and I have made appropriate inquiry of those individuals potentially included within the definition of "Contractor" contained in Ethical Standards at footnote 1.

Based on my review of the appropriate documents and my good-faith review of the necessary inquiry responses, I hereby state that neither the business entity nor any individual(s) belonging to said "Contractor" category [i.e., owner or co-owner of a sole proprietorship, general partner, person who controls or has power to control a business entity, etc.] has been convicted of any one or more of the crimes identified in the Ethical Standards within the past five (5) years.

The above assertions are true and correct and are made under penalty of perjury under the laws of the State of California.

VICKI VANDERBURG, INC.
DBA POWER SYSTEMS OPERATIONS
a Washington corporation

By: Vicki MVanderburg
Name: VICKI VANDERBURG
Title: Principal

NOTARY'S ACKNOWLEDGMENT TO BE ATTACHED

Please execute the affidavit and attach a notary public's acknowledgment of execution of the affidavit by the signatory. If the affidavit is on behalf of a corporation, partnership, or other legal entity, the entity's complete legal name and the title of the person signing on behalf of the legal entity shall appear above. Written evidence of the authority of the person executing this affidavit on behalf of a corporation, partnership, joint venture, or any other legal entity, other than a sole proprietorship, shall be attached.

AGREEMENT FOR THE PERFORMANCE OF SERVICES
BY AND BETWEEN THE
CITY OF SANTA CLARA, CALIFORNIA,
AND
VICKI VANDERBURG, INC. DBA POWER SYSTEMS OPERATIONS

EXHIBIT F

MILESTONE SCHEDULE

(Not Applicable)

Meeting Date: 7/1/14

AGENDA REPORT

City of Santa Clara, California

Agenda Item # 6B-6

Date: June 23, 2014

To: City Manager for Council Action

From: Director of Human Resources

Subject: Approval of the Memorandum of Understanding Between the City of Santa Clara and the Employees' Association (Units 5, 7 & 8) for the term 2013-2015

EXECUTIVE SUMMARY:

The City of Santa Clara has negotiated in good faith with the Employees' Association (Units 5, 7 & 8) to develop a new Memorandum of Understanding (MOU). This new MOU will be in effect from December 22, 2013 through December 19, 2015.

Effective the pay period commencing December 22, 2013, for all classifications represented by these bargaining units, there will be no change in salary. Key elements of the parties' agreement include a stipend totaling an amount equal to 2.5% of base salary, which will be paid in two payments in equal amounts in the paychecks for the first full pay period in January, 2014, and the first full pay period in July 2014. Effective the pay period commencing December 21, 2014, for all classifications in these bargaining units, a stipend totaling an amount equal to 2.5% of base salary will be paid in two payments in equal amounts in the paychecks for the first full pay period in January, 2015, and the first full pay period in July 2015.

In addition, the City will cover the cost of any increases in the CalPERS rate, as well as any increase in the cost of the Kaiser employee-only rate for the 2014 and 2015 MOU years. Further information is detailed in the attached Memorandum of Understanding.

ADVANTAGES AND DISADVANTAGES OF ISSUE:

This MOU was developed in discussion between the City of Santa Clara and the Employees' Association (Units 5, 7 & 8), and reflects the agreement between them. The MOU has already been ratified by the Employees' Association membership. Thus, there are no disadvantages to Council approval.

ECONOMIC/FISCAL IMPACT

The cost of the two aforementioned stipends, as well as the projected increases for CalPERS and any increases in the Kaiser employee-only rate, are contained in the operational budget, which was adopted by the City of Santa Clara at the Council meeting of June 10, 2014. There is no further impact other than staff time and expense.

RECOMMENDATION:

That the Council approve the Memorandum of Understanding between the City of Santa Clara and the Employees' Association (Bargaining units 5, 7 & 8), for the term from December 22, 2013 through December 19, 2015, as is consistent with prior Council action.

Elizabeth C. Brown
Director of Human Resources

APPROVED:

Julio J. Fuentes
City Manager

Documents Related to this Report:
1) MOU between the City of Santa Clara and the Employees' Association (Units 5, 7 & 8)

MEMORANDUM OF UNDERSTANDING

between

CITY OF SANTA CLARA

and

CITY OF SANTA CLARA EMPLOYEES' ASSOCIATION UNITS 5, 7 & 8

DECEMBER 22, 2013 – DECEMBER 19, 2015

MEMORANDUM OF UNDERSTANDING
between
CITY OF SANTA CLARA
and
CITY OF SANTA CLARA EMPLOYEES' ASSOCIATION
representing
MANAGEMENT AND CONFIDENTIAL, UNIT #5
CONSTRUCTION TECHNICIAN, UNIT #7
ADMINISTRATION AND CLERICAL, UNIT #8

DECEMBER 22, 2013 – DECEMBER 19, 2015

Table of Contents

1. TOTAL COMPENSATION 1
2. ADJUSTMENT OF TOTAL COMPENSATION 2
3. CALIFORNIA PUBLIC EMPLOYEES RETIREMENT SYSTEM (CALPERS) 6
4. HEALTH/DENTAL INSURANCE PREMIUMS 6
5. DISABILITY INSURANCE 7
6. SICK LEAVE/FAMILY SICK LEAVE/PERSONAL LEAVE 8
7. BEREAVEMENT LEAVE 9
8. HOLIDAYS AND AWARDED CTO 9
9. VACATION ACCRUAL AND USAGE 10
10. RETIREE MEDICAL 11
11. VOLUNTARY EMPLOYEE BENEFICIARY ASSOCIATION (VEBA) 11
12. RETIREE MEDICAL REIMBURSEMENT BENEFIT 12
13. GROUP LONG TERM CARE 12
14. NIGHT DIFFERENTIAL PAY 13
15. OUT OF CLASS PAY 13
16. PREFERRED CTO/STRESS REDUCTION PROGRAM 14
17. OVERTIME 14
18. INDUSTRIAL INJURY/CONTINUATION OF INSURANCE BENEFITS WHILE ON WORKERS' COMPENSATION 16
19. FLEXTIME 16
20. RAINGEAR REIMBURSEMENT/UNIFORM ALLOWANCE 16
21. MILEAGE ALLOWANCE 17
22. AGENCY SHOP 17
23. EMERGENCY PAID LEAVE POOL 18
24. JURY DUTY 20
25. LIMITED/ALTERNATIVE DUTY 21
26. AFFIRMATIVE RESPONSE TO EMERGENCY OVERTIME 22
27. LAY-OFF POLICY 22
28. UNPAID TIME OFF 25
29. PERMANENT PART-TIME EMPLOYEES' WORK HOURS 25
30. STEP INCREASE EFFECTIVE DATE 26
31. REDUCED WORK WEEK/REDUCED PAY AND VOLUNTARY TIME OFF (VTO) 26
32. ADA STATEMENT 27
33. FOOTWEAR REIMBURSEMENT 27
34. BILINGUAL PAY 28
35. REST PERIOD FOLLOWING EMERGENCY WORK 28

36. ALTERNATE WORK SCHEDULE (NINE-EIGHTY SCHEDULE) 29
37. DOMESTIC PARTNERS 29
38. PAY PERIODS 29
39. FLEXIBLE SPENDING PLAN, INTERNAL REVENUE CODE, SECTION 125 29
40. EMPLOYEE ASSISTANCE PROGRAM 30
41. ASSOCIATION RELEASE TIME 30
42. ASSOCIATION PROBLEM SOLVING COMMITTEE 30
43. NEGOTIATIONS PREPARATION 30
44. NEXT MEMORANDUM OF UNDERSTANDING 30
45. EMPLOYEE RIGHTS 31
46. MANAGEMENT RIGHTS 31
47. SCOPE OF THIS MEMORANDUM OF UNDERSTANDING 32
48. PERSONNEL AND SALARY RESOLUTION 32
APPENDIX A 34

Alphabetical Table of Contents

ADA STATEMENT 27
ADJUSTMENT OF TOTAL COMPENSATION 2
AFFIRMATIVE RESPONSE TO EMERGENCY OVERTIME 22
AGENCY SHOP 17
ALTERNATE WORK SCHEDULE (NINE-EIGHTY SCHEDULE) 29
APPENDIX A 34
ASSOCIATION RELEASE TIME 30
ASSOCIATION PROBLEM-SOLVING COMMITTEE 30
BEREAVEMENT LEAVE 9
BILINGUAL PAY 28
CALIFORNIA PUBLIC EMPLOYEES RETIREMENT SYSTEM (CALPERS) 6
DISABILITY INSURANCE 7
DOMESTIC PARTNERS 29
EMERGENCY PAID LEAVE POOL 18
EMPLOYEE ASSISTANCE PROGRAM 30
EMPLOYEE RIGHTS 31
FLEXIBLE SPENDING PLAN, INTERNAL REVENUE CODE, SECTION 125 29
FLEXTIME 16
FOOTWEAR REIMBURSEMENT 27
GROUP LONG TERM CARE 12
HEALTH/DENTAL INSURANCE PREMIUMS 6
HOLIDAYS AND AWARDED CTO 9
INDUSTRIAL INJURY/CONTINUATION OF INSURANCE BENEFITS WHILE ON WORKERS' COMPENSATION 16
JURY DUTY 20
LAY-OFF POLICY 22
LIMITED/ALTERNATIVE DUTY 21
MANAGEMENT RIGHTS 31
MILEAGE ALLOWANCE 17
NEGOTIATIONS PREPARATION 30
NEXT MEMORANDUM OF UNDERSTANDING 30
NIGHT DIFFERENTIAL PAY 13
OUT OF CLASS PAY 13
OVERTIME 14
PAY PERIODS 29
PERMANENT PART-TIME EMPLOYEES' WORK HOURS 25
PERSONNEL AND SALARY RESOLUTION 32
PREFERRED CTO/STRESS REDUCTION PROGRAM 14
RAINGEAR REIMBURSEMENT/UNIFORM ALLOWANCE 16
REDUCED WORK WEEK/REDUCED PAY AND VOLUNTARY TIME OFF (VTO) 26
REST PERIOD FOLLOWING EMERGENCY WORK 28
RETIREE MEDICAL REIMBURSEMENT BENEFIT 12
RETIREE MEDICAL 11
SCOPE OF THIS MEMORANDUM OF UNDERSTANDING 32
SICK LEAVE/FAMILY SICK LEAVE/PERSONAL LEAVE 8
STEP INCREASE EFFECTIVE DATE 26
TOTAL COMPENSATION 1
UNPAID TIME OFF 25

VACATION ACCRUAL AND USAGE 10
VOLUNTARY EMPLOYEE BENEFICIARY ASSOCIATION (VEBA) 11

MEMORANDUM OF UNDERSTANDING
between
CITY OF SANTA CLARA
and
CITY OF SANTA CLARA EMPLOYEES' ASSOCIATION
representing
MANAGEMENT AND CONFIDENTIAL, UNIT #5
CONSTRUCTION TECHNICIAN, UNIT #7
ADMINISTRATION AND CLERICAL, UNIT #8

DECEMBER 22, 2013 – DECEMBER 19, 2015

In accordance with the provisions of Section 18 of the City of Santa Clara Employer-Employee Relations Resolution #2979, this Memorandum of Understanding was made and entered into by and between the designated representatives of the City of Santa Clara (a public agency as defined in Section 3501 (c) of Chapter 10 of Division 4 of Title I of the Government Code of the State of California), hereinafter referred to as the City, and the designated representatives of the City of Santa Clara Employees' Association, representing Management and Confidential Unit #5, Construction Technician Unit #7, and Administration and Clerical Unit #8, (a recognized employee organization as defined in Section 3501 (b) of Chapter 10 of Division 4 of Title I of the Government Code of the State of California), hereinafter referred to as the Employees Association. This agreement constitutes the results of discussions between the City Management Staff and the Employees Association on all matters within the scope of representation. The term of this agreement shall be from December 22, 2013 through December 19, 2015.

WITNESSETH that:

WHEREAS the parties hereto desire to facilitate the peaceful adjustment of differences that may from time to time arise between them, to promote harmony and efficiency to the end that the City, Employees Association, and the general public may benefit therefrom, and to establish fair and equitable wages, hours and working conditions for certain hereinafter designated employees of the City,

NOW, therefore, the parties hereto do agree to propose and recommend that the City Council adopt the following, effective as indicated:

1. <u>TOTAL COMPENSATION</u>

A. For the purposes of this agreement, total compensation is defined to include the following items:
   1) Salary
   2) Fringe Benefits:
      a. Retirement (including Social Security)*
      b. Holiday Pay*
      c. Vacation Pay*
      d. Insurance
         (1) Life
         (2) Health
         (3) Dental

*These elements are directly tied to salary and move as a function of salary. No independent movement is allowed in these element areas.

(4) Long-Term Disability
(5) Vision Care

e. Retiree Medical
f. Other (including VEBA)

B. It will be the prerogative of the Employees' Association to allocate the distribution of total compensation monies among the following element areas: 1) Salary, 2) Life Insurance Premiums, 3) Medical Insurance Premiums, subject to the requirement that the amount of the Kaiser single health insurance premium, including the PEMHCA minimum, be included in the mandatory section of the Salary Adjustment Form, and 4) Long-Term Disability Insurance, except as otherwise noted in this Memorandum of Understanding.

C. Except where noted, total compensation of comparing agencies as defined above will be determined by computing the total compensation effective October 1 afforded similarly represented classifications of Combination Inspector in the comparing agencies of the cities of San Jose, Mountain View, Palo Alto, Milpitas and Sunnyvale and obtaining the average total compensation afforded those agencies.

2. ADJUSTMENT OF TOTAL COMPENSATION

A. 2014 MOU Year: Effective the pay period commencing December 22, 2013, for all classifications represented by the bargaining unit, a signing bonus stipend totaling an amount equal to 2.5% of base salary will be paid in two payments in equal amounts in the paychecks for the first full pay period in January 2014 and the first full pay period in July 2014 (1.25% of base salary in January 2014 and 1.25% in July 2014). Employees must be in a paid status or on an approved leave in the applicable Employees Association represented classification as of the last day of the applicable pay period.

B. 2015 MOU Year: Effective the pay period commencing December 21, 2014, for all classifications represented by the bargaining unit, a further signing bonus stipend totaling an amount equal to 2.5% of base salary will be paid in two payments in equal amounts in the paychecks for the first full pay period in January 2015 and the first full pay period in July 2015 (1.25% of base salary in January 2015 and 1.25% in July 2015). Employees must be in a paid status or on an approved leave in the applicable Employees Association represented classification as of the last day of the applicable pay period.

C. The CalPERS increases from fiscal years 2012-13 to 2013-14 and from fiscal year 2013-14 to 2014-15 will not adversely impact salaries of Employees' Association employees.

D. The City will pay any increase in the cost of the Kaiser employee only rate for the 2014 and 2015 calendar years. These increases will not adversely affect the salaries of Employees' Association employees.

E. The Salary Adjustment Form and "Total Compensation" methodology described in Sections 1 and 2 of the 12/08-12/11 MOU will not be used in

either MOU year to determine salary (which salary would not change from the prior year) or other element of compensation.

F. For the duration of this 2013-2015 MOU, the provisions specified below in this Section 2(D) are suspended.

On or before September 1, 2000, and September 1, 2002, the City and/or the Association may present comparison data between Santa Clara and the cities of Mountain View, Palo Alto, Milpitas, San Jose and Sunnyvale for not more than 35 represented classes in 2000 and fifteen (15) represented classifications in 2002, and no more than 15 every second year thereafter, which the Association believes to be responsible for essentially the same work in the comparison jurisdictions for review by the Parties. The parties will meet to determine if they can agree on what classifications are comparable. If the City and the Association are in agreement that the classifications presented are appropriate for comparison, the City and the Association will determine if the total compensation after five years of service in the Santa Clara classification is more than 2.5% below the average of the classifications presented for review. If there are less than two appropriate comparisons among the jurisdictions listed, no adjustment will be made even though Santa Clara is more than 2.5% below the comparison jurisdiction. However, if there are less than two comparable classes available within the comparison jurisdictions, then either Party may present comparable information from at least two and up to five cities or special districts, including any benchmark agency, within Santa Clara, San Mateo and Alameda counties for consideration.

On or before January 1, 2001 and January 1, 2003 the parties will prepare a list of all Association represented classifications for which the parties have not completely agreed on all comparable classifications. This list shall state each party's determination of comparability, with explanatory data as deemed appropriate. This list shall be presented to Santa Clara County Employee Relations Service (ERS) for determination of comparability. ERS shall limit its determination of comparability to classifications submitted by either party. The determination by ERS shall include the reason(s) in writing for each individual determination. Nothing in this MOU precludes the parties from agreeing on one or more of the classification comparables before the determination by ERS.

Within 30 days of receiving the determination of comparability from ERS, if required, the City will determine if the total compensation after 5 years of service in the Santa Clara class is 2.5% or more below the average total compensation in the comparison jurisdictions. The City will place the Santa Clara class on the current salary range which will bring the total compensation for Santa Clara to equal or above the comparison average, effective the first pay period in 2001 and in 2003.

For purposes of this section of the MOU, total compensation for comparison agencies is defined as salary and fringe benefits which are paid by the agency to the employee or on the employees behalf and which are available to each employee in the classification specified in the survey that are

recurring in nature after five years' service in that classification as shown below. For the City of Santa Clara, total compensation shall be defined as those elements listed in Section I of this MOU.

G. It is recognized by both parties to this agreement that it is their mutual responsibility to independently verify, to the extent possible, the accuracy of the information upon which total compensation and salary adjustments are made. Should it be discovered by either party that adjustment(s) to salary, total compensation and fringe benefits are based on erroneous information or has been erroneously computed, the necessary corrective action will be taken as soon as practical after the discovery and notice of the error has been given. It is the mutual responsibility of both parties to report any suspected error immediately upon discovery to the other party. However, the period for which there will be a right to recover any monies which are either overpaid by the City or underpaid to the employee shall be limited to an adjustment period of up to 90 calendar days from the date the error was first reported to the other party. The corrective action will be taken even in circumstances where the error may bridge successive MOU's, but the recovery will still be limited to amounts owed or owing during the prior 90 calendar days. The ninety (90) calendar-day period will begin upon the date of written notification by personal service upon the other party.

Right of recovery by the City of overpayment shall be limited to recovery over the same time period as the overpayment was made. Said repayment will begin with the next paycheck following final determination of the amount to be repaid. Underpayment to the employee shall be made by the City in a lump sum of the amount owed on the next regular paycheck following final determination of the amount to be paid.

H. There shall be no employee generated reclassification requests during the term of this MOU.

DEFINITIONS

1. Top Step Salary -	Maximum step in the monthly salary range for classification (excluding seniority or longevity steps).
2. Life, Medical, Dental, LTD and other Insurance -	Maximum agency monthly contribution per employee to insurance premiums as defined in Item 1 A 2 plus maximum agency monthly contribution to other fringe benefit insurance premiums.
3. Retirement -	Maximum agency monthly contribution per employee, including employer paid employee contribution, to retirement and social security plans.
4. Holiday Pay -	Number of paid holidays allowed by agency per year times daily salary rate

	of classification, divided by 12.
5. Vacation Pay -	Maximum number of annual paid vacation days allowed by agency per employee upon completion of five (5) years' service times daily salary rate for classification divided by 12.
6. Other -	Monthly salary equivalent of or maximum monthly agency contribution to other fringe benefits available to all full-time agency employees. To be eligible for inclusion in comparison data, such benefits of the comparing jurisdiction must be of a recurring nature or become part of their compensation base. This category includes the City's monthly contributions to employees' VEBA accounts (to be included on the Salary Adjustment Form "below the line").
7. Total Compensation -	The sum of Items 1 through 6 above.
8. Daily Salary Rate -	Top step salary as defined in Item 1 above times 12 divided by total number of regular work hours per year times number of regular work hours per day

TABULAR DESCRIPTION OF
ADJUSTMENT OF TOTAL COMPENSATION

For the duration of this 2013-2015 MOU, the provisions specified in this TABULAR DESCRIPTION OF ADJUSTMENT OF TOTAL COMPENSATION are suspended.

By September 1, 2000 & September 1, 2002	Association presents total comparison information that shows essential equity in job duties among comparison survey jurisdictions for not more than 35 represented classes in 2000 and not more than15 represented classifications in 2002. If City and Association are in agreement with comparison equity, City and Association will determine if the Santa Clara classification is 2.5% or more below the survey average for total compensation as provided for in Section 2.I.

First Pay Period of 2001 & 2003	City implements salary increases on the City's "A" Salary Schedule for classifications determined to be 2.5% or more below the survey average in amounts necessary to bring those classifications to equal or above the total compensation survey average on the common salary schedule as provided for in Section IIG I.

3. CALIFORNIA PUBLIC EMPLOYEES RETIREMENT SYSTEM (CALPERS)

The City has contracted with CalPERS to provide employees with the 2.7% at age 55 formula with "highest single year" effective December 17, 2006 for "Classic" or "Legacy" employees as defined by CalPERS and the Public Employees' Pension Reform Act of 2013 (PEPRA) and the 2.0% at 62 with "highest three year average" for "New Members" as defined by CalPERS and PEPRA. Classic/Legacy employees shall continue to pay the employee contribution rate and New Members shall contribute 50% of the "normal cost" of their pension formula as required and defined by CalPERS and PEPRA. The City's contributions to pension shall continue to be outside of (i.e. "below the line" on) the Salary Adjustment Form and employees shall not receive a salary decrease as a direct result of an increase in CalPERS employer retirement rate under the CalPERS contract between CalPERS and the City. The employee's CalPERS retirement contribution will continue to be treated as tax deferred.

4. HEALTH/DENTAL INSURANCE PREMIUMS

A. Mandatory Health Allocation

Kaiser single employee health insurance will be included in the Salary Adjustment Form as a Mandatory Allocation. The amount allocated for Kaiser single employee health insurance will be the premium minus the statutorily required Public Employees Medical and Hospital Care Act (PEMHCA) contribution. The PEMHCA contribution will remain in the Salary Adjustment Form as a separate Mandatory Allocation. The City will change the dollar amount designated within the Salary Adjustment Form for Kaiser single employee health insurance when the premium amount changes annually and/or when the statutorily required PEMHCA contribution changes.

B. Discretionary Health Allocation

The Association may (on a once-a-year basis, commencing with the beginning of the calendar year) designate within the discretionary portion of the Salary Adjustment Form a fixed monthly sum for all represented employees for employee plus one or full family coverage. The Association's monthly allocation for health insurance premiums may be set to an amount not to exceed 10% above the lowest cost family health insurance coverage available. If the health insurance premium for an individual employee exceeds the amount allocated, the balance is paid by way of a salary deduction from the pay of the individual employee.

C. Discretionary Dental Allocation

The Association may (on a once-a-year basis, commencing with the beginning of the calendar year), designate within the discretionary portion of the Salary Adjustment Form a fixed monthly sum for all represented employees for dental insurance premiums. If the dental insurance premium for an individual employee exceeds the amount allocated, the balance is paid by way of a salary deduction from the pay of the individual employee.

D. Health/Dental Allocation Refund

All individual employees having health and dental insurance payments made on his/her behalf that are less than the monthly amount allocated by the Association will have the difference refunded on a once-a-month basis. Such payments shall be made on the first paycheck issued in each month. For health insurance, this refund program requires the following qualifications: 1) it must be a health insurance program; and 2) it must be a health insurance vendor with a current contract with the City through the CalPERS Health Insurance Program. City health insurance coverage will be at the option of the individual employee. It is the intent of this section that employees opting not to have City health coverage will be refunded the full amount allocated on their behalf for health insurance. Dental insurance premium refund will depend on whether or not the monthly amount allocated exceeds the individual employee's enrollment status.

E. The City shall comply with the provisions of the Family and Medical Leave Act of 1993 (FMLA), and the California Family Rights Act of 1993 (CFRA).

5. <u>DISABILITY INSURANCE</u>

A. STATE DISABILITY INSURANCE

The City will continue to contract with the State of California Employee Development Department to provide Disability Insurance (SDI) for represented employees. All cost of SDI insurance is to be paid for as a payroll deduction by the individual employee.

B. LONG TERM DISABILITY

All represented employees will be enrolled in a mandatory long term disability insurance program as determined by the Association. This LTD plan will have a maximum 30 day waiting period and the maximum monthly benefit will include those offsets required by law such as, but not limited to, SDI, retirement, reduced work schedule, worker's compensation, social security, and Railroad retirement. The maximum monthly premium will be deducted from each employee's total compensation prior to taxes. Any unused portion of the premium will be refunded in the same manner as the medical insurance premiums.

6. SICK LEAVE/FAMILY SICK LEAVE/PERSONAL LEAVE

A. SICK LEAVE

1) Employees shall accrue ninety-six (96) hours of sick leave per year of regular City employment. Sick leave shall accrue in equal amounts each pay period. As described in the Personnel and Salary Resolution, employees must be in a paid status for 36 hours per bi-weekly pay period in order to accrue sick leave.

2) Use of sick leave will be under the same terms and conditions as are now in place. Personal leave, vacation and CTO may be used to supplement sick leave as available.

B. FAMILY SICK LEAVE

1) Not more than forty eight (48) hours of sick leave within one calendar year shall be granted to any employee for the care or attendance upon members of his/her immediate family, unless the use of additional leave is approved by the City Manager or designee. "Immediate family" is defined as spouse, parent, child, sibling, grandparent, grandchild, aunt, uncle, niece, nephew, first cousin, parent by marriage, step-parent, step-child, grandparent by marriage, son-in-law, daughter-in-law, sibling by marriage, foster parent, domestic partner, anyone residing with employee, or anyone dependent on the employee for care.

C. PERSONAL LEAVE

1) Each calendar year, an employee is entitled to use thirty-two (32) hours of accrued sick leave as Personal Leave, provided he/she has sufficient sick leave balance available.

2) Personal leave is intended to provide the employee with paid time off to attend to legitimate personal business that may arise from time to time during the year. Personal leave may be used to supplement sick leave as required.

3) The employee has an obligation to provide as much notice as possible so as to allow for proper scheduling by the department.

4) Providing that the minimal requirements of proper notification have been met, the use of Personal Leave should not be denied.

The adoption of this program does not modify the existing ability of the employee to exchange up to 96 hours of accrued sick leave for up to 48 hours of vacation, based upon two (2) hours of sick leave for one (1) hour of vacation as provided and defined in the Personnel and Salary Resolution.

7. BEREAVEMENT LEAVE

A. The City will provide employees with a paid bereavement leave benefit to attend to the customary obligations arising from the death of a member of an employee's immediate family, as defined in this Section. Employees are eligible to receive up to forty (40) hours of bereavement leave in the event of the death of a parent, child, or sibling of the employee, employee's spouse or employee's domestic partner (including, in each case, step, adoptive and in-law), spouse or domestic partner; up to three (3) work days (regardless of shift assigned) of bereavement leave in the event of the death of a grandparent, grandchild, aunt or uncle of the employee, employee's spouse or employee's domestic partner (including, in each case, step, adoptive and in-law); and up to one (1) work day (regardless of shift assigned) of bereavement leave in the event of the death of a great-grandparent, great-grandchild, niece, nephew, or first cousin of the employee, employee's spouse or employee's domestic partner (including, in each case, step, adoptive and in-law).

B. The bereavement leave benefit is based on each death occurrence and is not charged to the Salary Adjustment Form.

C. Up to five (5) work days of additional bereavement leave may be charged to an employee's sick leave balance with City Manager approval.

D. At the request of the City, the employee will provide verification.

8. HOLIDAYS AND AWARDED CTO

A. Holidays

The City will observe the following thirteen (13) dates (or days) as City Holidays and City offices will be closed in observance of those holidays. Represented employees will be entitled to eight (8) hours of paid time off in observation for each of the holidays listed.

> New Year's Day (January 1), Martin Luther King Day (3rd Monday in January), President's Day (3rd Monday in February), Spring Holiday (observed on Good Friday), Memorial Day (last Monday in May), Independence Day (July 4), Labor Day (1st Monday in September), Admission Day (September 9), Columbus Day (2nd Monday in October), Veteran's Day (November 11), Thanksgiving Day (4th Thursday in November), Friday after Thanksgiving, and Christmas Day (December 25). Holidays which fall on a specific date and which fall on Saturday are observed the preceding Friday. Holidays which fall on a specific date and which fall on Sunday are observed the following Monday.

January 1, July 4 and December 25 will be the actual paid holiday for represented employees who are assigned to departments which have 24-hour per day, 7-day per week operations and who customarily work on City Holidays.

Additionally, the City will observe four additional non-permanent paid holidays on 12/26/13, 12/27/13, 12/30/13 and 12/31/13 in the first MOU year and on 12/26/14, 12/29/14, 12/30/14, and 12/31/14 in the second MOU Year. These non-permanent paid holidays would be only for these MOU years, and this provision will sunset and expire on December 19, 2015. Employees whose jobs require them to work on these holidays would receive banked paid days off instead, which could be used during the applicable MOU year with the approval of the applicable supervisor/manager.

B. Awarded Compensatory Time Off (CTO)

On January 1 the City will credit each represented employee with 16 hours of compensatory time off (CTO) (or the proportionate share if the employee is working a reduced work schedule). The 16-hour CTO accrual will be included on the Salary Adjustment Form for the benchmark classification. This CTO shall be available for use by the employee under the same terms and conditions required by the department for use of regularly accrued CTO. Unused CTO may be traded for cash payout at any time after accrual.

Employees hired after January 1, 2004 shall be credited with a pro-rata share of the awarded CTO based upon the proportion of the calendar year remaining after their hire date.

9. VACATION ACCRUAL AND USAGE

Represented employees will be entitled to use vacation as it is earned under the following conditions:

A. Vacation may not be taken during the first 6 months of regular employment.

B. Vacation will be earned on a bi-weekly basis (1/26 of the yearly accrual) provided that the employee is in a paid status for at least 2/3 of the hours (53.4 hours) of that pay period.

C. Accrued vacation time will be paid off regardless of term of employment.

D. Annual and maximum vacation accrual rates, calculated to four decimal points for accuracy, are as follows:

COMPLETED YEARS OF SERVICE	ANNUAL ACCRUAL	MAXIMUM ACCRUAL
1 through 4	80 hours	400 hours
5 through 9	120 hours	400 hours
10 through 15	168 hours	400 hours
16 through 20	176 hours	400 hours
21 years +	192 hours	400 hours

E. The existing practice that requires an employee to cease accrual of vacation in any pay period during which his/her vacation balance exceeds the maximum accrual as shown in Section 9(D) is as follows:

Employees are limited to the maximum accrual of vacation as defined, based on years of service. Employees may temporarily exceed the allowed maximum vacation accrual, subject to the vacation balance as of the end of the pay period, which includes December 31 of each year being reduced to the maximum allowable accrual. The current vacation balance, the year-to-date accrual and the current pay period usage are all shown on the employees' pay check stub and are the responsibility of the employee to track for compliance with this provision.

Vacation that is temporarily allowed to exceed the maximum allowable accrual and is removed from the vacation balance as of the end of the pay period that included December 31 of each year may be donated to the Emergency Paid Leave Fund at the direction of the employee.

F. Vacation may be used in one-tenth (1/10) hour increments.

G. Employees who begin work prior to July 1 or continue to be employed after the first calendar year of employment are required to use at least one-half of the vacation accrued during the prior calendar year during the current calendar year.

H. Subject to having a sufficient balance of accrued vacation available, an employee may, on a once per year basis, be paid at his/her current hourly pay rate for a maximum of forty (40) hours of accrued vacation if he/she has taken at least ½ of the vacation earned in the previous calendar year during the current calendar year.

I. In lieu of receiving a vacation-leave cash payout at retirement, the Employees' Association may vote to roll accrued vacation leave hours into the employee's VEBA account, subject to Association compliance with Federal rules associated with employee contributions of vacation leave to their VEBA accounts.

10. RETIREE MEDICAL

A. Comparison of the percentage change in the average monthly total compensation for the benchmark position in the comparing agencies will include each agency's contribution toward retiree medical as an element of total compensation. The amount shall be the maximum agency monthly contribution per retiree times the number of retirees divided by the number of budgeted full time employees.

B. The provisions for the Association participation in the CalPERS Health Insurance program adopted by the Addendum to the Memorandum of Understanding between the City and the Association dated June 16, 1987 (attached) are incorporated into this MOU.

11. VOLUNTARY EMPLOYEE BENEFICIARY ASSOCIATION (VEBA)

The City established a Voluntary Employee Beneficiary Association (VEBA) trust under Internal Revenue Code Section 501(c)(9) for the purpose of providing a

defined contribution post-retirement medical benefit for employees. The City previously stopped making contributions to employee VEBA accounts effective December 21, 2003, though December 26, 2009 and employee VEBA accounts remained open for other potential contributions. Effective December 27, 2009, the City began contributing $50 per month per represented employee. Per the City's contract with VEBA, VEBA's consulting fee will be deducted from plan participant's accounts. These contributions shall be made "below the line," on the Salary Adjustment Form (i.e. excluded from calculation of salary adjustments based on total compensation adjustments) but shall be included on Bay Area ERS total compensation surveys. Specific information regarding the Plan is referenced in the Plan Document.

A VEBA is a tax-exempt trust account formed under Internal Revenue Code Section 501(c)(9) designed to accumulate assets to fund the future payment of qualified unreimbursed medical expenses (including specified insurance premiums). At retirement, participants may withdraw the accumulated plan benefits to pay for unreimbursed health insurance premiums, qualified long term care insurance premiums, and other qualified unreimbursed medical expenses and will not be taxed under non-medical purposes current state and federal law. Withdrawals cannot be made for non-medical purposes.

12. RETIREE MEDICAL REIMBURSEMENT BENEFIT

The Retiree Medical Reimbursement Benefit shall provide each employee who retires from the City with at least ten (10) years of regular City service with a reimbursement for unreimbursed single retiree health insurance premium beginning with the first full month after retirement from City service and ending with the last full month before the retiree's sixty-fifth (65th) birthday. Starting with the month in which the retiree turns age sixty-five (65), the reimbursement will be for unreimbursed Medicare single retiree supplemental health insurance premium. For premiums paid in calendar year 2013 that will be reimbursed in 2014, the City will reimburse an amount up to $313 per month, including the PEMHCA minimum, for unreimbursed single retiree health insurance premium or up to $188 per month, including the PEMHCA minimum, for unreimbursed Medicare single retiree supplemental health insurance premium. The amount of the City reimbursement will be adjusted thereafter once each year by the percentage change from October to October in the San Francisco-Oakland-San Jose urban wage earners and clerical workers (W) consumer price index from the prior year, but in no event will be increased more than 3.5%.

Beginning in 2004, the City will pre-fund this benefit with an amount to be determined by an actuary.

Each retiree will be required to submit proof of health insurance coverage to the City each year. The City will pay the reimbursement in a lump sum payment once per year.

13. GROUP LONG TERM CARE

Beginning April 1, 2004, the Association has the option to participate in a Group Long Term Care Plan (insurance company and plan to be determined).

Participation will be voluntary on an individual enrollment basis. Employees electing the plan shall authorize a tax payroll deduction to the program plan provider on a monthly basis for the incurred premiums. The plan will have no cost impact on the City.

14. NIGHT DIFFERENTIAL PAY

A. Night time differential of 5% for each hour or portion thereof worked between the hours of 6:00 P.M. and 8:00 A.M. of the following day shall be paid those regular, full time employees working on regular shifts, provided that at least two (2) or more of the hours worked fall within the night time differential period.

1) For those employees whose regularly scheduled shift is not the traditional 8:00 A.M. to 5:00 P.M., night time differential of 5% for each hour or portion thereof worked between the hours of 5:00 P.M. and 7:00 A.M. of the following day shall be paid, provided that at least two (2) or more of the hours worked fall within the night time differential period.

B. Represented employees who work a minimum of a full shift between the hours of 4:00 P.M. and 8:00 A.M. will be paid 5% night time differential commencing at 4:00 P.M. whether or not the hours worked are consecutive. If the employee does not work the full shift, the previous eligibility will prevail.

1) Represented employees who work a minimum of a full shift between the hours of 3:00 P.M. and 7:00 A.M. will be paid 5% night time differential commencing at 3:00 P.M. whether or not the hours worked are consecutive. If the employee does not work the full shift, the previous eligibility will prevail.

C. Represented employees who work overtime between the hours of 6:00 P.M. and 8:00 A.M. will be paid 5% night time differential for all overtime hours worked, providing that two (2) or more hours fall within the night time differential period, and will cover all overtime hours worked from 4:00 P.M.

1) Represented employees who work overtime between the hours of 5:00 P.M. and 7:00 A.M. will be paid 5% night time differential for all overtime hours worked, providing that two (2) or more hours fall within the night time differential period, and will cover all overtime hours worked from 3:00 P.M.

15. OUT OF CLASS PAY

Represented employees assigned to work temporarily in a higher classification than their own shall be paid at least 5% more than their prevailing salary or at the entrance step of the range of the higher classification, whichever compensation pattern is greater.

A. Such assignment will be paid for all actual time assigned to the higher classification, after a four (4) hour elimination period on the first day of said assignment.

B. If the out-of-class assignment lasts more than four (4) hours, out-of-class pay will begin with the first hour of the assignment.

C. For a continuing out-of-class assignment of less than four (4) hour increments that lasts more than four (4) hours, out-of-class pay will begin with the first hour of the assignment.

Any represented employee who is assigned to work out of class in an unclassified position will receive a 5% salary differential above his/her current salary or the salary established as 85% of Control Point for the unclassified position if such salary has been established, whichever compensation pattern is greater, provided that the requirements of (A), (B), and (C) above are satisfied.

To be eligible for out-of-class pay, the employee must be responsible for performing all duties of the higher classification that may be required during the period of the out-of-class assignment, and must be assigned to the out-of-class assignment in writing.

16. PREFERRED CTO/STRESS REDUCTION PROGRAM

A. For all represented employees the following steps will take place as a Stress Reduction Program:

1) Once each calendar quarter each represented employee may designate eight (8) hours of accrued Compensatory Time Off (CTO) as Preferred CTO to be taken in that calendar quarter.

2) If the employee does not exercise his/her option to designate and use eight (8) hours of preferred CTO in a calendar quarter, the option does not carry over into a subsequent calendar quarter.

3) The City will not unreasonably deny the use of such CTO provided that the employee has given at least 24-hour notice of the request to use that Preferred CTO. Denial of said request will be on the basis of the inability of the department to provide required services if such request were to be granted, except that the City may assign employees to work overtime to cover one employee's request. The City may, at its sole option, grant Preferred CTO use with less than 24-hour notice. Employees may not be called back from Preferred CTO for other than emergency conditions that cannot be covered with the use of assigned overtime.

17. OVERTIME

A. Represented employees assigned to work a 40 hour work week who work overtime are entitled to:

1) Time and one-half the employee's hourly rate for worked overtime excluding unpaid meal time for all hours worked beyond their regular daily or weekly work schedule.

2) Double time for all hours worked in excess of 12 consecutive hours of actual work excluding unpaid meal time.

B. Regular employees assigned to work less than a 40 hour week who work overtime are entitled to:

1) Straight time for worked overtime excluding unpaid meal time that results in less than forty (40) hours paid time in a workweek.

2) Time and one half the employee's hourly rate for worked overtime excluding unpaid meal time for all hours worked beyond the regular daily or weekly work schedule for that classification (usually 8 hour day and 40 hour week).

3) Double time for all hours worked in excess of 12 consecutive hours of actual work excluding unpaid meal time.

C. Represented employees who are assigned to provide staff support to established City boards and commissions are to be paid at the following rates for hours worked in a 24 hour period from 8:00 A.M. to 7:59 A.M. the following day:

1) Time and one-half the employee's hourly rate for the first four hours of overtime worked, excluding unpaid meal time.

2) Double time for all hours worked in excess of 4 actual hours of overtime worked, excluding unpaid meal time. Normally this will be after 12 hours of actual work except when an employee is working more than 8 hours as a regular shift.

D. Compensation for overtime hours worked, either pay or CTO, shall be at the discretion of the employee as long as the employee's CTO balance is below the maximum accrual set by the department and outside circumstances do not dictate the City pay the employee. If an employee's department has not set a CTO maximum accrual, the maximum accrual shall be 240 hours. It is the City's intention to enforce the CTO maximum accrual limit that applies to each employee. In lieu of receiving a CTO cash payout at retirement, the Employees' Association may vote to roll accrued CTO hours into the employee's VEBA account, subject to Association compliance with Federal rules associated with contributions of accrued time into a deferred medical expense account.

E. Represented employees shall not be called back from their lunch break to perform duties they would normally handle during their on-duty time. Should they be called back during their lunch break, they will be given an alternative time for their lunch break or be compensated for the call back time at the appropriate overtime rate.

This section is not intended to dilute the Department Head's right to modify an employee's work schedule with appropriate notice to avoid the overtime assignment.

18. INDUSTRIAL INJURY/CONTINUATION OF INSURANCE BENEFITS WHILE ON WORKERS' COMPENSATION

Workers authorized by the City's Workers' Compensation Administrator to undergo therapy or treatment due to an industrial injury, who are required to leave work, shall receive leave with pay, including reasonable travel time, providing the treatment falls within the normal working hours, is pre-scheduled and cannot be scheduled during non-work hours.

The City will continue payment toward health, dental and life insurance coverage for the employee and dependents up to the maximum amount allocated on the Salary Adjustment Form for an employee who is disabled from work because of a work related injury if the employee is no longer in a paid status sufficient to continue the coverage afforded under the terms of the program, subject to the following conditions:

A. The employee may not increase the existing coverage after the date of injury except to add children born within nine months of the injury.

B. Continuation toward payment of employee and dependent health/dental/life insurance coverage up to the maximum allocated on the Salary Adjustment Form is limited to one (1) year from the date of injury. Continuation toward payment of employee health/dental/life insurance coverage up to the maximum allocated under Total Compensation may be extended if the employee continues to be on temporary disability status for a Workers' Compensation injury.

C. The employee has supplemented his/her workers' compensation benefit with sick leave, vacation, CTO or other paid leave sufficient to qualify for payment of the health/dental/life insurance premium and is no longer entitled to any salary from the City.

19. FLEXTIME

The City will continue the practice of Flexible Work Schedules, as specified in City Manager's Directive #46.

20. RAINGEAR REIMBURSEMENT/UNIFORM ALLOWANCE

Employees working in the classifications set forth in Appendix A to this MOU are eligible to be reimbursed up to $110 each calendar year for the purchase of new raingear for work purposes. Any portion of the $110 provided for but not used in a particular calendar year may be rolled over and used (or lost) in the next calendar year. The employee must present the applicable Department Head with a receipt for the new raingear to qualify for the reimbursement.

During the term of this MOU, the parties will begin to meet and confer to discuss the subject of uniform allowance at least sixty (60) days before the City requires employees to begin wearing a uniform.

21. MILEAGE ALLOWANCE

Represented employees will be reimbursed for authorized use of a personal vehicle. The rate of reimbursement shall be the allowable standard deduction for mileage, which is permitted by the Internal Revenue Service in the filing of personal income tax returns.

This will exclude those employees guaranteed flat rate monthly mileage allowance.

22. AGENCY SHOP

A. The City (Employer) agrees that the Employees' Association (E.A.) shall remain the sole and exclusive agent for all the employees covered by this agreement in Units 5, 7 and 8, without regard to membership in the Association, with respect to all matters relating to hours, rates, terms and conditions of employment and all other bargainable issues. The Employer further agrees that it will not recognize or negotiate with any other person, association, group, committee or entity other than the E.A. with respect to such matters and will deal solely through the agency of and with the E.A. herein.

B. All employees who are members in good standing of the E.A. at the date of the signing of the contract and those employees who thereafter become members shall, as a condition of employment, remain members of the E.A. in good standing during the life of the agreement.

C. All employees in Units 5, 7 and 8, other than current employees as of January 1, 1986, within thirty (30) days of the date of their initial employment or the signing of the contract, whichever is later, shall be required to make payment of a cash sum as periodic dues to the E.A., if such employee is a member thereof; or, an equivalent sum, if not a member, as a charge for the services rendered and to be rendered hereunder by the E.A. as the exclusive bargaining agent, for the duration of the agreement. Permanent employees employed with the City as of December 31, 1985, have the option of joining the Association.

D. In the event an employee neglects, fails or refuses to comply with the terms of Sections B or C above, the employer hereby agrees, upon the request of the E.A., to discontinue the employment of any such employee. The E.A. agrees to give a delinquent employee ten (10) days' notice prior to seeking termination, and the City is obliged to terminate for failure to pay sums due and owing.

E. A dues check off or service fee check off provision will be made available by the Employer to any employee who voluntarily agrees and executes a written authorization to the Employer.

F. An employee who has conscientious objections to joining or financially supporting public employee organizations shall not be required to join or financially support any public employee organization as a condition of

employment. Such employee is required, in lieu of periodic dues and initiation fees, to pay Agency Shop Fees in sums equal to the Association's regular dues and initiation fees to a non-religious, non-labor charitable fund exempt from taxation under Section 501(c) (3) of the Internal Revenue Code, chosen by such employee and verified as being a qualifying organization by the Employees' Association.

G. The agency shop provision shall be rescinded by a majority vote of all the employees in the bargaining group covered by such memorandum of understanding, provided that: (1) a request for such a vote is supported by a petition containing the signatures of at least thirty (30) percent of the employees in the bargaining group; (2) such vote is by secret ballot; (3) such vote may be taken at any time during the term of such memorandum of understanding, but in no event shall there be more than one vote taken during such term.

H. Any employee who claims financial inability to pay dues (or in lieu Agency Shop fees) may request a waiver of this requirement by filing a petition with the E.A. If the E.A. finds that hardship exists, either a temporary or permanent waiver may be approved.

DEFINITION: For purposes of this Section, Agency Fee is defined as that portion of dues not attributable to social or political activities.

23. EMERGENCY PAID LEAVE POOL

A. ADMINISTRATION

Administration of this program shall be provided by a three (3) member Emergency Paid Leave Board (Board) consisting of two (2) members of the Association Board and the City Director of Human Resources (or designee). Determination of eligibility to use the vacation established in this Emergency Paid Leave pool will be by majority vote of this board. An adverse decision of this board may be appealed to the Association Board of Directors and their determination shall be final.

B. METHOD OF DONATION

1) Contribution of vacation or CTO will be computed at the member's base hourly rate of pay (excluding premium or specialty pay).

2) Contribution may be made from earned vacation, CTO or cash only. Conversion of Sick Leave to Vacation for purposes of donation to this pool will be immediately credited to the pool.

3) In a case where it has become known that an employee has been seriously injured or has a life-threatening illness and is in need of assistance from the Emergency Paid Leave Pool, contributions from accrued Sick Leave, bypassing vacation conversion, computed at the contributing employee's base hourly rate of pay (excluding premium or

specialty pay) may be made for the benefit of that specific employee who has the need.

4) Employee may authorize the City to automatically convert vacation that should be accrued to the employee to the pool when the employee's vacation accrual has reached the maximum allowed.

5) Funds contributed to the Emergency Paid Leave Pool will be placed in an interest bearing Trust Fund. The Trust Fund will be accumulated in total dollars. No record of number of hours contributed to the Pool will be maintained. An employee making a donation to the Pool will not have a vested right to the amount donated. The Finance Department will report the status of the fund on a calendar quarter basis to the Association.

6) Employees may contribute earned vacation, CTO or cash to the Emergency Paid Leave Pools of other City bargaining groups.

C. USE OF POOL

1) Employee must have a verified emergency need for time off to request Emergency Paid Leave from the pool. An employee's initial request to use leave from the Emergency Paid Leave Pool shall be made to the City's Director of Human Resources (or designee). The Director of Human Resources (or designee) shall make an initial determination regarding whether the employee's request to use Emergency Paid Leave is for a verified medical emergency. The Director of Human Resources (or designee) shall notify the rest of the Board of the name of the individual making the request, the date of the request and whether or not the individual's request qualified as a verified medical emergency need under this section. Medical emergencies for the employee or dependent shall be verified by a doctor's certification and shall include the anticipated duration of the medical emergency. Non-medical emergencies shall be verified by certification acceptable to the Board and shall include the anticipated duration of the emergency.

2) Employee must have exhausted appropriate paid leave (sick leave including eligible conversion to vacation, vacation or CTO) prior to becoming eligible to request Emergency Paid Leave benefits from the pool. Employee will be notified by the Human Resources Department when they first become eligible to request emergency leave benefits from the pool.

3) The maximum time available from the pool (subject to the assets of the pool) will be 160 hours (two [2] pay periods) for Emergency Paid Leave benefits due to the illness or injury of the employee or the maximum allowable accrual of vacation for emergency needs of the family of the employee.

4) An additional 160 hours (two pay periods) will be made available in extreme circumstances if an employee has a medical emergency. The

decision to grant or deny a request for an additional 160 hours will be made by a majority vote of the Employees' Association Board Members.

5) Emergency Paid Leave will be deducted from the pool based upon the employee's base hourly rate of pay (excluding premium or specialty pay).

6) Use of Emergency Paid Leave from the pool will be treated in the same manner as use of regular vacation. The employee will continue to accrue sick leave, vacation, insurance coverage and other benefits in the same manner as he/she would if using regularly credited vacation.

7) Emergency Paid Leave hours will be made available for use in the pay period following approval by the Association.

8) Emergency Paid Leave that has been credited to the employee and has not been used when the emergency has terminated will be reinstated to the pool. Vacation, sick leave and other benefits that have accrued to the employee will remain in the employee's account.

24. JURY DUTY

Represented employees required to report for jury duty shall be granted a leave of absence with pay from their assigned duties until released by the Court, provided the employee remits to the City all fees received from such duties and provided that the employee provides written proof from the Jury Commissioner for each day of jury duty which shows the time the employee has actually been present for assignment to jury duty. An employee who uses a private vehicle may keep any mileage fees. Employees who use City vehicles for travel to and from Court must remit jury and mileage fees to the City.

A. Swing shift personnel shall have release time on the day of Court attendance. Time spent in Court, including time spent traveling to and from Court, shall be considered as time worked and shall be deducted from the regular shift.

B. Graveyard shift personnel must be released from the shift prior to Court attendance. The time spent in Court, including time spent traveling to and from Court, shall be considered as time worked and shall be deducted from the regular shift. The balance of the shift will be offset by accrued vacation or CTO.

C. For departments with minimum staffing requirements, employees who have been released from work for Court appearance shall take the balance of their shift off as CTO or vacation. For departments without minimum staffing requirements, employees who are released from jury duty prior to the end of their regular shift shall have the option of requesting CTO or vacation for the remainder of their shift or of returning to work.

D. Employees who normally work a schedule which includes Saturday and/or Sunday as a part of their regular work schedule who are called to jury duty, and who request reassignment of their normal work schedule because of the

jury duty, will be assigned to a week-day (normally Monday through Friday) work schedule with their normal shift reporting times.

25. LIMITED/ALTERNATIVE DUTY

A. JOB RELATED ILLNESS OR INJURY

Employees who have a job related illness or injury which requires him/her to be off work under Workers' Compensation will be assigned to limited or alternative duty under the following condition:

Supervisors shall be advised of the medical condition of any industrial injury as soon as practical. Upon receipt of a Doctor's report which provides work limitations, the City may identify a regular or modified assignment for which the employee has the required experience and training to be eligible for assignment to. Such assignment may be based upon a 40 hour per week or less basis, if mutually agreed between the City and the employee.

Employees who have a job related illness or injury, which requires him/her to be off work under Workers' Compensation, or who do not qualify for limited or alternative duty, will be reassigned to a Monday through Friday work schedule to keep required medical or other workers' compensation commitments.

B. NON JOB RELATED ILLNESS, INJURY OR CONDITION

Employees who have a non job related illness, injury or condition that requires him/her to be off work may request to be assigned to limited or alternative duty. Nothing in these provisions is intended to imply that an employee has a right to a limited/alternative duty assignment, unless expressly provided by law. Such request will be accommodated unless no appropriate limited or alternative duty assignment is available under the following conditions:

1) Identification by the City of a regular or modified assignment for which the employee has the essential experience and training to be eligible for assignment to. Such assignment may be based upon a 40 hour per week or less basis, if mutually agreed between the City and the employee.

2) Upon a written release from his/her doctor, subject to review by the City doctor, which allows the employee to perform all of the duties of the contemplated assignment.

3) Employees may account for his/her regular work schedule through a combination of limited or alternative duty hours and sick leave or other paid leave sufficient to maintain eligibility for regular accrual of benefits.

C. Under both of these limited or alternative duty assignments employees will be required to work their regularly scheduled number of hours (normally forty (40) hours) per week, unless such assignment is modified by mutual

agreement between the City and the employee. It is recognized that performance of limited or alternative duty assignments will not be permitted to interfere with any medically related treatment designed to assist the employee to return to full, unrestricted duty in the earliest possible time frame.

All such assignments, and their duration, are temporary assignments and are subject to periodic sixty (60) day review of the employee's continued need for limited or alternative duty, the employee's continued ability to perform the limited or alternative duty and the department's ability to continue the employee in the assignment. All temporary assignments shall be at the employee's regular rate of pay.

In the event the Americans with Disabilities Act requires modification of the provisions of this section, it is agreed that the law will prevail.

26. AFFIRMATIVE RESPONSE TO EMERGENCY OVERTIME

It is the policy of the City of Santa Clara to avoid the necessity for overtime work whenever possible. The City recognizes, however, the obligation to provide services to the community and, on occasion, may require employees to extend work shifts or to be called back to work due to emergencies, personnel shortages, or required workloads. Employees contacted for overtime work have an obligation to affirmatively respond to this need unless incapacitated or due to extenuating circumstances beyond the control of the employee and reasonably acceptable to the City. Failure on the employee's part to affirmatively respond to such requests and/or to acceptably document such extenuating circumstances or incapacitation will be in violation of the City's rules and regulations and may be subject to formal disciplinary action. For purposes of this section, incapacitation commonly means that an employee is unable to respond to perform his/her duties because of his/her own sickness or injury, or because he/she does not feel capable of performing the duties of the assignment safely because of the ingestion of alcohol or other legal drugs or prescriptions. For purposes of this section, extenuating circumstances commonly means that an employee is unable to respond or perform his/her duties because of extraordinary circumstances such as being required to provide care for another person who is unable to care for him/herself, inability to obtain transportation to the work site, or an undue hardship that places the employee in a situation that he/she deems unsafe. In cases of extenuating circumstances, the employee is expected to notify his/her supervisor of the basis for the decision not to respond and a realistic time at which he/she will be able to report to work. Repeated instances where an employee is either incapacitated or has extenuating circumstances may be cause for the supervisor to review the situation and take appropriate corrective action.

27. LAY-OFF POLICY

A. The need for reduction in force shall be determined by the City Manager as a result of the resource allocation plan adopted by City Council. The determination to reduce the work force shall contain reasons for reduction and a listing of programs that are affected, and the specific City classifications and numbers within each classification that shall be reduced.

B. In the event the City demonstrates it is necessary to reduce the work force of represented employees, the City agrees to meet-and-consult with the Bargaining Group at least thirty (30) days prior to any layoff notifications to receive recommendations as to how best to accomplish this process with the least impact on represented employees, and to explore alternatives such as reductions in work hours, freezing of merit pay increases or similar programs which will result in reducing the City's labor costs.

C. If the City implements a reduction in work force, the City will administer the lay-off policy consistent with the following concepts:

1) ORDER

The order of lay-off shall be as follows:

a. Temporary (as-needed) employees.
b. Probationary employees.
c. Permanent employees in inverse order of seniority within the classification series being reduced.

2) SENIORITY

Seniority shall be determined by the length of current continuous, permanent service with the City regardless of classification in which employed. Continuous service shall be defined as that which has not been interrupted by separation of service from the City. Seniority shall be retained, but shall not accrue, during any period of authorized leave without pay (more than 5 days), except for military leave.

3) NOTICE

When the City determines that it must implement a reduction in work force, notice to the employee shall be in writing at least thirty (30) days prior to the effective date of the lay-off. The Bargaining Group shall also receive concurrent notification of lay-off. The notice of lay-off shall contain the following:

a. Reason for lay-off
b. Effective date of lay-off
c. Opportunity to discuss with a representative of management
d. Conditions governing re-employment
e. Information regarding Unemployment insurance

4) REASSIGNMENT (BUMPING)

Employees identified for lay-off shall have reassignment rights (bumping) to the same classification in a different department or division based or to a previously held classification in which the employee attained permanent status based upon seniority as defined in Section B above. Employees must exercise these rights by notifying Personnel, in writing, within seven (7) calendar days after receiving written notification of the lay off.

D. In the event of lay-off, any employee so affected may elect to:

1) Accept a position in a lateral or lower class in which he/she has permanent status, or a position in a lateral or lower class within the series containing the class from which the employee is being laid off, provided he/she is otherwise qualified and is more senior than the least senior employee in such lateral or lower class.

2) Accept a position in higher class, provided he/she has held permanent status in such higher class, and further provided that the employee's transfer from the higher class was voluntary and occurred during his/her current period of employment and provided he/she is otherwise qualified and is more senior than the least senior employee in such higher class.

3) Accept a vacant position in a lateral or lower class for which he/she is otherwise qualified.

4) Any employee entitled to an option noted above, which involves assignment to a lower classification, may elect to be placed on lay-off in lieu of accepting such assignment to the lower class. In the event the employee elects to be placed on lay-off, such employee will only be recalled to the classification from which the employee elected to be placed on lay-off. The decision to not accept assignment to a lower classification may adversely affect the employee's ability to collect unemployment insurance.

E. SEVERANCE PAY

1) Represented employees who are terminated from their positions in the City of Santa Clara Electric Utility Department or from their positions in the City's Meter Reader classifications, as a result of a buyout, merger, or takeover of the electric utility during the term of this MOU, and are offered no other position within the City, shall receive severance pay as follows. Such terminated employee(s) shall be compensated at the rate of forty (40) hours [one week's pay] for each year of service as a City of Santa Clara employee, to a maximum of six hundred forty (640) hours [sixteen (16) weeks].

F. RE-EMPLOYMENT/REINSTATEMENT LISTS

1) The names of regular or probationary employees laid-off according to this policy will be placed on a Re-employment List for each classification for which the employee is eligible in the inverse order of the lay-off. Individuals' names will be retained on a Re-employment List for classified positions for the shorter of either three (3) years from the effective date of lay-off or the date on which a laid off employee rejects an offer of re-employment in the classification from which the former employee was laid off. Employees whose names are on a Re-employment List for classified positions will be notified of other related openings for which testing is scheduled.

2) In the event an employee accepts reinstatement to a lower class than the one from which laid off, such person's name shall remain on the Re-employment List for reinstatement to the class from which laid off, lateral classes or other higher classes upon which his/her name appears provided such person, except for lack of seniority, would have been otherwise entitled to such lateral class at the time of the most recent lay-off. Laid off persons who are re-employed under this provision shall be re-instated with/to the same seniority, pay step and pay step anniversary date and leave accrual rates as at the time they were laid off. Employees whose names are on a Re-employment List for classified positions will be notified of other related openings for which testing is scheduled.

28. UNPAID TIME OFF

The Federal Family and Medical Leave Act and the California Family Rights Act shall prevail for any employee on personal or family medical leave.

Unpaid Time Off shall be granted under the following conditions:

A. The City Manager shall be authorized to grant up to one (1) year leave of absence without pay for medical or personal reasons or personal development.

B. Employees granted either such leave of absence will be returned to the same department and classification and the same salary range that would be in effect if they had not been on leave of absence, except that the leave time will not be included in length of service, upon resumption of their City employment.

29. PERMANENT PART-TIME EMPLOYEES' WORK HOURS

A. Represented permanent, part-time employees shall have priority over as-needed employees to request assignment to work hours assigned to full-time or permanent part-time positions which are within the employees' classification and which become available in that given department or division, to a maximum of 40 hours per week. In giving consideration to granting the request for additional work hours, the department head will take into consideration the employee's ability to work the hours requested without impact on his/her own regular work schedule and the employee's ability to perform the full range of duties required in the assignment. The determination of the need to assign personnel to fill temporary work hours is reserved to the department head.

B. NOTIFICATION OF TRANSFER OPPORTUNITIES

Permanent, part-time or full-time employees seeking to increase, reduce, or maintain their work hours shall be given notification and the opportunity to request a transfer to any open position in the City within that classification. A permanent, part-time employee's request to transfer to another position within the same classification will be given the same consideration as any other transfer candidate for the vacant position. Transfer candidates will be

evaluated, along with other qualified candidates, based on their ability to perform the full range of duties required in the assignment. The determination of the need to fill a vacant position is reserved to the City Manager.

30. STEP INCREASE EFFECTIVE DATE

The practice of awarding step increases the beginning of the pay period following the anniversary date of the employee is as follows:

A. Employees, who have an anniversary date that falls within the first week of the pay period and who have been approved for a step increase, will be adjusted on the beginning day of the pay period during which the anniversary date falls.

B. Employees, who have an anniversary date that falls within the second week of the pay period and who have been approved for a step increase, will be adjusted on the beginning day of the pay period immediately following the anniversary date.

31. REDUCED WORK WEEK/REDUCED PAY AND VOLUNTARY TIME OFF (VTO)

Employee participation in this plan is contingent upon the City's understanding and agreement that employee participation cannot be interpreted as anything other than a temporary and limited good faith effort being made by the employee to do his/her part to help ease the current budget crisis. This is not to be construed as a representation of employee commitment to a permanent program or an admission of any kind that the employee would not be harmed by such a plan becoming mandatory.

A. REDUCED WORK WEEK/REDUCED PAY

Employees may request a reduced work week schedule (32 hours per week instead of 40 hours per week, for example) at the same hourly rate of pay, subject to the following conditions:

1) With the approval of the Department Head and the City Manager, a binding work schedule as requested by the employee will be developed that may be modified only with the approval of both the City and the employee.

2) More than a 20% reduction of the workweek in a pay period will result in proportionate reduction of accrual of sick leave and vacation.

3) No reduction of insurance premium payment or refund as long as sufficient hours are worked to allow for full payment of the premium for an employee working a full time work schedule. If the number of hours worked is less than the number required for full payment of premiums or refunds, the premium or refund payments will be reduced in proportion to the hours required to gain full credit.

4) Impact on retirement and other benefits will be determined by the application of actual work hours and rates of pay required under each of those programs.

5) Overtime hours will be paid at the straight time rate for hours worked which is less than the employee's regular daily work schedule or 40 hours per week. Overtime hours worked in excess of the employee's regular daily work schedule or more than 40 hours per week will be at the appropriate overtime rate.

6) Cancellation of the employee's participation in the program will be by mutual agreement of the employee and the Department Head, with the approval of the City Manager.

B. VOLUNTARY TIME OFF

Employees may request voluntary unpaid time off under the following conditions:

1) Approval of a work schedule that does not adversely impact the operations of the department or other employees in the work unit with the approval of the Department Head and the City Manager.

2) No impact on either sick leave or vacation accrual if sufficient hours are worked in a pay period to entitle the employee to his/her regular accrual rate for either benefit.

3) No reduction of insurance premium payment or refund as long as sufficient hours are worked to allow for full payment of the premium for an employee working a full time work schedule. If the number of hours worked is less than the number required for full payment of premiums or refunds, the premium or refund payments will be reduced in proportion to the hours required to gain full credit.

4) Voluntary time off may be taken without the employee first using all of his/her accrued Compensatory Time Off (CTO).

5) Employee may cancel his/her participation in the program with a notice time agreed upon at the time of the granting of the request that will be sufficient to allow the department head to accommodate the request.

6) Cancellation of the employee's participation in the program will be at the discretion of the Department Head with the approval of the City Manager.

32. ADA STATEMENT

The City shall comply with the Americans with Disabilities Act.

33. FOOTWEAR REIMBURSEMENT

Employees who are required to wear steel toed safety shoes (or boots) will be

reimbursed an amount not to exceed $220 each calendar year (outside of total compensation) toward the purchase or repair of steel toed safety shoes (or boots). Employees who are required to wear steel toed safety shoes (or boots) are subject to disciplinary action if they do not have them available at the work site.

Meter readers are required to wear walking shoes while checking meters. The City will reimburse meter readers in an amount not to exceed $110 each calendar year (outside of total compensation) toward the purchase of walking shoes.

The City will continue the current policy to provide safety and/or protective equipment and/or clothing for use by the employee while performing his/her normal duties or during inclement weather or in other occasional special assignments or conditions.

34. BILINGUAL PAY

A represented employee shall be entitled to receive, in addition to the employee's regular compensation, forty-nine dollars and fifty cents ($49.50) per bi-weekly pay period for bilingual skills if the employee meets the following criteria:

- Certification from the City, by oral examination, that the employee possesses the needed language skills.
- A decision by the applicable Department Head that there is a significant need or benefit, on a regular basis, to having the employee certified in a particular language other than English.
- Certifications required and obtained above will not necessarily follow an employee if transferred or promoted.

35. REST PERIOD FOLLOWING EMERGENCY WORK

Any employee working eight (8) or more hours at the overtime rate during the fifteen (15) hour period immediately preceding the beginning of his/her regular work shift shall be entitled to a rest period of eight (8) consecutive hours on the completion of such overtime work with the following provisions:

A. No employee shall be required to work in excess of sixteen (16) hours without rest unless an emergency is investigated and continued work is deemed necessary to prevent extreme property damage or to preserve human life.

B. If the eight (8) hour rest period overlaps his/her regular work shift in whole or in part, he/she will be paid at the straight-time rate for the time that falls within his/her regular work shift.

C. If the eight (8) hour rest period overlaps a portion of the first half of his/her work shift, the employee may be excused from work until the beginning of the second half of said shift. If the eight (8) hour rest period overlaps a portion of the second half of his/her work shift, he/she may be excused from work until

the following work shift. He/she will be paid, however, for that portion of the rest period that overlaps his/her normal working shift. He/she will not be paid for the time between expiration of the rest period and his/her reporting for work.

D. Hours worked prior to an eight (8) hour rest period shall not be included in determining another rest period.

E. If the employee is called back to work during his/her eight (8) hour rest period, a new rest period will commence at the conclusion of such work.

F. Any employee who works a minimum of three (3) hours of emergency overtime between the hours of 11:00 p.m. and 6:00 a.m. will receive an eight (8) hour rest period commencing at the time of release from duty.

G. Notwithstanding the foregoing, if the employee is required to work during regular work hours on a work shift without having had a rest period of eight (8) hours, for which he/she has qualified as set forth above, he/she shall be paid at the overtime rate for all work performed until he/she has been released from duty for at least eight (8) hours.

36. ALTERNATE WORK SCHEDULE (NINE-EIGHTY SCHEDULE)

An employee, subject to the conditions of the employee's job assignment, may propose an alternate work schedule as described in City Manager's Directive #71. A proposal for alternate work schedule, and the establishment or discontinuance of an alternate work schedule is not subject to any grievance procedure.

37. DOMESTIC PARTNERS

The City shall make all benefit programs available to employees, dependents and domestic partners, subject to the requirements of each benefit provider.

38. PAY PERIODS

Allowances/payments or accrual rates that are an agreed upon amount per month or year but are paid for administrative purposes in incremental amounts each pay period, shall be the same total amount per year in years in which there are 27 pay periods instead of 26 pay periods. This clarification is not intended to and would not modify anyone's salary/rate of pay.

39. FLEXIBLE SPENDING PLAN, INTERNAL REVENUE CODE, SECTION 125

The City will make available a Flexible Spending Plan under the Internal Revenue Code Section 125 for employees. Employees may contribute pre-tax (federal, state, FICA, Medicare) dollars for dependent care and qualified unreimbursed medical expenses. This Plan will follow the regulations outlined by the Internal Revenue Code. Detailed information will be available in the Summary Plan Document.

The City will pay the administrative expenses for the plan. This Plan is voluntary and participating employees will pay the monthly participation cost. The monthly participation cost will be considered pre-tax, as defined above, under Internal Revenue Code Section 106. Participating employees will be provided with an Employee Plan Summary and regular statements regarding the status of their flexible spending accounts.

40. EMPLOYEE ASSISTANCE PROGRAM

The City agrees to provide a confidential Employee Assistance Program to be funded outside of the Salary Adjustment Form.

41. ASSOCIATION RELEASE TIME

The City agrees to provide release time each month of one hour plus reasonable travel time to SCEA Board members to attend monthly Association meetings. Board members agree to notify the applicable managers at least one week prior to the monthly Board meeting, and shall be permitted this release time except for a good cause business-related reason, set forth in writing by the applicable supervisor/manager. SCEA will provide a list of current Board members to Human Resources, as well as updates to Human Resources regarding any changes in Board members. This agreement is without prejudice to Employees' Association officers and/or Board members requesting release time when appropriate in their role as representatives of Association employees in meetings with City management such as meet and confer, grievance and discipline related meetings.

42. ASSOCIATION PROBLEM SOLVING COMMITTEE

The parties agree that regular meetings to explore mutual problems will be beneficial to the relationship between the City and the Association. Accordingly, an Association/Management Problem-Solving Committee is hereby created to discuss issues concerning the rights or policies impacting either party, or the relationship between the City and the Association, or the City and/or the employees the Association represents. The purpose of the meetings is to exchange information and solve problems. The parties agree that such meeting shall not be formal meet and confer or negotiations.

43. NEGOTIATIONS PREPARATION

Members of the Employees' Associations negotiating team shall have the right to be released from work duties with pay for a reasonable amount of time in conjunction with and before or after Meet and Confer sessions with the City for the purpose of negotiations preparations.

44. NEXT MEMORANDUM OF UNDERSTANDING

The City and the Employees' Association will exchange their proposals for the subsequent Memorandum of Understanding not later than August 26, 2015.

45. EMPLOYEE RIGHTS

All rights, privileges and working conditions enjoyed by the classifications represented herein, as defined in Personnel and Salary Resolutions No. 4652, dated May, 1983, and City of Santa Clara Resolution No. 2979, entitled "Employer-Employee Relations" dated December, 1972, and other City resolutions, if any, dealing with employee rights and benefits shall not be reduced during the term of this Memorandum of Understanding except in accordance with the provisions of this Memorandum of Understanding.

For the duration of this Memorandum of Understanding, except as provided herein, the wage and fringe benefits provided members of the Employees' Association shall not be reduced except by mutual agreement between the Management of the City of Santa Clara and representatives of the Association.

46. MANAGEMENT RIGHTS

Subject to State law and the provisions of City of Santa Clara Employer-Employee Relations Resolution, the rights of the City through its Council and Management include, but are not limited to: the exclusive right to determine the mission of its constituent departments, commissions and boards; set standards of service; determine the procedures and standards of selection for employment and promotion; establish and enforce dress and grooming standards; direct its employees; determine the methods and means to relieve its employees from duty because of lack of work or other legitimate reasons; maintain the efficiency of governmental operations; determine the methods, means and personnel by which government operations are to be conducted; determine the content and intent of job classifications; determine methods of financing; determine style and/or types of City-issued wearing apparel, equipment or technology to be used; determine and/or change the facilities, methods, technology, means, organizational structure and size and composition of the work force and allocate and assign work by which the City operations are to be conducted; determine and change the number of locations, relocations and types of operations, processes and materials to be used in carrying out all City functions including, but not limited to, the right to contract for or subcontract any work or operation of the City; to assign work to and schedule employees in accordance with requirements as determined by the City including but not limited to: establish and change work schedules and assignments upon reasonable notice; establish and modify productivity and performance programs and standards; discharge, suspend, demote, reprimand, withhold salary increases and benefits, or otherwise discipline employees for cause; establish and modify probationary periods and reasonable employee performance standards including, but not limited to, quality, and quantity standards; and to require compliance therewith; take all necessary actions to carry out its mission in emergencies; and exercise complete control and discretion over its organization and the technology of performing its work.

The City Council on its own behalf and on behalf of the City hereby retains and reserves unto itself all rights, power, authority, duty, responsibility and obligations conferred on and vested in it by the laws and Constitutions of the State of California and the United States of America. The exercise of such rights, power,

authority, duty, responsibility and obligations by the City Council and the adoption of such rules, regulations, policies as are necessary and as they apply to employees represented by the Association shall be in accord with this Memorandum of Understanding to the extent that they do not violate any of the reserved duties, responsibilities and obligations conferred on and vested in it by the laws, Charter of the City, Constitutions of the State of California, and the United States of America.

47. SCOPE OF THIS MEMORANDUM OF UNDERSTANDING

The parties acknowledge that during the meetings which preceded this Memorandum of Understanding, each had the unlimited right and opportunity to make demands and proposals with respect to any subject or matter and that the understandings and agreements arrived at by the parties after the exercise of that right and opportunity are set forth in this Memorandum of Understanding. Therefore, for the life of this Memorandum of Understanding, the City and the Employees' Association voluntarily and unqualifiedly waive the rights and each agrees that the other shall not be obligated to meet and confer with respect to any subject or matter not referred to or covered in this Memorandum of Understanding, even though such subjects or matters may not have been within the knowledge or contemplation of either or both parties at the time they met and signed this Memorandum of Understanding.

Notwithstanding the foregoing, however, in the event any portion of this Memorandum of Understanding is declared null and void by superseding Federal, State or City law, the balance of this Memorandum of Understanding shall continue in full force and effect, and the parties shall immediately commence the meet and confer process to ensure that the superseded portions shall be rewritten to conform as nearly as possible to the original intent.

The City further reserves the right to consider required organizational and operational changes in the economical and efficient operation of the Departments whenever existing or future statutes bring about additional monetary costs.

Nothing in the foregoing shall prevent the parties to this agreement from meeting-and-conferring during the term of this Memorandum of Understanding in matters of mutual concern. Such meeting-and-conferring shall be established and continued by mutual consent only. If, after meeting-and-conferring between the management representatives and the majority employee representatives, no agreement has been reached, such items under discussion shall remain unchanged.

48. PERSONNEL AND SALARY RESOLUTION

The City and the Employees' Association agree that they will continue to meet and confer on proposed changes in the Personnel and Salary Resolution that affect wages, hours, and terms and conditions of employment, and meet and consult regarding all other proposed changes to the Resolution after the parties ratify and adopt this MOU.

APPENDIX A

Assistant Sanitary Sewer Superintendent
Assistant Water Superintendent
Automotive Services Utility Worker
Automotive Foreman/Forewoman
Building Inspector
Code Enforcement Technician
Housing Inspector
Landscape Foreman/Forewoman
Meter Reader
Park Foreman/Forewoman
Public Works Inspector
Purchasing Utility Worker
Solid Waste Foreman/Forewoman
Senior Inspector
Utility Crew Supervisor
Utility Field Services Supervisor
Utility Field Services Worker
Water and Meter Service Supervisor

FOR THE CITY OF SANTA CLARA

Edward Kreisberg
mDate: 6/12/14

Elizabeth C. Brown
Date: 5-20-14

Vanessa Guerra
Date: 5-7-14

FOR THE CITY OF SANTA CLARA EMPLOYEES' ASSOCIATION

Voula Brown
Date: 5/28/14

Jon Miller
Date: 28 MAY 14

Jim McGinley
Date: 5-28-14

Stephanie Gutowski
Date: 6/9/14

Pam Robles
Date: 5-28-14

Leslie Brown
Date: 5/28/14

APPROVED: _____ _____
JULIO J. FUENTES Date
City Manager

APPROVED BY THE CITY COUNCIL ON: December 17, 2013

ATTEST: _____ _____
RODNEY DIRIDON, JR. Date
City Clerk

SIDE LETTER BETWEEN
THE CITY OF SANTA CLARA AND
SANTA CLARA EMPLOYEES ASSOCIATION (UNITS 5, 7 & 8)

The City and Santa Clara Employees' Association have met and conferred regarding the Sick Leave Cash-Out provision contained in Section 22 of the Personnel and Salary Resolution.

The City and Employees Association agree that employees hired in the future into Units 5, 7 or 8 and/or represented by the Employees Association shall be eligible for a lesser maximum cash-out of sick leave than is set forth in the Personnel and Salary Resolution as of December 17, 2013 and that is applicable to current Units 5, 7 and 8 employees. However, this Side Letter agreement shall only apply and take effect if and when the City reached an agreement (or imposed) a reduction in sick leave cash-out for all other bargaining units, and would only apply to persons hired into the Employees Association represented bargaining units after the change was in effect for all other bargaining units.

And, with respect to the specific amount of sick leave cash-out for which future hires would be eligible, the sick leave cash-out provision for new hires in another bargaining unit most beneficial to employees would apply to the Units 5, 7 and 8 new hires if there was a variation in the amount of reduced sick leave cash-out available to future hires among the other City bargaining units.

Elizabeth Brown, City of Santa Clara
Director of Human Resources
Dated: 5/30/14

Voula Brown
President, Employees Association
Dated: 5/28/14

Edward L. Kreisberg, Meyers Nave
City's Lead Negotiator
Dated: 6/12/14

Meeting Date: 7/1/14

AGENDA REPORT

City of Santa Clara, California

Agenda Item # 6B-7

Date: June 17, 2014

To: City Manager for Council Action

From: Director of Electric Utility

Subject: Approval of a Call Agreement with Portland Energy Conservation, Inc. and Call No. 14-1 for Professional Services for Small Data Center Market Characterization Study Implementation

EXECUTIVE SUMMARY:

In accordance with Public Utilities Code (PUC) Section 385 covering Public Benefits Charge, and with the City's Public Benefits Program Policy Statement adopted by Council on May 12, 1998, Silicon Valley Power (SVP) staff has developed a wide range of cost-effective energy efficiency and renewable energy programs for customers. State law requires that the utility spend a minimum of 2.85% of retail revenue on these programs, in order to encourage customer investments by reducing the payback period in these areas.

Previously, Silicon Valley Power has offered two pilot programs to serve the hard-to-reach small data center market sector. A larger effort in collaboration with other utility programs, including PG&E and the Northwest Energy Efficiency Alliance, has been undertaken to develop a Small Data Center Market Characterization Study. SVP is a participant in this effort and will fund the implementation of two projects as a result of this study. Both projects will be located within the City of Santa Clara and could result in the development of an expanded program under SVP's Public Benefits Program portfolio. Staff proposes to enter a Call Agreement and Call No. 14-1 to provide an assessment of the energy savings opportunities, reports, project management service during implementation, financial incentives for energy reductions, and savings verification services for the two participants. A copy of the Call Agreement and Call No. 14-1 can be viewed on the City's website or is available in the City Clerk's Office for review during normal business hours.

ADVANTAGES AND DISADVANTAGES OF ISSUE:

The market characterization study is intended to identify ways to motivate customers who operate small data centers within their existing facilities and help them install energy efficiency measures. SVP's portion of the funding will follow the study and provide funding for implementation at two facilities located within the City of Santa Clara. Significant savings can be found in data centers; therefore customers who participate in this project will use energy more efficiently. Lessons learned from this effort will then be used to develop a small data center program for SVP's Public Benefits Program portfolio. This program helps to achieve that requirement

ECONOMIC/FISCAL IMPACT:

Call No. 14-1 shall not exceed $34,898.00. Sufficient funds are available in the Electric Department Contractual Services/Not Classified account, 191-1312-87870-[I])9697-[A]94100.

RECOMMENDATION:

That Council approve, and authorize the City Manager to execute, a Call Agreement with Portland Energy Conservation, Inc. and Call No. 14-1 for Professional Services, in an amount not to exceed $34,898.00, for Small Data Center Market Characterization Study Implementation.

Joe John C. Roukema
Director of Electric Utility

Certified as to Availability of Funds: AF
191-1312-87870 $ 34,898.00

Gary Ameling
Director of Finance/Assistant City Manager

APPROVED:

Julio J. Fuentes
City Manager

MAJORITY VOTE OF COUNCIL

Documents Related to this Report:

1) ***Call Agreement with Portland Energy Conservation, Inc.***
2) ***Call No. 14-1 for Professional Services with Portland Energy Conservation, Inc.***

CALL AGREEMENT BY AND BETWEEN THE CITY OF SANTA CLARA, CALIFORNIA AND PORTLAND ENERGY CONSERVATION, INC. for Third Party Energy Efficiency Services

PREAMBLE

This call agreement ("Agreement") is made and entered into in the City of Santa Clara, California, on this ____ day of _____2014 ("Effective Date"), by and between the City of Santa Clara, California, a chartered California municipal corporation, with its principal place of business located at 1500 Warburton Avenue, Santa Clara, California 95050 ("City") and Portland Energy Conservation, Inc., an Oregon nonprofit corporation, with its principal place of business located at 100 SW Main Street, Suite 1600, Portland, Oregon 97204 ("Contractor"). City and Contractor may be referred to herein individually as a "Party" or collectively as the "Parties" or the "Parties to this Agreement."

RECITALS

Whereas:

A. Contractor agrees to provide certain professional services to City on an on-call basis;

B. Contractor has the ability and desire to provide the quality and type of professional services which meet the objectives and requirements of City as set forth in this Agreement; and,

C. The Parties have specified in this Agreement the terms and conditions under which such services will be provided to and paid for by the City.

In consideration for the mutual promises contained in this Agreement, the Parties agree as follows:

AGREEMENT PROVISIONS

1. SCOPE OF SERVICES

1.1 To the extent possible, the professional services to be provided under this Agreement shall be performed in the City of Santa Clara and the services shall be described in detail by the Contractor and submitted in a written proposal to the City ("Services"). The Contractor's final proposal will be included as an exhibit entitled, "Scope of Services" attached to a subsequent agreement between the Parties referred to in this Agreement as a "Call" or a "Call for Services." Each Call will incorporate the terms of this Agreement by reference and must be signed by both Parties. Contractor agrees to provide professional services to the City as specified in each respective Call, to the extent funds have been authorized by the City.

1.2 No Services shall be performed or paid for under this Agreement except as specifically set forth and required in a written Call. No compensation may be sought under this Agreement for work performed prior to the issuance of a Call or for work to be performed or paid for under another contract. No compensation shall be paid in excess of the maximum dollar amount indicated in each respective Call for Services.

1.3 The Parties acknowledge that on the Effective Date of this Agreement, they are unaware of the details of all of the services which may be needed by City or provided by Contractor during the term of this Agreement. The Parties intend to specify the details and value of such Services in a subsequent Call, if any. This Agreement does not require that any Call(s) be signed. The Parties intend to provide the details of the contractual relationship between the Parties in this Agreement, so that by incorporating the terms of this Agreement in the Call(s), the Call may be brief and address the specific Services to be provided, the details of the time when the Services are to be provided and the schedule and amount the Contractor is to be paid for such Services.

2. PAYMENT

2.1 **Not to Exceed Maximum Amount.** The total amount billed to, and paid by, City for Services provided and authorized expenses incurred under a Call shall not exceed the maximum dollar amount specified in the Call. Contractor shall complete all Services contained within the scope of a Call regardless of whether the not to exceed amount has been reached, at no extra charge to the City. However, Contractor shall not perform any Services outside the scope of the Call without prior written authorization when the amount billed for under a Call exceeds the maximum dollar authorized amounts in the Call.

2.2 **Monthly Invoices.** Unless provided otherwise in a particular Call, payment to Contractor shall be in accordance with the procedures in this paragraph 2.2 and in paragraph 2.3. On a monthly basis, Contractor shall prepare an invoice which includes an itemization of all time spent based on the percent of Services complete, as well as any Authorized Expenses incurred (i.e., Out-of-Pocket Costs, Sub-contracted Services and/or Extraordinary Expenses).

2.2.1 If a particular Call directs that an invoice be presented in a format of a time sheet rather than as a percentage of Services completed, the itemization on each monthly invoice shall set forth the amount of time (recorded in quarter hours), the name of the employee performing the task and a description of each task performed. After setting forth the time spent on a daily basis, the itemization will provide a summary, at its end, of the total hours spent by each employee for the month, the hourly rate charged for that employee, and the total value of the service rendered by that employee for the month. The amount billed for Services shall then be determined by adding the value for the Services rendered by each employee for that particular month.

2.2.2 All monthly invoices shall also include a written itemization of the Authorized Expenses incurred, if any, with a detail listing the cost and source of such expenses and when they were incurred.

2.2.3 Contractor shall maintain documentation of such time and costs for City inspection for a period of three (3) years from the date of termination of this Agreement.

2.2.4 Within thirty (30) days of receipt of an itemized written invoice from the Contractor, City shall pay Contractor the amount billed for Services performed and authorized costs incurred under the Call during that billing period.

2.3 **Authorized Expenses.** The amount billed for Services shall be determined as set forth in paragraph 2.2 above plus the following amounts, if allowed under the Call:

2.3.1 **"Out-of-Pocket Costs".** Contractor's Out-of-Pocket Costs are those expenditures made by Contractor, other than employees' salaries and payment for Services of retained specialists, which are directly chargeable to the Services performed and which would not otherwise have been incurred by Contractor. Unless otherwise provided, the Out-of-Pocket Costs must be approved in writing in advance by City and may be billed to the City and reimbursed to the Contractor only as specifically authorized and set forth in each respective Call. Authorized Out-of-Pocket Costs shall be billed without additional markup or administrative charge;

2.3.2 **Per Diem.** A Call will state whether or not it includes an estimate for anticipated travel expenses. If the Call does not include an estimate for anticipated travel, then the provisions of this paragraph shall apply. A Party's travel expenses include airfare, rental car, or mileage, lodging and meals. The Party who is receiving the services pursuant to a particular Call, is the Reimbursing Party. Prior to incurring any charge for travel, the Party planning to travel ("Traveling Party") shall (1) confirm that the Reimbursing Party is available for meetings on the proposed dates and (2) provide (either verbally or by facsimile) a price quote to the Reimbursing Party for the anticipated airfare prior to the charge being incurred, the Reimbursing Party shall either verbally or by facsimile confirm that the airfare may be incurred; in the event that the Reimbursing Party verbally confirms that the airfare may be incurred, the Traveling Party *shall* confirm in writing (prior to incurring the charge) that the Reimbursing Party has agreed to the charge. All travel expenses shall be reimbursed at cost, with no mark-up. Hotel rooms shall not exceed a cost of $125 per night unless otherwise agreed by Reimbursing Party. Airfare and car rentals shall be reimbursed at economy class, unless economy class is unavailable through no fault of the booking party. Mileage, if applicable, shall be reimbursed in accordance with the current IRS guidelines for mileage reimbursement. Reasonable attempts shall be made to

make plane reservations in advance in order to take advantage of lower fares. In the event that travel plans must be canceled or re-scheduled due to the fault of the Reimbursing Party, then the Reimbursing Party shall pay for any costs associated therewith; if the travel is canceled or re-scheduled due to the fault of the Traveling Party, then the Traveling Party shall bear the expense. Invoices for travel expenses shall be supported by receipts, and shall be reimbursed in accordance with paragraph 2.2.1. Meals, if reimbursed, shall not exceed fifty dollars ($50) per day.

2.3.3 **Any authorized "Sub-contracted Services" incurred by Contractor**. Authorized Sub-contracted Services are services provided by a retained specialist or sub-contractor and may be billed to City only if specifically described and authorized in a Call. (Retained specialists and sub-contractors shall include individuals or organizations offering qualified special services to City who are particularly skilled in one or more fields and who may be occasionally employed by the Contractor to fill the need for special or unusual services. Unless otherwise provided, the cost of furnishing such special services must be approved in writing in advance by City and the costs billed to City and reimbursed to the Contractor shall be only the actual charges of the retained specialist or sub-contractor, without additional markup or administrative charge); and\or,

2.3.4 **Any other authorized "Extraordinary Expenses" incurred, if any, as set forth in the Call**. Authorized Extraordinary Expenses shall be billed without additional markup or administrative charge.

2.4 **Retainer or Flat Fee for Services**. The Parties to this Agreement may, from time to time, determine that payment for a certain Scope of Services set forth in a Call pursuant to this Agreement should be made to Contractor on a retainer or flat fee for Services basis ("Stipulated Fee"). If the Parties so agree, then the provisions of this paragraph and the provisions of paragraph 2.2.1 shall apply, unless the Call provides otherwise. The Call shall set forth the maximum monthly or annual fee agreed to by the Parties as it relates to any Agency Fee or to any Out-of-Pocket Costs, and Contractor shall not exceed the amount(s) agreed to without written approval of City. The maximum Agency Fee agreed upon by the Parties is deemed to fully compensate Contractor for all work necessary for Contractor to complete the Scope of Work set forth in a Call.

3. RIGHT OF CITY TO INSPECT RECORDS OF CONTRACTOR

City, through its authorized employees, representatives, or agents shall have the right during the term of this Agreement, and for three (3) years from the date of final payment under this Agreement, to audit Contractor's books and records for the purpose of verifying any and all charges made by Contractor in connection with Contractor's compensation under Calls made pursuant to this Agreement, including termination of Contractor's Services. Contractor agrees to maintain sufficient books and records in accordance with generally accepted

accounting principles to establish the correctness of all charges submitted to City. Any expense not so recorded shall be disallowed to Contractor.

4. PROSECUTION OF WORK

Contractor shall perform the Services required under this Agreement and the Call(s) made pursuant to it in an efficient and expeditious manner. Contractor shall commence work on the Effective Date specified in the applicable Call. Contractor is responsible for any delays caused by Contractor, its agents or subcontractors, or caused by factors directly or indirectly under its control. No extension of time for performance shall be given for such delays.

5. QUALIFICATIONS OF CONTRACTOR; STANDARD OF WORKMANSHIP

Contractor represents that it has sufficient qualified personnel to furnish the Services described under this Agreement and that the Services will be furnished in accordance with generally accepted professional standards and practices in the industry.

The work furnished to the City pursuant to any of the Calls under this Agreement shall be of a quality acceptable to the City. The criteria for acceptance of the work provided under this Agreement shall be a product of neat appearance, well-organized, technically and grammatically correct. The minimum standard of appearance, organization and content of the documents shall be that used by the City for similar projects.

6. SUSPENSION OR TERMINATION

City may suspend or terminate this Agreement or any or all work covered under any Call under this Agreement at any time upon thirty (30) days' prior written notice. Contractor may terminate this Agreement as set forth in paragraph 6.4. Said termination or suspension shall be effective as of the thirtieth day after the date of the notice ("Effective Date of Termination"). This Agreement, and any portion of the Scope of Services described in any Call including but not limited to any specific task, project, study, advertisement or campaign, may be terminated by the City upon written notice delivered personally or by registered mail or equivalent mail or delivery service which provides for an office signature of receipt. With regard to termination of any portion of the Scope or any specific task, termination will be effective immediately, unless economic or practical considerations result in the Parties mutually agreeing to a specific termination date.

6.1 If such termination is due to the fault of Contractor, and if City agrees to make payment for all work and Services satisfactorily rendered up to the Effective Date of Termination, payment will be made within thirty (30) days of receipt of a statement for work and Services performed. Contractor shall immediately take proper steps to effect City's instructions, canceling any commitments previously authorized by City, if City so requires. City may deduct from such payment the amount of actual damage, if any, sustained by City by virtue of the failure to perform the Services or for breach of this Agreement by Contractor.

6.2 If such termination is not due to the fault of Contractor, then City agrees to make payment for all work and Services rendered up to the Effective Date of Termination within thirty (30) days from receipt of a statement for work and Services performed. Contractor shall immediately take proper steps to effect City's instructions, canceling any commitments previously authorized by City, if City so requires. City shall reimburse Contractor for any costs, expenses or service charges incurred by Contractor as a result of canceling previously authorized outsourced services.

6.3 Upon termination of this Agreement, Contractor shall transfer, assign and make available to City or City's representative, all property and materials in Contractor's possession belonging to and paid for by City.

6.4 Contractor may suspend or terminate this Agreement upon completion of work on all outstanding Call(s). Contractor may terminate work under a particular Call if the City is in default of the terms of this Agreement or any Call.

7. AVAILABILITY OF FUNDS

City represents that adequate funds will be available to make payments for Services received as required by each Call.

8. CONTRACTOR IS AN INDEPENDENT CONTRACTOR

In performing work under this Agreement, Contractor is not an agent or employee of City, but is an independent contractor for professional Services with full rights to manage its employees subject to the requirements of the law. All persons employed by Contractor in connection with this Agreement will be employees of Contractor and not employees of City in any respect.

9. AMENDMENTS

No alteration or variation of the terms of this Agreement shall be valid unless made in writing and signed by the Parties.

10. HOLD HARMLESS/INDEMNIFICATION

To the extent permitted by law, Contractor agrees to protect, defend, hold harmless and indemnify City, its City Council, commissioners, officers, employees, volunteers and agents from and against any claim, injury, liability, loss, cost and/or expense or damage ("Claim"), including all costs and reasonable attorney's fees in providing a defense to any such Claim which arises from Contractor's acts, errors or omissions with respect to, or in any way connected with, the prosecution of the work performed by Contractor pursuant to this Agreement.

11. TERM OF AGREEMENT

Unless otherwise set forth in this Agreement or unless this paragraph is subsequently modified by a written amendment to this Agreement, the term of this Agreement shall be three (3) years, beginning on the Effective Date and terminating three years later. However, this Agreement shall be deemed extended for such time as is necessary for Contractor to complete work on any Call which is issued prior to the termination date of this Agreement, but is still in progress on the termination date of this Agreement. Any incomplete Call(s) which have been issued pursuant to the terms of a previous agreement between the Parties is/are hereby reaffirmed and each such Call shall remain in full force and effect under this Agreement, subject to the terms of such Call.

12. INSURANCE REQUIREMENTS

During the term of this Agreement, and for any period following the termination date as set forth in this Agreement, Contractor shall purchase and maintain in full force and effect the following insurance policies:

12.1 commercial general liability (including bodily injury and property damage);

12.2 business automobile liability insurance;

12.3 worker's compensation employer's liability; and

12.4 if applicable, professional liability insurance.

Said policies shall be maintained with respect to employees and vehicles assigned to the performance of work under this Agreement with coverage amounts and with the required endorsements, certificates of insurance and coverage verifications as defined in Exhibit C, attached and incorporated by this reference. Contractor shall make its best effort to secure, and thereafter maintain in effect, such insurance policies. In the event that any required insurance policy expires or is terminated for any reason, Contractor agrees to replace the policy prior to any lapse in coverage. In the event any policy required under this Agreement is allowed to lapse, City may, in its sole discretion, elect to purchase the required insurance policy and the cost of such policy shall be charged to Contractor or withheld from the payments due to Contractor from City under this Agreement.

CONTRACTOR AGREES THAT, PRIOR TO EXECUTION OF THIS AGREEMENT, CONTRACTOR SHALL PROVIDE ITS INSURANCE BROKER WITH A COPY OF THIS PAGE OF THE AGREEMENT AS WELL AS WITH A COMPLETE COPY OF EXHIBIT C, AND WILL OBTAIN ASSURANCE FROM ITS CARRIER THAT ITS INSURANCE CARRIER WILL PROVIDE: (1) THE EXACT COVERAGES IN THE REQUIRED DOLLAR AMOUNTS STATED THEREIN, (2) AN ENDORSEMENT NAMING THE CITY OF SANTA CLARA, ITS COUNCIL, EMPLOYEES AND OFFICERS AS ADDITIONAL INSUREDS ON THE CGL AND BAL, AND (3) AN ACCORD EXPLICITLY STATING THAT "THE CITY OF SANTA CLARA, ITS

COUNCIL, EMPLOYEES, AND OFFICERS ARE HEREBY ADDED AS ADDITIONAL INSUREDS IN RESPECT TO ALL LIABILITIES ARISING OUT OF CONTRACTOR'S PERFORMANCE OF WORK UNDER THIS AGREEMENT" AS REQUIRED BY PARAGRAPH 2 OF EXHIBIT C.

13. OWNERSHIP OF DATA AND INFORMATION

City shall own any written reports or other items deemed deliverables by the respective Call, as well as any documents, data or other information supplied by City to Contractor during the course of this Agreement. Contractor shall deliver said data and information to City whenever requested to do so, but in any event within thirty (30) calendar days of the completion of the task. All material, including information developed on computer(s), which shall include, but not be limited to, data, artwork, sketches, tracings, drawings, plans, diagrams, quantities, estimates, specifications, proposals, tests, maps, calculations, photographs, reports, advertisements, pamphlets, mailers and other material developed, collected, prepared or caused to be prepared under this Agreement shall be the property of City whether or not used, so long as that material has been paid for by the City. City shall not be limited in any way or at any time in its use of said material. City acknowledges that it shall not own any of Contractor's proprietary, confidential or trade secret information, such as formulas, patterns, compilations, programs, devices, methods, techniques or processes through which Contractor derives independent economic value because the foregoing item[s] is not generally known to the public and is the subject of reasonable efforts to maintain its secrecy.

14. CONFIDENTIALITY OF DATA AND MATERIAL

14.1 All ideas, memoranda, specifications, plans, manufacturing procedures, data, drawings, descriptions, documents, discussions or other information developed or received by or for Contractor and all other written information submitted to Contractor in connection with the performance of this Agreement shall be held confidential by Contractor and shall not, without the prior written consent of City, be used for any purposes other than the performance of the Services nor be disclosed to an entity not connected with performance of the Services. Such data information or reports may be viewed by or distributed to third parties only after prior written approval of City. Nothing furnished to Contractor which is otherwise known to Contractor or becomes generally known to the related industry shall be deemed confidential.

14.2 Contractor shall take reasonable efforts to safeguard any and all City property entrusted to Contractor's custody or control; however, Contractor shall not be liable to City for any loss, damage, or destruction of any such property unless Contractor's actions constitute negligence or reckless disregard of City's property.

14.3 A Party disclosing information to the other which it considers to be Confidential Information, shall clearly label that information "Confidential" before disclosing it to the other Party. Confidential Information means information which is of a non-

public, proprietary or confidential nature belonging to the Disclosing Party, including without limitation, all reports and analyses, technical and economic data, studies, forecasts, trade secrets, research or business strategies, financial or contractual information, gas or coal reserve information, rates, loads, energy requirements, certain sales market information, research, developmental, engineering, manufacturing, technical, marketing, sales, financial, operating, performance, cost, business and process information or data, know-how, and computer programming or other written or oral information. Confidential Information may be in any form whatsoever, including without limitation writings, recordings, electronic or oral data, computer programs, logic diagrams, component specifications, drawings or other media. Only that information disclosed by a Party and clearly designated in writing as Confidential Information prior to its disclosure shall be deemed to be Confidential Information. Verbal information that is intended to be treated as Confidential Information shall be described in writing and identified as Confidential Information.

14.4 Contractor acknowledges that City is a public agency subject to the requirements of the California Public Records Act Cal. Gov. Code section 6250 et seq. City acknowledges that Contractor may submit information to City that Contractor considers confidential, proprietary, or trade secret information pursuant the Uniform Trade Secrets Act (Cal. Civ. Code section 3426 et seq.), or otherwise protected from disclosure pursuant to exemptions to the California Public Records Act (Government Code sections 6254 and 6255). Contractor acknowledges that City may submit to Contractor information that City considers confidential or proprietary or protected from disclosure pursuant to exemptions to the California Public Records Act (Government Code sections 6254 and 6255). Upon request or demand of any third person or entity not a party to this Agreement ("Requestor") for production, inspection and/or copying of information designated by a Disclosing Party as Confidential Information, the Receiving Party as soon as practical but within three (3) days of receipt of the request, shall notify the Disclosing Party that such request has been made by telephone call, letter sent via facsimile and/or by US Mail to the address and facsimile number listed at the end of the Agreement. The Disclosing Party shall be solely responsible for taking whatever legal steps are necessary to protect information deemed by it to be Confidential Information and to prevent release of information to the Requestor by the Receiving Party. If the Disclosing Party takes no such action, after receiving the foregoing notice from the Receiving Party, the Receiving Party shall be permitted to comply with the Requestor's demand and is not required to defend against it.

14.5 The Receiving Party may cooperate with the Disclosing Party in any efforts to prevent release of the Confidential Information; however, the Receiving Party shall not be required to expend any monies in excess of the cost of notifying the Disclosing Party by telephone, facsimile and/or mail of the pendency of a demand for the Confidential Information. So long as the Receiving Party complies with the provisions of notification set forth in this Agreement, the Receiving Party shall not be liable for, and Customer and City hereby release each other from, any liability for any damages arising from any requirement under the law that the Receiving Party

release Confidential Information to a Requestor, and such release includes the officers, commissioners, employees, agents, council members, and directors, as those terms may apply to each Party hereto, without limitation.

14.6 The Receiving Party may, at its sole expense, institute, or intervene in any proceeding, in order to protect the Confidential Information from disclosure, and if the Disclosing Party requests and agrees in writing to indemnify the Receiving Party from any expense or liability for expenses, the Receiving Party may cooperate actively in any such action or proceeding; provided, however, that the Receiving Party shall have no duty to the Disclosing Party to actively cooperate, notwithstanding an offer by the Receiving Party to provide a complete indemnity.

15. CORRECTION OF WORK

The performance of Services by Contractor shall not relieve Contractor from any obligation to correct any incomplete, inaccurate or defective work at no further cost to City.

16. NOTICES

All notices to the Parties shall, unless otherwise requested in writing, be sent to City addressed as follows:

City of Santa Clara
1500 Warburton Avenue
Santa Clara, California 95050,
or by facsimile at (408) 244-2990

and to Contractor addressed as follows:

PECI
Attention: Legal Department
100 SW Main St., Suite 1600
Portland, OR 97024

17. CHANGES

City may, from time to time, request changes in the "Scope of Services" to be performed pursuant to a Call issued under this Agreement. Such changes, including any increase or decrease in the amount of Contractor's compensation, which are mutually agreed upon by and between City and Contractor, shall be incorporated in written amendments to the Call, or included in a subsequent Call.

18. CONTRACT FOR ADMINISTRATIVE SERVICES

To the extent that this Agreement is a contract authorizing Calls to be made for Administrative Services, the City Council entered into such Agreement upon the

recommendation of the City Manager pursuant to Section 1108 of City's Charter. The policy decision with respect to the Services to be provided under this Agreement was made exclusively by the City Council.

19. SUB-CONTRACTING AND ASSIGNMENT

Except as specifically provided in this Agreement, the City intends that the work described in each Call must be performed by the Contractor and not by a subcontractor or agent of the Contractor. Contractor shall not assign any interest in this Agreement, or any Call issued pursuant to this Agreement, and shall not transfer any interest in same (whether by assignment or novation) without prior written approval of City. Inclusion of a subcontractor in a proposal attached to a Call, once signed by the City, constitutes written approval.

However, claims for money due to or to become due to Contractor from City under this Agreement may be assigned to a bank, trust company or other financial institution, or to a trustee in bankruptcy, provided that written notice of any such assignment or transfer shall be first furnished to City. In case of the death of one or more members of Contractor's firm, the surviving member or members shall complete the Services covered by this Agreement or any incomplete Call. Any such assignment shall not relieve Contractor from any of its obligations or liability under the terms of this Agreement.

20. OTHER AGREEMENTS

This Agreement shall not prevent either Party from entering into similar agreements with others.

21. TOTALITY OF AGREEMENT

This Agreement embodies the entire Agreement between City and Contractor and all the terms and conditions agreed upon by the Parties to this Agreement. No other understanding, agreements, conversations, oral or otherwise, with any officer, agent, or employee of the City prior to the execution of this Agreement, regarding the subject matter of this Agreement shall affect or modify any of the forms or obligations contained in any documents comprising this Agreement. Any such verbal agreement shall be considered as unofficial information and in no way binding on either Party to this Agreement.

22. SERVICE WARRANTY

Contractor warrants that Services provided hereunder shall conform with the generally accepted professional practices and standards appropriate to the nature of the Services rendered, that the personnel furnishing said Services shall be qualified to perform the Services assigned to them and that the recommendations, guidance and performance of such personnel shall meet the standard of care normally practiced by engineers or contractors performing the same or similar Services. Contractor shall be required to correct, at no expense to City, all deficiencies in the performance of the contract service that results from Contractor's failure to observe and adhere to the above warranty and which are detected

within one (1) year from the date of completion of the Services. Work performed under this warranty shall also be warranted for a one (1) year period from the date of completion of such work. Contractor shall be required to reimburse City for all misexpenditure of funds resulting from Contractor's deficient performance of its Services.

23. DISPUTE RESOLUTION

Any documented dispute between the Parties which arises during the performance of this Agreement and which the Parties cannot then resolve, shall be subject to the following administrative remedy prior to any litigation occurring between the Parties.

23.1 **Internal Resolution.** Both Parties shall attempt to resolve any controversy claim, problem or dispute arising out of, or related to, this Agreement through good faith consultation in the ordinary course of business. In the event that any problem or dispute is not resolved, by the project managers of each Party, either Party may upon written notice to the other request that the matter be referred to senior management officials within each respective organization with express authority to resolve the problem or issue. Such representatives shall meet or confer at least once in good faith, to negotiate a mutually acceptable resolution within ten (10) business days of such written notice. If the parties cannot reach a mutually agreeable resolution, then the dispute or issue shall be submitted to mediation within thirty (30) calendar days of the written request of one Party after the service of that request on the other Party.

23.2 **Notice.** A Party with claims arising under this Agreement shall, within thirty (30) days of knowledge of said claim, begin the process of exhausting all administrative remedies, as well as any other administrative remedies required by law. If the final decision or outcome of any administrative proceeding is unacceptable to a Party, then within thirty (30) days of the date of that final decision, the dissatisfied Party shall give written notice (certified mail-return receipt requested) to the other Party of the issues it deems outstanding that must be submitted to mediation (Request for Mediation).

23.3 **Mediation.** Any controversies between City and Contractor regarding the construction or application of this Agreement, and claims arising out of this Agreement or its breach, except those for which the appropriate remedy should be injunctive relief shall be mediated within sixty (60) days of the date on the written Request for Mediation, or the soonest date thereafter that the mediator is available.

23.4 **Mediator.** Within twenty (20) days or less of the written Request for Mediation, the Parties shall agree on one mediator. If they cannot agree on one mediator within such twenty-day period each Party shall list the names of three (3) potential mediators affiliated with the Judicial Arbitration and Mediation Service ("JAMS") and shall supply them to the Party demanding the mediation. The Party demanding the mediation shall merge the names of all the potential mediators into a single list, not indicating which Party submitted the name. On that same date as all names are received by the demanding Party, the Parties shall jointly sign a letter directed to the

San Jose office of JAMS, requesting that JAMS appoint a mediator from the enclosed list. If a Party refuses or fails to submit three (3) names within the three day period to the Party preparing the letter, then the letter shall be sent on the fifth day without input from the Party failing to submit names. The mediation meeting shall not exceed one day (eight (8) hours). The Parties may agree to extend the time allowed for mediation under this Agreement.

23.5 **Costs.** The costs of mediation shall be borne by the Parties equally.

23.6 **Discovery.** If, during any dispute between the Parties, a demand is made by Contractor for documents under the Public Records Act, the City shall have reciprocal rights to demand documents from Contractor.

23.7 **Condition Precedent to Filing Suit.** Except as provided in Article 23.3, mediation under this section is a condition precedent to a Party filing an action in any court, unless that Party has made demand for mediation and the other Party has failed or refused to engage in mediation. In the event of litigation arising out of any dispute related to this Agreement, the Parties shall each pay their respective attorneys fees, expert witness costs and cost of suit, regardless of the outcome of the litigation.

23.8 **Work Through Disputes.** If the City and the Contractor are unable to reach agreement on disputed work, the Contractor shall nevertheless proceed with the disputed work, and Payment therefore shall be as subsequently determined pursuant to this Article.

24. CAPTIONS

The captions of the various paragraphs of this Agreement are for convenience or record only, and shall not be considered or referred to in resolving questions or interpretations.

25. APPLICABLE LAW

Any dispute regarding this Agreement, including without limitation, its validity, interpretation, performance, enforcement and damages shall be determined in accordance with the laws of the State of California without regard to California's choice of law principles.

26. NO THIRD PARTY BENEFICIARY

This Agreement shall not be construed to be an agreement for the benefit of any third party or parties and no third party or parties shall have any claim or right of action under this Agreement for any cause whatsoever.

27. NO PLEDGING OF CITY'S CREDIT

Under no circumstances shall Contractor have the authority or power to pledge the credit of the City of Santa Clara, or to incur any obligation in the name of the City without City's prior written agreement or confirmation. Contractor shall save and hold harmless the City, its City Council, its officers, employees, boards and commissions for expenses arising out of any unauthorized pledges of City's credit by Contractor or its subcontractors under this Agreement. Contractor agrees to obtain City's approval of all expenditures in connection with any materials to be purchased, projects to be performed, advertising to be placed, work to be "outsourced" or other items or Services which will or might be charged to the City. Such approval, if verbal, shall be confirmed by the City in a written letter sent via facsimile and U.S. mail to Contractor in accordance with the terms of this Agreement.

28. USE OF CITY NAME OR LOGO

Contractor shall not use City of Santa Clara's or Silicon Valley Power's name, insignia, trademark, logo or distribute exploitative publicity pertaining to the Services rendered under this Agreement in any magazine, trade paper, newspaper or other medium without the express written consent of City.

29. MONITORING AND EVALUATION OF SERVICES

City may monitor the Services performed under this Agreement to determine whether Contractor's operation conforms to City policy and to the terms of this Agreement. City may also monitor the Services to be performed to determine whether financial operations are conducted in accordance with applicable City, county, state and federal requirements. If, in the course of monitoring and evaluation, City believes it has discovered any practice, actions, procedure or policy of Contractor which deviates from the terms of this Agreement, City may notify Contractor in writing and Contractor agrees to respond in writing to City within seven (7) calendar days regarding such action, procedure or policy. However, if any action of Contractor constitutes a breach of this Agreement, City may notify contractor in writing that the Agreement has been terminated pursuant to the provisions set forth in this Agreement.

30. FAIR EMPLOYMENT

Contractor shall not discriminate against any employee or applicant for employment because of race, color, creed, national origin, gender, sexual orientation, age, disability, religion, ethnic background, or marital status, in violation of state or federal law.

31. SEVERABILITY CLAUSE

In case any one or more of the provisions contained herein shall, for any reason, be held invalid, illegal or unenforceable in any respect, it shall not affect the validity of the other provisions, which shall remain in full force and effect.

32. WAIVER

Waiver by a Party of any one or more of the conditions of performance under this Agreement shall not be construed as a subsequent waiver(s) of that condition or of any other condition of performance under this Agreement. No delay in exercising, partial exercise, or complete failure to exercise any right, power, or privilege under this Agreement shall operate as a waiver.

33. CONFLICT OF INTEREST

Contractor certifies that to the best of its knowledge, no City employee or officer of any public agency has any pecuniary interest in the business of Contractor and that no person associated with Contractor has any interest that would conflict in any manner or degree with the performance of this Agreement. Contractor represents that it presently has no interest and shall not acquire any interest, direct or indirect, which could conflict in any manner or degree with the faithful performance of this Agreement. Contractor is familiar with the provisions of California Government Code Section 87100 and following, and certifies that it does not know of any facts which constitute a violation of said provisions. Contractor will advise City if a conflict arises.

34. CONSTRUCTION AND INTERPRETATION OF AGREEMENT

This Agreement, and each of its provisions, terms and conditions, has been reached as a result of negotiations between the Parties. Accordingly, each of the Parties expressly acknowledges and agrees that this Agreement shall not be deemed to have been authored by, prepared by, or drafted by, any particular party, and that the rule of construction to the effect that ambiguities are to be resolved against the drafting party shall not be employed in the interpretation of this Agreement or in the resolution of disputes.

35. COMPLIANCE WITH ETHICAL STANDARDS

As a condition precedent to entering into this Agreement, Contractor shall:

35.1. Read Exhibit A, entitled "ETHICAL STANDARDS FOR CONTRACTORS SEEKING TO ENTER INTO AN AGREEMENT WITH THE CITY OF SANTA CLARA, CALIFORNIA" incorporated by this reference; and,

(continued on page 16 of 16)

///

///

35.2. Execute the affidavit included in Exhibit B, entitled "AFFIDAVIT OF COMPLIANCE WITH ETHICAL STANDARDS" incorporated by this reference.

The Parties acknowledge and accept the terms and conditions stated herein as evidenced by the following signatures of their duly authorized representatives. It is the intent of City and Contractor that this Agreement shall become operative on the Effective Date first set forth in the Preamble, above.

This Agreement may be executed in counterparts, each of which shall be deemed to be an original, but both of which shall constitute one and the same instrument; and, the Parties agree that signatures on this Agreement, including those transmitted by facsimile, shall be sufficient to bind the Parties.

CITY OF SANTA CLARA, CALIFORNIA,
a chartered California municipal corporation

APPROVED AS TO FORM:

RICHARD E. NOSKY, JR.
City Attorney

ATTEST:

ROD DIRIDON, JR.
City Clerk

JULIO J. FUENTES
City Manager
1500 Warburton Avenue
Santa Clara, CA 95050
Telephone: (408) 615-2210
Fax: (408) 241-6771

"CITY"

PORTLAND ENERGY CONSERVATION, INC.
an Oregon nonprofit corporation

By: _____
KERSTIN ROCK
Title: Director
Address: 100 SW Main Street, Suite 1500
Portland, OR 97204
Telephone: (503) 575-4223
Fax: (503) 295-0820

"CONTRACTOR"

CALL AGREEMENT BY AND BETWEEN THE CITY OF SANTA CLARA, CALIFORNIA AND PORTLAND ENERGY CONSERVATION, INC. EXHIBIT A

ETHICAL STANDARDS FOR CONTRACTORS SEEKING TO ENTER INTO AN AGREEMENT WITH THE CITY OF SANTA CLARA, CALIFORNIA

Termination of Agreement for Certain Acts

A. City may, at its sole discretion, terminate this Agreement in the event any one or more of the following occurs:

1. If a Contractor[1] does any of the following:

   a. Is convicted[2] of operating a business in violation of any Federal, State or local law or regulation;

   b. Is convicted of a crime punishable as a felony involving dishonesty[3];

   c. Is convicted of an offense involving dishonesty or is convicted of fraud or a criminal offense in connection with: (1) obtaining; (2) attempting to obtain; or, (3) performing a public contract or sub-contract;

   d. Is convicted of any offense which indicates a lack of business integrity or business honesty which seriously and directly affects the present responsibility of a City Contractor or sub-contractor; and/or,

   e. Made (or makes) any false statement(s) or representation(s) with respect to this Agreement.

2. If fraudulent, criminal or other seriously improper conduct of any officer, director, shareholder, partner, employee or other individual associated with the Contractor can be imputed to the Contractor when the conduct occurred in connection with the

---

[1] For purposes of this Agreement, the word "Contractor" (whether a person or a legal entity) means any of the following: an owner or co-owner of a sole proprietorship; a person who controls or who has the power to control a business entity; a general partner of a partnership; a principal in a joint venture; or a primary corporate stockholder [i.e., a person who owns more than ten percent (10%) of the outstanding stock of a corporation] and who is active in the day to day operations of that corporation.

[2] For purposes of this Agreement, the words "convicted" or "conviction" mean a judgment or conviction of a criminal offense by any court of competent jurisdiction, whether entered upon a verdict or a plea, and includes a conviction entered upon a plea of nolo contendere within the past five (5) years.

[3] As used herein, "dishonesty" includes, but is not limited to, embezzlement, theft, forgery, bribery, falsification or destruction of records, making false statements, failure to pay tax obligations, receiving stolen property, collusion or conspiracy.

individual's performance of duties for or on behalf of the Contractor, with the Contractor's knowledge, approval or acquiescence, the Contractor's acceptance of the benefits derived from the conduct shall be evidence of such knowledge, approval or acquiescence.

B. City may also terminate this Agreement in the event any one or more of the following occurs:

1. If City determines that Contractor no longer has the financial capability[4] or business experience[5] to perform the terms of, or operate under, this Agreement; or

2. If City determines that the Contractor fails to submit information, or submits false information, which is required to perform or be awarded a contract with city, including, but not limited to, Contractor's failure to maintain a required State issued license, failure to obtain a City business license (if applicable) or failure to purchase and maintain bonds and/or insurance policies required under this Agreement.

C. In the event a prospective Contractor (or bidder) is ruled ineligible (debarred) to participate in a contract award process or a contract is terminated pursuant to these provisions, Contractor may appeal City's action to the City Council by filing a written request with the City Clerk within ten (10) days of the notice given by City to have the matter heard. The matter will be heard within thirty (30) days of the filing of the appeal request with the City Clerk. The Contractor will have the burden of proof on the appeal. The Contractor shall have the opportunity to present evidence, both oral and documentary, and argument.

---

[4] Contractor becomes insolvent, transfers assets in fraud of creditors, makes an assignment for the benefit of creditors, files a petition under any section or chapter of the federal Bankruptcy Code [11 U.S.C.], as amended, or under any similar law or statute of the United States or any state thereof, is adjudged bankrupt or insolvent in proceedings under such laws, or a receiver or trustee is appointed for all or substantially all of the assets of Contractor.

[5] Loss of personnel deemed essential by the City for the successful performance of the obligations of the Contractor to the City.

CALL AGREEMENT BY AND BETWEEN
THE CITY OF SANTA CLARA, CALIFORNIA
AND
PORTLAND ENERGY CONSERVATION, INC.

EXHIBIT B

AFFIDAVIT OF COMPLIANCE WITH ETHICAL STANDARDS
[CITY OF SANTA CLARA]

I, Kerstin Rock, being first duly sworn, depose and say that I am the Director of Portland Energy Conservation, Inc. and I hereby state that I have read and understand the language, entitled "*ETHICAL STANDARDS FOR CONTRACTORS SEEKING TO ENTER INTO AN AGREEMENT WITH THE CITY OF SANTA CLARA, CALIFORNIA*" (herein "Ethical Standards") set forth in Exhibit A. I have authority to make these representations on my own behalf or on behalf of the legal entity identified herein. I have examined appropriate business records and I have made inquiry of those individuals potentially included within the definition of "Contractor" contained in the Ethical Standards.

Based on my review of the appropriate documents and the necessary inquiry responses, I hereby state that neither the business entity nor any individual(s) belonging to a category identified in footnote #1 of Exhibit A [i.e., owner or co-owner of a sole proprietorship, general partner, person who controls or has power to control a business entity, etc.] has been convicted of any one or more of the crimes identified in Exhibit A within the past five (5) years. The above assertions are true and correct and are made under penalty of perjury under the laws of the State of California.

PORTLAND ENERGY CONSERVATION, INC.

By: _____
Kerstin Rock
Director

NOTARY'S ACKNOWLEDGMENT TO BE ATTACHED

Please execute the affidavit and attach a notary public's acknowledgment of execution of the affidavit by the signatory. If the affidavit is on behalf of a corporation, partnership, or other legal entity, the entity's complete legal name and the title of the person signing on behalf of the legal entity shall appear above. Written evidence of the authority of the person executing this affidavit on behalf of a corporation, partnership, joint venture, or any other legal entity, other than a sole proprietorship, shall be attached.

State of Oregon)
County of Multnomah)

On this, the 9th day of June, 2014, before me a notary public, the undersigned officer, personally appeared before me, known to me (or satisfactorily proven) to be the person whose name is subscribed to the within instrument, and acknowledged that she executed the same for the purposes therein contained.

In witness hereof, I hereunto set my hand and official seal.

Cherlyn K Bryans
Notary Public

OFFICIAL STAMP
CHERLYN BRYANS
NOTARY PUBLIC-OREGON
COMMISSION NO. 920384
MY COMMISSION EXPIRES SEPTEMBER 23, 2017

CALL AGREEMENT BY AND BETWEEN THE CITY OF SANTA CLARA, CALIFORNIA AND PORTLAND ENERGY CONSERVATION, INC.

EXHIBIT C

INSURANCE REQUIREMENTS

Without limiting the Contractor's indemnification of the City, and prior to commencing any of the Services required under this Agreement, the Contractor shall purchase and maintain in full force and effect, at its sole cost and expense, the following insurance policies with at least the indicated coverages, provisions and endorsements:

A. COMMERCIAL GENERAL LIABILITY INSURANCE

1. Commercial General Liability Insurance policy which provides coverage at least as broad as Insurance Services Office form CG 00 01. Policy limits are subject to review, but shall in no event be less than, the following:

   $1,000,000 each occurrence
   $1,000,000 general aggregate
   $1,000,000 products/completed operations aggregate
   $1,000,000 personal injury

2. Exact structure and layering of the coverage shall be left to the discretion of Contractor; however, any excess or umbrella policies used to meet the required limits shall be at least as broad as the underlying coverage and shall otherwise follow form.

3. The following provisions shall apply to the Commercial Liability policy as well as any umbrella policy maintained by the Contractor to comply with the insurance requirements of this Agreement:

   a. Coverage shall be on a "pay on behalf" basis with defense costs payable in addition to policy limits;

   b. There shall be no cross liability exclusion which precludes coverage for claims or suits by one insured against another; and

   c. Coverage shall apply separately to each insured against whom a claim is made or a suit is brought, except with respect to the limits of liability.

B. BUSINESS AUTOMOBILE LIABILITY INSURANCE

Business automobile liability insurance policy which provides coverage at least as broad as ISO form CA 00 01, with minimum policy limits of not less than one million dollars ($1,000,000) each accident using, or providing coverage at least as broad as, Insurance Services Office form CA 00 01. Liability coverage shall apply to all owned, non-owned and hired autos.

C. WORKERS' COMPENSATION

1. Workers' Compensation Insurance Policy as required by statute and employer's liability with the following limits: at least one million dollars ($1,000,000) policy limit Illness/Injury by disease, and one million dollars ($1,000,000) for each Accident/Bodily Injury.

2. The indemnification and hold harmless obligations of Contractor included in this Agreement shall not be limited in any way by any limitation on the amount or type of damage, compensation or benefit payable by or for Contractor or any subcontractor under any Workers' Compensation Act(s), Disability Benefits Act(s) or other employee benefits act(s).

3. This policy must include a Waiver of Subrogation in favor of the City of Santa Clara, its City Council, commissions, officers, employees, volunteers and agents.

D. COMPLIANCE WITH REQUIREMENTS

All of the following clauses and/or endorsements, or similar provisions, must be part of each commercial general liability policy, and each umbrella or excess policy.

1. Additional Insureds. City of Santa Clara, its City Council, commissions, officers, employees, volunteers and agents are hereby added as additional insureds in respect to liability arising out of Contractor's work for City, using Insurance Services Office (ISO) Endorsement CG 20 10 11 85 or the combination of CG 20 10 03 97 and CG 20 37 10 01, or its equivalent.

2. Primary and non-contributing. Each insurance policy provided by Contractor shall contain language or be endorsed to contain wording making it primary insurance as respects to, and not requiring contribution from, any other insurance which the indemnities may possess, including any self-insurance or self-insured retention they may have. Any other insurance indemnities may possess shall be considered excess insurance only and shall not be called upon to contribute with Contractor's insurance.

3. Cancellation.

   a. Each insurance policy shall contain language or be endorsed to reflect that no cancellation or modification of the coverage provided due to non-payment of premiums shall be effective until written notice has been given to City at least ten (10) days prior to the effective date of such modification or cancellation. In the event of non-renewal, written notice shall be given at least ten (10) days prior to the effective date of non-renewal.

   b. Each insurance policy shall contain language or be endorsed to reflect that no cancellation or modification of the coverage provided for any cause save and except non-payment of premiums shall be effective until written notice has been given to City at least thirty (30) days prior to the effective date of such modification or cancellation. In the event of non-renewal, written notice shall be given at least thirty (30) days prior to the effective date of non-renewal.

4. Other Endorsements. Other endorsements may be required for policies other than the commercial general liability policy if specified in the description of required insurance set forth in Sections A through D of this Exhibit C, above.

E. ADDITIONAL INSURANCE RELATED PROVISIONS

Contractor and City agree as follows:

1. Contractor agrees to ensure that subcontractors, and any other party involved with the Services, who is brought onto or involved in the performance of the Services by Contractor, provide the same minimum insurance coverage required of Contractor, except as with respect to limits. Contractor agrees to monitor and review all such coverage and assumes all responsibility for ensuring that such coverage is provided in conformity with the requirements of this Agreement. Contractor agrees that upon request by City, all agreements with, and insurance compliance documents provided by, such subcontractors and others engaged in the project will be submitted to City for review.

2. Contractor agrees to be responsible for ensuring that no contract used by any party involved in any way with the project reserves the right to charge City or Contractor for the cost of additional insurance coverage required by this Agreement. Any such provisions are to be deleted with reference to City. It is not the intent of City to reimburse any third party for the cost of complying with these requirements. There shall be no recourse against City for payment of premiums or other amounts with respect thereto.

3. The City reserves the right to withhold payments from the Contractor in the event of material noncompliance with the insurance requirements set forth in this Agreement.

F. EVIDENCE OF COVERAGE

Prior to commencement of any Services under this Agreement, Contractor, and each and every subcontractor (of every tier) shall, at its sole cost and expense, purchase and maintain not less than the minimum insurance coverage with the endorsements and deductibles indicated in this Agreement. Such insurance coverage shall be maintained with insurers, and under forms of policies, satisfactory to City and as described in this Agreement. Contractor shall file with the City all certificates and endorsements for the required insurance policies for City's approval as to adequacy of the insurance protection.

G. EVIDENCE OF COMPLIANCE

Contractor or its insurance broker shall provide the required proof of insurance compliance, consisting of Insurance Services Office (ISO) endorsement forms or their equivalent and the ACORD form 25-S certificate of insurance (or its equivalent), evidencing all required coverage shall be delivered to City, or its representative as set forth below, at or prior to execution of this Agreement. Upon City's request, Contractor shall submit to City copies of the actual insurance policies or renewals or replacements. Unless otherwise required by the terms of this Agreement, all certificates, endorsements, coverage verifications and other items required to be delivered to City pursuant to this Agreement shall be mailed to:

EBIX Inc.
City of Santa Clara - Electric
P.O. 12010-S2 or 151 North Lyon Avenue
Hemet, CA 92546-8010 Hemet, CA 92543

Telephone number: 951-766-2280
Fax number: 770-325-0409
Email address: ctsantaclara@ebix.com

H. QUALIFYING INSURERS

All of the insurance companies providing insurance for Contractor shall have, and provide written proof of, an A. M. Best rating of at least A minus 6 (A- VI) or shall be an insurance company of equal financial stability that is approved by the City or its insurance compliance representatives.

Ebix Insurance No. S00002171

CALL NO. 14-1
FOR PROFESSIONAL SERVICES
TO BE PROVIDED TO THE
CITY OF SANTA CLARA, CALIFORNIA
BY PORTLAND ENERGY CONSERVATION, INC.

The Parties to this Call No. 14-1 ("Call") agree that on this _____ day of _____ 2014, this Call is made pursuant to the terms of a Call Agreement between the Parties entitled, "Call Agreement by and between the City of Santa Clara, California and Portland Energy Conservation, Inc.," of the same date, the terms of which are incorporated by this reference. This Call describes the Services to be provided to the City of Santa Clara, California ("City") by Portland Energy Conservation, Inc. ("Contractor"), which are more fully described in Contractor's proposal to City entitled "PECI Data Center Market Characterization Study Scope of Work" dated May 2, 2014 ("Proposal"), attached to this Call as Exhibit A and incorporated by this reference. The Services to be performed under this Call shall be completed within the time period beginning on July 1, 2014 and ending on December 31, 2015. The attached Proposal contains a complete description of the Services, and performance dates for the completion of such Services, to be performed by the Contractor under this Call. In no event shall the amount paid to the Contractor for the Services provided to City by the Contractor under this Call, including all fees or pre-approved costs and/or expenses, exceed thirty four thousand eight hundred ninety eight dollars ($34,898.00), subject to budgetary appropriations.

The Parties acknowledge and accept the terms and conditions of this Call as evidenced by the following signatures of their duly authorized representatives.

This Agreement may be executed in counterparts, each of which shall be deemed to be an original, but both of which shall constitute one and the same instrument; and, the Parties agree that signatures on this Agreement, including those transmitted by facsimile, shall be sufficient to bind the Parties.

CITY OF SANTA CLARA, CALIFORNIA,
a chartered California municipal corporation

APPROVED AS TO FORM:

RICHARD E. NOSKY, JR.
City Attorney

ATTEST:

ROD DIRIDON, JR.
City Clerk

JULIO J. FUENTES
City Manager
1500 Warburton Avenue
Santa Clara, CA 95050
Telephone: (408) 615-2210
Fax: (408) 241-6771

"CITY"

PORTLAND ENERGY CONSERVATION, INC.
an Oregon nonprofit corporation

By: _____
KERSTIN ROCK
Title: Director
Address: 100 SW Main Street, Suite 1500
Portland, OR 97204
Telephone: (503) 575-4223
Fax: (503) 295-0820

"CONTRACTOR"

PECI Data Centers Market Characterization Study

Statement of Work

May 2, 2014

1.0 BACKGROUND/ PROJECT SUMMARY

Data centers represent a growing portion of power use in the US. While utilities have largely been successful in identifying and working with large data centers to make energy efficiency improvements, small to medium data centers remain hard-to-reach. In general, these small-to- medium data centers (less than approximately 5,000 square feet in size), which are embedded in commercial and institutional buildings, represent untapped potential for energy savings.

However, this market segment presents significant challenges from a utility perspective. There is a lack of data regarding HVAC and IT systems configurations, a lack of measures-level data and energy savings quantification, and lack of a comprehensive understanding of this market sector, its VARS and OEM networks, and its current operational practices, barriers to adoption of energy efficiency strategies, and best practices for energy savings. Because these small-to-medium data centers are embedded within larger commercial buildings, identifying and gathering information on them can be difficult. The purpose of this project is to compile useful data to help understand and address the needs of this market sector, including the interaction of building owners, tenants, and facility managers.

The Northwest Energy Efficiency Alliance (NEEA), Pacific Gas & Electric (PG&E), Silicon Valley Power (SVP) and other utility partners including San Diego Gas & Electric (SDG&E), Southern California Edison (SCE), and The City of Palo Alto intend to share information and lessons learned related to the data center research effort referred to as the Small/Medium Data Center Research Collaborative ("Collaborative"). The objective of the Collaborative is to openly and transparently share with other Collaborative members the process, learnings, deliverables, and results generated as an outcome of completing the attached statement of work. Each Collaborative member has stated its intention to share with other Collaborative members its other historical, current, and planned efforts related to data center market research, exclusive of confidential or proprietary information. The Collaborative acknowledges that parties not part of the Collaborative will seek and benefit from the results of this research and is supportive of sharing with outside parties. Each Collaborative member reserves the right to publish or share the results of its research at its own discretion.

Project Objectives

The objective of the Collaborative is to further build upon and leverage market research focused on further characterizing the niche, hard-to-reach market of small-to-medium data centers.

The primary objectives of the project are to:

- Develop enhanced understanding of the small-to-medium data center market, including current practices, barriers to adoption, and best practices, as obtained

through focus groups with data center owners and managers, equipment manufacturers and vendors.

- Validate Value Propositions – Validate the value propositions of key stakeholder groups and document key business drivers, how stakeholders are motivated, how they make decisions and how and when business transactions are conducted between stakeholder groups, including:
    - Data Center Managers
    - Facilities Managers
    - Resource Conservation Managers
    - Building Owners
    - VARS
    - OEM's
    - Management of businesses that the data center supports
    - Utilities
- Validate Solutions – Validate possible solutions to alleviate barriers to increasing or promoting energy efficient practices, providing a series of straw man concepts to initiate the discussion and obtain feedback and input on a potential solution set.
- Set framework to develop, vet and/or adapt a data collection method that enables the consistent collection of a detailed and robust dataset related to data center energy efficiency opportunities, as well as facilitates quantification and documentation of energy efficiency opportunities and related savings.

The Collaborative intends to build upon other work and leverage what has been published by NEEA, PG&E, LBNL, NRDC, EPRI, DOE, and others. The Collaborative does not intend to duplicate work that has been previously completed, but rather intends to build upon previous efforts. Key research results that are anticipated to be leveraged and/or integrated include but are not limited to the following:

- Lawrence Berkeley National Lab (LBNL) ,April 2013, Final Project Report: Energy Efficiency in Small Server Rooms
- Natural Resources Defense Council (NRDC), February 2012, Small Server Rooms, Big Energy Savings Opportunities and Barriers to Energy Efficiency on the Small Server Room Market
- LBNL and NRDC, October 2012, Improving Energy Efficiency for Server Rooms and Closets – Top 14 Measures to Save Energy in Your Server Room or Closet (Fact Sheet).
- Cadmus research findings, October 2013, PG&E Small Data Center Manager and IT Vendor Study
- PECI report to NEEA, 2013, Integrated Data Centers Opportunity Assessment – Final Report.
- IDC report to NEEA, March 2012, SMB Energy Efficiency Market Research Study.
- Department of Energy, 2011, Data Center Profiler (DC Pro) Software Tool Suite (including software suite, Engineering Reference, and Data Collection Guide)
- Bonneville Power Administration IT Technical Advisory Group (TAG) sharings and outcomes
- Electric Power Resource Institute (EPRI) Coordinated Early Deployments Project as it relates to data center technologies

Portland Energy Conservation, Inc. (PECI) has been selected as the implementing contractor for NEEA, PG&E, and other members of the Collaborative. Each Collaborative member will contract separately with PECI.

There are three overarching types of activities related to the work of the Collaborative.

1. Workshops

One workshop will be sponsored by NEEA and held in Seattle. One workshop will be sponsored by PG&E to be held in San Francisco. Also known as focus groups or market actor collaboratives, the workshops will both be administered by QDI, which is a specialty firm experienced in the preparation, execution, and reporting for focus group events focused on data centers.

The workshops will be used to help validate and/or develop program designs and/or market interventions that are cost-effective and meet the needs of both utilities and their customers, to include data center owners and managers, as well as owners and managers of commercial real estate properties who have embedded data centers.

2. Field Engineer's Toolkit

The Field Engineer's Toolkit is designed with the field engineer in mind, and may be used by utility or third party program staff and engineers to oversee or conduct data center efficiency projects. The Toolkit is focused on using a practical approach to document potential data center IT and power-related measures that may be included in a utility's future portfolio.

The toolkit will build upon work PECI is currently contracted for under PG&E's 2013-14 365 IDEEA Program, which specifically targets and is contracted to deliver HVAC optimization measure energy savings for data centers less than 5,000 square feet in size and which are embedded in commercial buildings. The toolkit is anticipated to include the following key elements:

- Technical Guide
    a) Data collection forms necessary to conduct data center assessments for IT, power, and HVAC
    b) Users Guide
    c) Engineering service provider qualification checklist
- Training PowerPoint that can be used to train engineering service providers on the data collection requirements and methodology

The Toolkit is also intended to build upon efforts such as LBNL's research that primarily covers detailed data collection for a small number of sites in data centers less than 500 square feet in size.

SVP will be able to directly leverage PG&E's Toolkit to conduct field demonstrations.

3. Field Demonstrations; Leverage Workshops and Toolkit

Other phases of this effort may include one or more of the following activities at the sole discretion of each Collaborative partner:

1. SVP will conduct field demonstration efforts (pilots) that collect data over multiple field sites for purposes of generating measure-level or systems-level data. Other partners may also conduct field demonstrations. Collaborative partners intend to share field demonstration data
2. Further vet or develop intervention strategies targeted at data centers
3. Inform measure workpaper or unified energy savings (UES) development related to data center energy efficiency measures, as appropriate

Collaborative members acknowledge that not all activities will be addressed by all Collaborative members. This includes how Collaborative members will work together in the future, how activities are funded, and how they are executed with selected contractors.

2.0 CONTRACT TERM

Contract shall commence upon signature by both parties and extend through December 31, 2015.

3.0 WORK LOCATION

Consultant shall perform services at one or more of the following locations:

Consultant's primary place of business located in California and Oregon:
PECI – San Francisco Office
1 Sansome St. Suite 3500
San Francisco, CA 94104

PECI – Portland Office
100 SW Main St. Suite 1500
Portland, OR 97204

Customer sites in SVP territory. All customer sites will be located in SVP service territory.

4.0 DEFINITIONS

Small data center – A small data center is defined as a non-standalone data center that is less than 1,000 square feet in size. Commonly correlated with EPA data center space type of server closets (<200 square feet), server rooms (200-500 square feet), and localized data centers (500-1,000 square feet).

Medium data center – A medium data center is defined as a non-standalone data center that is between 1,000 and 5,000 square feet in size. Common correlated with EPA data center space type of mid-tier data center.

The Project Manager (PM) manages the entire process of the contract from the creation of the scope of work to the review and approval of invoices. The Project Manager communicates the needs of PG&E and SVP to the Consultant throughout the life of the project and decides if the quality meets the specifications of the scope of work.

A Field Demonstration Protocol is designed to better understand the energy savings potential of certain data center "EE packages" by specifying a field test protocol by which system performance must be measured.

The Northwest Energy Efficiency Alliance (NEEA) is an alliance of more than 100 Northwest utilities and energy efficiency organizations working on behalf of more than 12 million energy consumers. NEEA leverages its strong regional partnerships to effect market transformation by accelerating the adoption of energy-efficient products, services and practices.

Portland Energy Conservation, Inc. (PECI) - designs and manages energy efficient programs on behalf of Utilities, Customers, Trade Allies, Workforce Training Centers, Government and National and Regional Associations.

QDI Strategies - QDI is a marketing consulting firm who conducts discovery research and focus groups to quantify market size, customer behaviors and preferences.

Small/Medium Data Center Research Collaborative (Collaborative) – The Collaborative is formed by SVP, NEEA, P&GE, SDG&E, SCE, and The City of Palo Alto.

5.0 PROJECT SCOPE

Task 1: Project Kickoff Meeting (Note: this task will be funded by PG&E. SVP will be invited to participate as a Collaborative partner.)

Consultant will meet with SVP staff and/or other Collaborative members such as PG&E to (1) discuss the project work plan, the data requirements, and the timetable for completing the project (2) confirm project objectives). Following the meeting, Consultant will deliver meeting minutes that documents the meeting's attendees, agenda, and documents the meeting's discussions and action items. a memorandum that summarizes any changes to the scope of work and to formally request any data required to complete the remaining Tasks, if applicable.

- Kickoff Meeting shall be facilitated by: Notice to proceed + 2 weeks
- Stakeholders engaged in the Collaborative will be invited to the Kickoff meeting
- Kickoff Meeting minutes shall be submitted in five (5) business days.

Due Date: April 30, 2014

Task 1 Total SVP Budget: $0

Task 2: Workshop Preparation & Execution (Note: this task will be funded by PG&E. SVP will be invited to participate as a Collaborative partner.)

- PECI will coordinate a one-day data center workshop/focus group/ market actor qualitative research event in San Francisco at Pacific Energy Center (PEC) or other location.
- The event will include two groups of market actors. The first group will include ten to twelve managers of small to medium-sized data centers and building owners/managers. The second group will include six to twelve non-competitive representatives of the Distributor, VAR and OEM communities.
- The event will be administered by QDI Strategies (QDI), a firm that specializes in working with high tech and/or data center stakeholders, and will be hosted in facilities that specialize in collaborative group activities.
- Tasks included in preparing for and delivering the event include:

- Identify and reserve specialized facility.
- Recruit participants.
- Develop event details and documentation including structure, objectives, and preparatory materials.
- Review and finalize details with PECI and NEEA project manager.
- Deliver event using qualified staff from QDI.
- Record and capture feedback during event.

- Consultant shall be responsible for:
  - Subcontracting with and managing QDI Strategies
  - Preparatory event documentation, including structure, objectives, and preparatory materials
  - Recruiting regional vendors for each workshop, conducted by QDI
  - Developing fact sheet to support vendor and end-user recruitment
  - Preparing and executing workshop

Due Date: Notice to proceed + eight weeks, estimated to be completed no later than June 30, 2014
Task 2 Total SVP Budget: $0

Task 3: Workshop Results Reporting (Note: this task will be funded by PG&E. The Final Report will be shared with SVP.)

- PECI will manage subcontractor to deliver workshop final report.
- Tasks related to reporting include:
  1. Sort and tabulate data by stakeholder group.
  2. Analyze data by stakeholder group.
  3. Develop draft and final reports that include:
     - Vendor perspective as it relates to key objectives, including:
       - Challenges to using utility incentive programs
       - Value of proposed data center offerings
     - End-user perspective as it relates to key objectives, including:
       - Validation of concerns
       - Suggestions for increased adoption of energy-efficient solutions
       - Experience with utility programs
  4. Market actor collaborative documentation, including transcripts, questionnaire, and Leader's Guide for purposes of facilitation

- Consultant shall be responsible for developing a Workshop Final Report

Due Date: Notice to proceed + twelve weeks, estimated at no later than July 31, 2014

Task 3 Total SVP Budget: $0

Task 4: Field Engineer's Toolkit Adaptation (Note: this task will be funded by PG&E. The Final Toolkit will be shared with SVP.)

- The "Field Engineer Toolkit" includes the following key elements:
  - Technical Guide
    - Data collection forms necessary to conduct data center assessments for IT, power, and HVAC
    - Users Guide that describes process, requirements, and methodology
    - Engineering service provider qualification checklist
  - Training PowerPoint to train engineering service providers on the data collection requirements and methodology
- The Field Engineer Toolkit will build off of PECI's IDEEA Data Center Airflow and Temperature Optimization Program efforts and is expected to include the following elements:

a) Technical Guide for IT, power, and HVAC

- General data collection (audit) process and requirements, including methodology to conduct the on-site assessment
- Data collection form to be used during the on-site data center assessment that specifies data center systems-level, building-level, and institutional data collection requirements.
  - Includes data points and questions targeted at building owner and manager, in addition to the data center owner and manager
  - Includes breakdown of data collection by IT, power, and HVAC system configurations.
- Methodology to collect baseline and post-implementation data, including guidance for type, frequency, and duration of data collected, e.g. spot or metered data, monitored data, etc.
  - Note that only HVAC-related measure savings will be incentivized by the Program at this time, and are the only measures that are likely to be implemented by PG&E Customers and verified by the Program.
- General methodology and guidance related to the calculation of energy savings opportunities in the data center
  - Note that only HVAC-related measure savings will be quantified by the Program. All IT and power-related opportunities will be described and quantified in order to better understand opportunities for offering related measures in the future.
- Engineering service provider qualification checklist
  - To facilitate utility or third party program screening of qualified service providers who can conduct data center assessment projects

b) Training PowerPoint that can be used train engineering service providers on the data collection requirements and methodology (<30 slides)

- Coordinate via phone and webinar with key stakeholders to review, vet, and adapt the Toolkit. Key stakeholders are expected to include:

  - Lawrence Berkeley National Lab
  - PG&E technical engineering staff
  - Other parties at PG&E's request

Due Date: Notice to proceed + eight weeks

Task 4 Total SVP Budget: $0

Task 5: Field Test Demonstration

PECI, in collaboration with SVP, will recruit two customers for field demonstrations. Using the Field Engineer's Toolkit adapted for PG&E, PECI will then conduct field test demonstrations at customer sites within SVP territory. Customers are eligible for rebates or incentives via Silicon Valley Power's Data Center or Customer Directed Rebate Programs for eligible measures, subject to SVP approval.

Customer Recruitment

- PECI will collaborate with SVP to identify prospective customers who may have interest in participating in the field demonstration.
- PECI will screen customers for participation in the field demonstration. Screening will be conducted via phone and/or in-person. Prospective project candidates will be screened to ensure, at minimum, there is presence of an on-site champion to facilitate the project through implementation, there is earmarked budget for efficiency upgrades, and that the data center meets the technical requirements for the demonstration, per the Field Engineer's Toolkit (TBD, shown in Task 4, above).
- If customers are determined not to be candidates for the field demonstration, they may be eligible to receive services and incentives under the Silicon Valley Power Data Center or Customer Directed Rebate Programs, and will be immediately referred to the appropriate program.

Using the adapted Field Demonstration Toolkit , PECI will conduct field test demonstrations at two selected customer sites with SVP territory. For each site, PECI will conduct the following activities:

1. Assessment

Using the assessment data collection form, PECI will conduct a 4-8 hour data center assessment (audit) during peak load hours. Tasks to be completed during the assessment process include but are not limited to:

- Meet with appropriate facility staff to verify assumptions, discuss any facility access or security issues, and to communicate the approach for the assessment process, including data acquisition.
- Gather information to define the Owner's Operating Requirements, including temperature requirements, implementation limitations, etc.

- Compile equipment lists and maintenance information as needed to document baseline conditions and support recommendations for energy efficiency improvements.
- Identify opportunities for improved airflow management and discuss these with the facility staff, to determine which opportunities are the most feasible.
- Identify opportunities for improving non-HVAC energy efficiency related to IT and power use. While these opportunities may not be specifically quantified for energy savings, sufficient documentation must be collected to support the general characterization of those opportunities within the Energy Savings Report (ESR).
- Gather operational and functional performance data as necessary to assess equipment operation and to identify deficiencies and measures for improvement. Gather data as necessary to quantify building operation and deficiencies, using appropriate methods including using the building automation system to trend data, monitoring with portable data loggers, and on-site measurements. Obtain baseline data for identified measures and any reasonable, measure-specific data collection or calculation methodologies requirements, prior to measure implementation.
- Document assessment results.

2. Pre-Implementation Project Documentation

Following the assessment, PECI will complete pre-implementation project documentation, to include:

- Summary of recommended measures for implementation, energy savings, estimated costs, and initial payback calculations.
- Engineering calculations or pre-approved simulation models to estimate the potential energy impacts of implementing the identified measures, including annual kilowatt hour and peak electric demand.
- Estimated implementation costs for identified measures, including documentation for the basis for cost calculations.
- Data that clearly indicates the deficiency or problem, including spot measurements, trend or portable logger data plots and files, functional test results, site visit reports, and photographs, as appropriate and/or approved by PECI.
- Energy Savings Report, detailing the identified measures and including narrative and/or comments for each finding with sufficient detail to support engineering reviews. The Energy Savings Report shall also include discussion and characterization of other energy efficiency opportunities, such as best practices or measures related to IT and power use in the data center.

Prior to delivery of the ESR to site data center staff, PECI will give SVP an opportunity to review and approve the ESR including the recommended energy savings measures and calculations.

3. Presentation of Findings
   - Upon SVP approval of the ESR, PECI will meet with site staff in person or via webinar to present the findings of the ESR. The customer and other stakeholders (e.g. SVP and implementing contractors) will be invited to attend.

- The goal of the meeting is to discuss the results, recommended measures, and recommended timeline for completion. In person presentation of the ESR to SVP customers will be conducted at PECI's discretion.

4. Customer Implementation
   - Customer is responsible for implementing measures using in-house staff and/or outside contractors at their sole discretion.
   - Implementation costs are the sole responsibility of the customer.
   - At the customer's request, PECI will help facilitate selection of implementing contractor, and support customer in the collection of bids for implementation. While PECI will facilitate this process, the final selection of the contractor/ service provider is at the sole discretion of the customer.
   - PECI will conduct short, monthly check-ins via phone or WebEx to discuss implementation challenges and review the timeline and estimated completion dates.
5. Verification of implemented measures
   - PECI will verify completion of each measure. This includes gathering data that shows the measures have been implemented completely and correctly, taking temperature spot measurements to confirm that the system is performing correctly with no hot spots, and gathering copies of the contractor's invoices from the Owner for the work performed.
   - PECI will complete Final Project Documentation, to include:
     - Updated summary of final implemented measures including final savings, costs, and payback calculations.
     - Updated engineering calculations and implementation costs that reflect final implemented measures
     - Supporting verification documentation, such as implementing contractor invoices, photographs, or other evidence of verification as appropriate and/or approved by SVP.
     - Completed Project Final Report that documents the implemented measures.
   - During verification activities, and while they are onsite, PECI will train data center staff on implemented measures to ensure they understand the measures, how to maintain them (as applicable), and help ensure persistence of energy savings in the data center.
6. Customer Incentives & Final Project Report
   - PECI will provide measure-level documentation to the SVP Data Center or Customer Directed Rebate Programs in support of SVP delivery of incentives to the customer for all pre-approved, eligible measures.
   - PECI will produce a final project report that describes the baseline condition, proposed, and final implemented measures and final energy and cost savings.

Results of the field demonstrations will be shared with PG&E and NEEA as part of the Collaborative efforts. PECI will develop a comprehensive analysis of findings for all participating field test demonstration sites.

Due Date: March 1, 2015

Task 5 Total Budget: NTE $34,898

Task 6: Stakeholders Communications Meetings (Note: this task will be funded by PG&E)

- Schedule and hold regular conference calls to provide milestone information to stakeholders (including SVP) such as the reporting of preliminary results of workshops.
- PG&E will serve as the liaison to the CPUC, helping to coordinate communications as appropriate.

Due Date: Ongoing

Task 6 Total SVP Budget: $0

Task 7. Final Report (Note: this task will be funded by PG&E. The Final Report will be shared with SVP.)

- Develop 15-20 page written report that summarizes findings and results
- Develop an Executive PowerPoint that summarizes findings and results
- Present Executive PowerPoint to PG&E at Project Wrap-up Meeting, which shall be facilitated no later than: February 1, 2015

Due Date: February 1, 2015

Task 7 Total SVP Budget: $0

7.0 Fees and Invoices

The total amount invoiced by Consultant, inclusive of all expenses and administrative costs, shall not exceed $34,898.

7.1 Hourly Rates for Program Implementer:

Job Title	Hourly Rate
Director	*$274*
Senior Project Manager	*$193*
Operations Specialist	*$96*
Senior Engineer	*$201*
Engineer II	*$147*

Consultant's hourly rates shall remain firm through the term of this Contract.

7.2 Project Fees by Task

Task 5. Field Demonstrations (Assuming a 12 month pilot, with 2 projects served)

Subtask	Staff	Michelle Lichtenfels	Kelsy Houston	Scott Schuetz	Dave Moser	Ben Wright	PECI Labor Hours	PECI Labor Cost	PECI Travel	Total Budget
	Labor Class	Senior Manager	Operations Specialist	Director	Senior Engineer	Engineer II				
	Hourly Rate	$193	$96	$274	$201	$147				
Management		12	6	-	-	-	18	$2,892		$2,892
Recruitment & screening; prep for onsite logistics		4	2	-	8	16	30	$4,924		$4,924
Audit & baseline data collection		-	-	8	16	24	48	$8,936	$400	$9,336
Data analysis		-	-	-	8	16	24	$3,960		$3,960
Energy Saving Report (ESR) & project review		-	2	-	4	8	14	$2,172		$2,172
Presentation of findings		2	-	-	2	2	6	$1,082		$1,082
Customer implementation support		-	8	2	-	8	18	$2,492		$2,492
Verification of implemented measures		-	-	2	8	24	34	$5,684	$200	$5,884
Final project report & project review		2	2	-	2	8	14	$2,156		$2,156
Total		**$3,860**	**$1,920**	**$3,288**	**$9,648**	**$15,582**	**206**	**$34,298**	**$600**	**$34,898**

Meeting Date: 7/1/14

AGENDA REPORT

City of Santa Clara, California

Agenda Item # 6B-8

Santa Clara All-America City 2001

Date: June 17, 2014

To: City Manager for Council Action

From: Director of Electric Utility

Subject: Approval of an Agreement for the Performance of Services with Davey Tree Surgery Company for Tree Trimming for Power Line Clearance

EXECUTIVE SUMMARY:

A significant threat to the integrity of our electric distribution system is the interference of trees with our power lines. In recognition of this danger, the City Manger's Directive #74 directs the Electric Department to utilize a tree trimming program to protect our distribution lines. Silicon Valley Power (SVP) submitted a Request for Proposal (RFP) directly to three qualified power line tree clearing companies and posted the RFP on the City website. Two proposals were received, and Davey Tree Surgery responded with the lowest cost proposal. Davey Tree Surgery has been our tree trimming service provider for many years and has an excellent safety and customer service record. Davey Tree Surgery Company will perform the power line clearance tree trimming in a manner designed to eliminate tree contact with power lines and to optimize clearance from high-voltage electrical equipment without damaging the structural integrity of the trees under an Agreement for the Performance of Services. A copy of the Agreement for the Performance of Services can be viewed on the City's website or is available in the City Clerk's Office for review during normal business hours.

ADVANTAGES AND DISADVANTAGES OF ISSUE:

This agreement for services provides a resource that enables Silicon Valley Power to comply with City Manager's Directive #74, thereby enhancing the reliability of our electrical distribution system by clearing trees from power lines.

ECONOMIC/FISCAL IMPACT:

The amount to be spent over the three year period of this agreement shall not exceed $2,957.077.38. The first years cost will not exceed $869,731.20. Sufficient funds are available in the Electric Department Contractual Services/Not Classified, 091-1376-87870-[A]00011-[F]59300. All future appropriations will be done through the budget process.

RECOMMENDATION:

That Council approve, and authorize the City Manager to execute, an Agreement for the Performance of Services with Davey Tree Surgery Company, in an amount not to exceed $869,731.20 for year one, or $2,957,077.38 for the three year term of the Agreement, for tree trimming for power line clearance.

John C. Roukema, Director of Electric Utility

Certified as to Availability of Funds:
Account No. 091-1376-87870 $869,731.20

Gary Ameling
Director of Finance/Assistant City Manager

APPROVED

Julio J. Fuentes, City Manager

MAJORITY VOTE OF COUNCIL

Documents Related to this Report

1) ***Agreement for the Performance of Services with Davey Tree Surgery Company***

AGREEMENT FOR THE PERFORMANCE OF SERVICES BY AND BETWEEN THE CITY OF SANTA CLARA, CALIFORNIA, AND DAVEY TREE SURGERY COMPANY

PREAMBLE

This agreement for the performance of services ("Agreement") is made and entered into on this _____ day of _____, 2014, ("Effective Date") by and between Davey Tree Surgery Company, an Ohio corporation, with its principal place of business located at 2617 South Vasco Road, Livermore, CA 94551-5015 ("Contractor"), and the City of Santa Clara, California, a chartered California municipal corporation with its primary business address at 1500 Warburton Avenue, Santa Clara, California 95050 ("City"). City and Contractor may be referred to individually as a "Party" or collectively as the "Parties" or the "Parties to this Agreement."

RECITALS

A. City desires to secure professional services more fully described in this Agreement, at Exhibit A, entitled "Scope of Services"; and

B. Contractor represents that it, and its subcontractors, if any, have the professional qualifications, expertise, necessary licenses and desire to provide certain goods and/or required services of the quality and type which meet objectives and requirements of City; and,

C. The Parties have specified herein the terms and conditions under which such services will be provided and paid for.

The Parties agree as follows:

AGREEMENT PROVISIONS

1. EMPLOYMENT OF CONTRACTOR.

City hereby employs Contractor to perform services set forth in this Agreement. To accomplish that end, City may assign a Project Manager to personally direct the Services to be provided by Contractor and will notify Contractor in writing of City's choice. City shall pay for all such materials and services provided which are consistent with the terms of this Agreement.

2. SERVICES TO BE PROVIDED.

Except as specified in this Agreement, Contractor shall furnish all technical and professional services, including labor, material, equipment, transportation, supervision and expertise (collectively referred to as "Services") to satisfactorily complete the work required by City at his/her own risk and expense. Services to be provided to City are

more fully described in Exhibit A entitled "SCOPE OF SERVICES." All of the exhibits referenced in this Agreement are attached and are incorporated by this reference.

3. COMMENCEMENT AND COMPLETION OF SERVICES.

A. Contractor shall begin providing the services under the requirements of this Agreement upon receipt of written Notice to Proceed from City. Such notice shall be deemed to have occurred three (3) calendar days after it has been deposited in the regular United States mail. Contractor shall complete the Services within the time limits set forth in the Scope of Services or as mutually determined in writing by the Parties.

B. When City determines that Contractor has satisfactorily completed the Services, City shall give Contractor written Notice of Final Acceptance. Upon receipt of such notice, Contractor shall not incur any further costs under this Agreement. Contractor may request this determination of completion be made when, in its opinion, the Services have been satisfactorily completed. If so requested by the contractor, City shall make this determination within fourteen (14) days of its receipt of such request.

4. ASSIGNMENT OF DUTIES.

No other person(s) will be assigned from Contractor other than [NA]. It is agreed by and between the Parties that should it be desirable for any other person to work under this Agreement, such person may only be added with the express written consent of City.

5. QUALIFICATIONS OF CONTRACTOR - STANDARD OF WORKMANSHIP.

Contractor represents and maintains that it has the necessary expertise in the professional calling necessary to perform services, and its duties and obligations, expressed and implied, contained herein, and City expressly relies upon Contractor's representations regarding its skills and knowledge. Contractor shall perform such services and duties in conformance to and consistent with the professional standards of a specialist in the same discipline in the State of California.

The plans, designs, specifications, estimates, calculations, reports and other documents furnished under Exhibit A shall be of a quality acceptable to City. The criteria for acceptance of the work provided under this Agreement shall be a product of neat appearance, well organized, that is technically and grammatically correct, checked and having the maker and checker identified. The minimum standard of appearance, organization and content of the drawings shall be that used by City for similar projects.

6. TERM OF AGREEMENT.

Unless otherwise set forth in this Agreement or unless this paragraph is subsequently modified by a written amendment to this Agreement, the term of this Agreement shall begin on the Effective Date of this Agreement and terminate at the end of the day three (3) years from the effective date.

7. MONITORING OF SERVICES.

City may monitor the Services performed under this Agreement to determine whether Contractor's operation conforms to City policy and to the terms of this Agreement. City may also monitor the Services to be performed to determine whether financial operations are conducted in accord with applicable City, county, state, and federal requirements. If any action of Contractor constitutes a breach, City may terminate this Agreement pursuant to the provisions described herein.

8. WARRANTY.

Contractor expressly warrants that all materials and services covered by this Agreement shall be fit for the purpose intended, shall be free from defect, and shall conform to the specifications, requirements, and instructions upon which this Agreement is based. Contractor agrees to promptly replace or correct any incomplete, inaccurate, or defective Services at no further cost to City when defects are due to the negligence, errors or omissions of Contractor. If Contractor fails to promptly correct or replace materials or services, City may make corrections or replace materials or services and charge Contractor for the cost incurred by City.

9. PERFORMANCE OF SERVICES.

Contractor shall perform all requested services in an efficient and expeditious manner and shall work closely with and be guided by City. Contractor shall be as fully responsible to City for the acts and omissions of its subcontractors, and of persons either directly or indirectly employed by them, as Contractor is for the acts and omissions of persons directly employed by it. Contractor will perform all Services in a safe manner and in accordance with all federal, state and local operation and safety regulations.

10. RESPONSIBILITY OF CONTRACTOR.

Contractor shall be responsible for the professional quality, technical accuracy and coordination of the Services furnished by it under this Agreement. Neither City's review, acceptance, nor payments for any of the Services required under this Agreement shall be construed to operate as a waiver of any rights under this Agreement or of any cause of action arising out of the performance of this Agreement and Contractor shall be and remain liable to City in accordance with applicable law for all damages to City caused by Contractor negligent performance of any of the Services furnished under this Agreement.

Any acceptance by City of plans, specifications, construction contract documents, reports, diagrams, maps and other material prepared by Contractor shall not in any respect absolve Contractor form the responsibility Contractor has in accordance with customary standards of good professional practice in compliance with applicable federal, state, county, and/or municipal laws, ordinances, regulations, rules and orders.

11. COMPENSATION AND PAYMENT.

In consideration for Contractor's complete performance of Services, City shall pay Contractor for all materials provided and services rendered by Contractor at the rate per

hour for labor and cost per unit for materials as outlined in Exhibit B, entitled "SCHEDULE OF FEES."

Contractor will bill City on a monthly basis for Services provided by Contractor during the preceding month, subject to verification by City. City will pay Contractor within thirty (30) days of City's receipt of invoice.

12. TERMINATION OF AGREEMENT.

Either Party may terminate this Agreement without cause by giving the other Party written notice ("Notice of Termination") which clearly expresses that Party's intent to terminate the Agreement. Notice of Termination shall become effective no less than thirty (30) calendar days after a Party receives such notice. After either Party terminates the Agreement, Contractor shall discontinue further services as of the effective date of termination, and City shall pay Contractor for all Services satisfactorily performed up to such date.

13. NO ASSIGNMENT OR SUBCONTRACTING OF AGREEMENT.

City and Contractor bind themselves, their successors and assigns to all covenants of this Agreement. This Agreement shall not be assigned or transferred without the prior written approval of City. Contractor shall not hire subcontractors without express written permission from City.

14. NO THIRD PARTY BENEFICIARY.

This Agreement shall not be construed to be an agreement for the benefit of any third party or parties and no third party or parties shall have any claim or right of action under this Agreement for any cause whatsoever.

15. INDEPENDENT CONTRACTOR.

Contractor and all person(s) employed by or contracted with Contractor to furnish labor and/or materials under this Agreement are independent contractors and do not act as agent(s) or employee(s) of City. Contractor has full rights, however, to manage its employees in their performance of Services under this Agreement. Contractor is not authorized to bind City to any contracts or other obligations.

16. NO PLEDGING OF CITY'S CREDIT.

Under no circumstances shall Contractor have the authority or power to pledge the credit of City or incur any obligation in the name of City. Contractor shall save and hold harmless the City, its City Council, its officers, employees, boards and commissions for expenses arising out of any unauthorized pledges of City's credit by Contractor under this Agreement.

17. CONFIDENTIALITY OF MATERIAL.

All ideas, memoranda, specifications, plans, manufacturing procedures, data, drawings, descriptions, documents, discussions or other information developed or received by or for Contractor and all other written information submitted to Contractor in connection with the performance of this Agreement shall be held confidential by Contractor and shall not, without the prior written consent of City, be used for any purposes other than the performance of the Services nor be disclosed to an entity not connected with performance of the Services. Nothing furnished to Contractor which is otherwise known to Contractor or becomes generally known to the related industry shall be deemed confidential.

18. USE OF CITY NAME OR EMBLEM.

Contractor shall not use City's name, insignia, or emblem, or distribute any information related to services under this Agreement in any magazine, trade paper, newspaper or other medium without express written consent of City.

19. OWNERSHIP OF MATERIAL.

All material, including information developed on computer(s), which shall include, but not be limited to, data, sketches, tracings, drawings, plans, diagrams, quantities, estimates, specifications, proposals, tests, maps, calculations, photographs, reports and other material developed, collected, prepared or caused to be prepared under this Agreement shall be the property of City but Contractor may retain and use copies thereof. City shall not be limited in any way or at any time in its use of said material. However, Contractor shall not be responsible for damages resulting from the use of said material for work other than Project, including, but not limited to, the release of this material to third parties.

20. RIGHT OF CITY TO INSPECT RECORDS OF CONTRACTOR.

City, through its authorized employees, representatives or agents shall have the right during the term of this Agreement and for three (3) years from the date of final payment for goods or services provided under this Agreement, to audit the books and records of Contractor for the purpose of verifying any and all charges made by Contractor in connection with Contractor compensation under this Agreement, including termination of Contractor. Contractor agrees to maintain sufficient books and records in accordance with generally accepted accounting principles to establish the correctness of all charges submitted to City. Any expenses not so recorded shall be disallowed by City.

Contractor shall submit to City any and all reports concerning its performance under this Agreement that may be requested by City in writing. Contractor agrees to assist City in meeting City's reporting requirements to the State and other agencies with respect to Contractor's Services hereunder.

21. CORRECTION OF SERVICES.

Contractor agrees to correct any incomplete, inaccurate or defective Services at no further costs to City, when such defects are due to the negligence, errors or omissions of Contractor.

22. FAIR EMPLOYMENT.

Contractor shall not discriminate against any employee or applicant for employment because of race, color, creed, national origin, gender, sexual orientation, age, disability, religion, ethnic background, or marital status, in violation of state or federal law.

23. HOLD HARMLESS/INDEMNIFICATION.

To the extent permitted by law, Contractor agrees to protect, defend, hold harmless and indemnify City, its City Council, commissions, officers, employees, volunteers and agents from and against any claim, injury, liability, loss, cost, and/or expense or damage, including all costs and reasonable attorney's fees in providing a defense to any claim arising therefrom, for which City shall become liable arising from Contractor's negligent, reckless or wrongful acts, errors, or omissions with respect to or in any way connected with the Services performed by Contractor pursuant to this Agreement.

24. INSURANCE REQUIREMENTS.

During the term of this Agreement, and for any time period set forth in Exhibit C, Contractor shall purchase and maintain in full force and effect, at no cost to City insurance policies with respect to employees and vehicles assigned to the Performance of Services under this Agreement with coverage amounts, required endorsements, certificates of insurance, and coverage verifications as defined in Exhibit C.

25. AMENDMENTS.

This Agreement may be amended only with the written consent of both Parties.

26. INTEGRATED DOCUMENT.

This Agreement represents the entire agreement between City and Contractor. No other understanding, agreements, conversations, or otherwise, with any representative of City prior to execution of this Agreement shall affect or modify any of the terms or obligations of this Agreement. Any verbal agreement shall be considered unofficial information and is not binding upon City.

27. SEVERABILITY CLAUSE.

In case any one or more of the provisions in this Agreement shall, for any reason, be held invalid, illegal or unenforceable in any respect, it shall not affect the validity of the other provisions, which shall remain in full force and effect.

28. WAIVER.

Contractor agrees that waiver by City of any one or more of the conditions of performance under this Agreement shall not be construed as waiver(s) of any other condition of performance under this Agreement.

29. NOTICES.

All notices to the Parties shall, unless otherwise requested in writing, be sent to City addressed as follows:

City of Santa Clara
Attention: Electric Department
1500 Warburton Avenue
Santa Clara, California 95050
or by facsimile at (408) 261-2717

And to Contractor addressed as follows:
Davey Tree Surgery Company
2617 South Vasco Road
Livermore, CA 94551-5015
or by facsimile at (925) 443-1751

If notice is sent via facsimile, a signed, hard copy of the material shall also be mailed. The workday the facsimile was sent shall control the date notice was deemed given if there is a facsimile machine generated document on the date of transmission. A facsimile transmitted after 1:00 p.m. on a Friday shall be deemed to have been transmitted on the following Monday.

30. CAPTIONS.

The captions of the various sections, paragraphs and subparagraphs of this Agreement are for convenience only and shall not be considered or referred to in resolving questions of interpretation.

31. LAW GOVERNING CONTRACT AND VENUE.

This Agreement shall be governed and construed in accordance with the statutes and laws of the State of California. The venue of any suit filed by either Party shall be vested in the state courts of the County of Santa Clara, or if appropriate, in the United States District Court, Northern District of California, San Jose, California.

32. DISPUTE RESOLUTION.

A. Unless otherwise mutually agreed to by the Parties, any controversies between Contractor and City regarding the construction or application of this Agreement, and claims arising out of this Agreement or its breach, shall be submitted to

mediation within thirty (30) days of the written request of one Party after the service of that request on the other Party.

B. The Parties may agree on one mediator. If they cannot agree on one mediator, the Party demanding mediation shall request the Superior Court of Santa Clara County to appoint a mediator. The mediation meeting shall not exceed one day (eight (8) hours). The Parties may agree to extend the time allowed for mediation under this Agreement.

C. The costs of mediation shall be borne by the Parties equally.

D. For any contract dispute, mediation under this section is a condition precedent to filing an action in any court. In the event of mediation which arises out of any dispute related to this Agreement, the Parties shall each pay their respective attorney's fees, expert witness costs and cost of suit through mediation only. In the event of litigation, the prevailing Party shall recover its reasonable costs of suit, expert's fees, and attorney's fees. If mediation does not resolve the dispute, the Parties agree that the matter shall be litigated in a court of law, and not subject to the arbitration provisions of the Public Contracts Code.

33. COMPLIANCE WITH ETHICAL STANDARDS.

Contractor shall:

A. Read Exhibit D, entitled "ETHICAL STANDARDS FOR CONTRACTORS SEEKING TO ENTER INTO AN AGREEMENT WITH THE CITY OF SANTA CLARA, CALIFORNIA"; and,

B. Execute Exhibit E, entitled "AFFIDAVIT OF COMPLIANCE WITH ETHICAL STANDARDS."

34. LIQUIDATED DAMAGES.

It is mutually agreed by Contractor and City that, in event completion of the Services to be provided by the Contractor under this Agreement is delayed beyond *[insert date], City will suffer damages and will incur other costs and expenses of a nature and amount which is difficult or impractical to determine. The Parties agree that by way of ascertaining and fixing the amount of damages, costs and expenses, and not by way of penalty, Contractor shall pay to City the sum of *[spell out dollar amount] ($*[insert numerical dollar amount]) per day in liquidated damages for each and every calendar day such delay in completion of said Services continues beyond *[insert date]. In the event that said liquidated damages are not paid, Contractor agrees that City may deduct the amount of said unpaid damages from any money due or that may become due to Contractor under this Agreement.

35. CONFLICT OF INTERESTS.

This Agreement does not prevent either Party from entering into similar agreements with other parties. To prevent a conflict of interest, Contractor certifies that to the best of its

knowledge, no City officer, employee or authorized representative has any financial interest in the business of Contractor and that no person associated with Contractor has any interest, direct or indirect, which could conflict with the faithful performance of this Agreement. Contractor is familiar with the provisions of California Government Code Section 87100 and following, and certifies that it does not know of any facts which would violate these code provisions. Contractor will advise City if a conflict arises.

36. PROGRESS SCHEDULE.

The Progress Schedule will be as set forth in the attached Exhibit F, entitled "MILESTONE SCHEDULE" if applicable.

The Parties acknowledge and accept the terms and conditions of this Agreement as evidenced by the following signatures of their duly authorized representatives. It is the intent of the Parties that this Agreement shall become operative on the Effective Date.

This Agreement may be executed in counterparts, each of which shall be deemed to be an original, but both of which shall constitute one and the same instrument; and, the Parties agree that signatures on this Agreement, including those transmitted by facsimile, shall be sufficient to bind the Parties.

CITY OF SANTA CLARA, CALIFORNIA
a chartered California municipal corporation

APPROVED AS TO FORM:

RICHARD E. NOSKY, JR.
City Attorney

ATTEST:

ROD DIRIDON, JR.
City Clerk

JULIO J. FUENTES
City Manager
1500 Warburton Avenue
Santa Clara, CA 95050
Telephone: (408) 615-2210
Fax: (408) 241-6771

"CITY"

DAVEY TREE SURGERY COMPANY
an Ohio corporation

By: _____
RICK EDSON
Title: Secretary/Business Manager
Address: P.O. Box 5015
Livermore, CA 94551
Telephone: (925) 443-1723
Fax: (925) 44-1751

"CONTRACTOR"

AGREEMENT FOR THE PERFORMANCE OF SERVICES
BY AND BETWEEN THE
CITY OF SANTA CLARA, CALIFORNIA,
AND
DAVEY TREE SURGERY COMPANY

EXHIBIT A

SCOPE OF SERVICES

The Services to be performed for the City by the Contractor under this Agreement are as follows:

Contractor shall provide supervision, labor, materials, equipment, and all tools on a time and materials basis to safely, properly, and promptly provide tree-trimming services for power line clearance as directed by the City of Santa Clara.

- on a daily basis Monday through Friday during normal working hours, as requested by City.

- On an after-hours, emergency basis within two hours of first notification from City that emergency service is required.

All power-line-clearance tree-trimming shall be performed in a manner designed to eliminate tree contact with power lines and to optimize clearance from high-voltage electrical equipment without damaging the structural integrity of the tree(s).

AGREEMENT FOR THE PERFORMANCE OF SERVICES
BY AND BETWEEN THE
CITY OF SANTA CLARA, CALIFORNIA,
AND
DAVEY TREE SURGERY COMPANY

EXHIBIT B

FEE SCHEDULE

In no event shall the amount billed to City by Contractor for services under this Agreement exceed two million nine hundred fifty seven thousand seventy seven dollars and thirty eight cents $2,957,077.38 over the three year term of this agreement, subject to budget appropriations.

Regular	$46.46
Overtime	$56.21
Double Time (Holiday or 12 hours/day)	$65.96

Year 1	$869,731.20
Year 2	$895,823.14
Year 3	$922,697.83
Emergency Services	$268,825.21

Years 2 and 3 reflect an anticipated contractual wage escalation between Contractor and bargaining unit.

AGREEMENT FOR THE PERFORMANCE OF SERVICES
BY AND BETWEEN THE
CITY OF SANTA CLARA, CALIFORNIA,
AND
DAVEY TREE SURGERY COMPANY

EXHIBIT C

INSURANCE REQUIREMENTS

Without limiting the Contractor's indemnification of the City, and prior to commencing any of the Services required under this Agreement, the Contractor shall purchase and maintain in full force and effect, at its sole cost and expense, the following insurance policies with at least the indicated coverages, provisions and endorsements:

A. COMMERCIAL GENERAL LIABILITY INSURANCE

1. Commercial General Liability Insurance policy which provides coverage at least as broad as Insurance Services Office form CG 00 01. Policy limits are subject to review, but shall in no event be less than, the following:

   $1,000,000 Each Occurrence
   $2,000,000 General Aggregate
   $2,000,000 Products/Completed Operations Aggregate
   $1,000,000 Personal Injury

2. Exact structure and layering of the coverage shall be left to the discretion of Contractor; however, any excess or umbrella policies used to meet the required limits shall be at least as broad as the underlying coverage and shall otherwise follow form.

3. The following provisions shall apply to the Commercial Liability policy as well as any umbrella policy maintained by the Contractor to comply with the insurance requirements of this Agreement:

   a. Coverage shall be on a "pay on behalf" basis with defense costs payable in addition to policy limits;

   b. There shall be no cross liability exclusion which precludes coverage for claims or suits by one insured against another; and

   c. Coverage shall apply separately to each insured against whom a claim is made or a suit is brought, except with respect to the limits of liability.

B. BUSINESS AUTOMOBILE LIABILITY INSURANCE

Business automobile liability insurance policy which provides coverage at least as broad as ISO form CA 00 01 with policy limits a minimum limit of not less than one million dollars ($1,000,000) each accident using, or providing coverage at least as broad as, Insurance Services Office form CA 00 01. Liability coverage shall apply to all owned, non-owned and hired autos.

In the event that the Work being performed under this Agreement involves transporting of hazardous or regulated substances, hazardous or regulated wastes and/or hazardous or regulated materials, Contractor and/or its subcontractors involved in such activities shall provide coverage with a limit of two million dollars ($2,000,000) per accident covering transportation of such materials by the addition to the Business Auto Coverage Policy of Environmental Impairment Endorsement MCS90 or Insurance Services Office endorsement form CA 99 48, which amends the pollution exclusion in the standard Business Automobile Policy to cover pollutants that are in or upon, being transported or towed by, being loaded onto, or being unloaded from a covered auto.

C. WORKERS' COMPENSATION

1. Workers' Compensation Insurance Policy as required by statute and employer's liability with limits of at least one million dollars ($1,000,000) policy limit Bodily Injury by disease, one million dollars ($1,000,000) each accident/Bodily Injury and one million dollars ($1,000,000) each employee Bodily Injury by disease.

2. The indemnification and hold harmless obligations of Contractor included in this Agreement shall not be limited in any way by any limitation on the amount or type of damage, compensation or benefit payable by or for Contractor or any subcontractor under any Workers' Compensation Act(s), Disability Benefits Act(s) or other employee benefits act(s).

3. This policy must include a Waiver of Subrogation in favor of the City of Santa Clara, its City Council, commissions, officers, employees, volunteers and agents.

D. COMPLIANCE WITH REQUIREMENTS

All of the following clauses and/or endorsements, or similar provisions, must be part of each commercial general liability policy, and each umbrella or excess policy.

1. Additional Insureds. City of Santa Clara, its City Council, commissions, officers, employees, volunteers and agents are hereby added as additional insureds in respect to liability arising out of Contractor's work for City, using Insurance Services Office (ISO) Endorsement CG 20 10 11 85 or the combination of CG 20 10 03 97 and CG 20 37 10 01, or its equivalent.

2. Primary and non-contributing. Each insurance policy provided by Contractor shall contain language or be endorsed to contain wording making it primary insurance as respects to, and not requiring contribution from, any other insurance which the

Indemnities may possess, including any self-insurance or self-insured retention they may have. Any other insurance Indemnities may possess shall be considered excess insurance only and shall not be called upon to contribute with Contractor's insurance.

3. Cancellation.

   a. Each insurance policy shall contain language or be endorsed to reflect that no cancellation or modification of the coverage provided due to non-payment of premiums shall be effective until written notice has been given to City at least ten (10) days prior to the effective date of such modification or cancellation. In the event of non-renewal, written notice shall be given at least ten (10) days prior to the effective date of non-renewal.

   b. Each insurance policy shall contain language or be endorsed to reflect that no cancellation or modification of the coverage provided for any cause save and except non-payment of premiums shall be effective until written notice has been given to City at least thirty (30) days prior to the effective date of such modification or cancellation. In the event of non-renewal, written notice shall be given at least thirty (30) days prior to the effective date of non-renewal.

4. Other Endorsements. Other endorsements may be required for policies other than the commercial general liability policy if specified in the description of required insurance set forth in Sections A through D of this Exhibit C, above.

E. ADDITIONAL INSURANCE RELATED PROVISIONS

Contractor and City agree as follows:

1. Contractor agrees to ensure that subcontractors, and any other party involved with the Services who is brought onto or involved in the performance of the Services by Contractor, provide the same minimum insurance coverage required of Contractor, except as with respect to limits. Contractor agrees to monitor and review all such coverage and assumes all responsibility for ensuring that such coverage is provided in conformity with the requirements of this Agreement. Contractor agrees that upon request by City, all agreements with, and insurance compliance documents provided by, such subcontractors and others engaged in the project will be submitted to City for review.

2. Contractor agrees to be responsible for ensuring that no contract used by any party involved in any way with the project reserves the right to charge City or Contractor for the cost of additional insurance coverage required by this Agreement. Any such provisions are to be deleted with reference to City. It is not the intent of City to reimburse any third party for the cost of complying with these requirements. There shall be no recourse against City for payment of premiums or other amounts with respect thereto.

3. The City reserves the right to withhold payments from the Contractor in the event of material noncompliance with the insurance requirements set forth in this Agreement.

F. EVIDENCE OF COVERAGE

Prior to commencement of any Services under this Agreement, Contractor, and each and every subcontractor (of every tier) shall, at its sole cost and expense, purchase and maintain not less than the minimum insurance coverage with the endorsements and deductibles indicated in this Agreement. Such insurance coverage shall be maintained with insurers, and under forms of policies, satisfactory to City and as described in this Agreement. Contractor shall file with the City all certificates and endorsements for the required insurance policies for City's approval as to adequacy of the insurance protection.

G. EVIDENCE OF COMPLIANCE

Contractor or its insurance broker shall provide the required proof of insurance compliance, consisting of Insurance Services Office (ISO) endorsement forms or their equivalent and the ACORD form 25-S certificate of insurance (or its equivalent), evidencing all required coverage shall be delivered to City, or its representative as set forth below, at or prior to execution of this Agreement. Upon City's request, Contractor shall submit to City copies of the actual insurance policies or renewals or replacements. Unless otherwise required by the terms of this Agreement, all certificates, endorsements, coverage verifications and other items required to be delivered to City pursuant to this Agreement shall be mailed to:

City of Santa Clara Electric Department
c/o EBIX Inc.
P.O. 12010-S2 or 151 North Lyon Avenue
Hemet, CA 92546-8010 Hemet, CA 92543

Telephone number: 951-766-2280
Fax number: 770-325-0409
Email address: ctsantaclara@ebix.com

H. QUALIFYING INSURERS

All of the insurance companies providing insurance for Contractor shall have, and provide written proof of, an A. M. Best rating of at least A minus 6 (A- VI) or shall be an insurance company of equal financial stability that is approved by the City or its insurance compliance representatives.

AGREEMENT FOR THE PERFORMANCE OF SERVICES
BY AND BETWEEN THE
CITY OF SANTA CLARA, CALIFORNIA,
AND
DAVEY TREE SURGERY COMPANY

EXHIBIT D

ETHICAL STANDARDS FOR CONTRACTORS SEEKING TO ENTER INTO AN AGREEMENT WITH THE CITY OF SANTA CLARA, CALIFORNIA

Termination of Agreement for Certain Acts.

I. The City may, at its sole discretion, terminate this Agreement in the event any one or more of the following occurs:

1. If a Contractor[1] does any of the following:

a. Is convicted[2] of operating a business in violation of any Federal, State or local law or regulation;

b. Is convicted of a crime punishable as a felony involving dishonesty[3];

c. Is convicted of an offense involving dishonesty or is convicted of fraud or a criminal offense in connection with: (1) obtaining; (2) attempting to obtain; or, (3) performing a public contract or subcontract;

d. Is convicted of any offense which indicates a lack of business integrity or business honesty which seriously and directly affects the present responsibility of a City contractor or subcontractor; and/or,

e. Made (or makes) any false statement(s) or representation(s) with respect to this Agreement.

---

[1] For purposes of this Agreement, the word "Consultant" (whether a person or a legal entity) also refers to "Contractor" and means any of the following: an owner or co-owner of a sole proprietorship; a person who controls or who has the power to control a business entity; a general partner of a partnership; a principal in a joint venture; or a primary corporate stockholder [i.e., a person who owns more than ten percent (10%) of the outstanding stock of a corporation] and who is active in the day to day operations of that corporation.

[2] For purposes of this Agreement, the words "convicted" or "conviction" mean a judgment or conviction of a criminal offense by any court of competent jurisdiction, whether entered upon a verdict or a plea, and includes a conviction entered upon a plea of nolo contendere within the past five (5) years.

[3] As used herein, "dishonesty" includes, but is not limited to, embezzlement, theft, forgery, bribery, falsification or destruction of records, making false statements, failure to pay tax obligations, receiving stolen property, collusion or conspiracy.

2. If fraudulent, criminal or other seriously improper conduct of any officer, director, shareholder, partner, employee or other individual associated with the Contractor can be imputed to the Contractor when the conduct occurred in connection with the individual's performance of duties for or on behalf of the Contractor, with the Contractor's knowledge, approval or acquiescence, the Contractor's acceptance of the benefits derived from the conduct shall be evidence of such knowledge, approval or acquiescence.

J. The City may also terminate this Agreement in the event any one or more of the following occurs:

1. The City determines that Contractor no longer has the financial capability[4] or business experience[5] to perform the terms of, or operate under, this Agreement; or,

2. If City determines that the Contractor fails to submit information, or submits false information, which is required to perform or be awarded a contract with City, including, but not limited to, Contractor's failure to maintain a required State issued license, failure to obtain a City business license (if applicable) or failure to purchase and maintain bonds and/or insurance policies required under this Agreement.

K. In the event a prospective Contractor (or bidder) is ruled ineligible (debarred) to participate in a contract award process or a contract is terminated pursuant to these provisions, Contractor may appeal the City's action to the City Council by filing a written request with the City Clerk within ten (10) days of the notice given by City to have the matter heard. The matter will be heard within thirty (30) days of the filing of the appeal request with the City Clerk. The Contractor will have the burden of proof on the appeal. The Contractor shall have the opportunity to present evidence, both oral and documentary, and argument.

---

[4] Contractor becomes insolvent, transfers assets in fraud of creditors, makes an assignment for the benefit of creditors, files a petition under any section or chapter of the federal Bankruptcy Code (11 U.S.C.), as amended, or under any similar law or statute of the United States or any state thereof, is adjudged bankrupt or insolvent in proceedings under such laws, or a receiver or trustee is appointed for all or substantially all of the assets of Contractor.

[5] Loss of personnel deemed essential by the City for the successful performance of the obligations of the Contractor to the City.

AGREEMENT FOR THE PERFORMANCE OF SERVICES
BY AND BETWEEN THE
CITY OF SANTA CLARA, CALIFORNIA,
AND
DAVEY TREE SURGERY COMPANY

EXHIBIT E

AFFIDAVIT OF COMPLIANCE WITH ETHICAL STANDARDS

I, Rick Edson, being first duly sworn, depose and state I am Secretary/Business Manager of Davey Tree Surgery Company and I hereby state that I have read and understand the language, entitled "Ethical Standards" set forth in Exhibit D. I have the authority to make these representations on my own behalf or on behalf of the legal entity identified herein. I have examined appropriate business records, and I have made appropriate inquiry of those individuals potentially included within the definition of "Contractor" contained in Ethical Standards at footnote 1.

Based on my review of the appropriate documents and my good-faith review of the necessary inquiry responses, I hereby state that neither the business entity nor any individual(s) belonging to said "Contractor" category [i.e., owner or co-owner of a sole proprietorship, general partner, person who controls or has power to control a business entity, etc.] has been convicted of any one or more of the crimes identified in the Ethical Standards within the past five (5) years.

The above assertions are true and correct and are made under penalty of perjury under the laws of the State of California.

DAVEY TREE SURGERY COMPANY
an Ohio corporation

By: Richard L Edson

Name: RICK EDSON
Title: Secretary/Business Manager

NOTARY'S ACKNOWLEDGMENT TO BE ATTACHED

Please execute the affidavit and attach a notary public's acknowledgment of execution of the affidavit by the signatory. If the affidavit is on behalf of a corporation, partnership, or other legal entity, the entity's complete legal name and the title of the person signing on behalf of the legal entity shall appear above. Written evidence of the authority of the person executing this affidavit on behalf of a corporation, partnership, joint venture, or any other legal entity, other than a sole proprietorship, shall be attached.

CALIFORNIA ALL-PURPOSE ACKNOWLEDGMENT

State of California

County of Alameda

On June 12, 2014 (Date) before me, Rita A. Packard - Notary Public (Here Insert Name and Title of the Officer),

personally appeared Richard L. Edson (Name(s) of Signer(s)),

who proved to me on the basis of satisfactory evidence to be the person(s) whose name(s) is/~~are~~ subscribed to the within instrument and acknowledged to me that he/~~she/they~~ executed the same in his/~~her/their~~ authorized capacity(~~ies~~), and that by his/~~her/their~~ signature(~~s~~) on the instrument the person(~~s~~), or the entity upon behalf of which the person(~~s~~) acted, executed the instrument.

I certify under PENALTY OF PERJURY under the laws of the State of California that the foregoing paragraph is true and correct.

WITNESS my hand and official seal.

Signature Rita A. Packard (Signature of Notary Public)

RITA A. PACKARD
Commission # 2029641
Notary Public - California
Alameda County
My Comm. Expires Jul 17, 2017

Place Notary Seal Above

OPTIONAL

Though the information below is not required by law, it may prove valuable to persons relying on the document and could prevent fraudulent removal and reattachment of this form to another document.

Description of Attached Document

Title or Type of Document: Agreement for the Performance of Services By and Between the City of Santa Clara, CA & Davey Tree Surgery Co. Exhibit E Affidavit of Compliance with Ethical Standards

Document Date: n/a Number of Pages: 1

Signer(s) Other Than Named Above: n/a

Capacity(~~ies~~) Claimed by Signer(~~s~~)

Signer's Name: Richard L. Edson
- ☐ Individual
- ☐ Corporate Officer — Title(s):
- ☐ Partner — ☐ Limited ☐ General
- ☐ Attorney in Fact
- ☐ Trustee
- ☐ Guardian or Conservator
- ☒ Other: Secretary/ Business Manager

Signer Is Representing: Davey Tree Surgery Co.

RIGHT THUMBPRINT OF SIGNER
Top of thumb here

Signer's Name: n/a
- ☐ Individual
- ☐ Corporate Officer — Title(s):
- ☐ Partner — ☐ Limited ☐ General
- ☐ Attorney in Fact
- ☐ Trustee
- ☐ Guardian or Conservator
- ☐ Other:

Signer Is Representing:

RIGHT THUMBPRINT OF SIGNER
Top of thumb here

©2007 National Notary Association • 9350 De Soto Ave., P.O. Box 2402 • Chatsworth, CA 91313-2402 • www.NationalNotary.org Item #5907 Reorder: Call Toll-Free 1-800-876-6827

ORGANIZATIONAL MEETING
DIRECTORS
DAVEY TREE SURGERY COMPANY
July 19, 2013

The Directors met to elect officers and discuss other matters of business. Directors present: Karl J. Warnke; Lawrence S. Abernathy, David E. Adante; Patrick M. Covey; Steven A. Marshall. Also present: Joseph R. Paul. Mr. Evans was excused from the meeting.

Mr. Warnke presided; Mr. Paul acted as Secretary.

The Minutes of the meeting of October 2, 2012, were approved as presented.

On motion made, seconded and carried, Karl J. Warnke was elected Chairman for the ensuing year.

On motion made, seconded and carried, the following officers were elected for the ensuing year:

Chairman, President & Chief Executive Officer	Karl J. Warnke
Chief Operating Officer	Patrick M. Covey
Chief Financial Officer	Joseph R. Paul
Executive Vice President	Steven A. Marshall
Vice President & General Manager	Lawrence S. Abernathy
Senior Vice President, Operations	Larry R. Evans
Vice President, Finance	Emil E. Stahli
Chief Accounting Officer	Nicholas R. Sucic
Secretary	Richard L. Edson
Treasurer	Christopher J. Bast
Assistant Secretary	Marjorie L. Conner

Resolutions which had been prepared and circulated in advance, covering items necessary to the orderly functioning of the Company, were discussed and properly adopted, as amended, and ordered affixed to the Minutes of the meeting.

There being no further business, the meeting was adjourned.

Acting Secretary

AGREEMENT FOR THE PERFORMANCE OF SERVICES
BY AND BETWEEN THE
CITY OF SANTA CLARA, CALIFORNIA,
AND
DAVEY TREE SURGERY COMPANY

EXHIBIT F

MILESTONE SCHEDULE

(Not Applicable)

Meeting Date: 7/1/14

AGENDA REPORT

City of Santa Clara, California

Agenda Item # 6B-9

Santa Clara All-America City 2001

Date: June 17, 2014

To: City Manager for Council Action

From: Director of Electric Utility

Subject: Approval of an Agreement for Professional Services with Harris & Associates, Inc., for Program and Construction Management Services

EXECUTIVE SUMMARY:

The Santa Clara Electric Department, Silicon Valley Power (SVP) is undertaking a significant capital construction program for electric transmission, substation and distribution facilities over the next two to three years. Some of the major projects include the construction of the Fairview Substation Project 2403, the Raymond Substation Storage building Project 2129, and Security Fence construction around Northern Receiving Station by the stadium. These Projects are currently in the bidding and construction phase. SVP issued an RFP for this work in February 2014. The RFP was posted on the City's website, libraries and to ten (10) consulting firms that were known to have experience and expertise in Project and Construction Management. The proposals were reviewed against a comprehensive scorecard for each specific area of the RFP. Each proposal was ranked on technical qualifications first and then on a normalized economic scale. Harris & Associates, Inc. is the number one choice as the most responsive firm to the RFP.

Staff proposes to enter into a Professional Service Agreement with Harris & Associates, Inc. to provide project management services for the next three years. A copy of the Agreement for Professional Services with Harris & Associates, Inc. is available for review in the Council Offices.

ADVANTAGES AND DISADVANTAGES OF ISSUE:

Approval of this Agreement for Professional Services with Harris & Associates, Inc. will enable SVP to continue the coordination, scheduling and project management services for various Electric Department construction projects.

ECONOMIC/FISCAL IMPACT:

The total cost of the Agreement for Professional Services over a three year period will not exceed $2,526,411.00. SVP anticipates spending $842,411.00 in the first year of this agreement, with sufficient funds available in 591-1361-80300-2xxx, for work on Capital Improvement Projects 2129—Raymond Substation, 2403—Fairview Substation, and 2008—Substation Capital Maintenance and Betterments, to cover the first year of this agreement. It is also anticipated that other projects may arise during the first year of the agreement that will require the assignment of additional CIP project accounts and the department will provide a Work Order to Finance, approved by the Director of Electric Utility, seeking certification of funds for other projects, not to exceed $842,411.00.

The remaining two years of the Agreement for Professional Services will be subject to future appropriations through the budget process.

RECOMMENDATION:
That Council approve, and authorize the City Manager to execute, an Agreement for Professional Services with Harris & Associates, Inc., in an amount not to exceed $842,411.00 for the first year of the Agreement, and a total not to exceed $2,526,411.00, to provide program and construction management services.

John C. Roukema
Director of Electric Utility

Certified as to Availability of Funds:
591-1361-80100-2xxx $842,411.00

Gary Ameling
Director of Finance

APPROVED:

Julio J. Fuentes
City Manager

MAJORITY VOTE OF COUNCIL

Documents Related to this Report:

1) ***Agreement for Professional Services with Harris & Associates***

AGREEMENT FOR PROFESSIONAL SERVICES BY AND BETWEEN THE CITY OF SANTA CLARA, CALIFORNIA AND HARRIS & ASSOCIATES, INC.

PREAMBLE

This agreement for the performance of services ("Agreement") is made and entered into on this _____ day of _____, 2014, ("Effective Date") by and between Harris & Associates, Inc., a California corporation, with its principal place of business located at 1401 Willow Pass Road, Suite 500, Concord, CA 94520 ("Contractor"), and the City of Santa Clara, California, a chartered California municipal corporation with its primary business address at 1500 Warburton Avenue, Santa Clara, California 95050 ("City"). City and Contractor may be referred to individually as a "Party" or collectively as the "Parties" or the "Parties to this Agreement."

RECITALS

A. City desires to secure professional services more fully described in this Agreement, at Exhibit A, entitled "SCOPE OF SERVICES"; and

B. Contractor represents that it, and its subcontractors, if any, have the professional qualifications, expertise, necessary licenses and desire to provide certain goods and/or required services of the quality and type which meet objectives and requirements of City; and,

C. The Parties have specified herein the terms and conditions under which such services will be provided and paid for.

The Parties agree as follows:

AGREEMENT PROVISIONS

1. SERVICES TO BE PROVIDED.

Except as specified in this Agreement, Contractor shall furnish all technical and professional services, including labor, material, equipment, transportation, supervision and expertise (collectively referred to as "Services") to satisfactorily complete the work required by City at his/her own risk and expense. Services to be provided to City are more fully described in Exhibit A entitled "SCOPE OF SERVICES." All of the exhibits referenced in this Agreement are attached and are incorporated by this reference. Contractor acknowledges that the execution of this Agreement by City is predicated upon representations made by Contractor in that certain document entitled Proposal to provide Program Management and Construction Management Services" dated May 9, 2014, ("Proposal") set forth in Exhibit A, which constitutes the basis for this Agreement.

2. TERM OF AGREEMENT.

Unless otherwise set forth in this Agreement or unless this paragraph is subsequently modified by a written amendment to this Agreement, the term of this Agreement shall begin on the Effective Date of this Agreement and terminate at the end of the day three (3) years from the Effective Date.

3. CONTRACTOR'S SERVICES TO BE APPROVED BY A LICENSED PROFESSIONAL.

A. All reports, costs estimates, plans and other documentation which may be submitted or furnished by Contractor shall be approved and signed by a qualified licensed professional in the State of California.

B. The title sheet for specifications and reports, and each sheet of plans, shall bear the professional seal, certificate number, registration classification, expiration date of certificate and signature of the professional responsible for their preparation.

4. QUALIFICATIONS OF CONTRACTOR - STANDARD OF WORKMANSHIP.

Contractor represents and maintains that it has the necessary expertise in the professional calling necessary to perform services, and its duties and obligations, expressed and implied, contained herein, and City expressly relies upon Contractor's representations regarding its skills and knowledge. Contractor shall perform such services and duties in conformance to and consistent with the professional standards of a specialist in the same discipline in the State of California.

The plans, designs, specifications, estimates, calculations, reports and other documents furnished under Exhibit A shall be of a quality acceptable to City. The criteria for acceptance of the work provided under this Agreement shall be a product of neat appearance, well organized, that is technically and grammatically correct, checked and having the maker and checker identified. The minimum standard of appearance, organization and content of the drawings shall be that used by City for similar projects.

5. MONITORING OF SERVICES.

City may monitor the Services performed under this Agreement to determine whether Contractor's operation conforms to City policy and to the terms of this Agreement. City may also monitor the Services to be performed to determine whether financial operations are conducted in accord with applicable City, county, state, and federal requirements. If any action of Contractor constitutes a breach, City may terminate this Agreement pursuant to the provisions described herein.

6. WARRANTY.

Contractor expressly warrants that all materials and services covered by this Agreement shall be fit for the purpose intended, shall be free from defect, and shall conform to the specifications, requirements, and instructions upon which this Agreement is based.

Contractor agrees to promptly replace or correct any incomplete, inaccurate, or defective Services at no further cost to City when defects are due to the negligence, errors or omissions of Contractor. If Contractor fails to promptly correct or replace materials or services, City may make corrections or replace materials or services and charge Contractor for the cost incurred by City.

7. PERFORMANCE OF SERVICES.

Contractor shall perform all requested services in an efficient and expeditious manner and shall work closely with and be guided by City. Contractor shall be as fully responsible to City for the acts and omissions of its subcontractors, and of persons either directly or indirectly employed by them, as Contractor is for the acts and omissions of persons directly employed by it. Contractor will perform all Services in a safe manner and in accordance with all federal, state and local operation and safety regulations.

8. RESPONSIBILITY OF CONTRACTOR.

Contractor shall be responsible for the professional quality, technical accuracy and coordination of the Services furnished by it under this Agreement. Neither City's review, acceptance, nor payments for any of the Services required under this Agreement shall be construed to operate as a waiver of any rights under this Agreement or of any cause of action arising out of the performance of this Agreement and Contractor shall be and remain liable to City in accordance with applicable law for all damages to City caused by Contractor's negligent performance of any of the Services furnished under this Agreement.

Any acceptance by City of plans, specifications, construction contract documents, reports, diagrams, maps and other material prepared by Contractor shall not in any respect absolve Contractor from the responsibility Contractor has in accordance with customary standards of good professional practice in compliance with applicable federal, state, county, and/or municipal laws, ordinances, regulations, rules and orders.

9. COMPENSATION AND PAYMENT.

In consideration for Contractor's complete performance of Services, City shall pay Contractor for all materials provided and services rendered by Contractor at the rate per hour for labor and cost per unit for materials as outlined in Exhibit B, entitled "SCHEDULE OF FEES."

Contractor will bill City on a monthly basis for Services provided by Contractor during the preceding month, subject to verification by City. City will pay Contractor within thirty (30) days of City's receipt of invoice.

10. PROGRESS SCHEDULE.

The Progress Schedule will be as set forth in the attached Exhibit F, entitled "MILESTONE SCHEDULE" if applicable.

11. TERMINATION OF AGREEMENT.

Either Party may terminate this Agreement without cause by giving the other Party written notice ("Notice of Termination") which clearly expresses that Party's intent to terminate the Agreement. Notice of Termination shall become effective no less than thirty (30) calendar days after a Party receives such notice. After either Party terminates the Agreement, Contractor shall discontinue further services as of the effective date of termination, and City shall pay Contractor for all Services satisfactorily performed up to such date.

12. NO ASSIGNMENT OR SUBCONTRACTING OF AGREEMENT.

City and Contractor bind themselves, their successors and assigns to all covenants of this Agreement. This Agreement shall not be assigned or transferred without the prior written approval of City. Contractor shall not hire subcontractors without express written permission from City.

13. NO THIRD PARTY BENEFICIARY.

This Agreement shall not be construed to be an agreement for the benefit of any third party or parties and no third party or parties shall have any claim or right of action under this Agreement for any cause whatsoever.

14. INDEPENDENT CONTRACTOR.

Contractor and all person(s) employed by or contracted with Contractor to furnish labor and/or materials under this Agreement are independent contractors and do not act as agent(s) or employee(s) of City. Contractor has full rights, however, to manage its employees in their performance of Services under this Agreement. Contractor is not authorized to bind City to any contracts or other obligations.

15. NO PLEDGING OF CITY'S CREDIT.

Under no circumstances shall Contractor have the authority or power to pledge the credit of City or incur any obligation in the name of City. Contractor shall save and hold harmless the City, its City Council, its officers, employees, boards and commissions for expenses arising out of any unauthorized pledges of City's credit by Contractor under this Agreement.

16. CONFIDENTIALITY OF MATERIAL.

All ideas, memoranda, specifications, plans, manufacturing procedures, data, drawings, descriptions, documents, discussions or other information developed or received by or for Contractor and all other written information submitted to Contractor in connection with the performance of this Agreement shall be held confidential by Contractor and shall not, without the prior written consent of City, be used for any purposes other than the performance of the Services, nor be disclosed to an entity not connected with performance of the Services. Nothing furnished to Contractor which is otherwise known

to Contractor or becomes generally known to the related industry shall be deemed confidential.

17. USE OF CITY NAME OR EMBLEM.

Contractor shall not use City's name, insignia, or emblem, or distribute any information related to services under this Agreement in any magazine, trade paper, newspaper or other medium without express written consent of City.

18. OWNERSHIP OF MATERIAL.

All material, including information developed on computer(s), which shall include, but not be limited to, data, sketches, tracings, drawings, plans, diagrams, quantities, estimates, specifications, proposals, tests, maps, calculations, photographs, reports and other material developed, collected, prepared or caused to be prepared under this Agreement shall be the property of City but Contractor may retain and use copies thereof. City shall not be limited in any way or at any time in its use of said material. However, Contractor shall not be responsible for damages resulting from the use of said material for work other than Project, including, but not limited to, the release of this material to third parties.

19. RIGHT OF CITY TO INSPECT RECORDS OF CONTRACTOR.

City, through its authorized employees, representatives or agents shall have the right during the term of this Agreement and for three (3) years from the date of final payment for goods or services provided under this Agreement, to audit the books and records of Contractor for the purpose of verifying any and all charges made by Contractor in connection with Contractor compensation under this Agreement, including termination of Contractor. Contractor agrees to maintain sufficient books and records in accordance with generally accepted accounting principles to establish the correctness of all charges submitted to City. Any expenses not so recorded shall be disallowed by City.

Contractor shall submit to City any and all reports concerning its performance under this Agreement that may be requested by City in writing. Contractor agrees to assist City in meeting City's reporting requirements to the State and other agencies with respect to Contractor's Services hereunder.

20. CORRECTION OF SERVICES.

Contractor agrees to correct any incomplete, inaccurate or defective Services at no further costs to City, when such defects are due to the negligence, errors or omissions of Contractor.

21. FAIR EMPLOYMENT.

Contractor shall not discriminate against any employee or applicant for employment because of race, color, creed, national origin, gender, sexual orientation, age, disability, religion, ethnic background, or marital status, in violation of state or federal law.

22. HOLD HARMLESS/INDEMNIFICATION.

To the extent permitted by law, Contractor agrees to protect, defend, hold harmless and indemnify City, its City Council, commissions, officers, employees, volunteers and agents from and against any claim, injury, liability, loss, cost, and/or expense or damage ("Claim"), including all costs and reasonable attorney's fees in providing a defense to any such Claim which to the extent arises out of, pertains to or relates to the negligence, recklessness or willful misconduct of the Contractor in the prosecution of the work pursuant to this Agreement.

23. INSURANCE REQUIREMENTS.

During the term of this Agreement, and for any time period set forth in Exhibit C, Contractor shall purchase and maintain in full force and effect, at no cost to City insurance policies with respect to employees and vehicles assigned to the Performance of Services under this Agreement with coverage amounts, required endorsements, certificates of insurance, and coverage verifications as defined in Exhibit C.

24. AMENDMENTS.

This Agreement may be amended only with the written consent of both Parties.

25. INTEGRATED DOCUMENT.

This Agreement represents the entire agreement between City and Contractor. No other understanding, agreements, conversations, or otherwise, with any representative of City prior to execution of this Agreement shall affect or modify any of the terms or obligations of this Agreement. Any verbal agreement shall be considered unofficial information and is not binding upon City.

26. SEVERABILITY CLAUSE.

In case any one or more of the provisions in this Agreement shall, for any reason, be held invalid, illegal or unenforceable in any respect, it shall not affect the validity of the other provisions, which shall remain in full force and effect.

27. WAIVER.

Contractor agrees that waiver by City of any one or more of the conditions of performance under this Agreement shall not be construed as waiver(s) of any other condition of performance under this Agreement.

28. NOTICES.

All notices to the Parties shall, unless otherwise requested in writing, be sent to City addressed as follows:

City of Santa Clara
Attention: Electric Department
1500 Warburton Avenue
Santa Clara, California 95050
or by facsimile at (408) 261-2717

And to Contractor addressed as follows:
Harris & Associates, Inc.
1401 Willow Pass Road
Suite 500
Concord, CA 94520
or by facsimile at (925) 827-2956

If notice is sent via facsimile, a signed, hard copy of the material shall also be mailed. The workday the facsimile was sent shall control the date notice was deemed given if there is a facsimile machine generated document on the date of transmission. A facsimile transmitted after 1:00 p.m. on a Friday shall be deemed to have been transmitted on the following Monday.

29. CAPTIONS.

The captions of the various sections, paragraphs and subparagraphs of this Agreement are for convenience only and shall not be considered or referred to in resolving questions of interpretation.

30. LAW GOVERNING CONTRACT AND VENUE.

This Agreement shall be governed and construed in accordance with the statutes and laws of the State of California. The venue of any suit filed by either Party shall be vested in the state courts of the County of Santa Clara, or if appropriate, in the United States District Court, Northern District of California, San Jose, California.

31. DISPUTE RESOLUTION.

A. Unless otherwise mutually agreed to by the Parties, any controversies between Contractor and City regarding the construction or application of this Agreement, and claims arising out of this Agreement or its breach, shall be submitted to mediation within thirty (30) days of the written request of one Party after the service of that request on the other Party.

B. The Parties may agree on one mediator. If they cannot agree on one mediator, the Party demanding mediation shall request the Superior Court of Santa Clara County to appoint a mediator. The mediation meeting shall not exceed one day

(eight (8) hours). The Parties may agree to extend the time allowed for mediation under this Agreement.

C. The costs of mediation shall be borne by the Parties equally.

D. For any contract dispute, mediation under this section is a condition precedent to filing an action in any court. In the event of mediation which arises out of any dispute related to this Agreement, the Parties shall each pay their respective attorney's fees, expert witness costs and cost of suit, through mediation only. In the event of litigation, the prevailing party shall recover its reasonable costs of suit, expert's fees and attorney's fees.

32. COMPLIANCE WITH ETHICAL STANDARDS.

Contractor shall:

A. Read Exhibit D, entitled "ETHICAL STANDARDS FOR CONTRACTORS SEEKING TO ENTER INTO AN AGREEMENT WITH THE CITY OF SANTA CLARA, CALIFORNIA"; and,

B. Execute Exhibit E, entitled "AFFIDAVIT OF COMPLIANCE WITH ETHICAL STANDARDS."

(Continued on Page 9 of 9)

///

///

///

///

///

///

///

33. CONFLICT OF INTERESTS.

This Agreement does not prevent either Party from entering into similar agreements with other parties. To prevent a conflict of interest, Contractor certifies that to the best of its knowledge, no City officer, employee or authorized representative has any financial interest in the business of Contractor and that no person associated with Contractor has any interest, direct or indirect, which could conflict with the faithful performance of this Agreement. Contractor is familiar with the provisions of California Government Code Section 87100 and following, and certifies that it does not know of any facts which would violate these code provisions. Contractor will advise City if a conflict arises.

This Agreement may be executed in counterparts, each of which shall be deemed to be an original, but both of which shall constitute one and the same instrument; and, the Parties agree that signatures on this Agreement, including those transmitted by facsimile, shall be sufficient to bind the Parties.

The Parties acknowledge and accept the terms and conditions of this Agreement as evidenced by the following signatures of their duly authorized representatives. It is the intent of the Parties that this Agreement shall become operative on the Effective Date.

CITY OF SANTA CLARA, CALIFORNIA
a chartered California municipal corporation

APPROVED AS TO FORM:

RICHARD E. NOSKY, JR.
City Attorney

ATTEST:

ROD DIRIDON, JR.
City Clerk

JULIO J. FUENTES
City Manager
1500 Warburton Avenue
Santa Clara, CA 95050
Telephone: (408) 615-2210
Fax: (408) 241-6771

"CITY"

HARRIS & ASSOCIATES, INC.
a California corporation

By: _____
GARY S. WOHL
Title: CFO/COO
Address: 1401 Willow Pass Road, Suite 500
Concord, CA 94520
Telephone: (925) 827-4900
Fax: (925) 827-2956

"CONTRACTOR"

AGREEMENT FOR PROFESSIONAL SERVICES
BY AND BETWEEN THE
CITY OF SANTA CLARA, CALIFORNIA
AND
HARRIS & ASSOCIATES, INC.

EXHIBIT A

SCOPE OF SERVICES

The Services to be performed for the City by the Contractor under this Agreement are to be provided to the City's satisfaction and by the time and budget as specified by the City. All materials, costs and expenses shall be included by Contractor within budgeted amount as pre-approved by City.

The Services to be performed are described in the Contractor's proposal entitled, "Proposal to Provide Program and Construction Management Services (Proposal No. 131-0154)" dated May 9, 2014, which is attached to this Exhibit A.

May 9, 2014

Mr. Kevin Keating
City of Santa Clara – Electric Department
1500 Warburton Ave.
Santa Clara, CA 95050

Subject: Fee Proposal to provide Program Management and Construction Management Services (Proposal No. 131-0154)

Dear Kevin:
Harris & Associates is pleased to provide this proposal to provide Program Management, Construction Management and Civil Design services. These services will be provided under the Call Agreement to be executed concurrently with the Call.

Services to be Provided:
The services may include, but are not limited to, Program Management Construction Management and Civil Design services for the Substation Capacity Program. Tasks include: Project Management and Construction Management for substation projects, procurement, scheduling, coordinating the assembly of the bid documents, preparing agenda reports, coordination with the onsite contractor, coordinating testing and inspection, reviewing submittals, review pay applications, preparing SWPPP reports, uploading information to the State website and coordination with various City departments.

Term of the Agreement
The term of the agreement shall be from the effective date of the agreement to June 30, 2017.

Amount of the Agreement
Harris & Associates will provide these services listed above and with the staff proposed on the attached for $2,526,411. The assumptions of hours and rates are also attached. It is assumed that the budget will run concurrently with the term of the agreement.

Please do not hesitate to call me or Rocco Colicchia, should you have any questions regarding this proposal.

Sincerely,
Harris & Associates

Christopher Dunne
Practice Leader – Construction Management

Rocco Colicchia
Project Manager

Scope of Work for SVP projects

Raymond Storage Building

Provide Onsite Representative services for the construction of the Raymond storage building. Services to include: working with the contractor to coordinate work within the substation, managing the submittal process, coordinating questions from the contractor, scheduling inspections, coordinating with City departments, review and manage change orders, and provide project documentation.

Fairview Substation

Provide Project Management and Onsite Representative services for the Fairview Substation project. Work with SVP and MTH on material procurements, RFP's for services, agenda reports to Council, contract preparation, bid award support, work with the contractor on the project construction, manage the submittal process, coordinate questions from the contractor, schedule inspections, coordinate with City departments, review and manage change orders, review and manage pay applications, and provide project documentation.

Serra-Brokaw Reconductoring

Provide Project Management services for the Serra-Brokaw Reconductoring project. Work with SVP and ECI on material procurements, work with environmental consultant on the Negative declaration, prepare RFP's for services, agenda reports to Council, contract preparation, bid award support, work with the contractor and SVP inspector on the project construction, manage the submittal process, coordinate questions from the contractor, schedule inspections, coordinate with City departments, review and manage change orders, review and manage pay applications, and provide project documentation.

Update Engineering Standard Documents

Review SVP standard details and update to a consistent format. Create new documents as requested and based on lessoned learned from prior construction projects.

NRS Fence

Create plans and specifications to replace and add security fencing behind the NRS Substation, Gianera Cogeneration, the Santa Clara Water tanks and the San Francisco Water Department property. Replace existing cyclone fence with either an anti-climb steel fence or a small mesh cyclone fence. Coordinate plans with Santa Clara Electric Departments. Work to clarify ingress/egress easements and easements from Santa Clara facilities crossing San Francisco Water property

AGREEMENT FOR PROFESSIONAL SERVICES
BY AND BETWEEN THE
CITY OF SANTA CLARA, CALIFORNIA
AND
HARRIS & ASSOCIATES, INC.

EXHIBIT B

FEE SCHEDULE

In no event shall the amount billed to City by Contractor for services under this Agreement exceed two million five hundred twenty six thousand four hundred eleven dollars ($2,526,411.00), subject to budget appropriations.

SVP fee proposal (May 8, 2014)

May 2014 to April 2015					
Position	Hourly Rate		Hours	Budget	
Project Director	$ 220		80	$	17,600
Program/Project Manager	$ 185		1200	$	222,000
Construction Manager	$ 185		2000	$	370,000
Project Engineer	$ 140		360	$	50,400
Project Engineer	$ 140		360	$	50,400
Project Engineer	$ 140		480	$	67,200
Project Support	$ 90		720	$	64,800
		Subtotal	5200	$	842,400
May 2015 to April 2016 (With 3% escalation)					
Project Director	$ 227		80	$	18,128
Program/Project Manager	$ 191		1080	$	205,794
Construction Manager	$ 191		1920	$	365,856
Project Engineer	$ 144		360	$	51,912
Project Engineer	$ 144		360	$	51,912
Project Engineer	$ 144		480	$	69,216
Project Support	$ 93		720	$	66,744
		Subtotal	5000	$	829,562
May 2016 to June 2017 (With 3% escalation)					
Project Director	$ 233		80	$	18,672
Program/Project Manager	$ 196		1080	$	211,968
Construction Manager	$ 196		1920	$	376,832
Project Engineer	$ 149		360	$	53,469
Project Engineer	$ 149		360	$	53,469
Project Engineer	$ 149		480	$	71,292
Project Support	$ 95		720	$	68,746
		Subtotal	5000	$	854,449
		Total	15200	$	2,526,411

Assumptions:
3% escalation in years 2 and 3.
Hours are a guide and maybe redistributed with SVP concurrance.
Hours and fee may be renegotiated.
Team members may be substituted depending on availability.

Harris & Associates

AGREEMENT FOR PROFESSIONAL SERVICES
BY AND BETWEEN THE
CITY OF SANTA CLARA, CALIFORNIA
AND
HARRIS & ASSOCIATES, INC.

EXHIBIT C

INSURANCE REQUIREMENTS

Without limiting the Contractor's indemnification of the City, and prior to commencing any of the Services required under this Agreement, the Contractor shall purchase and maintain in full force and effect, at its sole cost and expense, the following insurance policies with at least the indicated coverages, provisions and endorsements:

A. COMMERCIAL GENERAL LIABILITY INSURANCE

1. Commercial General Liability Insurance policy which provides coverage at least as broad as Insurance Services Office form CG 00 01. Policy limits are subject to review, but shall in no event be less than, the following:

   $1,000,000 Each Occurrence
   $2,000,000 General Aggregate
   $2,000,000 Products/Completed Operations Aggregate
   $1,000,000 Personal Injury

2. Exact structure and layering of the coverage shall be left to the discretion of Contractor; however, any excess or umbrella policies used to meet the required limits shall be at least as broad as the underlying coverage and shall otherwise follow form.

3. The following provisions shall apply to the Commercial Liability policy as well as any umbrella policy maintained by the Contractor to comply with the insurance requirements of this Agreement:

   a. Coverage shall be on a "pay on behalf" basis with defense costs payable in addition to policy limits;

   b. There shall be no cross liability exclusion which precludes coverage for claims or suits by one insured against another; and

   c. Coverage shall apply separately to each insured against whom a claim is made or a suit is brought, except with respect to the limits of liability.

B. BUSINESS AUTOMOBILE LIABILITY INSURANCE

Business automobile liability insurance policy which provides coverage at least as broad as ISO form CA 00 01 with policy limits a minimum limit of not less than one million dollars ($1,000,000) each accident using, or providing coverage at least as broad as, Insurance Services Office form CA 00 01. Liability coverage shall apply to all owned, non-owned and hired autos.

In the event that the Work being performed under this Agreement involves transporting of hazardous or regulated substances, hazardous or regulated wastes and/or hazardous or regulated materials, Contractor and/or its subcontractors involved in such activities shall provide coverage with a limit of two million dollars ($2,000,000) per accident covering transportation of such materials by the addition to the Business Auto Coverage Policy of Environmental Impairment Endorsement MCS90 or Insurance Services Office endorsement form CA 99 48, which amends the pollution exclusion in the standard Business Automobile Policy to cover pollutants that are in or upon, being transported or towed by, being loaded onto, or being unloaded from a covered auto.

C. WORKERS' COMPENSATION

1. Workers' Compensation Insurance Policy as required by statute and employer's liability with limits of at least one million dollars ($1,000,000) policy limit Bodily Injury by disease, one million dollars ($1,000,000) each accident/Bodily Injury and one million dollars ($1,000,000) each employee Bodily Injury by disease.

2. The indemnification and hold harmless obligations of Contractor included in this Agreement shall not be limited in any way by any limitation on the amount or type of damage, compensation or benefit payable by or for Contractor or any subcontractor under any Workers' Compensation Act(s), Disability Benefits Act(s) or other employee benefits act(s).

3. This policy must include a Waiver of Subrogation in favor of the City of Santa Clara, its City Council, commissions, officers, employees, volunteers and agents.

D. COMPLIANCE WITH REQUIREMENTS

All of the following clauses and/or endorsements, or similar provisions, must be part of each commercial general liability policy, and each umbrella or excess policy.

1. Additional Insureds. City of Santa Clara, its City Council, commissions, officers, employees, volunteers and agents are hereby added as additional insureds in respect to liability arising out of Contractor's work for City, using Insurance Services Office (ISO) Endorsement CG 20 10 11 85 or the combination of CG 20 10 03 97 and CG 20 37 10 01, or its equivalent.

2. Primary and non-contributing. Each insurance policy provided by Contractor shall contain language or be endorsed to contain wording making it primary insurance as respects to, and not requiring contribution from, any other insurance which the

Indemnities may possess, including any self-insurance or self-insured retention they may have. Any other insurance Indemnities may possess shall be considered excess insurance only and shall not be called upon to contribute with Contractor's insurance.

3. Cancellation.

   a. Each insurance policy shall contain language or be endorsed to reflect that no cancellation or modification of the coverage provided due to non-payment of premiums shall be effective until written notice has been given to City at least ten (10) days prior to the effective date of such modification or cancellation. In the event of non-renewal, written notice shall be given at least ten (10) days prior to the effective date of non-renewal.

   b. Each insurance policy shall contain language or be endorsed to reflect that no cancellation or modification of the coverage provided for any cause save and except non-payment of premiums shall be effective until written notice has been given to City at least thirty (30) days prior to the effective date of such modification or cancellation. In the event of non-renewal, written notice shall be given at least thirty (30) days prior to the effective date of non-renewal.

4. Other Endorsements. Other endorsements may be required for policies other than the commercial general liability policy if specified in the description of required insurance set forth in Sections A through D of this Exhibit C, above.

E. ADDITIONAL INSURANCE RELATED PROVISIONS

Contractor and City agree as follows:

1. Contractor agrees to ensure that subcontractors, and any other party involved with the Services who is brought onto or involved in the performance of the Services by Contractor, provide the same minimum insurance coverage required of Contractor, except as with respect to limits. Contractor agrees to monitor and review all such coverage and assumes all responsibility for ensuring that such coverage is provided in conformity with the requirements of this Agreement. Contractor agrees that upon request by City, all agreements with, and insurance compliance documents provided by, such subcontractors and others engaged in the project will be submitted to City for review.

2. Contractor agrees to be responsible for ensuring that no contract used by any party involved in any way with the project reserves the right to charge City or Contractor for the cost of additional insurance coverage required by this Agreement. Any such provisions are to be deleted with reference to City. It is not the intent of City to reimburse any third party for the cost of complying with these requirements. There shall be no recourse against City for payment of premiums or other amounts with respect thereto.

3. The City reserves the right to withhold payments from the Contractor in the event of material noncompliance with the insurance requirements set forth in this Agreement.

F. EVIDENCE OF COVERAGE

Prior to commencement of any Services under this Agreement, Contractor, and each and every subcontractor (of every tier) shall, at its sole cost and expense, purchase and maintain not less than the minimum insurance coverage with the endorsements and deductibles indicated in this Agreement. Such insurance coverage shall be maintained with insurers, and under forms of policies, satisfactory to City and as described in this Agreement. Contractor shall file with the City all certificates and endorsements for the required insurance policies for City's approval as to adequacy of the insurance protection.

G. EVIDENCE OF COMPLIANCE

Contractor or its insurance broker shall provide the required proof of insurance compliance, consisting of Insurance Services Office (ISO) endorsement forms or their equivalent and the ACORD form 25-S certificate of insurance (or its equivalent), evidencing all required coverage shall be delivered to City, or its representative as set forth below, at or prior to execution of this Agreement. Upon City's request, Contractor shall submit to City copies of the actual insurance policies or renewals or replacements. Unless otherwise required by the terms of this Agreement, all certificates, endorsements, coverage verifications and other items required to be delivered to City pursuant to this Agreement shall be mailed to:

EBIX Inc.
City of Santa Clara Electric Department
P.O. 12010-S2 or 151 North Lyon Avenue
Hemet, CA 92546-8010 Hemet, CA 92543

Telephone number: 951-766-2280
Fax number: 770-325-0409
Email address: ctsantaclara@ebix.com

H. QUALIFYING INSURERS

All of the insurance companies providing insurance for Contractor shall have, and provide written proof of, an A. M. Best rating of at least A minus 6 (A- VI) or shall be an insurance company of equal financial stability that is approved by the City or its insurance compliance representatives.

AGREEMENT FOR PROFESSIONAL SERVICES
BY AND BETWEEN THE
CITY OF SANTA CLARA, CALIFORNIA
AND
HARRIS & ASSOCIATES, INC.

EXHIBIT D

ETHICAL STANDARDS FOR CONTRACTORS SEEKING TO ENTER INTO AN AGREEMENT WITH THE CITY OF SANTA CLARA, CALIFORNIA

Termination of Agreement for Certain Acts.

A. The City may, at its sole discretion, terminate this Agreement in the event any one or more of the following occurs:

1. If a Contractor[1] does any of the following:

   a. Is convicted of operating a business in violation of any Federal, State or local law or regulation;

   b. Is convicted[2] of a crime punishable as a felony involving dishonesty[3];

   c. Is convicted of an offense involving dishonesty or is convicted of fraud or a criminal offense in connection with: (1) obtaining; (2) attempting to obtain; or, (3) performing a public contract or subcontract;

   d. Is convicted of any offense which indicates a lack of business integrity or business honesty which seriously and directly affects the present responsibility of a City contractor or subcontractor; and/or,

   e. Made (or makes) any false statement(s) or representation(s) with respect to this Agreement.

---

[1] For purposes of this Agreement, the word "Consultant" (whether a person or a legal entity) also refers to "Contractor" and means any of the following: an owner or co-owner of a sole proprietorship; a person who controls or who has the power to control a business entity; a general partner of a partnership; a principal in a joint venture; or a primary corporate stockholder [i.e., a person who owns more than ten percent (10%) of the outstanding stock of a corporation] and who is active in the day to day operations of that corporation.

[2] For purposes of this Agreement, the words "convicted" or "conviction" mean a judgment or conviction of a criminal offense by any court of competent jurisdiction, whether entered upon a verdict or a plea, and includes a conviction entered upon a plea of nolo contendere within the past five (5) years.

[3] As used herein, "dishonesty" includes, but is not limited to, embezzlement, theft, forgery, bribery, falsification or destruction of records, making false statements, failure to pay tax obligations, receiving stolen property, collusion or conspiracy.

2. If fraudulent, criminal or other seriously improper conduct of any officer, director, shareholder, partner, employee or other individual associated with the Contractor can be imputed to the Contractor when the conduct occurred in connection with the individual's performance of duties for or on behalf of the Contractor, with the Contractor's knowledge, approval or acquiescence, the Contractor's acceptance of the benefits derived from the conduct shall be evidence of such knowledge, approval or acquiescence.

B. The City may also terminate this Agreement in the event any one or more of the following occurs:

1. The City determines that Contractor no longer has the financial capability[4] or business experience[5] to perform the terms of, or operate under, this Agreement; or,

2. If City determines that the Contractor fails to submit information, or submits false information, which is required to perform or be awarded a contract with City, including, but not limited to, Contractor's failure to maintain a required State issued license, failure to obtain a City business license (if applicable) or failure to purchase and maintain bonds and/or insurance policies required under this Agreement.

C. In the event a prospective Contractor (or bidder) is ruled ineligible (debarred) to participate in a contract award process or a contract is terminated pursuant to these provisions, Contractor may appeal the City's action to the City Council by filing a written request with the City Clerk within ten (10) days of the notice given by City to have the matter heard. The matter will be heard within thirty (30) days of the filing of the appeal request with the City Clerk. The Contractor will have the burden of proof on the appeal. The Contractor shall have the opportunity to present evidence, both oral and documentary, and argument.

---

[4] Contractor becomes insolvent, transfers assets in fraud of creditors, makes an assignment for the benefit of creditors, files a petition under any section or chapter of the federal Bankruptcy Code (11 U.S.C.), as amended, or under any similar law or statute of the United States or any state thereof, is adjudged bankrupt or insolvent in proceedings under such laws, or a receiver or trustee is appointed for all or substantially all of the assets of Contractor.

[5] Loss of personnel deemed essential by the City for the successful performance of the obligations of the Contractor to the City.

AGREEMENT FOR PROFESSIONAL SERVICES
BY AND BETWEEN THE
CITY OF SANTA CLARA, CALIFORNIA
AND
HARRIS & ASSOCIATES, INC.

EXHIBIT E

AFFIDAVIT OF COMPLIANCE WITH ETHICAL STANDARDS

I hereby state that I have read and understand the language, entitled "Ethical Standards" set forth in Exhibit D. I have the authority to make these representations on my own behalf or on behalf of the legal entity identified herein. I have examined appropriate business records, and I have made appropriate inquiry of those individuals potentially included within the definition of "Contractor" contained in Ethical Standards at footnote 1.

Based on my review of the appropriate documents and my good-faith review of the necessary inquiry responses, I hereby state that neither the business entity nor any individual(s) belonging to said "Contractor" category [i.e., owner or co-owner of a sole proprietorship, general partner, person who controls or has power to control a business entity, etc.] has been convicted of any one or more of the crimes identified in the Ethical Standards within the past five (5) years.

The above assertions are true and correct and are made under penalty of perjury under the laws of the State of California.

HARRIS & ASSOCIATES, INC.
a California corporation

By: _____

Name: GARY S. WOHL

Title: CFO/COO

NOTARY'S ACKNOWLEDGMENT TO BE ATTACHED

Please execute the affidavit and attach a notary public's acknowledgment of execution of the affidavit by the signatory. If the affidavit is on behalf of a corporation, partnership, or other legal entity, the entity's complete legal name and the title of the person signing on behalf of the legal entity shall appear above. Written evidence of the authority of the person executing this affidavit on behalf of a corporation, partnership, joint venture, or any other legal entity, other than a sole proprietorship, shall be attached.

Please see attached
California All-Purpose Acknowledgment
6/12/14

CALIFORNIA ALL-PURPOSE ACKNOWLEDGMENT

CIVIL CODE § 1189

State of California

County of Contra Costa }

On 6/12/14 (Date) before me, Debra S. Grainger, Notary Public (Here Insert Name and Title of the Officer),

personally appeared Gary S. Wohl (Name(s) of Signer(s))

,

who proved to me on the basis of satisfactory evidence to be the person(s) whose name(s) is/are subscribed to the within instrument and acknowledged to me that he/she/they executed the same in his/her/their authorized capacity(ies), and that by his/her/their signature(s) on the instrument the person(s), or the entity upon behalf of which the person(s) acted, executed the instrument.

DEBRA S. GRAINGER
Commission # 2037606
Notary Public - California
Contra Costa County
My Comm. Expires Sep 6, 2017

I certify under PENALTY OF PERJURY under the laws of the State of California that the foregoing paragraph is true and correct.

WITNESS my hand and official seal.

Signature: _____ (Signature of Notary Public)

Place Notary Seal Above

OPTIONAL

Though the information below is not required by law, it may prove valuable to persons relying on the document and could prevent fraudulent removal and reattachment of this form to another document.

Description of Attached Document

Title or Type of Document: Agreement for Professional Svcs.; Santa Clara

Document Date: _____ Number of Pages: _____

Signer(s) Other Than Named Above: _____

Capacity(ies) Claimed by Signer(s)

Signer's Name: _____	Signer's Name: _____
☐ Corporate Officer — Title(s): _____	☐ Corporate Officer — Title(s): _____
☐ Individual	☐ Individual
☐ Partner — ☐ Limited ☐ General	☐ Partner — ☐ Limited ☐ General
☐ Attorney in Fact	☐ Attorney in Fact
☐ Trustee	☐ Trustee
☐ Guardian or Conservator	☐ Guardian or Conservator
☐ Other: _____	☐ Other: _____
Signer Is Representing: _____	Signer Is Representing: _____

© 2012 National Notary Association • NationalNotary.org • 1-800-US NOTARY (1-800-876-6827) Item #5907

AGREEMENT FOR PROFESSIONAL SERVICES
BY AND BETWEEN THE
CITY OF SANTA CLARA, CALIFORNIA
AND
HARRIS & ASSOCIATES, INC.

EXHIBIT F

MILESTONE SCHEDULE

(Not Applicable)

Meeting Date: 7/1/14

AGENDA REPORT

City of Santa Clara, California

Agenda Item # 6E-1

Date: June 20, 2014

To: City Manager for Council Action

From: Senior Staff Aide

Subject: Request for Championship Team Funding for Santa Clara Sparks/PAL to Compete in the Pacific Coast Division C Softball Regional Championships for 10U and 12U in San Diego, California, July 11-13, 2014

EXECUTIVE SUMMARY:

The City Manager's Office received a request from the Santa Clara Sparks/PAL Team to receive $4,200.00 funding through the City's Championship Team funding program.

The contribution agreement is available on the City's website or in the City Clerk's Office for review during normal business hours.

Council Approved Championship Team/Group Criteria

- *The funds requested for the event are in association with a specific state, national or international title or performance.*

  The Santa Clara Sparks/PAL Team has qualified to compete in the Pacific Coast Division C Softball Regional Championships for 10U and 12U in San Diego, California, and is seeking the City's financial assistance in sending 24 students and four coaches to represent Santa Clara by competing in this event.

- *Teams or groups should either be from Santa Clara schools or have at least 50% of the students who are residents of the City of Santa Clara.*

  The Santa Clara League/PAL is a non-profit group based in the City of Santa Clara and is affiliated with the Santa Clara Police Department and participants are Santa Clara residents.

- *City support is not to exceed 20% of allowable trip expenses and may not exceed $10,000 per year, per group, subject to availability of funds. Allowable trip expenses include the following: (a) Competition registration; (b) Competition hotel; (c) Transportation; and (d) food expenses only. Per Diem food expense is $11 per participant/per day or 20% of meal costs, whichever is lower. Allowable trip expenses are for the participating students and coaches/chaperones. The students-to-coach/chaperone ratio is six students to one coach/chaperone. No other miscellaneous expenses are reimbursable.*

  Funding assistance requested for the Softball team to compete at the Pacific Coast Division C Softball Regional Championships amounts to $4,200, which includes transportation, lodging, meals, and competition fees. The total cost submitted for the competition is $20,878.00. The team members are participating in several fundraising programs to raise the matching funds needed.

- *Payment will be made pursuant to an agreement with the City with income and expenses subject to audit.* Pending City Council approval of the request.

ADVANTAGES AND DISADVANTAGES OF ISSUE:
An advantage to approving this funding request is that the City will be promoted and recognized through the team's performance at the Pacific Coast Division C Softball Regional Championships in San Diego, California. A disadvantage is the staff time necessary to administer and audit the contribution agreement.

ECONOMIC/FISCAL IMPACT:
The request from the Santa Clara Sparks/PAL team is for $4,200.00. City Council has designated $36,000 in funds to support championship team events for fiscal year 2014-2015. The budgeted amount resides in General Government-Community Promotions (001-1042-87710-[I] 3232).

RECOMMENDATION:
That the City Council –

1. Approve Santa Clara Sparks/PAL request for $4,200.00 in matching funds from the Championship Team Trust Fund for travel to San Diego, California, to compete in the Pacific Coast Division C Softball Regional Championships for 10U and 12U, July 11-13, 2014;
2. Authorize the City Manager to execute the contribution agreement with the Santa Clara Sparks/PAL Team.

Certified as to Availability of Funds:
001-1042-87710-[I] 3232 $4,200.00

Jashma Kadam
Senior Staff Aide

Gary Ameling
Director of Finance

APPROVED:

Julio J. Fuentes
City Manager

MAJORITY VOTE OF COUNCIL

Documents Related to this Report:

1) *Contribution Agreement between the City of Santa Clara and Santa Clara Sparks/PAL Team*
2) *Application from Santa Clara Sparks/PAL Team requesting funding assistance through the City's Championship Team funding program dated June 19, 2014*

I:/citymanager/agenda reports/2014/SC Sparks Funding Request

Recd 6/20

City of Santa Clara
Guidelines for Funding Assistance Through
The Championship Team Fund

PURPOSE:

The purpose of this fund is to allow individuals/groups representing the City of Santa Clara in a specific state, national or international title or performance to submit a request for funding assistance from the City. The City of Santa Clara considers supporting youth in title competitions important to the overall enrichment of the community.

Guidelines:

1. *The funds requested for the event are in association with a specific state, national or international title or performance (event particulars and copies of supporting materials should be submitted along with the request for funding).*

2. *Teams or groups should either be from Santa Clara schools or have at least 50% of the students who are residents of the City of Santa Clara.*

3. *City support is not to exceed 20% of allowable trip expenses and may not exceed $10,000 per year, per group, subject to availability of funds. Allowable trip expenses include the following: (a) Competition/Performance registration; (b) Competition/Performance hotel; (c) Transportation; and (d) food expenses only. Allowable trip expenses are for the participating students and coaches/chaperones. The students-to-coach/chaperone ratio is six students to one coach/chaperone. No other miscellaneous expenses are reimbursable. Original receipts are required for all expenditures.*

   a. *Competition/Performance Registration – City support of 20% for team entry in the competition/performance event itself will be provided. Any ancillary trips, event, entertainment options, etc. included in event registration would not be reimbursable. A copy of the registration material for the competition/performance should be attached with the funding request. Original receipt required to be submitted.*
   b. *Competition/Performance Hotel – 20% of competition hotel room charges for participating youth and their coaches/chaperones are allowed. Reimbursement rate will be based on the least expensive competition/performance hotel. A copy of the registration material listing the cost of double (or more) occupant accommodations at the least expensive competition/performance hotel should be attached with the funding request along with the hotel bill. Note: Other hotel incidentals, such as room service, in-room mini bars, telephone calls, movies, parking, etc. added to the hotel bill are not reimbursable.*
   c. *Transportation – The most economical transportation should be used to and from the competition/performance event. In case of air transportation, reservations (and 20% reimbursement) are to be on the basis of advance-purchase economy class airfare. Original receipts required to be submitted.*
   d. *Per Diem Food Expense - The meal reimbursement rate of $11 per participant/per day or 20% of meal costs, whichever is lower, will be provided.*
   e. *Alcohol – Alcohol is not a reimbursable expense.*

4. *The City will make payment pursuant to an agreement between the City and the team/individual attending the competition/performance with income and allowable expenses subject to audit.*

Application Process:

1. *Submit applications to the City Manager's Office, 1500 Warburton Avenue, Santa Clara, CA 95050.*
2. *Applications must be filled out entirely and all supplemental information requested must be submitted with the application to be considered complete.*
3. *Staff of the City Manager's Office will review applications received and recommendations will be forwarded to the City Council for final approval generally within two weeks of receipt. Applicants will be notified of the status of their application and the date and time of the Council meeting.*
4. *Upon approval by Council, selected applicants will be invited to meet with staff to enter into a contract with the City. Funding would be treated as a contract for service.*

Audit Process

1. *Upon trip completion original receipts must be submitted within 30 days to substantiate City funds allocated for event.*
2. *If City funds cannot be fully justified based on the guidelines set forth, the group will be responsible for an appropriate reimbursement of City-provided funding.*

Request for funding of allowable expenses shall be submitted to the Senior Staff Aide, City Manager's Office. All allowed costs would be reimbursed or paid only upon the presentation of original receipts or suitable evidence of payment for the cost by the teams/individuals. Call City Manager's Office at 615-2210 for information.

City of Santa Clara
Application for Funding Assistance through the Championship Team Fund

1. ORGANIZATION INFORMATION

Name of Group or Organization Santa Clara PAL Sparks 10U

Address 1001 El Camino Real, Santa Clara, Ca 95050

Contact Person Marcos Ruiz Email Address: marcosr@playgroundsunlimited.net

Telephone (Day) (408) 639-2525 Evening

Describe Purpose of your organization The goal of PAL is to bring Police, neighborhood volunteers, and kids together in a positive setting. PAL is a nonprofit organization dedicated to teaching and guiding our youth.

How long has your organization been providing youth activities in Santa Clara? Over 40 years

2. ACTIVITY/PROGRAM INFORMATION

Name of State, National or International title/performance that you/your group will be competing for Pacific Coast Division C Regional Championship Games in San Diego, Ca.

Amount you are requesting $ 2100

Summary of proposed activity/project/program (include specifically where/how City funds would be used) funds will be used for team registration, to help subsidize transportation and lodging. Funds will also be used to subsidize food costs and other misc. travel expenses as well as other tournament costs.

Identify other organizations who have provided partial funding for this activity The team has held various "give back" nights at local restaurants.

Who is predominantly served by this program? 9-10 year old girls who are Santa Clara residents.

How will the funding assistance enhance your existing program? To give help to families that have been a part of PAL for numerous years and who have been so giving of their time & energy.

3. FUNDING INFORMATION

Total cost of participation in this event/contest/competition (including above amount requested) $10,439

How many students and coaches/chaperones will be participating?

Students 12 players Coach/Chaperones 3 Coaches

4. BUDGET SUMMARY OF TRAVEL EXPENSES

Travel Destination San Diego, Ca

Tournament/Competition Dates July 11-13, 2014

Transportation:

Airline	n/A	$
Car (rental and/or own)	rental & fuel	$ 1950.00
Bus		$
Train		$
Other (describe)		$

5. REGISTRATION/TOURNAMENT/ENTRY FEE

Cost for registration	425	$ 425.00
OTHER tournament expenses		1140.00

6. FOOD

Number of Days	4 kids need to arrive Thursday	$ 1200.00

7. LODGING

Hotel	Ramada in San Diego	$ 5724.00
Motel		$
Other (describe)		$

TOTAL TRAVEL EXPENSES: $ 10,439.00

The Applicant hereby proposes to provide the activity/program in accordance with the Youth Sports Assistance Fund Policy of the City of Santa Clara as stated in this application. If this application is approved for funding assistance, it is agreed that relevant Federal, State, and Local regulations, and other assurances as required by the City of Santa Clara will be adhered to. Furthermore, as duly authorized representative of the applicant organization, the applicant is fully capable of fulfilling its obligation under this proposal as stated herein.

This application and the information contained herein are true, correct and complete, to the best of my knowledge.

Date: June 19 2014

Santa Clara PAL Sparks

Agency Name

Representative Victoria Bontrager

Title Team mom (408) 209-8003

City of Santa Clara Contact:
Jashma Kadam, Sr. Staff Aide
408/615-2210

City of Santa Clara
Guidelines for Funding Assistance Through
The Championship Team Fund

PURPOSE:
The purpose of this fund is to allow individuals/groups representing the City of Santa Clara in a specific state, national or international title or performance to submit a request for funding assistance from the City. The City of Santa Clara considers supporting youth in title competitions important to the overall enrichment of the community.

Guidelines:

1. *The funds requested for the event are in association with a specific state, national or international title or performance (event particulars and copies of supporting materials should be submitted along with the request for funding).*

2. *Teams or groups should either be from Santa Clara schools or have at least 50% of the students who are residents of the City of Santa Clara.*

3. *City support is not to exceed 20% of allowable trip expenses and may not exceed $10,000 per year, per group, subject to availability of funds. Allowable trip expenses include the following: (a) Competition/Performance registration; (b) Competition/Performance hotel; (c) Transportation; and (d) food expenses only. Allowable trip expenses are for the participating students and coaches/chaperones. The students-to-coach/chaperone ratio is six students to one coach/chaperone. No other miscellaneous expenses are reimbursable. Original receipts are required for all expenditures.*

   a. *Competition/Performance Registration – City support of 20% for team entry in the competition/performance event itself will be provided. Any ancillary trips, event, entertainment options, etc. included in event registration would not be reimbursable. A copy of the registration material for the competition/performance should be attached with the funding request. Original receipt required to be submitted.*
   b. *Competition/Performance Hotel – 20% of competition hotel room charges for participating youth and their coaches/chaperones are allowed. Reimbursement rate will be based on the least expensive competition/performance hotel. A copy of the registration material listing the cost of double (or more) occupant accommodations at the least expensive competition/performance hotel should be attached with the funding request along with the hotel bill. Note: Other hotel incidentals, such as room service, in-room mini bars, telephone calls, movies, parking, etc. added to the hotel bill are not reimbursable.*
   c. *Transportation – The most economical transportation should be used to and from the competition/performance event. In case of air transportation, reservations (and 20% reimbursement) are to be on the basis of advance-purchase economy class airfare. Original receipts required to be submitted.*
   d. *Per Diem Food Expense - The meal reimbursement rate of $11 per participant/per day or 20% of meal costs, whichever is lower, will be provided.*
   e. *Alcohol – Alcohol is not a reimbursable expense.*

4. *The City will make payment pursuant to an agreement between the City and the team/individual attending the competition/performance with income and allowable expenses subject to audit.*

Application Process:

1. *Submit applications to the City Manager's Office, 1500 Warburton Avenue, Santa Clara, CA 95050.*
2. *Applications must be filled out entirely and all supplemental information requested must be submitted with the application to be considered complete.*
3. *Staff of the City Manager's Office will review applications received and recommendations will be forwarded to the City Council for final approval generally within two weeks of receipt. Applicants will be notified of the status of their application and the date and time of the Council meeting.*
4. *Upon approval by Council, selected applicants will be invited to meet with staff to enter into a contract with the City. Funding would be treated as a contract for service.*

Audit Process

1. *Upon trip completion original receipts must be submitted within 30 days to substantiate City funds allocated for event.*
2. *If City funds cannot be fully justified based on the guidelines set forth, the group will be responsible for an appropriate reimbursement of City-provided funding.*

Request for funding of allowable expenses shall be submitted to the Senior Staff Aide, City Manager's Office. All allowed costs would be reimbursed or paid only upon the presentation of original receipts or suitable evidence of payment for the cost by the teams/individuals. Call City Manager's Office at 615-2210 for information.

City of Santa Clara
Application for Funding Assistance through the Championship Team Fund

1. ORGANIZATION INFORMATION

Name of Group or Organization Santa Clara PAL Sparks 12u

Address 1001 El Camino Real, Santa Clara, Ca 95050

Contact Person Steven Robles Email Address: sjrobles80@yahoo.com

Telephone (Day) (408) 807-3834 Evening

Describe Purpose of your organization The goal of PAL is to bring Police, Neighborhood volunteers, and kids together in a positive setting. PAL is a nonprofit organization dedicated to teaching and guiding our youth.

How long has your organization been providing youth activities in Santa Clara? Over 40 years

2. ACTIVITY/PROGRAM INFORMATION

Name of State, National or International title/performance that you/your group will be competing for Pacific Coast Division C Regional Championship Games in San Diego, Ca.

Amount you are requesting $ 2100

Summary of proposed activity/project/program (include specifically where/how City funds would be used) funds will be used for team registration, to help subsidize transportation and lodging. Funds will also be used to subsidize food costs and other misc. travel expenses. as well as other tournament costs.

Identify other organizations who have provided partial funding for this activity The team has held various "give back" nights at local restaurants.

Who is predominantly served by this program? 11-12 year old girls who are Santa Clara residents.

How will the funding assistance enhance your existing program? To give help to families that have been a part of PAL for numerous years and who have been so giving of their time & energy.

3. FUNDING INFORMATION

Total cost of participation in this event/contest/competition (including above amount requested)
$10,439

How many students and coaches/chaperones will be participating?

Students 12 players Coach/Chaperones 3 Coaches

4. BUDGET SUMMARY OF TRAVEL EXPENSES

Travel Destination San Diego, Ca

Tournament/Competition Dates July 11-13, 2014

Transportation:

Airline	n/A	$
Car (rental and/or own)	rental & fuel	$ 1950.00
Bus		$
Train		$
Other (describe)		$

5. REGISTRATION/TOURNAMENT/ENTRY FEE

Cost for registration	425	$ 425.00
OTHER tournament expenses		1140.00

6. FOOD

Number of Days	4 kids need to arrive Thursday	$ 1200.00

7. LODGING

Hotel	Ramada in San Diego	$ 5724.00
Motel		$
Other (describe)		$

TOTAL TRAVEL EXPENSES: $ 10,439.00

The Applicant hereby proposes to provide the activity/program in accordance with the Youth Sports Assistance Fund Policy of the City of Santa Clara as stated in this application. If this application is approved for funding assistance, it is agreed that relevant Federal, State, and Local regulations, and other assurances as required by the City of Santa Clara will be adhered to. Furthermore, as duly authorized representative of the applicant organization, the applicant is fully capable of fulfilling its obligation under this proposal as stated herein.

This application and the information contained herein are true, correct and complete, to the best of my knowledge.

Date: June 19 2014

Santa Clara PAL Sparks

Agency Name

Representative Dawn Robles

Title Team Mom (408) 550-4807

City of Santa Clara Contact:
Jashma Kadam, Sr. Staff Aide
408/615-2210

CONTRIBUTION AGREEMENT BY AND BETWEEN THE CITY OF SANTA CLARA, CALIFORNIA AND SANTA CLARA SPARKS/PAL

This Agreement ("Agreement") is made and entered into on this ____ day of _____, 2014 ("Effective Date"), by and between the City of Santa Clara, California, a chartered California municipal corporation, with its principal place of business located at 1500 Warburton Avenue, Santa Clara, California 95050 ("City"), and Santa Clara Sparks/PAL a California nonprofit corporation, with its principal place of business located at 601 El Camino Real, Santa Clara, California 95050 ("Recipient"). City and Recipient may be referred to herein individually as a "Party" or collectively as the "Parties" or the "Parties to this Agreement."

RECITALS

Whereas:

1. As one of its functions as a chartered municipal corporation, City seeks to encourage, protect and enhance the health, safety, welfare and general good of the City and its citizens as well as improve the general quality of life for its citizens; and,

2. City desires to utilize the experience and ability of Recipient in helping to provide cultural, educational, recreational and entertainment opportunities for the general good of all.

In consideration for the above referenced recitals and the following mutual covenants, agreements and obligations of the Parties, the Recipient and City agree as follows:

AGREEMENT PROVISIONS

1. Incorporation of Preamble and Recitals

The Parties to this Agreement agree and attest to the truth and accuracy of the provisions contained in the Preamble and Recitals set forth above. The provisions of the Preamble and Recitals are hereby incorporated and made a part of this Agreement by this reference. The Parties agree that this Agreement has been entered into, at least in part, in consideration of the provisions contained in the Preamble and Recitals, as well as the provisions contained in the balance of this Agreement.

2. Nature of Agreement

City agrees to contribute an amount set forth in this Agreement ("Contribution") to Recipient, in consideration for Recipient's performance of the Activities described below and full compliance with all of the terms and conditions of this Agreement.

3. Duties of Recipient

In consideration for the receipt of funds to be paid to Recipient by City, Recipient shall perform all of the described work, services and activities required to present or to bring about the event(s) described in Exhibit A (collectively referred to herein as the "Services"), entitled, "Description of Recipient's Activities and Obligations," (the "Activities"), attached and incorporated by this reference.

4. Payment of Contribution

Recipient shall perform all of the Services under this Agreement as a condition precedent to the City's delivery of the fund ("Contribution") referenced in Exhibit B, entitled, "Amount of Contribution, Terms of Payment and Restrictions," attached and incorporated by this reference. Upon Recipient's compliance with the terms and conditions of this Agreement, City will contribute to Recipient the amount set forth in Exhibit B. The Contribution paid to Recipient shall not be used for any other purpose than to pay expenses, (or if said expenses have already been paid by Recipient, then for reimbursement of same to Recipient) related to the Activities. None of the City's Contribution will be used to pay for any expenses of Recipient incurred before the Effective Date.

5. Limitation of Financial Responsibility

In no event shall City's share of the Recipient's expenses related to the Services and Activities provided under this Agreement exceed the amount set forth in Exhibit B. In no event will Recipient have the right or power to pledge the credit of City or incur any obligation in the name of City.

6. Records and Documentation

Within thirty (30) days following the conclusion of Recipient's performance of the Activities required under this Agreement, Recipient shall deliver to the City a written detailed accounting statement showing all receipts and disbursements received or made in connection with the provision of the Activities for City review and/or audit. This accounting statement shall provide expense summary documentation to the satisfaction of the City Manager. If any of the funds listed in Exhibit B are not expended on the Activities pursuant to the terms of this Agreement, the unspent funds shall be returned to the City concurrently with submittal of said accounting statement.

7. Independent Contractor Status

It is agreed that during the performance of the Services and Activities required under the terms and conditions of this Agreement, Recipient, and any person(s) who is either employed by or contracted with Recipient to furnish labor and/or materials, either work as volunteer or as a paid employee, shall be deemed not to be an employee, contractor or agent of City. Recipient has full rights to manage its employees, volunteers and

contractors subject to the requirements of the law. The means by which the Services and Activities shall be accomplished is under the sole care, custody and control of Recipient.

8. Hold Harmless/Indemnification

Recipient agrees to protect, defend, hold harmless and indemnify City, its City Council, commissions, officers, agents and employees from and against any claim, injury, liability, loss, cost and/or expense or damage, however same may be caused, including all costs and reasonable attorney's fees in providing a defense to any claim arising therefrom for which City may become legally liable arising from Recipient's acts, errors or omissions, with respect to or in any way connected with the prosecution of the activities of Recipient pursuant to this Agreement.

9. Insurance Requirements

Prior to commencement of any of the activities described in this Agreement and during its entire term, Recipient shall purchase and/or maintain, in full force and effect, the following insurance policies:

A. commercial general liability policy (bodily injury and property damage);
B. worker's compensation employers' liability policy; and,
C. comprehensive automobile liability insurance policy (if applicable).

Said insurance policies shall be maintained, with respect to any employees of Recipient and any of its vehicles assigned to the performance of services under this Agreement with coverage amounts, (including the required endorsements, certificates of insurance and coverage verification), as defined in Exhibit C, attached hereto and incorporated herein by reference. No third party or parties shall have any claim or right of action under this Agreement for any cause whatsoever.

10. Nonassignment

Except as expressly agreed in writing by City, all Activities provided and Services required to be rendered under this Agreement shall be performed by Recipient. Recipient shall not otherwise subcontract or delegate to others the Activities to be performed under this Agreement.

11. Confirmation of Non Profit Status

As a prerequisite for City approval of this Agreement and for the payment of funds by the City, Recipient shall provide City with current written proof that Recipient has qualified for, and has complied with, all conditions required to attain the status of a non profit organization, as that status is defined under both Federal Internal Revenue Code, Section 501(c)(3), and State of California Franchise Tax Board under California Revenue and Taxation Code Section 23701. Recipient shall provide such proof of non profit status to the Office of the City Clerk at the City.

12. Time of Performance/Termination

All Services under this Agreement are to commence upon the Effective Date, and shall continue through July 14, 2014, unless sooner terminated in accordance with the terms of this Agreement. The time allotted for the completion of the Services and Activities required under this Agreement may be extended by mutual agreement of the Parties for such additional period of time as the City may determine to be in the public interest. This Agreement may be terminated by either Party upon ten (10) calendar days written notice to the other, without cause. In the event of any termination, City shall reimburse Recipient for all services actually performed and/or all expenses actually incurred under this Agreement, to date of termination, and such payment shall constitute full payment and there shall be no other charge. Upon request of City, Recipient shall provide City with copies of all documents prepared by Recipient as well as all receipts and proof of expenditures being requested for reimbursement.

13. Notices

All notices to the Parties shall, unless otherwise requested in writing, be sent to City addressed as follows:

City of Santa Clara
Office of the City Manager
1500 Warburton Avenue
Santa Clara, CA 95050

Or by facsimile at (408) 241-6771

And to Recipient addressed as follows:

Recipient's notice address:
Name: Santa Clara Sparks/PAL
Address: 601 El Camino Real
Santa Clara, CA 95050

Or by facsimile at (408) 984-1407

14. Captions

The captions of the various sections, paragraphs and subparagraphs are for convenience only and shall not be considered or referred to in resolving questions of interpretation.

15. Statutes and Law Governing Contract

This Agreement shall be governed and construed in accordance with the statutes and laws of the State of California.

16. Other Agreements

This Agreement shall not prevent either Party from entering into similar agreements with others.

The Parties acknowledge and accept the terms and conditions of this Agreement as evidenced by the following signatures of their duly authorized representatives. It is the intent of the Parties that this Agreement shall become operative on the Effective Date.

CITY OF SANTA CLARA, CALIFORNIA,
a chartered California municipal corporation

APPROVED AS TO FORM:

RICHARD E. NOSKY, JR.
City Attorney

ATTEST:

ROD DIRIDON, JR.
City Clerk

JULIO J. FUENTES
City Manager
1500 Warburton Avenue
Santa Clara, CA 95050
Telephone: (408) 615-2210
Fax: (408) 241-6771

"CITY"

A CALIFORNIA NONPROFIT CORPORATION

By: R. Martinez

Name: Rob Martinez

Title: Executive Director

Local Address: 601 El Camino Real
Santa Clara, CA 95050

Email Address: rmartinez@santaclaraca.gov

Telephone: (408) 615-4880

Fax: (408) 984-1407

"RECIPIENT"

S:\Attorney\AGREEMENTS\Contribution\Contribution Agreement (Under $5,000).doc

CONTRIBUTION AGREEMENT
BY AND BETWEEN THE
CITY OF SANTA CLARA, CALIFORNIA
AND
SANTA CLARA SPARKS/PAL

EXHIBIT A
DESCRIPTION OF RECIPIENT'S ACTIVITIES AND OBLIGATIONS

Recipient shall carry out the following promotional activities on behalf of City. Recipient shall carry out the following promotional activities on behalf of the City:

1. Compete in the Pacific Coast Division C Softball Regional Championships for 10U and 12U in San Diego, California, July 11-13, 2014.

Recipient shall also comply with the following requirements:

1. Adhere to Council policy guidelines for eligibility for matching City contributions.

2. By August 13, 2014, provide a detailed accounting statement to the City showing all receipts and disbursements received or made in connection with the Recipient's competition at the Pacifica Coast Division C Softball Regional Championships for 10U and 12U in San Diego, California, July 11-13, 2014.

CONTRIBUTION AGREEMENT
BY AND BETWEEN THE
CITY OF SANTA CLARA, CALIFORNIA
AND
SANTA CLARA SPARKS/PAL

EXHIBIT B
AMOUNT OF CONTRIBUTION, TERMS OF PAYMENT AND RESTRICTIONS

Amount of Contribution.

Pursuant to the terms of this Agreement upon presentation of bills therefore, City will contribute to Recipient toward the payment of the expenses of Recipient's competition at the Pacific Coast Division C Softball Regional Championships for 10U and 12U in San Diego, California, July 11-13, 2014, in an amount not to exceed four thousand two hundred ($4,200.00). In no event will the total amount of the contribution exceed four thousand two hundred dollars ($4,200.00).

Terms of Payment.

The City shall pay Recipient four thousand two hundred dollars ($4,200.00), provided the Recipient has raised matching funds.

1. The income and expenses related to the attendance at the Pacific Coast Division C Softball Regional Championships for 10U and 12U are subject to audit.

Restrictions.

1. Monies disbursed by the City to recipient under the terms of this contribution agreement shall be used exclusively for the Recipient's competition at the Pacific Coast Division C Softball Regional Championships for 10U and 12U in San Diego, California, July 11-13, 2014.

2. City funds are to be used exclusively for travel- and competition-related expenses incurred by those participating in the Pacific Coast Division C Softball Regional Championships for 10U and 12U in San Diego, California, July 11-13, 2014.

CONTRIBUTION AGREEMENT
BY AND BETWEEN THE
CITY OF SANTA CLARA, CALIFORNIA
AND
SANTA CLARA SPARKS/PAL

EXHIBIT C
INSURANCE REQUIREMENTS

During the term of this Agreement, Contractor shall purchase and maintain the following insurance policies with the indicated policy limits and endorsements:

A. Commercial General Liability (CGL), with policy limits not less than $1,000,000 for each occurrence covering bodily injury and property damage;

1. CGL Primary Insurance Endorsement; and

2. This CGL policy shall include an endorsement which adds the City of Santa Clara, its Council, employees, and officers as additional insureds.

B. Business Automotive Liability (BAL), with policy limits not less than $1,000,000; and

C. Workers' Compensation and Employers' Liability with policy limits of California statutory limits.

All insurance certificates, endorsements, coverage verifications and other items required pursuant to this Agreement shall be mailed directly to the City's insurance compliance representative as follows:

EBIX Inc.
City of Santa Clara [City Manager's Office]
P.O. 12010-S2 or 151 North Lyon Avenue
Hemet, CA 92546-8010 Hemet, CA 92543

Telephone number: 951-766-2280
Fax number: 770-325-0409
Email address: ctsantaclara@ebix.com

S:\Attorney\INSURANCE\CITY\EXHIBIT C-11 Contract less than $5,000.doc

CONTRIBUTION AGREEMENT BY AND BETWEEN THE CITY OF SANTA CLARA, CALIFORNIA AND SANTA CLARA SPARKS/PAL

This Agreement ("Agreement") is made and entered into on this ____ day of _____, 2014 ("Effective Date"), by and between the City of Santa Clara, California, a chartered California municipal corporation, with its principal place of business located at 1500 Warburton Avenue, Santa Clara, California 95050 ("City"), and Santa Clara Sparks/PAL a California nonprofit corporation, with its principal place of business located at 601 El Camino Real, Santa Clara, California 95050 ("Recipient"). City and Recipient may be referred to herein individually as a "Party" or collectively as the "Parties" or the "Parties to this Agreement."

RECITALS

Whereas:

1. As one of its functions as a chartered municipal corporation, City seeks to encourage, protect and enhance the health, safety, welfare and general good of the City and its citizens as well as improve the general quality of life for its citizens; and,

2. City desires to utilize the experience and ability of Recipient in helping to provide cultural, educational, recreational and entertainment opportunities for the general good of all.

In consideration for the above referenced recitals and the following mutual covenants, agreements and obligations of the Parties, the Recipient and City agree as follows:

AGREEMENT PROVISIONS

1. Incorporation of Preamble and Recitals

The Parties to this Agreement agree and attest to the truth and accuracy of the provisions contained in the Preamble and Recitals set forth above. The provisions of the Preamble and Recitals are hereby incorporated and made a part of this Agreement by this reference. The Parties agree that this Agreement has been entered into, at least in part, in consideration of the provisions contained in the Preamble and Recitals, as well as the provisions contained in the balance of this Agreement.

2. Nature of Agreement

City agrees to contribute an amount set forth in this Agreement ("Contribution") to Recipient, in consideration for Recipient's performance of the Activities described below and full compliance with all of the terms and conditions of this Agreement.

3. Duties of Recipient

In consideration for the receipt of funds to be paid to Recipient by City, Recipient shall perform all of the described work, services and activities required to present or to bring about the event(s) described in Exhibit A (collectively referred to herein as the "Services"), entitled, "Description of Recipient's Activities and Obligations," (the "Activities"), attached and incorporated by this reference.

4. Payment of Contribution

Recipient shall perform all of the Services under this Agreement as a condition precedent to the City's delivery of the fund ("Contribution") referenced in Exhibit B, entitled, "Amount of Contribution, Terms of Payment and Restrictions," attached and incorporated by this reference. Upon Recipient's compliance with the terms and conditions of this Agreement, City will contribute to Recipient the amount set forth in Exhibit B. The Contribution paid to Recipient shall not be used for any other purpose than to pay expenses, (or if said expenses have already been paid by Recipient, then for reimbursement of same to Recipient) related to the Activities. None of the City's Contribution will be used to pay for any expenses of Recipient incurred before the Effective Date.

5. Limitation of Financial Responsibility

In no event shall City's share of the Recipient's expenses related to the Services and Activities provided under this Agreement exceed the amount set forth in Exhibit B. In no event will Recipient have the right or power to pledge the credit of City or incur any obligation in the name of City.

6. Records and Documentation

Within thirty (30) days following the conclusion of Recipient's performance of the Activities required under this Agreement, Recipient shall deliver to the City a written detailed accounting statement showing all receipts and disbursements received or made in connection with the provision of the Activities for City review and/or audit. This accounting statement shall provide expense summary documentation to the satisfaction of the City Manager. If any of the funds listed in Exhibit B are not expended on the Activities pursuant to the terms of this Agreement, the unspent funds shall be returned to the City concurrently with submittal of said accounting statement.

7. Independent Contractor Status

It is agreed that during the performance of the Services and Activities required under the terms and conditions of this Agreement, Recipient, and any person(s) who is either employed by or contracted with Recipient to furnish labor and/or materials, either work as volunteer or as a paid employee, shall be deemed not to be an employee, contractor or agent of City. Recipient has full rights to manage its employees, volunteers and

contractors subject to the requirements of the law. The means by which the Services and Activities shall be accomplished is under the sole care, custody and control of Recipient.

8. Hold Harmless/Indemnification

Recipient agrees to protect, defend, hold harmless and indemnify City, its City Council, commissions, officers, agents and employees from and against any claim, injury, liability, loss, cost and/or expense or damage, however same may be caused, including all costs and reasonable attorney's fees in providing a defense to any claim arising therefrom for which City may become legally liable arising from Recipient's acts, errors or omissions, with respect to or in any way connected with the prosecution of the activities of Recipient pursuant to this Agreement.

9. Insurance Requirements

Prior to commencement of any of the activities described in this Agreement and during its entire term, Recipient shall purchase and/or maintain, in full force and effect, the following insurance policies:

A. commercial general liability policy (bodily injury and property damage);
B. worker's compensation employers' liability policy; and,
C. comprehensive automobile liability insurance policy (if applicable).

Said insurance policies shall be maintained, with respect to any employees of Recipient and any of its vehicles assigned to the performance of services under this Agreement with coverage amounts, (including the required endorsements, certificates of insurance and coverage verification), as defined in Exhibit C, attached hereto and incorporated herein by reference. No third party or parties shall have any claim or right of action under this Agreement for any cause whatsoever.

10. Nonassignment

Except as expressly agreed in writing by City, all Activities provided and Services required to be rendered under this Agreement shall be performed by Recipient. Recipient shall not otherwise subcontract or delegate to others the Activities to be performed under this Agreement.

11. Confirmation of Non Profit Status

As a prerequisite for City approval of this Agreement and for the payment of funds by the City, Recipient shall provide City with current written proof that Recipient has qualified for, and has complied with, all conditions required to attain the status of a non profit organization, as that status is defined under both Federal Internal Revenue Code, Section 501(c)(3), and State of California Franchise Tax Board under California Revenue and Taxation Code Section 23701. Recipient shall provide such proof of non profit status to the Office of the City Clerk at the City.

12. Time of Performance/Termination

All Services under this Agreement are to commence upon the Effective Date, and shall continue through July 14, 2014, unless sooner terminated in accordance with the terms of this Agreement. The time allotted for the completion of the Services and Activities required under this Agreement may be extended by mutual agreement of the Parties for such additional period of time as the City may determine to be in the public interest. This Agreement may be terminated by either Party upon ten (10) calendar days written notice to the other, without cause. In the event of any termination, City shall reimburse Recipient for all services actually performed and/or all expenses actually incurred under this Agreement, to date of termination, and such payment shall constitute full payment and there shall be no other charge. Upon request of City, Recipient shall provide City with copies of all documents prepared by Recipient as well as all receipts and proof of expenditures being requested for reimbursement.

13. Notices

All notices to the Parties shall, unless otherwise requested in writing, be sent to City addressed as follows:

City of Santa Clara
Office of the City Manager
1500 Warburton Avenue
Santa Clara, CA 95050

Or by facsimile at (408) 241-6771

And to Recipient addressed as follows:

Recipient's notice address:
Name: Santa Clara Sparks/PAL
Address: 601 El Camino Real
Santa Clara, CA 95050

Or by facsimile at (408) 984-1407

14. Captions

The captions of the various sections, paragraphs and subparagraphs are for convenience only and shall not be considered or referred to in resolving questions of interpretation.

15. Statutes and Law Governing Contract

This Agreement shall be governed and construed in accordance with the statutes and laws of the State of California.

16. Other Agreements

This Agreement shall not prevent either Party from entering into similar agreements with others.

The Parties acknowledge and accept the terms and conditions of this Agreement as evidenced by the following signatures of their duly authorized representatives. It is the intent of the Parties that this Agreement shall become operative on the Effective Date.

CITY OF SANTA CLARA, CALIFORNIA,
a chartered California municipal corporation

APPROVED AS TO FORM:

RICHARD E. NOSKY, JR.
City Attorney

ATTEST:

ROD DIRIDON, JR.
City Clerk

JULIO J. FUENTES
City Manager
1500 Warburton Avenue
Santa Clara, CA 95050
Telephone: (408) 615-2210
Fax: (408) 241-6771

"CITY"

A CALIFORNIA NONPROFIT CORPORATION

By: R. Martinez

Name: Rob Martinez

Title: Executive Director

Local Address: 601 El Camino Real
Santa Clara, CA 95050

Email Address: rmartinez@santaclaraca.gov

Telephone: (408) 615-4880

Fax: (408) 984-1407

"RECIPIENT"

S:\Attorney\AGREEMENTS\Contribution\Contribution Agreement (Under $5,000).doc

CONTRIBUTION AGREEMENT
BY AND BETWEEN THE
CITY OF SANTA CLARA, CALIFORNIA
AND
SANTA CLARA SPARKS/PAL

EXHIBIT A
DESCRIPTION OF RECIPIENT'S ACTIVITIES AND OBLIGATIONS

Recipient shall carry out the following promotional activities on behalf of City. Recipient shall carry out the following promotional activities on behalf of the City:

1. Compete in the Pacific Coast Division C Softball Regional Championships for 10U and 12U in San Diego, California, July 11-13, 2014.

Recipient shall also comply with the following requirements:

1. Adhere to Council policy guidelines for eligibility for matching City contributions.

2. By August 13, 2014, provide a detailed accounting statement to the City showing all receipts and disbursements received or made in connection with the Recipient's competition at the Pacifica Coast Division C Softball Regional Championships for 10U and 12U in San Diego, California, July 11-13, 2014.

CONTRIBUTION AGREEMENT
BY AND BETWEEN THE
CITY OF SANTA CLARA, CALIFORNIA
AND
SANTA CLARA SPARKS/PAL

EXHIBIT B
AMOUNT OF CONTRIBUTION, TERMS OF PAYMENT AND RESTRICTIONS

Amount of Contribution.

Pursuant to the terms of this Agreement upon presentation of bills therefore, City will contribute to Recipient toward the payment of the expenses of Recipient's competition at the Pacific Coast Division C Softball Regional Championships for 10U and 12U in San Diego, California, July 11-13, 2014, in an amount not to exceed four thousand two hundred ($4,200.00). In no event will the total amount of the contribution exceed four thousand two hundred dollars ($4,200.00).

Terms of Payment.

The City shall pay Recipient four thousand two hundred dollars ($4,200.00), provided the Recipient has raised matching funds.

1. The income and expenses related to the attendance at the Pacific Coast Division C Softball Regional Championships for 10U and 12U are subject to audit.

Restrictions.

1. Monies disbursed by the City to recipient under the terms of this contribution agreement shall be used exclusively for the Recipient's competition at the Pacific Coast Division C Softball Regional Championships for 10U and 12U in San Diego, California, July 11-13, 2014.

2. City funds are to be used exclusively for travel- and competition-related expenses incurred by those participating in the Pacific Coast Division C Softball Regional Championships for 10U and 12U in San Diego, California, July 11-13, 2014.

CONTRIBUTION AGREEMENT
BY AND BETWEEN THE
CITY OF SANTA CLARA, CALIFORNIA
AND
SANTA CLARA SPARKS/PAL

EXHIBIT C
INSURANCE REQUIREMENTS

During the term of this Agreement, Contractor shall purchase and maintain the following insurance policies with the indicated policy limits and endorsements:

A. Commercial General Liability (CGL), with policy limits not less than $1,000,000 for each occurrence covering bodily injury and property damage;

1. CGL Primary Insurance Endorsement; and

2. This CGL policy shall include an endorsement which adds the City of Santa Clara, its Council, employees, and officers as additional insureds.

B. Business Automotive Liability (BAL), with policy limits not less than $1,000,000; and

C. Workers' Compensation and Employers' Liability with policy limits of California statutory limits.

All insurance certificates, endorsements, coverage verifications and other items required pursuant to this Agreement shall be mailed directly to the City's insurance compliance representative as follows:

EBIX Inc.
City of Santa Clara [City Manager's Office]
P.O. 12010-S2 or 151 North Lyon Avenue
Hemet, CA 92546-8010 Hemet, CA 92543

Telephone number: 951-766-2280
Fax number: 770-325-0409
Email address: ctsantaclara@ebix.com

S:\Attorney\INSURANCE\CITY\EXHIBIT C-11 Contract less than $5,000.doc

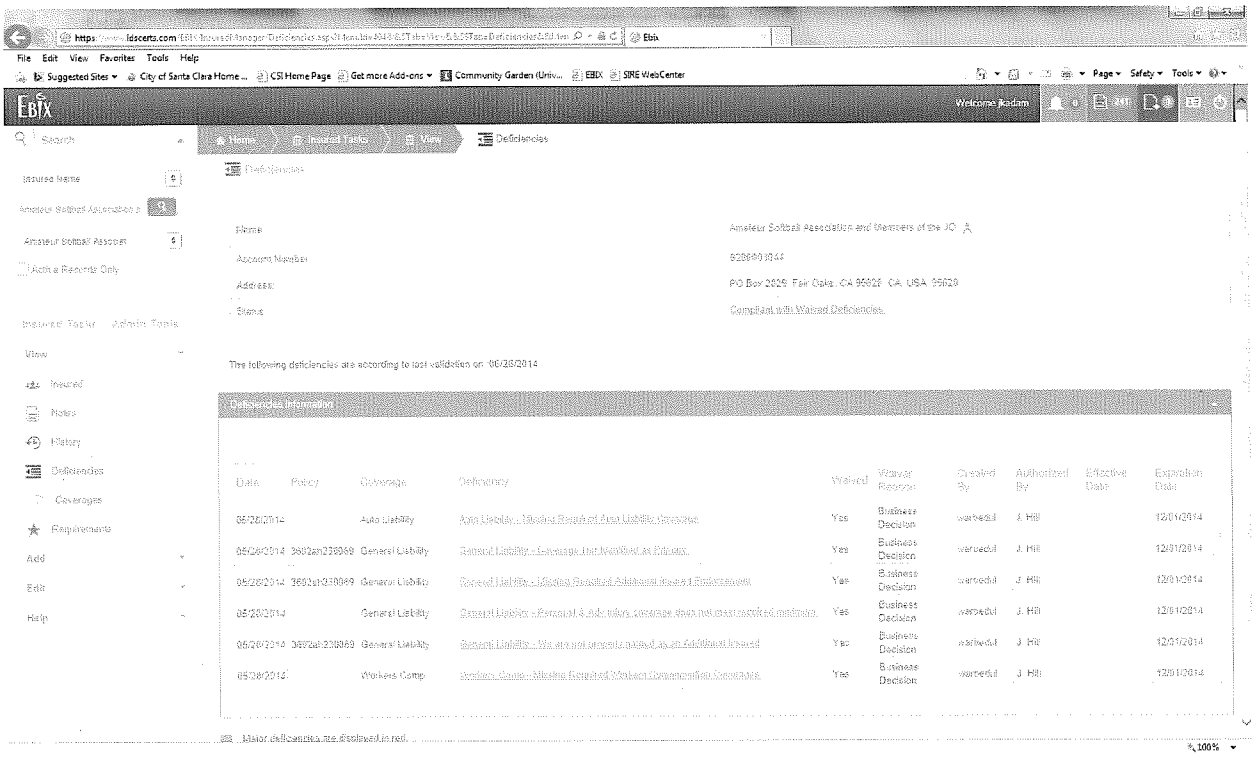

File Edit View Favorites Tools Help
Suggested Sites
City of Santa Clara Home ...
CSI Home Page
Get more Add-ons
Community Garden (Univ...
EBIX
SIRE WebCenter
Page Safety Tools
EBIX
Welcome Radam
Search
Home
Insured Tasks
View
Deficiencies
Insured Name
Amateur Softball Association
Amateur Softball Associat
Active Records Only
Insured Tasks
Admin Tools
View
Insured
Notes
History
Deficiencies
Coverages
Requirements
Add
Edit
Help
Deficiencies
Name
Amateur Softball Association and Members of the JO
Account Number
Address
PO Box 2829 Fair Oaks, CA 95628 CA USA 95628
Status
Compliant with Waived Deficiencies
The following deficiencies are according to last validation on: 06/26/2014
Deficiencies Information
Date
Policy
Coverage
Deficiency
Waived
Waiver Reason
Created By
Authorized By
Effective Date
Expiration Date
06/26/2014
Auto Liability
Yes
Business Decision
warbedul
J. Hill
12/01/2014
06/26/2014
3602ah230069
General Liability
Yes
Business Decision
warbedul
J. Hill
12/01/2014
06/26/2014
3602ah230069
General Liability
Yes
Business Decision
warbedul
J. Hill
12/01/2014
06/26/2014
General Liability
Yes
Business Decision
warbedul
J. Hill
12/01/2014
06/26/2014
3602ah230069
General Liability
Yes
Business Decision
warbedul
J. Hill
12/01/2014
06/26/2014
Workers Comp
Yes
Business Decision
warbedul
J. Hill
12/01/2014
Major deficiencies are displayed in red.
100%

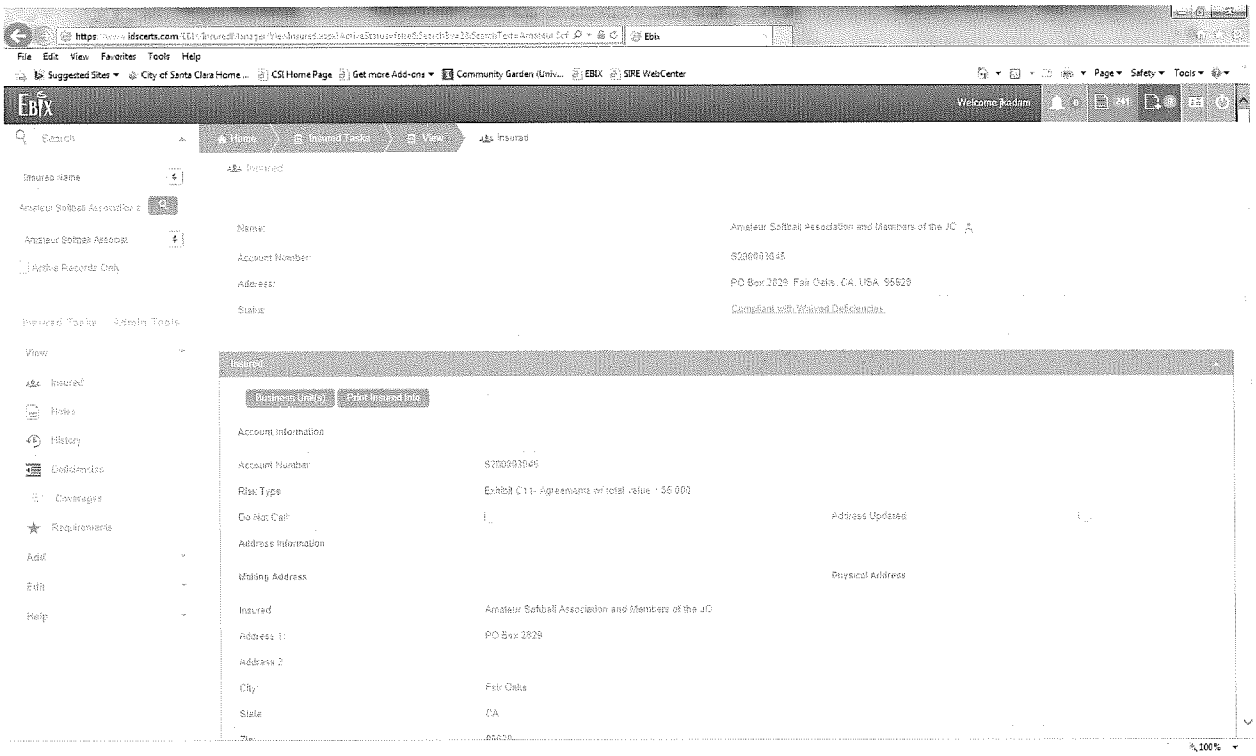
File Edit View Favorites Tools Help
Suggested Sites
City of Santa Clara Home ...
CSI Home Page
Get more Add-ons
Community Garden (Univ...
EBIX
SIRE WebCenter
Page
Safety
Tools
EBIX
Welcome Jkadam
Search
Home
Insured Tasks
View
Insured
Insured Name
Amateur Softball Association a
Amateur Softball Associat
Active Records Only
Insured Tasks
Admin Tools
View
Insured
Notes
History
Deficiencies
Coverages
Requirements
Add
Edit
Help
Name:
Amateur Softball Association and Members of the JC
Account Number:
S200003045
Address:
PO Box 2829, Fair Oaks, CA, USA, 95629
Status:
Compliant with Waived Deficiencies
Insured
Business Unit(s)
Print Insured Info
Account Information
Account Number
S200003045
Risk Type
Exhibit C11- Agreements w/ total value > 56,000
Do Not Call
Address Updated
Address Information
Mailing Address
Physical Address
Insured
Amateur Softball Association and Members of the JC
Address 1:
PO Box 2829
Address 2:
City:
Fair Oaks
State
CA
100%

Meeting Date: 7/1/14

AGENDA REPORT

City of Santa Clara, California

Agenda Item # 10 A

Date: June 17, 2914

To: City Manager for Council Action

From: Director of Parks and Recreation

Subject: Request to Accept Donation from The Bessie Vizzusi-Gruhlke Fund at Community Foundation of Santa Cruz County

EXECUTIVE SUMMARY:

Community Foundation of Santa Cruz County has offered to donate $1,500 to help support the Woodshop Center at the Santa Clara Senior Center on behalf of the Bessie Vizzusi-Gruhlke Fund.

ADVANTAGES AND DISADVANTAGES OF ISSUE:

Approval of this donation will provide $1,500 to help fund the Woodshop program at the Senior Center.

ECONOMIC/FISCAL IMPACT:

Approval of this donation will provide $1,500 to help fund the Woodshop program at the Senior Center (084-1114-59650-(A)20913).

RECOMMENDATION:

That the Council accept the donation from Community Foundation of Santa Cruz County on behalf of the Bessie Vizzusi-Gruhlke Fund in the amount of $1,500 to help support the Woodshop program at the Senior Center and authorize the transmittal of a letter of appreciation signed by the Mayor and City Manager.

That the Council:

1. Approve and accept a donation of $1,500 from Community Foundation of Santa Cruz County on behalf of the Bessie Vizzusi-Gruhlke Fund for the Senior Center Woodshop program at the Santa Clara Senior Center (084-1114-59650-(A)20913); and,
2. Approve appropriation of $1,500 for the Senior Center Woodshop program at the Santa Clara Senior Center (084-1114-87500-(A)20913); and,
3. Authorize the transmittal of a letter of appreciation signed by the Mayor and City Manager.

James Teixeira

James F. Teixeira
Director of Parks & Recreation

Certified as to Budget Form OK. JCH.

for Gary Ameling
Director of Finance/
Assistant City Manager

APPROVED:

Julio J. Fuentes
City Manager

FIVE COUNCIL VOTES

Documents Related to this Report: None.

I:\Parks\Agendas\Donation\2014\Community Foundation Santa Cruz County Woodshop 14.doc

Meeting Date: 7/1/14

AGENDA REPORT

City of Santa Clara, California

Agenda Item # 10B

Date: June 17, 2014

To: City Manager for Council Action

From: Director of Parks and Recreation

Subject: Request to Accept Donation from the Santa Clara Homestead Little League

EXECUTIVE SUMMARY:

The infield at Homestead Little League field located at Earl Carmichael Park was renovated in March of 2014. Santa Clara Homestead Little League has offered to donate $2,083.37 to cover the cost of 'Sports Turf' sod which was used to renovate the infield.

ADVANTAGES AND DISADVANTAGES OF ISSUE:

Approval of this donation will provide $2,083.37 to cover the cost of purchasing 'Sports Turf' sod, which was installed at Homestead Little League Field.

ECONOMIC/FISCAL IMPACT:

Approval of this donation will provide $2,083.37 to purchase 'Sports Turf' sod that was installed at Earl Carmichael Park donation account number 532-1132-59650-3001.

RECOMMENDATION:

That Council accept the donation from Santa Clara Homestead Little League in the amount of $2,083.37 for the purchase of 'Sports Turf' sod installed at Homestead Little League Field located at Earl Carmichael Park and authorize the transmittal of a letter of appreciation signed by the Mayor and City Manager.

James Teixeira

James F. Teixeira
Director of Parks and Recreation

Certified as to Budget Form OK JFH

Angela Kraetsch for

Gary Ameling
Director of Finance/
Assistant City Manager

APPROVED:

Julio J. Fuentes
City Manager

FIVE COUNCIL VOTES

Documents Related to this Report:

1) None

I:\Parks\Agendas\Donation\2014\Santa Clara Homestead Little League - Sod at Earl Carmichael Park.doc

Meeting Date: 7/1/14

AGENDA REPORT

City of Santa Clara, California

Agenda Item # 10C

Date: June 19, 2014

To: City Manager for Council Action

From: Director of Planning & Inspection

Subject: Minor Amendment to the City's Fiscal Year 13-14 Annual Plan for use of CDBG and HOME Entitlement Funds - Approval of a One-Time Increase to the Home Investment Partnerships (HOME) Program Administrative Budget in the Amount of $110,000

EXECUTIVE SUMMARY:

The City has budgeted $30,970 or 10% of its fiscal year 2013/14 Federal Home Investment Partnerships (HOME) Program to program administration. The City has the authority to spend the additional HOME funds on Administration because of changes in the HOME rules 20 years ago. In the first two years of the HOME program, no funds could be used to defray local administrative costs. In 1993, Congress changed the rules, allowing 10% of each grant to be used for Administration and made the decision retroactive to the City's 1991 and 1992 grants.

As demonstrated in the attached report, the City has the authority to spend up to an additional $110,281.46 in available HOME funds for administrative costs. The authority for additional funds for HOME administration funds is due to the large amount of un-anticipated program income received by the Neighborhood Conservation and Improvement Program (NCIP). The available HOME funds would come from 2013-14 HOME Program Income received by the City's NCIP. By approving the additional appropriation, Council will also approve a minor amendment to the City's FY 13-14 Annual Plan for use of CDBG and HOME Entitlement funds.

ADVANTAGES AND DISADVANTAGES OF ISSUE:

The additional HOME administrative budget increase will reduce the impact of Housing administrative costs on the City's General fund in the amount of $110,000. The NCIP program has received approximately $370,000 in HOME program income in FY 13/14 and the estimated amount in the FY 13/14 Annual Plan was $50,000. HOME program income has substantially exceeded $50,000 in recent years, and there will be no impact on current or future funding for NCIP. The City has to meet two deadlines for the HOME program, a commitment deadline on July 31, 2014 and an expenditure deadline on September 30, 2014. The increase in the administrative budget will help to meet the two deadlines. The increase to the administrative budget is a one-time increase and will not be available on a regular on-going basis.

ECONOMIC/FISCAL IMPACT:

The proposed addition of HOME administrative funds would increase the budgeted HOME funds for administration to $140,970 for FY 2013-14. The use of the $110,000 in HOME funds for administration would reduce currently budgeted non-federal administration revenue sources (General Fund) by $110,000.

RECOMMENDATION:

That the Council:

1. Approve a minor amendment to the City's 2013-14 Annual Plan for use of Community Development Block Grant and Home Investment Partnerships Act Entitlement Funds, in the amount of $110,000 to increase HOME Program Administration on a one-time basis; and

2. Approve and authorize the transfer and appropriation of funds in the amount of $110,000 of HOME program income from the Neighborhood Conservation & Improvement Program [562-5543-80300-5552-(G)HOME] to the HOME administration services account [562-5544-87010-5910-(G)HOME] to provide additional funding for HOME administration.

Kevin L. Riley
Director of Planning & Inspection

Certified as to Availability of Funds:
562-5543-80300-5552-(G)HOME
$110,000

Gary Ameling
Director of Finance/
Assistant City Manager

APPROVED:

Julio J. Fuentes
City Manager

FIVE COUNCIL VOTES

Documents Related to this Report:

1) U.S. Department of Housing and Urban Development, Office of Community Planning and Development, Integrated Disbursement and Information System, Status of HOME Grants Santa Clara Administrative Funds (IDIS PR-27)

F:\Drawdowns, 2010-2015\FY 2013-14\Home Admin Increase Request\Agenda Report 7-1-14.doc

IDIS - PR27

Administrative Funds (AD)

Fiscal Year	Authorized Amount	Amount Authorized from PI	Amount Reserved	% Auth Rsvd	Balance to Reserve	Total Disbursed	% Rsvd Disb	Available to Disburse
1992	$75,000.00	$0.00	$75,000.00	100.0%	$0.00	$75,000.00	100.0%	$0.00
1993	$36,000.00	$0.00	$36,000.00	100.0%	$0.00	$36,000.00	100.0%	$0.00
1994	$37,400.00	$0.00	$37,400.00	100.0%	$0.00	$37,400.00	100.0%	$0.00
1995	$39,200.00	$0.00	$39,200.00	100.0%	$0.00	$39,200.00	100.0%	$0.00
1996	$42,200.00	$0.00	$42,200.00	100.0%	$0.00	$42,200.00	100.0%	$0.00
1997	$41,600.00	$3,476.17	$35,216.09	78.1%	$0.00	$35,216.09	100.0%	$0.00
1998	$44,600.00	$7,945.60	$44,600.00	84.8%	$0.00	$44,600.00	100.0%	$0.00
1999	$48,000.00	$2,411.00	$48,000.00	95.2%	$0.00	$48,000.00	100.0%	$0.00
2000	$48,100.00	$326.35	$48,100.00	99.3%	$0.00	$48,100.00	100.0%	$0.00
2001	$53,200.00	$9,245.02	$53,200.00	85.1%	$0.00	$53,200.00	100.0%	$0.00
2002	$53,100.00	$9,901.91	$53,100.00	84.2%	$0.00	$53,100.00	100.0%	$0.00
2003	$68,726.60	$21,863.52	$68,726.60	75.8%	$0.00	$68,726.60	100.0%	$0.00
2004	$68,590.30	$3,581.50	$68,590.30	95.0%	$0.00	$68,590.30	100.0%	$0.00
2005	$65,774.00	$8,347.45	$65,774.00	88.7%	$0.00	$65,774.00	100.0%	$0.00
2006	$61,859.10	$9,900.07	$71,759.17	100.0%	$0.00	$71,759.17	100.0%	$0.00
2007	$61,380.70	$21,570.94	$82,951.64	100.0%	$0.00	$82,951.64	100.0%	$0.00
2008	$59,563.40	$3,201.04	$62,764.45	100.0%	$0.00	$62,764.45	100.0%	$0.00
2009	$66,177.20	$8,835.72	$75,012.92	100.0%	$0.00	$75,012.92	100.0%	$0.00
2010	$65,810.10	$17,403.38	$83,213.48	100.0%	$0.00	$83,213.48	100.0%	$0.00
2011	$58,111.50	$19,448.13	$77,559.63	100.0%	$0.00	$32,165.27	41.4%	$45,394.36
2012	$33,917.50	$24,507.05	$33,917.50	58.0%	$24,507.05	$0.00	0.0%	$33,917.50
2013	$30,969.60	$31,059.29	$30,969.60	49.9%	$31,059.29	$0.00	0.0%	$30,969.60
Total	**$1,159,280.00**	**$203,024.14**	**$1,233,255.38**	**90.5%**	**$55,566.34**	**$1,122,973.92**	**91.0%**	**$110,281.46**

7/1/14

14B

CLOSED SESSION REQUEST

City of Santa Clara, California

It is requested the **CITY COUNCIL OF THE CITY OF SANTA CLARA** meet in closed session on **Tuesday, July 15, 2014,** at **6:00 p.m.**, or as soon thereafter as the matter can be discussed, in the Council Conference Room located in the East Wing of City Hall at 1500 Warburton Avenue, Santa Clara, California, to consider the following matter(s) and to potentially take action with respect to it/them:

☒ **CONFERENCE WITH LEGAL COUNSEL-EXISTING LITIGATION**
Pursuant to Gov. Code § 54956.9(a)
Vinod K. Sharma, et al. v. Successor Agency to the Redevelopment Agency of the City of Santa Clara, et al., Sacramento County Superior Court Case No. 34-2013-80001396

Date: June 27, 2014

RICHARD E. NOSKY, JR.
City Attorney

I:\COUNCIL\CLOSED SESSION AND SPECIAL MEETINGS\2014\07-15-14 Request City Exist Lit.doc