**DOCUMENT 00001**

**TITLE PAGE**

# PROJECT MANUAL

For the
LUMP SUM BIDDING & CONSTRUCTION
of the

# PALM SUBSTATION 60kV EXTENSION PROJECT

Public Works

# CONTRACT 2375B

Located in the City of
SANTA CLARA, CALIFORNIA

For the
City of Santa Clara Electric Department

Doing business as

# SILICON VALLEY POWER

1500 Warburton Avenue
Santa Clara, California 95050
Prepared by

AND

Harris & Associates.

Silicon Valley Power
CITY OF SANTA CLARA

THE CITY OF SANTA CLARA CALIFORNIA 1852

DOCUMENT 00007

# SEALS PAGE

## ELECTRICAL ENGINEERING

Company Name (Type or Print)

Engineer's Name (Type or Print)

Registration No. Expires

Seal & Signature

## CIVIL ENGINEERING

Company Name (Type or Print)

Engineer's Name (Type or Print)

Registration No. Expires

Seal & Signature

## STRUCTURAL ENGINEERING

Company Name (Type or Print)

Engineer's Name (Type or Print)

Registration No. Expires

Seal & Signature

END OF DOCUMENT

THIS PAGE

INTENTIONALLY

LEFT BLANK

# DOCUMENT 00010
# TABLE OF CONTENTS

## INTRODUCTORY INFORMATION


| Document | Title |
|---|---|
| 00001 | Title Page |
| 00002 | Plans Title Page |
| 00007 | Seals Page |
| 00010 | Table of Contents |
| 00015 | List of Maps, Drawings and Sketches |


## BIDDING REQUIREMENTS


| Document | Title |
|---|---|
| 00100 | Advertisement for Bids |
| 00200 | Instructions to Bidders |
| 00210 | Indemnity and Release Agreement |
| 00250 | Bid Contents, Evaluation, Selection and Award |
| 00320 | Geotechnical Data and Existing Conditions |
| 00400 | Bid Form |
| 00411 | Bond Accompanying Bid |
| 00420 | Bidder Registration Form |
| 00421 | Declaration of Contractor's License Status |
| 00430 | Subcontractors List |
| 00440 | Affidavit of Compliance with Ethical Standards |
| 00441 | Ethical Standards for Contractors |
| 00450 | Statement of Qualifications for Construction Work |
| 00460 | Schedule of Major Equipment and Material Suppliers |
| 00481 | Non-Collusion Affidavit |


## CONTRACTING REQUIREMENTS


| Document | Title |
|---|---|
| 00510 | Notice of Award |
| 00520 | Agreement |
| 00550 | Notice to Proceed |
| 00610 | Construction Performance Bond |
| 00620 | Construction Labor and Material Payment Bond |
| 00630 | Guaranty |
| 00650 | Agreement and Release of Any and All Claims |
| 00654 | Workers' Compensation Insurance Statement |
| 00660 | Substitution Request Form |

| Document | Title |
|---|---|
| 00670 | Escrow Bid Documents |
| 00680 | Escrow Agreement for Security Deposits in Lieu of Retention |

**CONDITIONS OF THE CONTRACT**

| Document | Title |
|---|---|
| 00700 | General Conditions |
| 00800 | Supplementary Conditions |
| 00805 | Supplementary Conditions – Hazardous Materials |
| 00821 | Insurance |
| 00822 | Apprenticeship Program |
| 00900 | Addenda |

**SPECIFICATIONS**

**Division 1 - General Requirements**

| Section | Title |
|---|---|
| 01100 | Summary of Work |
| 01200 | Measurement and Payment |
| 01250 | Modification Procedures |
| 01315 | Project Meetings |
| 01320 | Progress Schedules and Reports |
| 01330 | Submittal Procedures |
| 01350 | Special Procedures |
| 01410 | Regulatory Requirements |
| 01411 | Regulatory Requirements – Hazardous Materials |
| 01420 | References and Definitions |
| 01450 | Testing and Inspection |
| 01500 | Temporary Facilities and Controls |
| 01540 | Site Security and Safety |
| 01590 | Mitigation Measures |
| 01600 | Product Requirements |
| 01620 | Product Options |
| 01715 | Existing Underground Facilities |
| 01731 | Cutting and Patching |
| 01740 | Cleaning |
| 01770 | Contract Closeout |
| 01780 | Project Record Documents |

**Division 2 – Site Construction**

| Section | Title |
|---|---|
| 02000 | Supplemental General Requirements for Civil Improvements |
| 02300 | Earthwork |
| 02310 | Utility Trenching and Backfill |
| 02320 | Pavement Base Courses |
| 02510 | Water System |
| 02513 | Asphalt Concrete Paving |
| 02620 | Subdrainage |
| 02630 | Storm Drainage System |
| 02785 | Signs, Object Markers, Traffic Stripe and Pavement Markings and Markers |
| 02821 | Chain Link Fences and Gates |

**Division 3 – Concrete**

| Section | Title |
|---|---|
| | |
| | |
| | |
| | |

**Division 4 – Masonry**

| Section | Title |
|---|---|
| | |

**Division 5 – Metals**

| Section | Title |
|---|---|
| | |
| | |
| | |

**Division 7 – Thermal and Moisture Protection**

| Section | Title |
|---|---|
| | |

**Division 15 – Mechanical**

| Section | Title |
|---|---|
| | |

**Division 16 – Electrical**

| Section | Title |
|---|---|
| | |

| | |
|---|---|
| | |
| | |
| | |
| | |
| | |
| | |
| | |
| | |
| | |

**Appendix**

| Section | Title |
|---|---|
| A | All plans and drawings listed on Document 00015 – (List of Maps, Drawings, and Sketches |

**END OF DOCUMENT**

DOCUMENT 00015

# LIST OF MAPS, DRAWINGS AND SKETCHES

## NORTHEASTERN LOOP PLAN & PROFILE DRAWINGS

| Drawing | Rev | Title | Sheets |
|---|---|---|---|
| 16093 - 0 | 0 | Palm Substation 60kV Line Extension Cover Sheet | 1 |
| 16093 - A | 0 | Kifer Receiving Station to Norman Avenue Junction | 1 - 2 |
| 16093 - B | 0 | Norman Avenue Junction to Palm Substation | 1 - 2 |
| 16093 - C | 0 | Palm Substation to Norman Avenue Junction | 1 - 2 |

## KIFER RECEIVING STATION DRAWINGS

| Drawing | Rev | Title | Sheets |
|---|---|---|---|
| KR-E-O-X-03 | 5 | Kifer Receiving Station 60kV Bus Work Details Sheet 1 | 1 |
| KR-E-O-X-05 | 5 | Kifer Receiving Station 60kV Bus Work Details Sheet 3 | 1 |
| KR-E-O-X-09 | 9 | Kifer Receiving Station Single Line Diagram | 1 |
| KR-S-O-X-03 | 2 | Kifer Receiving Station 60kV Structures & Details Sheet 2 | 1 |
| KR-S-O-X-04 | 3 | Kifer Receiving Station 60kV Structures & Details Sheet 1 | 1 |

## NORMAN AVENUE JUNCTION DRAWINGS

| Drawing | Rev | Title | Sheets |
|---|---|---|---|
| N-A-O-C-01 | 5 | Norman Avenue Junction Plot Plan | 1 |
| N-E-O-C-02 | 2 | Norman Avenue Junction General Arrangement - Equipment | 1 |

## PALM SUBSTATION DRAWINGS

| Drawing | Rev | Title | Sheets |
|---|---|---|---|
| P-E-O-X-03 | 0 | Palm Substation Single Line Diagram | 1 |
| P-E-O-X-53 | 1 | Palm Substation General Arrangement Plan | 1 |
| P-E-O-X-54 | 1 | Palm Substation Elevations and Sections | 1 |
| P-E-O-X-55 | 1 | Palm Substation Dead End Structure Elevation | 1 |
| P-S-O-X-05 | 0 | Palm Substation Dead End Structures Sections & Details | 1 |

END OF DOCUMENT

THIS PAGE

INTENTIONALLY

LEFT BLANK

# DOCUMENT 00100

# ADVERTISEMENT FOR BIDS

1. **NOTICE.** THE CITY OF SANTA CLARA, CALIFORNIA, a chartered California municipal corporation ("City") hereby gives notice that it will accept Bids for construction of the following public work:

**CITY CONTRACT NUMBER 2375B**

**PALM SUBSTATION 60kV EXTENSION PROJECT**

2. **BID SUBMISSION.** City will receive sealed Bids no later than 3:00 p.m. as determined by the atomic clock on the wall of the office of the City Clerk on Monday, September 22, 2008. City's representative will call out the designated time in the Office of the City Clerk, 1500 Warburton Avenue, Santa Clara, California, stating that the period for accepting Bids is closed. The Bid opening will be in accordance with procedures set forth in Document 00200 (Instructions to Bidders).

3. **CONTACT INFORMATION.**

| | |
|---|---|
| Project Manager: | Rocco Colicchia |
| Phone: | (925) 827-4900 ext.246 |
| Fax: | (925) 827-2956 |
| e-Mail: | rcolicchia@harris-assoc.com |
| Mailing address: | City of Santa Clara<br>1500 Warburton Avenue<br>Santa Clara, CA 95050 |

4. **STATEMENTS OF QUALIFICATIONS.** Each Bidder shall be required to submit, in accordance with Document 00200 (Instructions to Bidders) and Document 00450 (Statement of Qualifications for Construction Work), a Statement of Qualifications.

5. **DESCRIPTION OF THE WORK.** The PALM SUBSTATION 60Kv EXTENSION PROJECT consists of the construction of a new 60kV overhead extension to serve the new Palm Substation.

6. **CONTRACT TIME.** Work shall be Substantially Complete by December 20th, 2008 and Final Completion shall be by January 31st, 2009.

7. **REQUIRED CONTRACTOR'S LICENSE(S).** A valid California contractor's license, appropriate to the Work, is required to Bid this Contract. Contractor must also possess a valid "A" and "C-10" license. Joint ventures must secure a joint venture license prior to award of this Contract. Removal, handling, and/or disposal of hazardous materials may, by law, require hazardous substance removal certification by the Contractor's State License Board.

8. **PREVAILING WAGE LAWS.** The successful Bidder must comply with all prevailing wage laws applicable to the Project, and related requirements contained in the Contract Documents.

9. **INSTRUCTIONS.** Bidders shall refer to Document 00200 (Instructions to Bidders) for required documents and items to be submitted in sealed envelopes for deposit into the Bid box, located at the City's office, and applicable times for submission.

10. **SUBSTITUTION OF SECURITIES.** City will permit successful Bidder to substitute securities for retention monies withheld to ensure performance of Contract, as set forth in Document 00680 (Escrow Agreement for Security Deposits in Lieu of Retention), in accordance with California Public Contract Code, Section 22300. By this reference, Document 00680 (Escrow Agreement for Security Deposits in Lieu of Retention) is incorporated in full in this Document 00100.

11. **MANDATORY PRE-BID MEETING**. The City will conduct a mandatory pre-bid meeting at the following time and place:

| | |
|---|---|
| Time: | 9:30 A.M. |
| Date: | August 28, 2008 |
| Place: | City of Santa Clara, Council Chambers<br>1500 Warburton Ave.<br>Santa Clara, CA 95050 |

Bidders must attend the pre-bid conference and sign an attendance roster as a condition to bidding. The pre-bid Conference will last approximately 2 hours.

A reference drawing CD will be issued at the mandatory pre-bid meeting.

Any Bidder wishing to investigate subsurface conditions at the Site must schedule such a visit with the City in accordance with Document 00200 (Instructions to Bidders).

12. **PROCUREMENT OF BIDDING DOCUMENTS.** Potential Bidders may examine Bidding Documents at the City's offices. In order to submit a bid, a Potential Bidder must become a plan holder of record by purchasing at least one copy of the Bidding Documents and making a non-refundable payment of $75.00 for each set of bidding documents purchased. Only plan holders of record will receive addenda and notices during bidding. City will accept cash or checks payable to the "City of Santa Clara." Bidding Documents need not be returned to City.

13. **BID PREPARATION COST.** Bidders are solely responsible for the cost of preparing their Bids.

14. **RESERVATION OF RIGHTS.** City specifically reserves the right, in its sole discretion, to reject any or all Bids, or re-bid, or to waive inconsequential deviations from Bid requirements not involving time, price, or quality of the Work.

By order of the City Council of the City of Santa Clara.

END OF DOCUMENT

# DOCUMENT 00200

# INSTRUCTIONS TO BIDDERS

Bids are requested for a general construction contract, or work described in general, as follows:

**CITY CONTRACT NUMBER 2375B**

**PALM SUBSTATION 60kV EXTENSION PROJECT**

1. **RECEIPT OF BIDS.** Sealed Bids will be received by the City at the City Clerk's office (see paragraph 2 below) on September 22, 2008. City will receive Bids in two separate opaque sealed 10" x 13" envelopes, labeled Envelope "A" and Envelope "B," each containing the respective items described in paragraphs 4 and 5 below, respectively. All Bid envelopes will be time-stamped to reflect their submittal time. Both Envelope "A" and Envelope "B" shall be due by 3:00 p.m. as determined by the atomic clock on the wall of the office of the City Clerk. City will reject all Bids received after the specified time and will return such Bids to Bidders unopened. Bidders must submit Bids in accordance with this Document 00200.

2. **CONTACT INFORMATION.**

Project Manager: Rocco Colicchia
Phone: 925-827-4900 ext. 246
Fax: 925-827-2956
e-Mail: rcolicchia@harris-assoc.com

Mailing address: City of Santa Clara
Attn: City Clerk
1500 Warburton Avenue
Santa Clara, CA 95050

3. **BID SUBMISSION.** Each Bidder shall submit its Bid in two separate opaque sealed 10" x 13" envelopes containing forms listed in Document 00250 Bid Contents, Evaluation, Selection and Award and in the manner described in Document 00250. Each Bidder should mark its Bid envelopes as:

**BIDDER'S COMPANY NAME**
**BID FOR CONTRACT 2375B**
**PALM SUBSTATION PROJECT**
**ENVELOPE "A" (or "B" as appropriate)**

Bids shall be deemed to include the written responses of the Bidder to any questions or requests for information of City made as part of Bid evaluation process after submission of Bid. **Bidder's failure to submit all required documents strictly as required entitles City to reject the Bid as non-responsive.**

4. **CONTENTS OF ENVELOPE "A" - BID PRICE.** Envelope "A" shall include:

   a. Document 00400 (Bid Form) completed in accordance with paragraph 6 of this Document 00200.

b. Bid security supplied and completed in accordance with paragraph 7 of this Document 00200.

c. Document 00420 (Bidder's Registration Form)

d. Document 00421 (Declaration of Contractor's License Status)

e. Document 00430 (Subcontractors List Form) in accordance with paragraph 8 of this Document 00200.

5. **CONTENTS OF ENVELOPE "B" - BIDDER QUALIFICATIONS.** Envelope "B" shall include:

f. Document 00450 (Statement of Qualifications for Construction Work). Statement of Qualifications submitted in accordance with paragraph 9 of this Document 00200.

g. Document 00654 (Workers Compensation Insurance Statement).

h. Document 00430 (Subcontractors List Form) in accordance with paragraph 8 of this Document 00200.

i. Document 00440 (Affidavit of Compliance with Ethical Standards)

j. Document 00481 (Non-Collusion Affidavit).

6. **REQUIRED BID FORMS.** All Bidders must submit Bids using, where applicable, documents supplied in this Project Manual, including without limitation, Document 00400 (Bid Form), Document 00420 (Bidder Registration Form), Document 00421 (Declaration of Contractor's License Status), Document 00430 (Subcontractors List), Document 00440 (Affidavit of Compliance with Ethical Standards for Contractors), Document 00450 (Statement of Qualifications for Construction Work), and Document 00481 (Non-Collusion Affidavit), Document 00654 (Worker's Compensation Insurance Certificate), and any other item identified in Document 00250 Bid Contents, Evaluation, Selection and Award.

City may reject as non-responsive any Bid not submitted on the required forms. Bids must be full and complete. Bidders must complete all Bid items and supply all information required by Bidding Documents. City reserves the right in its sole discretion to reject any Bid as non-responsive as a result of any error or omission in the Bid. Bidders may not modify the Bid Form or qualify their Bids. Bidders must submit clearly and distinctly written Bids. Bidders must clearly make any changes in their Bids by crossing out original entries, entering new entries, and initialing new entries. City reserves the right to reject any Bid not clearly written.

7. **REQUIRED BID SECURITY.** Bidders must submit with their Bids either cash, a cashier's check, or certified check from a responsible bank in the United States, or corporate surety bond furnished by a surety authorized to do business in the State of California, of not less than ten percent of amount of Bid, payable to City. All Bidders choosing to submit a surety bond must submit it on the required form, Document 00411 (Bond Accompanying Bid). City will reject as non-responsive any Bid submitted without the necessary Bid security.

City may retain Bid securities and Bid bonds of other than the Apparent Low Bidder for a period of 90 Days after award or full execution of the Contract, whichever first occurs.

Upon full execution of the Contract, and upon request by Bidder, City will return to the respective unsuccessful Bidders their Bid securities and Bid bonds.

8. **REQUIRED SUBCONTRACTORS LIST.** All Bidders must submit with their Bids the required information on all Subcontractors in Document 00430 (Subcontractors List) for those Subcontractors who will perform any portion of Work, including labor, rendering of service, or specially fabricating and installing a portion of the Work or improvement according to detailed drawings contained in the plans and specifications, in excess of one half of one percent of total Bid. Violation of this requirement may result in Bid being deemed non-responsive and not being considered.

9. **REQUIRED STATEMENT OF QUALIFICATIONS.** In order for a Bidder to be eligible to Bid on this Contract, it must submit a Statement of Qualifications responsive to the requirements identified in Document 00450 (Statement of Qualification for Construction Work) ("SOQ"), including without limitation qualification information for Subcontractors and schedulers, if any.

   Each Bidder shall submit its SOQ as part of Envelope B as provided in Paragraph 1 above, paragraph 5 of Document 00250 Bid Contents, Evaluation, Selection and Award and Document 00450 Statement of Qualifications for Construction Work, containing all information required by Document 00450 Statement of Qualifications for Construction Work, including without limitation qualification information for subcontractors and schedulers.

   Except as otherwise provided in paragraphs 20 and 21 of this Document 00200, Document 00250 (Bid Contents, Evaluation, Selection and Award), or in Document 00450 (Statement of Qualification for Construction Work), City will make final determinations regarding Bidder responsibility based solely upon the SOQ submitted as part of Envelope "B" on Bid day. Information in the SOQ shall be current.

10. **MANDATORY PRE-BID MEETING**. The City will conduct a mandatory pre-bid meeting at the following time and place:

| | |
|---|---|
| Time: | 9:30a.m. |
| Date: | August 28, 2008 |
| Place: | City of Santa Clara, Council Chambers<br>1500 Warburton Ave.<br>Santa Clara, CA 95050 |

   Following the mandatory Pre-Bid Meeting will be a mandatory site visit. City reserves the right to schedule and organize the Site Visit to minimize disruption to existing facilities and congestion.

   Bidders must attend this pre-Bid meeting and sign an attendance roster as a condition to bidding. The mandatory pre-Bid meeting will last approximately 2 hours.

   Any Bidder wishing to investigate subsurface conditions or otherwise conduct invasive investigations, explorations, tests, or studies at this Site, shall schedule such examinations with the City by giving the City at least seven (7) days written notice. Any additional site visit is not a substitute for the mandatory pre-bid meeting and mandatory site visit.

Additionally, any such Bidder must deliver an executed Document 00210 (Indemnity and Release Agreement) and provide an insurance certificate as described therein by noon of the Day prior to its examination. Bidders who intend only to observe Site conditions and not conduct such examinations are not required to provide an executed Document 00210 (Indemnity and Release Agreement) or an insurance certificate.

Bidders shall submit written questions in connection with the Site Visit. City will transmit to all parties recorded as having received Bidding Documents such Addenda as City in its discretion considers necessary in response to written questions. Bidders shall not rely on oral statements. Oral statements will not be binding or legally effective. Other Pre-Bid Site Visits may be scheduled at City's sole discretion, depending on staff availability.

11. **OTHER REQUIREMENTS PRIOR TO BIDDING.** Submission of Bid signifies Bidder's careful examination of Bidding Documents and complete understanding of the nature, extent, and location of Work to be performed. As a condition to Bidding, Bidder must complete tasks listed in Document 00520 (Agreement), Article 5. Submission of Bid shall constitute Bidder's express representation to the City that Bidder has fully completed these tasks.

12. **EXISTING DRAWINGS AND GEOTECHNICAL DATA.** Bidders may examine any available existing conditions information (e.g., record documents, specifications, studies, drawings of previous work) by giving City reasonable advance notice, as well as applicable environmental assessment information (if any) regarding the Project. Document 00320 (Geotechnical Data and Existing Conditions) applies to all supplied existing conditions information and geotechnical reports and all other information supplied regarding existing conditions either above ground or below ground. City will make copies available for a fee. A Bidder must give two (2) days advance notice if copies are desired.

13. **ADDENDA.** Bidders must direct all questions about the meaning or intent of Bidding Documents to City (Attention: Project Engineer) in writing. Interpretations or clarifications considered necessary by City in response to such questions will be issued by Addenda mailed, faxed, e-mailed, or delivered to all parties recorded by City as having received Bidding Documents. Addenda will be written and will be issued to each Bidder to the address or fax number supplied City by Bidder. City may not answer questions received less than ten (10) days prior to the date for opening Bids. Only questions answered by formal written Addenda will be binding. Oral and other interpretations or clarifications will be without legal effect.

    a. Addenda may also be issued to modify the Bidding Documents as deemed advisable by City.

    b. Addenda shall be acknowledged by number with signature in Document 00400 (Bid Form) and shall be part of the Contract Documents. A complete listing of Addenda may be secured from City.

14. **SUBSTITUTIONS.** Bidders must base their Bids on products and systems specified in Contract Documents or listed by name in Addenda.

a. Except as provided in paragraph 14.c below, City will consider substitution requests only for "or equal items." Bidders wanting to use "or equal" item(s) may submit Document 00660 (Substitution Request Form) no later than 35 Days after the due date for City receiving Bids. After that date, the City will not accept "or equal" substitution requests. To assess "or equal" acceptability of product or system, submittals of substitutions shall contain the information required in Document 00660 (Substitution Request Form) and set forth in Section 01600 (Product Requirements). Insufficient information will be grounds for rejection of substitution. City shall, within a reasonable period of time after having received a request for substitution, issue in writing its decision as to whether the proposed substitute item is an "or equal" item. City's decision shall be conclusive on all Bidders.

b. Approved substitutions shall become part of Record Documents.

c. Substitutions may be requested after submitting Bids and Award of Contract only in accordance with requirements specified in Section 01600 (Product Requirements).

d. As further limitation on Bidder's privilege to substitute items, City has found that certain items are designed as City standards and certain items are designed to match existing items in use on a particular public improvement, either completed or in the course of completion. As to such items, City will not permit substitution. City will not permit substitutions for the following items:

   (i) NONE LISTED

15. **WAGE RATES.** Contractor shall pay prevailing wages to any worker(s) employed by Contractor or any of its subcontractors under this Contract. The term "worker" is defined under California Labor Code Sections 1723 and 1772. A prevailing wage is the basic hourly rate the majority of workers in a particular craft or classification earn. The prevailing wage also is based on the locality and nearest labor market. The California Department of Industrial Relations annually determines prevailing wage for various crafts, job classifications and job types. The general prevailing rates of per diem wages for each craft, classification, or type of worker needed to perform the Work required under this Contract, as determined by the State of California Department of Industrial Relations (the "DIR"), are available from the Division of Labor Standards, 455 Golden Gate Avenue, San Francisco, CA 94102 (P.O. Box 420603, San Francisco, CA 94142-0603) or on the DIR website at www.dir.ca.gov/dlsr. Also, Contractor shall post the applicable prevailing wage rates at the Site.

16. **EQUAL EMPLOYMENT OPPORTUNITY.** Contractor shall comply with all applicable federal, state, and local laws, rules, and regulations in regard to nondiscrimination in employment because of race, color, ancestry, national origin, religion, sex, marital status, age, medical conditions, disability, or any other reason.

17. **BID OPENING**. City will open all Bidders' Envelopes "A," immediately after the bid submittal deadline on the date specified in paragraph 1 above, initially evaluate them for responsiveness, and determine an Apparent Low Bidder as specified herein. City will not open Envelopes "B" publicly, and except for the Apparent Low Bidder's Envelope "B" (or as otherwise provided in this Document 00200), they will remain unopened.

18. **DETERMINATION OF APPARENT LOW BIDDER (Envelope "A").** Apparent Low Bid will be based solely on the total amount of all Bid items (including any alternates) based on assumptions contained in Document 00400 (Bid Form). All Bidders are required to submit Bids on all Bid items (including any alternates).

19. **EVALUATION OF BIDDER RESPONSIBILITY (Envelope "B").**

    a. City will open Apparent Low Bidder's Envelope "B" and check its contents for compliance with paragraph 5 above and this paragraph 19. City will notify Apparent Low Bidder in writing of any deficiencies found and will provide Bidder the opportunity to respond in writing with reasonable clarifications but will not allow any changes in the nature of Bidder as a business entity.

    b. If any Apparent Low Bidder is determined to be non-responsive or non-responsible, City may open the next Apparent Low Bidder's Envelope "B" pursuant to any procedures determined in its reasonable discretion, and proceed for all purposes as if this Apparent Low Bidder were the original Apparent Low Bidder. City shall use reasonable efforts to make the responsive responsible Apparent Low Bidder's Envelope "B" public on the fifth Day following opening of the Bidders' Envelope "A"s, subject to paragraph 27 below.

    c. Document 00450 sets forth certain minimum criteria for a Bidder to be found responsible.

    d. Minimum licensing requirements including evidence of a valid California "A and C10" contractor's license for the Bidder and evidence of requisite licenses for Key Personnel of Bidder or any designated Subcontractor(s).

20. **BID EVALUATION.** City may reject any or all Bids and waive any informalities or minor irregularities in the Bids. City also reserves the right, in its discretion, to reject any or all Bids and to re-bid the Project. City reserves the right to reject any or all nonconforming, non-responsive, unbalanced, or conditional Bids, and to reject the Bid of any Bidder if City believes that it would not be in the best interest of Project to make an award to that Bidder, whether because the Bid is not responsive or the Bidder is unqualified or of doubtful financial ability or fails to meet any other pertinent standard or criteria established by City. For purposes of this paragraph, an "unbalanced Bid" is one having nominal prices for some work items and enhanced prices for other work items.

    a. In evaluating Bids, City will consider Bidders' qualifications, whether or not the Bids comply with the prescribed requirements, unit prices and other data, as may be requested in Document 00400 (Bid Form) or prior to the Notice of Award.

    b. City may conduct reasonable investigations and reference checks of Bidder, proposed Subcontractors, suppliers and other persons and organizations as City deems necessary to assist in the evaluation of any Bid and to establish Bidder's responsibility, qualifications, financial ability, proposed Subcontractors, suppliers, and other persons and organizations to perform and furnish the Work in accordance with the Contract Documents to City's satisfaction within the prescribed time. Submission of a Bid constitutes Bidder's consent to the foregoing. City shall have the right to consider information provided by sources other than Bidder. City shall also have the right to communicate directly with Bidder's surety regarding Bidder's bonds.

c. Discrepancies between the multiplication of units of Work and unit prices will be resolved in favor of the unit prices. Discrepancies between the indicated sum of any column of figures and the correct sum thereof will be resolved in favor of the correct sum. Discrepancies between written words and figures will be resolved in favor of the words.

d. Quantities stated in the Bidding Documents are approximate only and are subject to correction upon final measurement of the Work, and are subject further to the rights reserved by the City to increase or diminish the amount of work under any classification as advantages to design or construction needs require.

e. City may determine whether a Bidder is qualified in its sole discretionary judgment.

21. **AWARD.** If the Contract is to be awarded, it will be awarded to the lowest responsible responsive Bidder. Following completion of all required City procedures and receipt of all City approvals, City will issue Document 00510 (Notice of Award) to successful Bidder.

22. **BID PROTEST.** Any Bid protest must be submitted in writing to the City's Clerks office (Attention: Kevin Keating, Acting Division Manager, Electric Engineering), before 3:30 p.m. of the tenth ($10^{th}$) day following opening of Bidders' Envelope "A"s.

a. The initial protest document must contain a complete statement of the basis for the protest.

b. The protest must refer to the specific portion of the document that forms the basis for the protest.

c. The protest must include the name, address, and telephone number of the person representing the protesting party.

d. Only Bidders who the City otherwise determines are responsive and responsible are eligible to protest a Bid; protests from any other Bidder will not be considered. In order to determine whether a protesting Bidder is responsive and responsible, City may open and evaluate information contained in any protesting Bidder's Envelope "B", and conduct the same investigation and evaluation as City is entitled to take regarding an Apparent Low Bidder. Any such opened Envelope "B" shall also be subject to all provisions of paragraph 27.

e. The party filing the protest must concurrently transmit a copy of the initial protest document and any attached documentation to all other parties with a direct financial interest that may be adversely affected by the outcome of the protest. Such parties shall include all other Bidders who appear to have a reasonable prospect of receiving an award depending upon the outcome of the protest.

f. The procedure and time limits set forth in this paragraph are mandatory and are Bidder's sole and exclusive remedy in the event of Bid protest. Bidder's failure to comply with these procedures shall constitute a waiver of any right to further pursue the Bid protest, including filing a Government Code Claim or legal proceedings. A Bidder may not rely on a protest submitted by another Bidder, but must timely pursue its own protest.

23. **POST-NOTICE OF AWARD REQUIREMENTS.** After Notice of Award, the successful Bidder must execute and submit the following documents as indicated below.

a. Submit the following documents to City by 5:00 p.m. of the 20th day following Notice of Award. Execution of Contract by City depends upon approval of these documents:

1) Document 00520 (Agreement): To be executed by successful Bidder. Submit four originals, each bearing an original signature.

2) Document 00610 (Construction Performance Bond): To be executed by successful Bidder and surety, in the amount set forth in Document 00610 (Construction Performance Bond). Submit one original.

3) Document 00620 (Construction Labor and Material Payment Bond): To be executed by successful Bidder and surety, in the amount set forth in Document 00620 (Construction Labor and Material Payment Bond). Submit one original.

4) Insurance certificates and endorsements required by Document 00822 (Insurance). Submit one original set.

5) One complete set of documentary information received or generated by successful Bidder in preparation of Bid prices for its Bid, as set forth in Document 00670 (Escrow Bid Documents).

6) The Guaranty in the form set forth in Document 00630 (Guaranty). Submit **four** (4) originals, each bearing an original signature.

b. City shall have the right to communicate directly with Apparent Low Bidder's proposed performance bond surety, to confirm the performance bond. City may elect to extend the time to receive faithful performance and labor and material payment bonds.

c. Successful Bidder's failure to submit the documents required herein, in a proper and timely manner, entitles City to rescind its award, and to cause Bidder's Bid security to be forfeited as provided herein.

24. **FAILURE TO EXECUTE AND DELIVER DOCUMENTS.** If Bidder to whom Contract is awarded shall, within the period described in paragraph 23(a) of this Document 00200, fail or neglect to execute and deliver all required Contract Documents and file all required bonds, insurance certificates, and other documents, City may, in its sole discretion, foreclose on Bidder's deposit surety bond, or deposit Bidder's cashier's check or certified check for collection, and retain the proceeds thereof as liquidated damages for Bidder's failure to enter into the Contract Documents. Bidder agrees that calculating the damages City may suffer as a result of Bidder's failure to execute and deliver all required Contract Documents would be extremely difficult and impractical and that the amount of Bidder's required Bid security shall be the agreed and presumed amount of City's damages. In addition, upon such failure City may determine the next Apparent Low Bidder and proceed accordingly.

25. **MODIFICATION OF COMMENCEMENT OF WORK.** City expressly reserves the right to modify the date for the Commencement of Work under the Contract and to independently perform and complete work related to the Project. City accepts no responsibility to Contractor for any delays attributed to its need to complete independent work at the Site.

26. **WITHDRAWAL OF BIDS.** Bidders may withdraw their Bids at any time prior to the Bid opening time fixed in this Document 00200, only by written request for the withdrawal of Bid filed with the City at the Office of the City Clerk. Bidder or its duly authorized representative shall execute request to withdraw Bid. The submission of a Bid does not commit the City to award a contract for the Project, to pay costs incurred in the preparation of a Bid, or to procure or contract for any goods or services.

27. **PUBLIC RECORDS ACT REQUESTS.**

a. Per the Public Records Act, City will make available to the public Bidder's SOQ (if Bidder's Envelope "B" is opened), all correspondence and written questions submitted during the Bid period, all Bid submissions opened in accordance with the procedures of this Document 00200, and all subsequent Bid evaluation information. All submissions not opened will remain sealed and eventually be returned to the submitter. Except as otherwise required by law, City will not disclose trade secrets or proprietary financial information submitted that has been designated confidential by Bidder (including but not limited to the SOQ). Any such trade secrets or proprietary financial information that a Bidder believes should be exempted from disclosure shall be specifically identified and marked as such. Blanket-type identification by designating whole pages or sections shall not be permitted and shall be invalid. The specific information must be clearly identified as such.

b. Upon a request for records regarding this Bid, City will notify Bidder involved within ten (10) days from receipt of the request of a specific time when the records will be made available for inspection. If the Bidder timely identifies any "proprietary, trade secret, or confidential commercial or financial" information that Bidder determines is not subject to public disclosure, and requests City to refuse to comply with the records request, Bidder shall take all appropriate legal action and defend City's refusal to produce the information in all forums; otherwise, City will make such information available to the extent required by applicable law, without restriction.

c. Information disclosed in the SOQ (if Envelope "B" is opened) and the attendant submissions are the property of City unless Bidder makes specific reference to data that is considered proprietary. Subject to the requirements in the Public Records Act, reasonable efforts will be made to prevent the disclosure of information except on a need-to-know basis during the evaluation process.

28. **CONFORMED CONSTRUCTION DOCUMENTS.** Following Award of Contract, City will prepare a conformed set of Contract Documents reflecting Addenda issued during bidding, which will, failing objection, constitute the approved set of Contract Documents.

29. **DEFINITIONS.** All abbreviations and definitions of terms used in this Document 00200 are set forth in Section 01420 (References and Definitions).

END OF DOCUMENT

THIS SECTION

INTENTIONALLY

LEFT BLANK

# DOCUMENT 00210

# INDEMNITY AND RELEASE AGREEMENT

| _____ | _____ |
|---|---|
| Date | Potential Bidder (type or print company name) |

CITY: SANTA CLARA, CALIFORNIA

SITE: VARIOUS LOCATIONS WITHIN THE CITY OF SANTA CLARA, CA.

PROJECT: PALM SUBSTATION 60kV EXTENSION PROJECT

In consideration of the above-referenced City's permitting the undersigned potential bidder ("Bidder") to have access to, and to conduct investigations, tests and/or inspections on, the Site, Bidder hereby agrees as follows:

1. To the greatest extent permitted by law, Bidder hereby releases, and shall defend, indemnify and hold harmless City, and its officers, employees, consultants (including without limitation Consulting Engineer), representatives, and agents, and all other parties having any other interest in the Site, against any claim or liability, including attorney's fees, arising from or relating to any Site-related access, investigation, test, inspection and/or other activity conducted by Bidder or any of Bidder's officers, employees, consultants, representatives, and/or agents, regardless of whether claim or liability is caused in part by the negligence of City or by any released and indemnified party.

2. Bidder hereby waives the provisions of California Civil Code Section 1542 which provides as follows:

   > A general release does not extend to claims that the creditor does not know or suspect to exist in his favor at the time of executing the release, which if known by him, must have materially affected his settlement with the debtor.

3. Bidder shall repair any damage to the Site or adjacent property resulting from activities authorized hereunder, and comply with and be subject to all other requirements and obligations described or referenced in Document 00320 (Geotechnical Data and Existing Conditions).

4. Attached hereto (or to be delivered separately before Bidder's visit to the Site) is a certificate for comprehensive general liability insurance satisfying the requirements of Document 00700 (General Conditions).

5. Although this Indemnity and Release Agreement is not a Contract Document (see Document 00520 [Agreement]), it shall be fully effective and binding regardless of whether Bidder submits a Bid for the subject Project, is awarded a contract for the Project, or otherwise.

| | |
|---|---|
| By: _____ | By: _____ |
| Signature | Signature |
| Its: _____ | Its: _____ |
| Title<br>(If Corporation: Chairman, President, or Vice President) | Title<br>(If Corporation: Chairman, President, or Vice President) |

END OF SECTION

# DOCUMENT 00250

# BID CONTENTS, EVALUATION, SELECTION AND AWARD

1. This Document summarizes the required Bid contents and City's procedures for opening and evaluating Bids and making award for:

**CITY CONTRACT NUMBER 2375B**

**THE PALM SUBSTATION 60kV EXTENSION PROJECT**

2. All abbreviations and definitions of terms used herein are defined in the Division 1 Specifications, Section 01420 References and Definitions.

3. Bidders shall submit Bids in two (2) separate sealed Envelopes marked "Envelope A" and "Envelope B."

4. At the designated time of Bid opening, City will open the Envelope A submitted by each Bidder, initially evaluate it for responsiveness, and determine an Apparent Low Bidder as specified herein. City will not open the Envelope B submitted by each Bidder publicly, and except for the Apparent Low Bidder's Envelope B (or as otherwise provided in this Document 00250), they will remain unopened.

5. **CONTENTS OF ENVELOPE A - BID PRICE** (Checklist). Envelope A shall include:

   5.1 Document 00400 - Bid Form.

   5.2 Bid Security (Bidder's Bond) supplied in accordance with Document 00200 Instructions to Bidders.

   5.3 Document 00420 – Bidder's Registration Form.

   5.4 Document 00421 - Declaration of Contractor's License Status.

   5.5 Document 00430 - Subcontractors List.

   5.6 Document 00440 – Affidavit of Compliance with Ethical Standards.

   5.7 Document 00481 - Non-Collusion Affidavit.

6 **CONTENTS OF ENVELOPE B - BIDDER QUALIFICATIONS**. (Checklist) Envelope B shall include:

   6.1 Document 00450 - Statement of Qualifications and Statement of Qualifications submitted in accord with Document 00450.

   6.2 Document 00654 - Worker's Compensation Insurance Statement.

7. **DETERMINATION OF APPARENT LOW BIDDER**. City will determine Apparent Low Bidder based on the total of the base bid items.

## 8. EVALUATION OF BIDDER RESPONSIBILITY (ENVELOPE B)

8.1 City will open Apparent Low Bidder's Envelope B and check its contents for compliance with Paragraph 6 above and this Paragraph 8. City will notify Apparent Low Bidder in writing of any deficiencies found and will provide Bidder the opportunity to respond in writing within 2 business days, with reasonable clarifications but will not allow any changes in the nature of Bidder as a business entity.

8.2 City will determine Bidder responsibility in accord with document 00450 Statement of Qualifications for Construction Work.

END OF DOCUMENT

DOCUMENT 00400

# BID FORM

| | |
|---|---|
| **A** | To be submitted as part of Envelope "A" by the time and date specified in Document 00200 (Instructions to Bidders), paragraph 1. |

THIS BID IS SUBMITTED BY:

_____

(Firm/Company Name)

**CITY CONTRACT NUMBER 2375B**

**PALM 60 kV TRANSMISSION EXTENSION PROJECT**

1. The undersigned Bidder proposes and agrees, if this Bid is accepted, to enter into an agreement with the City of Santa Clara ("City") in the form included in the Contract Documents, Document 00520 (Agreement), to perform and furnish all Work as specified or indicated in the Contract Documents for the Contract Sum and within the Contract Time indicated in this Bid and in accordance with all other terms and conditions of the Contract Documents.

2. Bidder accepts all of the terms and conditions of the Contract Documents, Document 00100 (Advertisement for Bids), and Document 00200 (Instructions to Bidders), including, without limitation, those dealing with the disposition of Bid Security. This Bid will remain subject to acceptance for 90 Days after the day of Bid opening.

3. In submitting this Bid, Bidder represents:

   (a) Bidder has examined all of the Contract Documents and the following Addenda (receipt of all of which is hereby acknowledged).

| Addendum No. | Addendum Date | Signature of Bidder |
|---|---|---|
| | | |
| | | |
| | | |
| | | |

   (b) Bidder has visited the Site and performed all tasks, research, investigation, reviews, examinations, and analysis and given notices, regarding the Project and the Site, as set forth in Document 00520 (Agreement), Article 5.

   (c) Bidder has received and examined copies of the following technical specifications on City-provided, Contractor-installed equipment. (N/A)

   (d) Bidder has given City prompt written notice of all conflicts, errors, ambiguities, or discrepancies that it has discovered in or among the Contract Documents and as-built drawings and actual conditions and the written resolution thereof through Addenda issued by City is acceptable to Contractor.

4. Based on the foregoing, Bidder proposes and agrees to fully perform the Work within the time stated and in strict accordance with the Contract Documents for the following sums of money listed in the following Schedule of Bid Prices:

**SCHEDULE OF BID PRICES**

All Bid items, including lump sums and unit prices, must be filled in completely. Bid items are described in Section 01100 (Summary of Work). Quote in figures only, unless words are specifically requested.

| ITEM | DESCRIPTION | MATERIALS | LABOR | TOTAL |
|---|---|---|---|---|
| 1 | BONDS AND INSURANCE | | | |
| 2 | SAFETY PLAN AND PROGRAMS | | | |
| 3 | MOBILIZATION/DEMOBILIZATION | | | |
| 4 | TOTAL EXHIBIT A | | | |
| 5 | TOTAL EXHIBIT B | | | |
| 6 | TOTAL EXHIBIT C | | | |
| 7 | RECORD DWGS. | | | |
| 8 | ALL OTHER WORK (work not separately provided for above) | | | |
| | **COLUMN TOTALS** | | | |

| | | |
|---|---|---|
| | **LUMP SUM BID** | $ |
| **LUMP SUM BID in words** | ..... | |

5. Subcontractors for work included in all Bid items are listed on the attached Document 00430 (Subcontractors List).

6. The undersigned Bidder understands that City reserves the right to reject this Bid.

7. If written notice of the acceptance of this Bid, hereinafter referred to as Notice of Award, is mailed or delivered to the undersigned Bidder within the time described in paragraph 2 of this Document 00400 or at any other time thereafter before it is withdrawn, the undersigned Bidder will execute and deliver the documents required by Document 00200 (Instructions to Bidders) within the times specified therein. These documents include, but are not limited to, Document 00520 (Agreement), Document 00610 (Construction Performance Bond), and Document 00620 (Construction Labor and Material Payment Bond).

8. Notice of Award or request for additional information may be addressed to the undersigned Bidder at the address set forth below.

9. The undersigned Bidder herewith encloses cash, a cashier's check, or certified check of or on a responsible bank in the United States, or a corporate surety bond furnished by a surety authorized to do a surety business in the State of California, in form specified in Document 00200 (Instructions to Bidders), in the amount of ten percent (10%) of the total of Bid items 1 through 22 and made payable to the "City of Santa Clara".

10. The undersigned Bidder agrees to commence Work under the Contract Documents on the date established in Document 00700 (General Conditions) and to complete all work within the time specified in Document 00520 (Agreement). The undersigned Bidder acknowledges that City has reserved the right to delay or modify the commencement date. The undersigned Bidder further acknowledges City has reserved the right to perform independent work at the Site, the extent of such work may not be determined until after the opening of the Bids, and that the undersigned Bidder will be required to cooperate with such other work in accordance with the requirements of the Contract Documents.

11. The undersigned Bidder agrees that, in accordance with Document 00700 (General Conditions), liquidated damages for failure to complete all Work in the Contract within the time specified in Document 00520 (Agreement) shall be as set forth in Document 00520 (Agreement).

12. The names of all persons interested in the foregoing Bid as principals are:

    (IMPORTANT NOTICE: If Bidder or other interested person is a corporation, give the legal name of corporation, state where incorporated, and names of president and secretary thereof; if a partnership, give name of the firm and names of all individual co-partners composing the firm; if Bidder or other interested person is an individual, give first and last names in full).

//

//

//

//

//

//

//

//

//

//

**NAME OF BIDDER:** _____

licensed in accordance with an act for the registration of Contractors, and with license number: _____

Expiration: _____.

_____ _____

Where incorporated, if applicable

_____

_____

Principals

I certify (or declare) under penalty of perjury under the laws of the State of California that the foregoing is true and correct.

_____

Signature of Bidder

NOTE: If Bidder is a corporation, set forth the legal name of the corporation together with the signature of the officer or officers authorized to sign contracts on behalf of the corporation. If Bidder is a partnership, set forth the name of the firm together with the signature of the partner or partners authorized to sign contracts on behalf of the partnership.

Business Address: _____

_____

_____

Officers authorized to sign contracts: _____

_____

_____

Telephone Number(s): _____

Fax Number(s): _____

Date of Bid: _____

END OF DOCUMENT

# SEGMENT A
# Kifer Receiving Station to Norman Avenue Junction (#33)
# 60 kV Transmission Reconductor
# Scope of Work
# (List of Tasks)

1. Contractor to mobilize, perform construction survey and reconductor of the existing 2-bundle 954 kcmil AAC "Magnolia" conductor with 2-bundle 715 kcmil ACCR "Stilt" conductor, as shown on SVP's Drawing 16093, Rev 0, Sheets A-1 and A-2 and these technical specifications.

2. Contractor must remove and install wood poles, guys, anchors, and hardware as detailed on the SVP's Drawing 16093, Rev 0, Sheets A-1 and A-2 and the Structure Data Sheet. The line has some 12 kV and secondary overhead circuitry along its length. The contractor shall be responsible for all necessary line work (clearance, grounding, preparation, work execution, cleanup, etc.) associated with any distribution underbuild to maintain service to affected customers. Any modifications to the underbuild circuitry will be considered permanent construction and shall be constructed accordingly.

3. Contractor is to sag all new conductors and re-sag any existing conductors as necessary to maintain proper clearances and match at a final condition as appropriate.

4. Contractor is to submit all outage and clearance requests to SVP Electric Control a minimum of five (5) days before the requested clearance date. SVP Electric Control may deny outage and clearance requests due to conflicts with other scheduled SVP maintenance or operation activities. Clearance requests submitted with less than five (5) days advance notice may be denied and any subsequent project delay attributed to such untimely requests is Contractor's sole responsibility.

5. **Outages on the existing KRS to NAJ 60 kV line are limited to a maximum of ten (10) hours per day and the line must be returned to full operation at the end of each workday. Shoe-fly construction should be minimized and used only as a last resort if the required outage clearances to work on the 60 kV lines cannot be accommodated by SVP. If any outages are required on any underbuilt circuitry, the schedule and duration shall be reviewed and approved by SVP.**

**Kifer Receiving Station to Norman Avenue Junction 60 kV Transmission Reconductor Units**

Section 1 – STRUCTURE UNITS

A pole unit consists of one (1) wood pole. The unit price shall include receiving, unloading, sorting, storing, distribution to structure sites, and installation per contract drawings and specifications. Insulator, Conductor, Anchor, and Guy Assembly Units are not included as a part of this bid unit.

Payment for pole units will be on a unit price basis. The unit price payment shall include all costs and expenses to provide set-in-place wood pole units, as described in the contract drawings and specifications.

| Unit | Number of Units | Unit Price | | | | Total |
|---|---|---|---|---|---|---|
| | | Labor | Materials | | L & M | |
| | | | Owner | Contractor | | |
| Pole 35' Class 4 | 0 | | N/A | | | |
| Pole 65' Class 1 | 1 | | N/A | | | |
| Pole 70' Class H2 | 0 | | N/A | | | |
| | | | | | | |
| | | | | | | |
| | | | | | | |

Total Section 1 _____

_____

Bidder

**Kifer Receiving Station to Norman Avenue Junction 60 kV Transmission Reconductor Units**

Section 2 – INSULATOR ASSEMBLY UNITS

An insulator assembly unit consists of the insulator and all necessary hardware, crossarms, and material needed to attach the insulator to a pole unit. The unit price shall include receiving, unloading, sorting, storing, distribution to structure sites, and installation per contract drawings and specifications. Pole, Conductor, Anchor, and Guy Assembly Units are not included as a part of this bid unit.

Payment for insulator units will be on a unit price basis. The unit price payment shall include all costs and expenses to provide in place insulator units, as described in the contract drawings and specifications.

| Unit | Number of Units | Unit Price | | | | Total |
|---|---|---|---|---|---|---|
| | | Labor | Materials | | L & M | |
| | | | Owner | Contractor | | |
| Insulator, Post Type, Horizontal, Single Trunnion, Porcelain C043621-1 | 6 | | N/A | | | |
| Insulator, Post Type, Horizontal, Double Trunnion, Porcelain OH 750-6 | 0 | | N/A | | | |
| Insulator, Suspension, 60kV, non-ceramic OH 750-5,6,7 | 0 | | N/A | | | |
| | | | | | | |

Total Section 2 _____

_____
Bidder

**Kifer Receiving Station to Norman Avenue Junction 60 kV Transmission**
**Reconductor Units**
Section 3 – CONDUCTOR ASSEMBLY UNITS

A conductor assembly unit consists of 1000 linear feet of a single overhead conductor and includes all necessary sleeves for splicing, armor rod or line guards, and other material needed to attach the conductor to an insulator unit. The length of conductor shall be determined by taking the sum of all straight, horizontal span distances from center to center of the poles carrying the conductor. The unit price shall include receiving, unloading, sorting, storing, distribution to structure sites, and installation of the conductor per contract drawings and specifications. The Contractor shall be responsible for all costs related to conductor reel disposal. Pole, Insulator, Anchor, and Guy Assembly Units are not included as a part of this bid unit.

Payment for conductor units will be on a unit price basis. The unit price payment shall include all costs and expenses to provide in place conductor units, as described in the contract drawings and specifications.

| Unit | Number of Units | Unit Price | | | | Total |
|---|---|---|---|---|---|---|
| | | Labor | Materials | | L & M | |
| | | | Owner | Contractor | | |
| 715 kcmil ACCR "Stilt" | 26.2 | | N/A | | | |
| Clamp, Trunnion, Single 715 ACCR "Stilt" with armor rod | 138 | | N/A | | | |
| Suspension Assembly Thermolign, 715 ACCR "Stilt" | 24 | | | | | |
| Deadend, Compression – 715 ACCR "Stilt" | 72 | | N/A | | | |
| Yoke Assembly, Strain, with Socket Clevis and two Ball Clevises – | 0 | | N/A | | | |
| | | | | | | |

Total Section 3 _____

_____
Bidder

**Kifer Receiving Station to Norman Avenue Junction 60 kV Transmission Reconductor Units**

Section 4 – ANCHOR ASSEMBLY UNITS

An anchor assembly unit consists of the installation of an anchor with rod and includes all hardware needed to attach the anchor unit to a guy assembly unit. The unit price shall include receiving, unloading, sorting, storing, distribution to structure sites, and installation of the anchor per contract drawings and specifications. Pole, Insulator, Conductor, and Guy Assembly Units are not included as a part of this bid unit.

Payment for anchor units will be on a unit price basis. The unit price payment shall include all costs and expenses to provide in place anchor units, as described in the contract drawings and specifications.

| Unit | Number of Units | Unit Price | | | | Total |
|---|---|---|---|---|---|---|
| | | Labor | Materials | | L & M | |
| | | | Owner | Contractor | | |
| Guy Anchor, Screw, Double, 10", 1 ½ " hub with 1" diameter x 7' triple eye rod. SVP Bin 83173 | 0 | | N/A | | | |
| Check, Test and Tighten Existing Guys | 24 | | N/A | | | |
| | | | | | | |

Total Section 4 _____

_____
Bidder

**Kifer Receiving Station to Norman Avenue Junction 60 kV Transmission Reconductor Units**

Section 5 – GUY ASSEMBLY UNITS

A guy assembly unit consists of the installation of guy wire for pole to pole guys, or pole to ground guys. It includes all hardware, strain insulators, and protectors needed to attach the guy assembly unit to a pole unit and a pole, or anchor, unit. The unit price shall include receiving, unloading, sorting, storing, distribution to structure sites, and installation of the anchor per contract drawings and specifications. Pole, Insulator, Conductor, and Anchor Assembly Units are not included as a part of this bid unit.

Payment for guy assembly units will be on a unit price basis. The unit price payment shall include all costs and expenses to provide in place guy assembly units, as described in the contract drawings and specifications.

| Unit | Number of Units | Unit Price | | | | Total |
|---|---|---|---|---|---|---|
| | | Labor | Materials | | L & M | |
| | | | Owner | Contractor | | |
| 1/4" Down Guy | 0 | | N/A | | | |
| 5/16" Down Guy | 0 | | N/A | | | |
| 3/8" Down Guy | 0 | | N/A | | | |
| 3/8" Head Guy | 0 | | N/A | | | |
| 7/16" Down Guy | 0 | | N/A | | | |
| Check, Test and Tighten Existing Guys | 30 | | N/A | | | |
| | | | | | | |

Total Section 5 _____

_____
Bidder

**Kifer Receiving Station to Norman Avenue Junction 60 kV Reconductor Units**
Section 6 – LINE TERMINATION UNITS

A line termination unit consists of the furnishing of labor and equipment needed for disassembling the existing line termination system (2-bundle 954 kcmil AAC conductors) and installing the new line termination system for the 2-bundle 715 kcmil ACCR conductors at both Kifer Receiving Station and Norman Avenue Junction. It includes all hardware needed to attach the new 2-bundle 715 kcmil ACCR conductors to the bus termination or disconnect switch terminal.

Payment for line termination units will be on a unit price basis. The unit price payment shall include all costs and expenses associated with line termination units, as described in the contract drawings and specifications.

| Unit | Number of Units | Unit Price | | | | Total |
|---|---|---|---|---|---|---|
| | | Labor | Materials | | L & M | |
| | | | Owner | Contractor | | |
| At Kifer Receiving Station – | | | | | | |
| Bolted 2-715 kcmil ACCR to 4-Hole NEMA pad (minimum 2000 amp capacity) | 3 | | N/A | | | |
| | | | | | | |
| At Norman Avenue Junction – | | | | | | |
| Bolted 2-715 kcmil ACCR to 4-Hole NEMA pad (minimum 2000 amp capacity) | 0 | | N/A | | | |
| | | | | | | |
| | | | | | | |

Total Section 6 _____

_____
BIDDER

**Kifer Receiving Station to Norman Avenue Junction 60 kV Transmission Reconductor Units**

Section 7 – REMOVAL UNITS

A removal unit consists of the furnishing of labor and equipment needed for disassembling the existing transmission system. Removal of the structures will include dismantling and transporting or transferring the following from the project job site(s).

1. Poles
2. Insulator Assemblies
3. Conductors
4. Anchors
5. Guy Assemblies

The removed materials will become the property of the Contractor and shall be removed from the worksite on a daily basis.

Payment for removal units will be on a unit price basis. The unit price payment shall include all costs and expenses associated with removal units, as described in the contract drawings and specifications.

| Unit | Number of Units | Unit Price | | | | Total |
|---|---|---|---|---|---|---|
| | | Labor | Materials | | L & M | |
| | | | Owner | Contractor | | |
| Wood Pole, 65' Cl. 1 | 1 | | N/A | | | |
| 60 kV Suspension Type Insulator | 0 | | N/A | | | |
| 60 kV Post Type Insulator | 0 | | N/A | | | |
| 954 AAC "Magnolia" Conductor | 26.2 | | N/A | | | |
| 954 AAC DE Clamp SVP Bin 71190 | 72 | | N/A | | | |
| 954 AAC Suspension Clamp | 24 | | N/A | | | |
| 954 AAC Trunnion Clamp SVP Bin 71173 | 138 | | N/A | | | |
| 3/8" Down Guy | 2 | | N/A | | | |
| | | | | | | |
| | | | | | | |

Total Section 7 _____

_____

BIDDER

**Kifer Receiving Station to Norman Avenue Junction 60 kV Transmission**
**Reconductor Units**
Line Proposal Summary

| | |
|---|---|
| Section 1 – Pole Units | _____ |
| Section 2 – Insulator Assembly Units | _____ |
| Section 3 – Conductor Assembly Units | _____ |
| Section 4 – Anchor Assembly Units | _____ |
| Section 5 – Guy Assembly Units | _____ |
| Section 6 – Line Termination Units | _____ |
| Section 7 – Removal Units | _____ |
| Total Segment A Construction Costs | _____ |

_____
Bidder

END OF EXHIBIT A

# SEGMENT B
# Norman Avenue Junction (#33) to Palm Station 60 kV Transmission Construction
# Scope of Work
# (List of Tasks)

1. Contractor must mobilize, perform construction survey and construction of 2-bundle 715 kcmil ACCR "Stilt" conductor 60 kV transmission structures as shown on SVP's Drawing 16093, Rev 0, Sheets B-1 and B-2 and these technical specifications.

2. Contractor must install wood poles, guys, anchors, and hardware as detailed on the SVP Drawing 16093, Rev 0, Sheets A-1 and A-2 and the Structure Data Sheet. The line has some 12 kV and secondary overhead circuitry along its length which must be transferred to the new 60 kV power poles to be installed. Contractor shall be responsible for all necessary line work (clearance, grounding, preparation, work execution, cleanup, etc.) associated with any distribution underbuild to maintain service to affected customers. Any modifications to the underbuild circuitry will be considered permanent construction and shall be constructed accordingly.

3. Contractor must sag all new conductors and re-sag any existing distribution conductors as necessary to maintain proper clearances and match at a final condition as appropriate.

4. Contractor must submit all outage and clearance requests to SVP Electric Control a minimum of five (5) days before the requested clearance date. SVP Electric Control may deny outage and clearance requests due to conflicts with other scheduled SVP maintenance or operation activities. Clearance requests submitted with less than five (5) days advance notice may be denied and any subsequent project delay attributed to such untimely requests is the contractor's sole responsibility.

5. **Outages on the existing distribution system are limited to a maximum of ten (10) hours per day and the line must be returned to full operation at the end of each workday. Shoe-fly construction should be minimized and used only as a last resort if the required outage clearances to work on the 60 kV lines cannot be accommodated by SVP. If any outages are required on any underbuilt circuitry, the schedule and duration shall be reviewed and approved by SVP.**

**Norman Avenue Junction to Palm Station 60kV Transmission**
**Construction Units**
Section 1 – STRUCTURE UNITS

A wood pole unit consists of one (1) wood pole. The unit price shall include receiving, unloading, sorting, storing, distribution to structure sites, and installation per contract drawings and specifications. Insulator, Conductor, Anchor, and Guy Assembly Units are not included as a part of this bid unit.

A steel pole unit consists of one (1) steel pole. The unit price shall include receiving, modifying, unloading, sorting, storing, distribution to structure sites, and installation per contract drawings and specifications. Insulator, Conductor, Anchor, and Guy Assembly Units are not included as a part of this bid unit. Pole unit shall also include the installation of chain link pole bands.

Payment for pole units will be on a unit price basis. The unit price payment shall include all costs and expenses to provide set-in-place pole units, as described in the contract drawings and specifications.

| Unit | Number of Units | Unit Price | | | | Total |
|---|---|---|---|---|---|---|
| | | Labor | Materials | | L & M | |
| | | | Owner | Contractor | | |
| Pole 65' Wood | 15 | | N/A | | | |
| Pole 75' Wood | 2 | | N/A | | | |
| Pole 85' Wood | 2 | | N/A | | | |
| Pole 57' Steel | 2 | | N/A | | | |
| Pole 65' Steel | 1 | | N/A | | | |
| | | | | | | |

A foundation consists of one (1) caisson-type concrete foundation. The unit price shall include excavation, receiving anchor bolts, cleaning and repairing or replacing rebar cages, unloading, sorting, storing, distribution to structure sites, and installation per contract drawings and specifications.

Payment for foundation units will be on a unit price basis. The unit price payment shall include all costs and expenses to provide in-place foundation units, as described in the contract drawings and specifications.

| Unit | Number of Units | Unit Price | | | | Total |
|---|---|---|---|---|---|---|
| | | Labor | Materials | | L & M | |
| | | | Owner | Contractor | | |
| 6' Dia x 20' Deep | 2 | | N/A | | | |
| 6' Dia x 25' Deep | 1 | | N/A | | | |
| | | | | | | |
| | | | | | | |

Total Section 1 _____

_____
Bidder

**Norman Avenue Junction to Palm Station 60kV Transmission**
**Construction Units**
Section 2 – INSULATOR ASSEMBLY UNITS

An insulator assembly unit consists of the insulator and all necessary hardware, crossarms, and material needed to attach the insulator to a pole unit. The unit price shall include receiving, unloading, sorting, storing, distribution to structure sites, and installation per contract drawings and specifications. Pole, Conductor, Anchor, and Guy Assembly Units are not included as a part of this bid unit.

Payment for insulator units will be on a unit price basis. The unit price payment shall include all costs and expenses to provide in place insulator units, as described in the contract drawings and specifications.

| Unit | Number of Units | Unit Price | | | | Total |
|---|---|---|---|---|---|---|
| | | Labor | Materials | | L & M | |
| | | | Owner | Contractor | | |
| Insulator, Post Type, Horizontal, Single Trunnion, Porcelain C043621-1 | 0 | | N/A | | | |
| Insulator, Post Type, Horizontal, Double Trunnion, Porcelain OH 750-6 | 60 | | N/A | | | |
| Insulator, Suspension, 60kV, non-ceramic OH 750-5,6,7 | 24 | | N/A | | | |
| | | | | | | |

Total Section 2 _____

_____
Bidder

**Norman Avenue Junction to Palm Station 60kV Transmission**
**Construction Units**
Section 3 – CONDUCTOR ASSEMBLY UNITS

A conductor assembly unit consists of 1000 linear feet of a single overhead conductor and includes all necessary sleeves for splicing, armor rod or line guards, and other material needed to attach the conductor to an insulator unit. The length of conductor shall be determined by taking the sum of all straight, horizontal span distances from center to center of the poles carrying the conductor. The unit price shall include receiving, unloading, sorting, storing, distribution to structure sites, and installation of the conductor per contract drawings and specifications. The Contractor shall be responsible for all costs related to conductor reel disposal. Pole, Insulator, Anchor, and Guy Assembly Units are not included as a part of this bid unit.

Payment for conductor units will be on a unit price basis. The unit price payment shall include all costs and expenses to provide in place conductor units, as described in the contract drawings and specifications.

| Unit | Number of Units | Unit Price | | | | Total |
|---|---|---|---|---|---|---|
| | | Labor | Materials | | L & M | |
| | | | Owner | Contractor | | |
| 715 kcmil ACCR "Stilt" | 20.6 | | N/A | | | |
| Clamp, Trunnion, Single 715 ACCR "Stilt" with armor rod | 120 | | N/A | | | |
| Suspension Assembly Thermolign, 715 ACCR "Stilt" | 0 | | | | | |
| Deadend, Compression – 715 ACCR "Stilt" | 48 | | N/A | | | |
| Yoke Assembly, Strain, with Socket Clevis and two Ball Clevises – | 0 | | N/A | | | |
| | | | | | | |

Total Section 3 _____

_____
Bidder

**Norman Avenue Junction to Palm Station 60kV Transmission**
**Construction Units**
Section 4 – ANCHOR ASSEMBLY UNITS

An anchor assembly unit consists of the installation of an anchor with rod and includes all hardware needed to attach the anchor unit to a guy assembly unit. The unit price shall include receiving, unloading, sorting, storing, distribution to structure sites, and installation of the anchor per contract drawings and specifications. Pole, Insulator, Conductor, and Guy Assembly Units are not included as a part of this bid unit.

Payment for anchor units will be on a unit price basis. The unit price payment shall include all costs and expenses to provide in place anchor units, as described in the contract drawings and specifications.

| Unit | Number of Units | Unit Price | | | | Total |
|---|---|---|---|---|---|---|
| | | Labor | Materials | | L & M | |
| | | | Owner | Contractor | | |
| Guy Anchor, Screw, Double, 10", 1-1/2 " Hub with 1" Diameter x 7' Triple-eye Rod. SVP Bin 83173 | 0 | | N/A | | | |
| | | | | | | |
| | | | | | | |

Total Section 4 _____

_____
Bidder

**Norman Avenue Junction to Palm Station 60kV Transmission**
**Construction Units**
Section 5 – GUY ASSEMBLY UNITS

A guy assembly unit consists of the installation of guy wire for pole to pole guys, or pole to ground guys. It includes all hardware, strain insulators, and protectors needed to attach the guy assembly unit to a pole unit and a pole, or anchor, unit. The unit price shall include receiving, unloading, sorting, storing, distribution to structure sites, and installation of the anchor per contract drawings and specifications. Pole, Insulator, Conductor, and Anchor Assembly Units are not included as a part of this bid unit.

Payment for guy assembly units will be on a unit price basis. The unit price payment shall include all costs and expenses to provide in place guy assembly units, as described in the contract drawings and specifications.

| Unit | Number of Units | Unit Price | | | | Total |
|---|---|---|---|---|---|---|
| | | Labor | Materials | | L & M | |
| | | | Owner | Contractor | | |
| 1/4" Down Guy | 0 | | N/A | | | |
| 3/8" Down Guy | 0 | | N/A | | | |
| 7/16" Down Guy | 0 | | N/A | | | |
| | | | | | | |
| | | | | | | |

Total Section 5 _____

_____
Bidder

**Norman Avenue Junction to Palm Station 60kV Transmission**
**Construction Units**
Section 6 – LINE TERMINATION UNITS

A line termination unit consists of the furnishing of labor and equipment needed for disassembling the existing line termination system (1-954 kcmil AAC conductors) and installing the new line termination system for 2-954 kcmil AAC conductors at both Uranium and Walsh. It includes all hardware needed to attach the new 2-954 kcmil AAC conductors to the bus termination or disconnect switch terminal.

Payment for line termination units will be on a unit price basis. The unit price payment shall include all costs and expenses associated with line termination units, as described in the contract drawings and specifications.

| Unit | Number of Units | Unit Price | | | | Total |
|---|---|---|---|---|---|---|
| | | Labor | Materials | | L & M | |
| | | | Owner | Contractor | | |
| At NAJ (#33) | | | | | | |
| Bolted 2-715 kcmil ACCR to 4-Hole NEMA Pad (minimum 2000 amp capacity) | 0 | | N/A | | | |
| | | | | | | |
| At Palm Station | | | | | | |
| Bolted 2-715 kcmil ACCR Conductors to 4-Hole NEMA Pad 45 Degrees (minimum 2000 amp capacity) | 3 | | N/A | | | |
| | | | | | | |

Total Section 6 _____

_____
BIDDER

**Norman Avenue Junction to Palm Station 60kV Transmission**
**Construction Units**
Section 7 – REMOVAL UNITS

A removal unit consists of the furnishing of labor and equipment needed for disassembling the existing transmission system. Removal of the structures will include dismantling and transporting or transferring the following from the project job site(s).

1. Poles
2. Insulator Assemblies
3. Conductors
4. Anchors
5. Guy Assemblies

The removed materials will become the property of the Contractor and shall be removed from the worksite on a daily basis.

Payment for removal units will be on a unit price basis. The unit price payment shall include all costs and expenses associated with removal units, as described in the contract drawings and specifications.

| Unit | Number of Units | Unit Price | | | | Total |
|---|---|---|---|---|---|---|
| | | Labor | Materials | | L & M | |
| | | | Owner | Contractor | | |
| Wood Pole, 65' Cl. 2 | 0 | | N/A | | | |
| 60kV Post Type Insulator | 0 | | N/A | | | |
| 3/8" Down Guy | 0 | | N/A | | | |
| | | | | | | |

Total Section 7 _____

_____
Bidder

**Norman Avenue Junction to Palm Station 60kV Transmission**
**Construction Units**
Line Proposal Summary

| | |
|---|---|
| Section 1 – Structure Units | _____ |
| Section 2 – Insulator Assembly Units | _____ |
| Section 3 – Conductor Assembly Units | _____ |
| Section 4 – Anchor Assembly Units | _____ |
| Section 5 – Guy Assembly Units | _____ |
| Section 6 – Line Termination Units | _____ |
| Section 7 – Removal Units | _____ |
| Total Exhibit B Construction Costs | _____ |

_____
Bidder

END OF SEGMENT B

# Exhibit C – Palm Station to Norman Avenue Junction 60kV Transmission Construction Scope of Work (List of Tasks)

1. Contractor to mobilize, perform construction survey and construct 2-bundle 715 kcmil ACCR "Stilt" conductor, as shown on SVP's Drawing 16093, Rev 0, Sheets C-1 and C-2 and these technical specifications.

2. Contractor is to remove and install wood poles, guys, anchors, and hardware as detailed on the SVP's Drawing 16093, Rev 0, Sheets C-1 and C-2 and the Structure Data Sheet. The line has some 12 kV and secondary overhead circuitry intermittently along its length. The contractor shall be responsible for all necessary line work (clearance, grounding, preparation, work execution, cleanup, etc.) associated with any distribution underbuild to maintain service to affected customers. Any modifications to the underbuild circuitry will be considered permanent construction and shall be constructed accordingly.

3. Contractor is to sag all new conductors and re-sag any existing conductors as necessary to maintain proper clearances and match at a final condition as appropriate.

4. Contractor is to submit all outage and clearance requests to SVP Electric Control a minimum of five (5) days before the requested clearance date. SVP Electric Control may deny outage and clearance requests due to conflicts with other scheduled SVP maintenance or operation activities. Clearance requests submitted with less than five (5) days advance notice may be denied and any subsequent project delay attributed to such untimely requests is Contractor's sole responsibility.

5. **Outages on the distribution line are limited to 8-10 hours per day and the line must be returned to full operation at the end of each workday. Shoe-fly construction should be minimized and used only as a last resort if the required outage clearances to work on the 60kV lines cannot be accommodated by SVP. If any outages are required on any underbuilt circuitry, the schedule and duration shall be reviewed and approved by SVP.**

**Palm Station to Norman Avenue Junction 60kV Transmission**
**Construction Units**
Section 1 – STRUCTURE UNITS

A wood pole unit consists of one (1) wood pole. The unit price shall include receiving, unloading, sorting, storing, distribution to structure sites, and installation per contract drawings and specifications. Insulator, Conductor, Anchor, and Guy Assembly Units are not included as a part of this bid unit.

A steel pole unit consists of one (1) steel pole. The unit price shall include receiving, modifying, unloading, sorting, storing, distribution to structure sites, and installation per contract drawings and specifications. Insulator, Conductor, Anchor, and Guy Assembly Units are not included as a part of this bid unit. Pole unit shall also include the installation of chain link pole bands.

Payment for pole units will be on a unit price basis. The unit price payment shall include all costs and expenses to provide set-in-place pole units, as described in the contract drawings and specifications.

| Unit | Number of Units | Unit Price | | | | Total |
|---|---|---|---|---|---|---|
| | | Labor | Materials | | L & M | |
| | | | Owner | Contractor | | |
| Pole 65' Wood | 15 | | N/A | | | |
| Pole 75' Wood | 2 | | N/A | | | |
| Pole 85' Wood | 2 | | N/A | | | |
| Pole 57' Steel | 2 | | N/A | | | |
| Pole 65' Steel | 1 | | N/A | | | |
| | | | | | | |

A foundation consists of one (1) caisson-type concrete foundation. The unit price shall include excavation, receiving anchor bolts, cleaning and repairing or replacing rebar cages, unloading, sorting, storing, distribution to structure sites, and installation per contract drawings and specifications.

Payment for foundation units will be on a unit price basis. The unit price payment shall include all costs and expenses to provide in-place foundation units, as described in the contract drawings and specifications.

| Unit | Number of Units | Unit Price | | | | Total |
|---|---|---|---|---|---|---|
| | | Labor | Materials | | L & M | |
| | | | Owner | Contractor | | |
| 6' Dia x 20' Deep | 2 | | N/A | | | |
| 6' Dia x 25' Deep | 1 | | N/A | | | |
| | | | | | | |
| | | | | | | |

Total Section 1 _____

_____
Bidder

**Palm Station to Norman Avenue Junction 60kV Transmission**
**Construction Units**
Section 2 – INSULATOR ASSEMBLY UNITS

An insulator assembly unit consists of the insulator and all necessary hardware, crossarms, and material needed to attach the insulator to a pole unit. The unit price shall include receiving, unloading, sorting, storing, distribution to structure sites, and installation per contract drawings and specifications. Pole, Conductor, Anchor, and Guy Assembly Units are not included as a part of this bid unit.

Payment for insulator units will be on a unit price basis. The unit price payment shall include all costs and expenses to provide in place insulator units, as described in the contract drawings and specifications.

| Unit | Number of Units | Unit Price | | | | Total |
|---|---|---|---|---|---|---|
| | | Labor | Materials | | L & M | |
| | | | Owner | Contractor | | |
| Insulator, Post Type, Horizontal, Single Trunnion, Porcelain C043621-1 | 0 | | N/A | | | |
| Insulator, Post Type, Horizontal, Double Trunnion, Porcelain OH 750-6 | 69 | | N/A | | | |
| Insulator, Suspension, 60kV, non-ceramic OH 750-5,6,7 | 27 | | N/A | | | |
| | | | | | | |

Total Section 2 _____

_____
Bidder

**Palm Station to Norman Avenue Junction 60kV Transmission**
**Construction Units**
Section 3 – CONDUCTOR ASSEMBLY UNITS

A conductor assembly unit consists of 1000 linear feet of a single overhead conductor and includes all necessary sleeves for splicing, armor rod or line guards, and other material needed to attach the conductor to an insulator unit. The length of conductor shall be determined by taking the sum of all straight, horizontal span distances from center to center of the poles carrying the conductor. The unit price shall include receiving, unloading, sorting, storing, distribution to structure sites, and installation of the conductor per contract drawings and specifications. The Contractor shall be responsible for all costs related to conductor reel disposal. Pole, Insulator, Anchor, and Guy Assembly Units are not included as a part of this bid unit.

Payment for conductor units will be on a unit price basis. The unit price payment shall include all costs and expenses to provide in place conductor units, as described in the contract drawings and specifications.

| Unit | Number of Units | Unit Price | | | | Total |
|---|---|---|---|---|---|---|
| | | Labor | Materials | | L & M | |
| | | | Owner | Contractor | | |
| 715 kcmil ACCR "Stilt" | 21.0 | | N/A | | | |
| Clamp, Trunnion, Single 715 ACCR "Stilt" with armor rod | 138 | | N/A | | | |
| Suspension Assembly Thermolign, 715 ACCR "Stilt" | 0 | | | | | |
| Deadend, Compression – 715 ACCR "Stilt" | 72 | | N/A | | | |
| Yoke Assembly, Strain, with Socket Clevis and two Ball Clevises – | 0 | | N/A | | | |
| | | | | | | |

Total Section 3 _____

_____
Bidder

**Palm Station to Norman Avenue Junction 60kV Transmission**
**Construction Units**
Section 4 – ANCHOR ASSEMBLY UNITS

An anchor assembly unit consists of the installation of an anchor with rod and includes all hardware needed to attach the anchor unit to a guy assembly unit. The unit price shall include receiving, unloading, sorting, storing, distribution to structure sites, and installation of the anchor per contract drawings and specifications. Pole, Insulator, Conductor, and Guy Assembly Units are not included as a part of this bid unit.

Payment for anchor units will be on a unit price basis. The unit price payment shall include all costs and expenses to provide in place anchor units, as described in the contract drawings and specifications.

| Unit | Number of Units | Unit Price | | | | Total |
|---|---|---|---|---|---|---|
| | | Labor | Materials | | L & M | |
| | | | Owner | Contractor | | |
| Guy Anchor, Screw, Double, 10", 1-1/2" hub with 1" diameter x 7' triple-eye rod. SVP Bin 83173 | 0 | | N/A | | | |
| | | | | | | |
| | | | | | | |
| | | | | | | |
| | | | | | | |

Total Section 4 _____

_____
Bidder

**Palm Station to Norman Avenue Junction 60kV Transmission**
**Construction Units**
Section 5 – GUY ASSEMBLY UNITS

A guy assembly unit consists of the installation of guy wire for pole to pole guys, or pole to ground guys. It includes all hardware, strain insulators, and protectors needed to attach the guy assembly unit to a pole unit and a pole, or anchor, unit. The unit price shall include receiving, unloading, sorting, storing, distribution to structure sites, and installation of the anchor per contract drawings and specifications. Pole, Insulator, Conductor, and Anchor Assembly Units are not included as a part of this bid unit.

Payment for guy assembly units will be on a unit price basis. The unit price payment shall include all costs and expenses to provide in place guy assembly units, as described in the contract drawings and specifications.

| Unit | Number of Units | Unit Price | | | | Total |
|---|---|---|---|---|---|---|
| | | Labor | Materials | | L & M | |
| | | | Owner | Contractor | | |
| 1/4" Down Guy | 0 | | N/A | | | |
| 3/8" Down Guy | 0 | | N/A | | | |
| 7/16" Down Guy | 0 | | N/A | | | |
| | | | | | | |
| | | | | | | |

Total Section 5 _____

_____
Bidder

**Palm Station to Norman Avenue Junction 60kV Transmission**
**Construction Units**
Section 6 – LINE TERMINATION UNITS

A line termination unit consists of the furnishing of labor and equipment needed for disassembling the existing line termination system (2-954 kcmil AAC conductors) and installing the new line termination system for 2-1113 kcmil AAC conductors at both Kifer Receiving Station and Fiberglas. It includes all hardware needed to attach the new 2-1113 kcmil AAC conductors to the bus termination or disconnect switch terminal.

Payment for line termination units will be on a unit price basis. The unit price payment shall include all costs and expenses associated with line termination units, as described in the contract drawings and specifications.

| Unit | Number of Units | Unit Price | | | | Total |
|---|---|---|---|---|---|---|
| | | Labor | Materials | | L & M | |
| | | | Owner | Contractor | | |
| At Palm Station | | | | | | |
| Bolted 2-715 kcmil ACCR Conductors to 4-Hole NEMA Pad 45 Degrees (minimum 2000 amp capacity) | 3 | | N/A | | | |
| | | | | | | |
| At NAJ | | | | | | |
| Bolted 2-715 kcmil ACCR to 4-Hole NEMA Pad (minimum 2000 amp capacity) | 3 | | N/A | | | |
| | | | | | | |

Total Section 6 _____

_____
BIDDER

**Palm Station to Norman Avenue Junction 60kV Transmission**
**Construction Units**
Section 7 – REMOVAL UNITS

A removal unit consists of the furnishing of labor and equipment needed for disassembling the existing transmission system. Removal of the structures will include dismantling and transporting or transferring the following from the project job site(s).

1. Poles
2. Insulator Assemblies
3. Conductors
4. Anchors
5. Guy Assemblies
6. Metal Tower Structures

The removed materials will become the property of the Contractor and shall be removed from the worksite on a daily basis.

Payment for removal units will be on a unit price basis. The unit price payment shall include all costs and expenses associated with removal units, as described in the contract drawings and specifications.

| Unit | Number of Units | Unit Price | | | | Total |
|---|---|---|---|---|---|---|
| | | Labor | Materials | | L & M | |
| | | | Owner | Contractor | | |
| Wood Pole, 65' Cl. 2 | 0 | | N/A | | | |
| 60kV Post Type Insulator | 0 | | N/A | | | |
| 3/8" Down Guy | 0 | | N/A | | | |
| | | | | | | |

Total Section 7 _____

_____
Bidder

**Palm Station to Norman Avenue Junction 60kV Transmission**
**Construction Units**
Line Proposal Summary

| | |
|---|---|
| Section 1 – Pole Units | _____ |
| Section 2 – Insulator Assembly Units | _____ |
| Section 3 – Conductor Assembly Units | _____ |
| Section 4 – Anchor Assembly Units | _____ |
| Section 5 – Guy Assembly Units | _____ |
| Section 6 – Line Termination Units | _____ |
| Section 7 – Removal Units | _____ |
| Total Exhibit C Construction Costs | _____ |

_____
Bidder

END OF EXHIBIT C

THIS PAGE

INTENTIONALLY

LEFT BLANK

# DOCUMENT 00411

## BOND ACCOMPANYING BID

| A | To be submitted as part of Envelope "A" by the time and date specified in Document 00200 (Instructions to Bidders), paragraph 1. |
|---|---|

KNOW ALL BY THESE PRESENTS:

That the undersigned as Principal and the undersigned as Surety are held and firmly bound unto the CITY OF SANTA CLARA, a chartered Municipal Corporation of the State of California ("City"), as obligee, in the penal sum of _____ Dollars ($_____) lawful money of the United States of America being at least ten percent (10%) of the aggregate amount of said Principal's base Bid, for the payment of which, well and truly to be made, we bind ourselves, our successors, executors, administrators, and assigns, jointly and severally, firmly by these presents.

WHEREAS, the said Principal is submitting a Bid for City Contract Number 2375B, THE PALM SUBSTATION 60kV EXTENSION PROJECT.

THE CONDITION OF THIS OBLIGATION IS SUCH that if the Bid submitted by the said Principal be accepted and the Contract be awarded to said Principal and said Principal shall within the required periods enter into the Contract so awarded and provide the required Construction Performance Bond, Construction Labor and Material Payment Bond, insurance certificates, and all other endorsements, forms, and documents required under Document 00200 (Instructions to Bidders), then this obligation shall be void, otherwise to remain in full force and effect.

IN WITNESS WHEREOF, the above bounden parties have executed this instrument this _____ day of _____, 200____.

**CONTRACTOR AS PRINCIPAL:**

Name: _____

Principal Place of Business:

Address: _____

City/State/Zip: _____

Signature: _____

Name: _____

Title: _____

**SURETY:**

Name: _____

Principal Place of Business:

Address: _____

City/State/Zip: _____

Signature: _____

Name: _____

Title: _____

(Please Note: Surety Signature must be notarized)

Please Apply Corporate Seal Here

Please Apply Corporate Seal Here)

Approved as to Form:

_____ Date: _____

City Attorney

END OF DOCUMENT

# DOCUMENT 00420

# BIDDER REGISTRATION FORM

| A | To be submitted as part of Envelope "A" by the time and date specified in Document 00200 (Instructions to Bidders), paragraph 1. |
|---|---|

IN ORDER TO REGISTER TO UNDERTAKE WORK FOR THE CITY OF SANTA CLARA, ACTING BY AND THROUGH ITS CITY COUNCIL, YOU MUST FILL OUT THIS FORM COMPLETELY, DO NOT LEAVE ANY BLANKS.

1.01 BIDDER'S CORPORATE NAME, ADDRESS, AND PHONE NUMBERS

Bidder's Company Name: _____

State where incorporated: _____

Contractor's License _____ _____ _____
License Number License Date Federal ID Number

Main Office Location _____
_____
_____ _____ _____
City State Zip

Mailing Address _____
_____
_____ _____ _____
City State Zip

Phone _____ Fax _____

Type Business
- ☐ Sole Proprietor
- ☐ Partnership
- ☐ Non-Profit 501 C3
- ☐ Corporation
- ☐ Other (Please Explain) _____
_____

1.02 BIDDER'S CONTACT INFORMATION: The following contact information will be used for sending all notices after bid opening.

Contact Name: _____

Title: _____

Address: _____
_____
_____ _____ _____
City State Zip

Phone _____ Fax _____

e-mail _____

1.03 PRINCIPALS INTERESTED IN THIS BID: The following sheet may be duplicated as necessary in order to list all principals interested in this bid.

Principal
Name: _____
Title: _____
Address: _____
_____
_____ _____ _____
City State Zip
Phone No. _____ Fax No. _____

Principal
Name: _____
Title: _____
Address: _____
_____
_____ _____ _____
City State Zip
Phone No. _____ Fax No. _____

Principal
Name: _____
Title: _____
Address: _____
_____
_____ _____ _____
City State Zip
Phone No. _____ Fax No.r _____

Principal
Name: _____
Title: _____
Address: _____
_____
_____ _____ _____
City State Zip
Phone No _____ Fax No. _____

Bidder: _____
Company Name

By: _____
Signature

Name: _____

Title: _____

Address: _____

_____

_____ _____ _____
City State Zip

Phone Number _____ Fax Number _____

NOTE: If the Bidder is a corporation, set forth the legal name of the corporation together with the signature of the officer or officers authorized to sign contracts on behalf of the corporation. If the Bidder is a partnership, set forth the name of the firm together with the signature of the partner or partners authorized to sign contracts on behalf of the partnership. All signer(s) represent and warrant that they are authorized to sign this Bid on behalf of Bidder.

END OF DOCUMENT

THIS PAGE

INTENTIONALLY

LEFT BLANK

# DOCUMENT 00421

# DECLARATION OF CONTRACTOR'S LICENSE STATUS[1]

| A | To be submitted as part of Envelope "A" by the time and date specified in Document 00200 (Instructions to Bidders), paragraph 1. |
|---|---|

I, _____, declare under penalty of perjury under the laws of the State of California that the following is true and correct:

1. The State Contractor's license number for the signatory Contractor is: _____.
2. The license expiration date is: _____.

Executed at on _____, 200___ at _____, California.

**CONTRACTOR**

_____

[Contractor's Firm Name – Print or Type]

_____

[Signatory's Name – Print or Type]

_____

[Signature]

_____

[Capacity/Title in Contracting Firm – Print or Type]

END OF DOCUMENT

[1] California Business & Professions Code § 7028.15.

THIS PAGE

INTENTIONALLY

LEFT BLANK

# DOCUMENT 00430

# SUBCONTRACTORS AND SUBCONSULTANTS LIST FORM

| A | To be submitted as part of Envelope "A" by the time and date specified in Document 00200 (Instructions to Bidders), paragraph 1. |
|---|---|

Use this Document 00430 (Subcontractors and Sub-consultants List Form) for Subcontractors on Base Bid Work required to be listed by Law, and for all Design Sub-consultants.

Sub-consultant or Subcontractor _____

Address: _____

_____

_____ _____ _____

City State Zip

Phone Number _____ License Number _____

Type of Work _____

_____

_____

_____

Value of Work as a percentage of the Bid Amount _____

Sub-consultant or Subcontractor _____

Address: _____

_____

_____ _____ _____

City State Zip

Phone Number _____ License Number _____

Type of Work _____

_____

_____

_____

Value of Work as a percentage of the Bid Amount _____

Sub-consultant or Subcontractor _____

Address: _____

_____

_____ _____ _____
City State Zip

Phone Number _____ License Number _____

Type of Work _____

_____

_____

_____

Value of Work as a percentage of the Bid Amount _____

Sub-consultant or Subcontractor _____

Address: _____

_____

_____ _____ _____
City State Zip

Phone Number _____ License Number _____

Type of Work _____

_____

_____

_____

Value of Work as a percentage of the Bid Amount _____

//

//

This sheet may be duplicated and reused as many times as necessary to completely list all subcontractors and sub-consultants.

Bidder: _____
Company Name

By: _____
Signature

Name: _____

Title: _____

Address: _____

_____

_____ _____ _____
City State Zip

Phone Number _____ Fax Number _____

NOTE: If the Bidder is a corporation, set forth the legal name of the corporation together with the signature of the officer or officers authorized to sign contracts on behalf of the corporation. If the Bidder is a partnership, set forth the name of the firm together with the signature of the partner or partners authorized to sign contracts on behalf of the partnership. All signer(s) represent and

END OF DOCUMENT

THIS PAGE

INTENTIONALLY

LEFT BLANK

# DOCUMENT 00440

# AFFIDAVIT OF COMPLIANCE WITH ETHICAL STANDARDS

# CITY OF SANTA CLARA

| | |
|---|---|
| A | To be submitted as part of Envelope "A" by the time and date specified in Document 00200 (Instructions to Bidders), paragraph 1. |

I, _____, being first duly sworn, depose and say to the City of Santa Clara ("City") that:

1. I am _____ *[insert title or capacity]* of _____ *[insert entity name]* ("Bidder").

2. I hereby state that I have read and understand the attached Document 00441 Ethical Standards for Contractors. I have examined appropriate business records, and I have made inquiry of those individuals potentially included within the definition of "Contractor" contained in Document 00441. I have authority to make these representations on my own behalf and on behalf of the legal entity herein identified.

3. Neither (a) Bidder nor (b) any individual(s) belonging to a category identified in footnote No. 1 of Document 00441 has been convicted of any one or more of the crimes identified in Document 00441 within the past five (5) years.

4. Notwithstanding award of any contract by City or performance thereunder, the City shall have all rights and remedies described in Document 00441.

The above assertions are true and correct and are made under penalty of perjury under the laws of the State of California.

_____
Corporation, Partnership, etc.

_____
Signature

_____
Title

Note: Written evidence of the authority of the person executing this affidavit on behalf of a corporation, partnership, joint venture, or any other legal entity, other than a sole proprietorship, shall be attached.

STATE OF CALIFORNIA)

County of _____)

On _____, 200__, before me _____

_____ (here insert name and title of officer) a Notary Public in

and for the State of California, personally appeared _____, personally known to me (or proved to me on the basis of satisfactory evidence) to be the person(s) whose name(s) is/are subscribed to the within instrument and acknowledged to me that he/she/they executed the same in his/her/their authorized capacity (ies), and that by his/her/their signature(s) on the instrument the person(s), or the entity upon behalf of which the person(s) acted, executed the instrument.

WITNESS my hand and official seal.

Signature _____ (Seal)

END OF DOCUMENT

# DOCUMENT 00441

# ETHICAL STANDARDS FOR CONTRACTORS

Termination of Contract for Certain Acts.

A. City may, at its sole discretion, terminate any contract with Contractor if any one or more of the following occurs:

1. If Contractor[1] does any of the following:

   a. Is convicted[2] of operating a business in violation of any Federal, State or local law or regulation;

   b. Is convicted of a crime punishable as a felony involving dishonesty;[3]

   c. Is convicted of an offense involving dishonesty or is convicted of fraud or a criminal offense in connection with: (1) obtaining; (2) attempting to obtain; or (3) performing a public contract or subcontract;

   d. Is convicted of any offense which indicates a lack of business integrity or business honesty which seriously and directly affects the present responsibility of a City contractor or subcontractor; or

   e. Made (or makes) any false statement(s) or representation(s) with respect to the contract; or

2. If fraudulent, criminal, or other seriously improper conduct of any officer, director, shareholder, partner, employee, or other individual associated with Contractor can be imputed to Contractor when the conduct occurred in connection with the individual's performance of duties for or on behalf of Contractor, with Contractor's knowledge, approval or acquiescence, Contractor's acceptance of the benefits derived from the conduct shall be evidence of such knowledge, approval, or acquiescence.

B. City may also terminate any contract with Contractor if any one or more of the following occurs:

1. If Contractor becomes "insolvent";[4]

---

[1] For purposes of this Document 00441, the term "Contractor" (whether a person or a legal entity) means any of the following: an owner or co-owner of a sole proprietorship; a person who controls or who has the power to control a business entity; a general partner of a partnership; a principal in a joint venture; or a person who owns more than ten percent (10%) of the outstanding stock of a corporation and who is active in the day to day operations of that corporation.

[2] For purposes of this Document 00441, the terms "convicted" or "conviction" mean a judgment or conviction of a criminal offense by any court of competent jurisdiction, whether entered upon a verdict or a plea, and includes a conviction entered upon a plea of nolo contendere within the past five (5) years.

[3] For purposes of this Document 00441, the term "dishonesty" includes, without limitation, embezzlement, theft, forgery, bribery, falsification or destruction of records, making false statements, failure to pay tax obligations, receiving stolen property, collusion or conspiracy.

2. If City determines that Contractor no longer has the financial capability or business experience (including without limitation loss of personnel deemed essential by City) to perform successfully the terms of, or operate under, any contract with City; or

3. If City determines that Contractor fails to submit information, or submits false information, which is required to perform or be awarded a contract with City, including, but not limited to, Contractor's failure to maintain a required state issued license, failure to obtain a City business license (if applicable), or failure to purchase and maintain bonds and/or insurance policies required under any contract with City.

C. In the event a prospective Contractor (or bidder) is ruled ineligible (debarred) to participate in a contract award process, or a contract is terminated pursuant to the these provisions, Contractor may appeal City's action to the City Council by filing a written request with the City Clerk to have the matter heard within ten (10) days of the notice given by City. The matter will be heard within thirty (30) days of the filing of the appeal request with the City Clerk. Contractor shall have the burden of proof on the appeal. Contractor shall have the opportunity to present evidence, both oral and documentary, and argument.

END OF DOCUMENT

---

[4] For purposes of this Document 00441, Contractor is "insolvent" if it is unable to pay its debts as they become due, transfers assets in fraud of creditors, makes an assignment for the benefit of creditors, files a petition under any section or chapter of the federal Bankruptcy Code (11 U.S.C.), as amended, or under any similar law or statute of the United States or any state thereof, is adjudged bankrupt or insolvent in proceedings under such laws, or a receiver or trustee is appointed for all or substantially all of Contractor's assets.

# DOCUMENT 00450

# STATEMENT OF QUALIFICATIONS FOR CONSTRUCTION WORK

| | |
|---|---|
| B | To be submitted as part of Envelope "B" by the time and date specified in Document 00200 (Instructions to Bidders), paragraph 1. |

## 1. GENERAL INFORMATION

A. In Document 00100 (Advertisement for Bids) the City of Santa Clara, a Municipal Corporation of the State of California ("City"), has indicated that it will receive sealed Bids for the Contract for the construction of the PALM SUBSTATION 60kV EXTENSION PROJECT. The Contract will require Contractor to construct the Project, all in accordance with the scope of Work set forth in the Contract.

1. City will accept Bids only from Bidders duly licensed in accordance with the California Business & Professions Code. Additionally, Bidder must meet the following requirements, at a minimum, in order to be considered by City to be qualified for award of the Contract:

   a. Three (3) years experience as a continuously operating entity engaged in the performance of similar work.

   b. Within the past five (5) years completed three (3) construction projects of a similar nature and complexity with a contract dollar amount of at least $2.5 million each.

   c. Evidence of a valid California "A and C10" contractor's license for the Bidder and evidence of requisite licenses for Key Personnel of Bidder or any designated Subcontractor(s).

2. Bidder's compliance with the minimum qualification requirements in paragraph I.A.1 of this Document 00450 will also be measured by the experience of the supervisory personnel who will have responsible charge of the various major components of the Work.

   a. If Bidder subcontracts portions of the Work, City, in its determination of whether the minimum qualification requirements have been met, will consider the qualifications of the Subcontractor's supervisory personnel.

   b. The qualifications of the Key Personnel are to be submitted with the SOQ, by providing the information described in paragraph 2.G of this Document 00450.

## 2. REQUIRED CONTENTS OF SOQ SUBMISSION

A. Transmittal Letter. The Transmittal Letter shall name the proposed prime contractor, its legal structure (i.e., corporation, partnership, limited partnership, joint venture), and all of the Subcontractors to be used on the Project, and the roles and responsibilities proposed for each firm. If a joint venture or partnership is proposed, Bidder shall identify each partner and/or member of the joint venture and their roles and responsibilities.

B. Financial Capacity. Include audited or reviewed financial statements for the three most recently completed fiscal years for Bidder and each member of any proposed consortium or joint venture. Also include audited or reviewed financial statements for the three most recently completed fiscal years for any parent company(ies) of Bidder and each member of any proposed consortium or joint venture.

C. Capability to Provide Required Performance and Payment Bonds. Bidder shall include a letter from a surety duly licensed to do business in the State of California, having a financial rating from A. M. Best Company of **[A-7]** or better that the surety has agreed to provide Bidder with the required performance and payment bonds in accordance with the requirements set forth in Documents 00610 (Construction Performance Bond) and 00620 (Construction Labor and Material Payment Bond). Such performance and payment bonds shall be in the minimum penal sums provided therein. Bidder shall include authorization that gives the City the right to verify with the surety that the surety, based upon the Bid prices, will issue the required bonds under the conditions stated.

D. Capability to Provide the Required Insurance. Bidder shall provide a letter from an insurance underwriter(s), having a financial rating from A. M. Best Company of **[A-7]** or better, confirming that the insurer will provide Bidder the required coverages and amounts specified in Document 00700 (General Conditions).

E. Human and Physical Resources. Bidder shall identify, describe, and quantify for itself and separately for its "designated Subcontractor(s)" (as defined in Document 00200 Instructions to Bidders), the following technical resources for the construction work:

1. Description and location of manufacturing facilities, naming products and quantifying production capacity and current demand;
2. Description of field organization(s), naming skills and equipment;
3. Description of safety program, quality control procedures, and safety experience; and
4. Evidence of a valid California "A and C10" contractor's license and required licenses of all licensees of persons who are Key Personnel of the Bidder or any designated Subcontractor(s).

F. Completed Questionnaire. Bidder shall include a completed "Statement of Qualification Questionnaire" in the form attached to this Document 00450 as Attachment "A." Bidder shall make sure its answers to the Questionnaire describe for itself, its Key Personnel proposed, and its designated Subcontractor(s), their public works construction projects of a value of at least $1 million each. Add supplementary information if necessary.

G. Resumes of Proposed Key Personnel. Bidder shall provide a resume for each named Key Personnel of Bidder, and Bidder's (including but not limited to the superintendent) designated Subcontractor(s), to include the following:

1. Name and proposed assignment of Key Personnel; do not include home addresses or phone numbers
2. Years of experience;
3. Education - degrees, schools and years obtained;

4. Professional registration(s);
5. Fluency in English (Yes/No);
6. Experience directly related to above proposed assignment;
7. At least two client references, including contact names, addresses and telephone numbers; and
8. Description of projects of a similar nature worked on in the past five years.

H. Litigation History. Description of litigation history for the past three years, including names of involved parties, nature of dispute, and disposition.

## 3. GENERAL CONDITIONS

A. General Conditions for Content. The SOQ shall be clear and concise to enable management-oriented personnel to make a thorough evaluation and arrive at a sound determination as to whether the SOQ meets City's requirements. To this end, the SOQ should be so specific, detailed and complete as to demonstrate clearly and fully that the Bidder has a thorough understanding of and has demonstrated knowledge of the requirements to perform the Work (or applicable portion thereof).

B. Explanations to SOQ. Any explanation requested by a Bidder regarding the meaning or interpretation of this Document 00450 must be requested in writing and with sufficient time allowed for a reply to reach Bidder before the submission of its SOQ. Oral explanations or instructions will not be binding. Any information provided to any prospective Bidder concerning this Document 00450 will be furnished to all prospective Bidders as an Addendum to the Bidding Documents.

C. Definitions. Except as set forth herein, all abbreviations and definitions of terms used in this Document 00450 are as set forth in Document 00700 (General Conditions) or Section 01420 (References and Definitions).

***STATEMENT OF QUALIFICATION QUESTIONNAIRE FOLLOWS ON NEXT PAGE***

## ATTACHMENT "A"

### Statement of Qualification Questionnaire

Bidders shall complete the entire Statement of Qualification Questionnaire and submit it in accordance with Document 00200 (Instructions to Bidders) and Document 00450 Statement of Qualifications). Failure to complete the questionnaire or inclusion of any false statement(s) shall be grounds for immediate disqualification.

### CONTACT INFORMATION

Company Name: _____

Owner of Company: _____

Contact Person: _____

Address: _____

Phone: _____ Fax: _____

### PART A: GENERAL INFORMATION

Complete Part A before proceeding to Part B.

1. Does Bidder possess a valid and current California Contractor's license for the work proposed? Yes _____ No _____
2. Does Bidder have a minimum of $1,000,000 liability insurance coverage? Yes _____ No _____
3. Has Bidder's license been revoked at any time in the last five (5) years? Yes _____ No _____
4. Has Bidder been "default terminated" by an owner (other than for convenience), or has a Surety completed a contract for Bidder within the last five (5) years? Yes _____ No _____
5. Has Bidder been cited more than twice for failure to pay prevailing wages in the last five (5) years? Yes _____ No _____
6. Has Bidder attached copies of its reviewed or audited financial statements and accompanying notes for the latest three (3) years? Yes _____ No _____

**Bidder will be immediately disqualified if any answer to questions 1, 2 or 6 is No.**

**Bidder will be immediately disqualified if any answer to questions 3, 4 or 5 is Yes.**

## PART B: SAFETY, PREVAILING WAGE, DISPUTES AND BONDS

**(SAFETY)**

1. Has Cal/OSHA, Federal OSHA, the EPA or any Air Quality Management District cited Bidder in the past five (5) years? Yes _____ No _____ If yes, attach description of each citation.
2. How often does Bidder require documented safety meetings be held for:

| | | | | |
|---|---|---|---|---|
| Field Supervisor | Weekly ___ | Bi-weekly ___ | Monthly ___ | Less than monthly ___ |
| Employees | Weekly ___ | Bi-weekly ___ | Monthly ___ | Less than monthly ___ |
| New Hires | Weekly ___ | Bi-weekly ___ | Monthly ___ | Less than monthly ___ |
| Subcontractors | Weekly ___ | Bi-weekly ___ | Monthly ___ | Less than monthly ___ |

3. How often does Bidder conduct documented safety inspections?

   Quarterly _____ Semi-annually _____ Annually _____ Other _____
4. Does Bidder have home office safety representatives who visit/audit the job site?

   Quarterly _____ Semi-annually _____ Annually _____ Other _____
5. What is Bidder's Interstate Experience Modification Rate? _____. (A rating in excess of one (1) will constitute grounds for disqualification as non-responsible.)

**(PREVAILING WAGE PROVISIONS)**

6. Has Bidder been fined, penalized or otherwise found to have violated any prevailing wage or labor code provision? If yes, attach description of each occurrence. Yes_____ No_____

**(LICENSE PROVISIONS)**

7. Has Bidder changed names or license numbers in the past 10 years? If so, please state reason for change.

   Yes_____ No_____

   Reason: _____

   _____

**(DISPUTES)**

8. Has Bidder had any claims, litigation, or disputes ending in mediation or arbitration, or termination for cause associated with any project in the past 10 years? If yes, attach description of each such instance including details of total claim amount, settlement amount, and owner's name and phone number. Yes _____ No _____

**(BONDING)**

9. Bonding Capacity - Provide documentation from Bidder's surety identifying the following:

Name of bonding company/surety: _____

Name of Surety Agent: _____

Surety Agent address: _____

Surety Agent phone number: _____

Is surety a California-admitted surety? Yes _____ No _____

Is surety listed in the current edition of the California Department of the Treasury's Listing of approved sureties? Yes _____ No _____

List surety's A.M. Best Rating: _____

What is Bidder's total bonding capacity? _____

What percentage rate does Bidder pay for bonds? _____

**PART C: EXPERIENCE OF PRIME CONTRACTOR**

The unique nature of this Project requires prior similar experience of the firm and the Key Personnel assigned. Summarize similar project experience below and provide the detailed project information requested:

**Prime Contractor**. List three (3) projects with a construction cost of at least $2,500,000 each completed in the past five (5) years and indicate who were the superintendent and scheduler.

| Project Name | Construction Cost ($) | Year complete | Name of Project Superintendent | Name of Project Scheduler |
|---|---|---|---|---|
| | | | | |
| | | | | |
| | | | | |

List Key Personnel that will be assigned to the Work:

Project Manager: _____

Project Superintendent: _____

**Recent Projects.**

Bidder shall provide information about three (3) of its most recently completed projects. Names and references must be current and verifiable. If a separate sheet is used, it must contain all of the following information:

1. Project Name: _____

Location: _____

Owner: _____

Owner Contact (name and phone number): _____

Architect/Engineer: _____

Architect/Engineer Contact (name and phone number): _____

Const. Mgr. or Project Mgr. (name and phone number): _____

Description of Project, Scope of Work Performed: _____

_____

_____

_____

_____

_____

_____

_____

_____

_____

Total Construction Cost: _____

Total Change Order Amount: _____

Original Scheduled Date of Completion: ___

Time Extensions Granted (number of Days): _____

Actual Date of Completion: _____

Number of Stop Notices filed by subcontractors or suppliers: _____

2. Project Name: _____

Location: _____

Owner: _____

Owner Contact (name and phone number): _____

Architect/Engineer: _____

Architect/Engineer Contact (name and phone number): _____

Const. Mgr. or Project Mgr. (name and phone number): _____

Description of Project, Scope of Work Performed: _____

_____

_____

_____

_____

_____

_____

_____

_____

_____

_____

_____

_____

Total Construction Cost: _____

Total Change Order Amount: _____

Original Scheduled Date of Completion: ___

Time Extensions Granted (number of Days): _____

Actual Date of Completion: _____

Number of Stop Notices filed by subcontractors or suppliers: _____

3. Project Name: _____

Location: _____

Owner: _____

Owner Contact (name and phone number): _____

Architect/Engineer: _____

Architect/Engineer Contact (name and phone number): _____

Const. Mgr. or Project Mgr. (name and phone number): _____

Description of Project, Scope of Work Performed: _____

_____

_____

_____

_____

_____

_____

_____

_____

_____

_____

_____

_____

Total Construction Cost: _____

Total Change Order Amount: _____

Original Scheduled Date of Completion: ___

Time Extensions Granted (number of Days): _____

Actual Date of Completion: _____

Number of Stop Notices filed by subcontractors or suppliers: _____

## PART D: EXPERIENCE OF DESIGNATED SUBCONTRACTOR(S)

The unique nature of this Project requires prior similar project experience of the designated Subcontractor(s) and the Key Personnel assigned. Summarize similar project experience below and provide the detailed project information requested for each of the designated Subcontractor(s). Also expressly indicate which, if any, of the designated Subcontractor(s)' functions Bidder will perform itself:

**Electrical Subcontractor:** List three (3) similar projects completed in the past five (5) years and indicate who were the superintendent and scheduler.

| Project name | Construction Cost ($) | Year completed | Name of Project Superintendent | Name of Project Scheduler |
|---|---|---|---|---|
| | | | | |
| | | | | |
| | | | | |

List Key Personnel that will be assigned to the Work:

Project Manager: _____

Project Superintendent: _____

**Earthwork Subcontractor:** List three (3) similar projects completed in the past five (5) years and indicate who were the superintendent and scheduler.

| Project name | Construction Cost ($) | Year completed | Name of Project Superintendent | Name of Project Scheduler |
|---|---|---|---|---|
| | | | | |
| | | | | |
| | | | | |

Project Manager: _____

Project Superintendent: _____

**Structural/Concrete Subcontractor:** List three (3) similar typed projects completed in the past five (5) years and indicate who were the superintendent and scheduler.

| Project name | Construction Cost ($) | Year completed | Name of Project Superintendent | Name of Project Scheduler |
|---|---|---|---|---|
| | | | | |
| | | | | |
| | | | | |

List Key Personnel that will be assigned to the Work:

Project Manager: _____

Project Superintendent: _____

**Recent Projects.**

Provide information about three (3) most recently completed projects for each of the designated Subcontractor(s). Names and references must be current and verifiable. Use additional sheets if necessary. If separate sheets are used, they must contain all of the following information for each of the designated Subcontractor(s):

1. Project Name: _____

   Location: _____

   Owner: _____

   Owner Contact (name and phone number): _____

   Architect/Engineer: _____

   Architect/Engineer Contact (name and phone number): _____

   Prime Contractor: _____

   Prime Contractor Contact (name and phone number): _____

   Const. Mgr. or Project Mgr. (name and phone number): _____

   Description of Project, Scope of Work Performed: _____

   _____

   Value of Construction Contract: _____

   Value of Change Orders: _____

   Original Scheduled Date of Completion: _____

Time Extensions Granted (number of Days):_____

Actual Date of Completion:_____

Number of Stop Notices filed by subcontractors or suppliers:_____

2. Project Name: _____

Location:_____

Owner:_____

Owner Contact (name and phone number):_____

Architect/Engineer:_____

Architect/Engineer Contact (name and phone number):_____

Const. Mgr. or Project Mgr. (name and phone number):_____

Prime Contractor:_____

Prime Contractor Contact (name and phone number):_____

Description of Project, Scope of Work Performed:_____

_____

Value of Construction Contract:_____

Value of Change Orders:_____

Original Scheduled Date of Completion:_____

Time Extensions Granted (number of Days):_____

Actual Date of Completion:_____

Number of Stop Notices filed by subcontractors or suppliers:_____

3. Project Name: _____

Location:_____

Owner:_____

Owner Contact (name and phone number):_____

Architect/Engineer:_____

Architect/Engineer Contact (name and phone number):_____

Prime Contractor:_____

Prime Contractor Contact (name and phone number):_____

Const. Mgr. or Project Mgr. (name and phone number):_____

Description of Project, Scope of Work Performed:_____

_____

Value of Construction Contract:_____

Value of Change Orders:_____

Original Scheduled Date of Completion:_____

Time Extensions Granted (number of Days):_____

Actual Date of Completion:_____

Number of Stop Notices filed by subcontractors or suppliers:_____

**PART E: FINANCIAL INFORMATION**

1. Has Bidder ever reorganized under the protection of the bankruptcy laws?

   Yes____ No _____ If yes, please state when _____

2. If Bidder has had the general liability carrier identified in Document 00420 (Bidder Registration and Safety Experience Form) for less than 5 years, please provide additional information below for balance of the past 5 years

   Agency Name: _____

   Contact Name: _____

   Phone Number: _____

   Carrier: _____ A.M. Best Rating _____

   Carrier: _____ A.M. Best Rating _____

   Carrier: _____ A.M. Best Rating _____

3. Has Bidder ever had insurance terminated by a carrier? Yes _____ No _____

   If yes, explain on separate signed sheet marked with correlating cross-reference to this paragraph of the questionnaire.

Bidder hereby declares under penalty of perjury that all the information provided in this questionnaire is true and correct.

_____

SIGNATURE

_____

TITLE

END OF DOCUMENT

# DOCUMENT 00460

# SCHEDULE OF MAJOR EQUIPMENT AND MATERIAL SUPPLIERS

| | |
|---|---|
| A | To be submitted as part of Envelope "A" by the time and date specified in Document 00200 (Instructions to Bidders), paragraph 1. |

The undersigned Bidder represents that, if awarded the Contract, the items of major equipment and materials specified below will be supplied by the manufacturers or suppliers specified below. By so indicating, bidder warrants that the equipment and materials manufacturer and/or supplied by the named manufacturer or supplier will be provided on the Project unless review of submittal information or performance under tests reveals that the equipment or material does not meet Contract requirements. Failure to indicate a manufacturer or supplier listed in the following schedule may render the Bid non-responsive and may be the basis for rejection of the Bid.

| Item | Manufacturer or Supplier |
|---|---|
| 1. [_____] | _____ |
| 2. [_____] | _____ |
| 3. [_____] | _____ |
| 4. [_____] | _____ |
| 5. [_____] | _____ |
| 6. [_____] | _____ |

Bidder: _____

_____

SIGNATURE

_____

DATE

END OF DOCUMENT

THIS PAGE

INTENTIONALLY

LEFT BLANK

# DOCUMENT 00481
# NON-COLLUSION AFFIDAVIT

| | |
|---|---|
| A | To be submitted as part of Envelope "A" by the time and date specified in Document 00200 (Instructions to Bidders), paragraph 1. |

PUBLIC CONTRACT CODE §7106

NON-COLLUSION AFFIDAVIT TO BE EXECUTED BY BIDDER AND SUBMITTED WITH BID

STATE OF CALIFORNIA )
) ss.
COUNTY OF SANTA CLARA )

_____, being first duly sworn, deposes and says that he or she is _____ [Office of Affiant] of _____ [Name of Bidder], the party making the foregoing Bid, that the Bid is not made in the interest of, or on behalf of, any undisclosed person, partnership, company, association, organization, or corporation; that the Bid is genuine and not collusive or sham; that Bidder has not directly or indirectly induced or solicited any other bidder to put in a false or sham Bid, and has not directly or indirectly colluded, conspired, connived or agreed with any bidder or anyone else to put in a sham Bid, or that anyone shall refrain from bidding, and that the Bidder has not in any manner, directly or indirectly, sought by agreement, communication or conference with anyone to fix the Bid price of Bidder or any other bidder, or to fix any overhead, profit or cost element of the Bid price, or of that of any other bidder, or to secure any advantage against the City of Santa Clara, or anyone interested in the proposed contract; that all statements contained in the Bid are true; and further, that Bidder has not, directly or indirectly, submitted its Bid price or any breakdown thereof, or the contents thereof, or divulged information or data relative thereto, or paid, and will not pay, any fee to any corporation, partnership, company association, organization, Bid depository, or to any member or agent thereof to effectuate a collusive or sham Bid.

Executed under penalty of perjury under the laws of the State of California:

Bidder: _____
Company Name

By: _____
Signature

Name: _____

Title: _____

Subscribed and sworn before me _____

This _____ day of _____, 20___

Notary Public of the State of _____

In and for the County of_____

My Commission expires_____ (Seal)

(If Bidder is a partnership or a joint venture, this affidavit must be signed and sworn to by every member of the partnership or venture.)

(If Bidder [including any partner or venturer of a partnership or joint venture] is a corporation, this affidavit must be signed by the Chairman, President, or Vice President and by the Secretary, Assistant Secretary, Chief Financial Officer, or Assistant Treasurer.)

(If Bidder's affidavit on this form is made outside the State of California, the official position of the person taking such affidavit shall be certified according to law.)

END OF DOCUMENT

# DOCUMENT 00510

# NOTICE OF AWARD

_____, 200__

**DELIVERY VIA:** Certified Mail

**BIDDER'S NAME**: _____

**BIDDER'S ADDRESS**: _____

**ATTENTION**: _____

**CONTRACT REFERENCE**: City of Santa Clara Contract No. 2375B

**PROJECT REFERENCE**: PALM SUBSTATION 60Kv EXTENSION PROJECT

**********

Congratulations, the intent of this letter is to inform you that the bid you submitted to the City of Santa Clara on _____ 200__ for the above referenced public works contract ("Contract"), has been received and reviewed by City staff. Your firm has been determined to be the lowest responsible and responsive bidder. Based on your bid and City staff recommendation, the Santa Clara City Council has awarded the Contract to your firm for the construction of the PALM SUBSTATION 60Kv EXTENSION project (the "Project"). The Contract Price for this Contract is _____ thousand, _____ hundred and _____ dollars and ____ cents ($_____.00).

1. However, before the City can execute this Contract and issue a Notice to Proceed to you to begin work on the Project, you must deliver the following documents to the Office of the City Clerk at 1500 Warburton Avenue, Santa Clara, CA 95050, within the next fifteen (15) days (on or before 5:00 p.m. on _____, 200__):

2. Two (2) complete originals of Contract **Document 00520 – Agreement.** Each copy must have original signature(s) of authorized representatives of your firm on the signature page.

3. One (1) complete original of Contract **Document 00610 - Construction Performance Bond**, which confirms that the required bond has been purchased in an amount equal to the Contract price. The bond must be fully executed by authorized representatives of your firm and your surety. The signature of the surety must be notarized and the notary form must be attached to Document 00610.

4. One (1) complete original of Contract **Document 00620 - Construction Labor and Materials Payment Bond**, which confirms that the required bond has been purchased in an amount equal to the Contract price. The bond must be fully executed by authorized representatives of your firm and your surety. The signature of the surety must be notarized and the notary form must be attached to Document 00620.

5. One (1) completed original of Contract **Document 00630 - Guaranty**, with original signature(s) of authorized representatives of your firm on the signature page.

6. Deliver to the City the documentary evidence received or generated by you in preparation of the bid prices for this Contact for purposes of escrowing such documents as set forth in **Document 00670 – Escrow Bid Documents**.

7. In addition to delivering the above referenced documents directly to the City Clerk, you must also deliver the following documents, as set forth in Contract **Document 00822 - Insurance Requirements**, directly to the City's insurance compliance contractor, **Insurance Data Services**:

   a. All of the Certificate(s) of Insurance showing proof that all of the required insurance policies have been purchased and are currently in effect;
   b. All of the required insurance policy endorsements; and
   c. Written confirmation that the insurance companies which have issued your insurance policies meet or exceed the required AM Best rating of "A-VI".

Please forward all insurance compliance information to:

City of Santa Clara, C/O Insurance Data Services - Insurance Compliance

| | |
|---|---|
| P.O. 12010-S2 | (or for courier delivery): |
| Hemet, CA 92546-8010 | 151 North Lyon Avenue |
| Telephone: (909)766-2280 | Hemet, CA 92543 |
| Fax: (909)766-2299 | |

**IMPORTANT NOTE REGARDING YOUR INSURANCE COMPLIANCE DOCUMENTS:**

Please do not send the required insurance compliance documents directly to the City offices. Doing so will only delay the necessary review and the issuance of the Notice to Proceed.

**IMPORTANT:** Please note that failure to comply with any of the above referenced conditions within the time period specified above will entitle City, at its sole discretion, to: 1) consider your Bid abandoned; 2) annul this Notice of Award; and/or 3) declare your Bid security forfeited. Even if the City does not choose to exercise any of these options, any delay in providing said documentation beyond the deadline indicated above will not extend the Contract Time allowed for performing the Work as set forth in the Contract Documents. Any time delay caused by failure to comply with the required documentation set forth in this Notice of Award will be subtracted from the time allowed to perform the Work as specified in Document 00520, of the Contract Documents.

After a Notice to Proceed has been issued and upon commencement of the Work under this Contract, your firm, and each of your subcontractors, must certify and make available for inspection, payroll records on forms provided by the Division of Labor Standards Enforcement, in accordance with Section 1776 of the California Labor Code.

After you have complied with the conditions of this **Document 00510 – Notice of Award**, the City will execute the agreement return one fully signed copy of **Contract Document 00520 - Agreement** to you for your records.

Once again, congratulations on being awarded this Contract. We look forward to working with your firm on this Project. If you have any questions regarding this Notice of Award, please contact John Schwartz, in the City Electric Department at (408) 615-6694.

Sincerely,

_____

ROD DIRIDON, JR.,
City Clerk
City of Santa Clara, California,
a chartered California municipal corporation

END OF DOCUMENT 00510

THIS PAGE

INTENTIONALLY

LEFT BLANK

# DOCUMENT 00520

# AGREEMENT

THIS AGREEMENT, dated this ____ day of _____, 20__ , by and between

_____
[Name of Contractor]

whose place of business is located at _____,

_____ ("Contractor"),
[Address of Contractor]

and the CITY OF SANTA CLARA, a chartered Municipal Corporation of the State of California ("City" ) acting under and by virtue of the authority vested in the City by the laws of the State of California.

WHEREAS, City has awarded to Contractor the following contract:

**CONTRACT NUMBER 2375B**
**THE PALM SUBSTATION 60kV EXTENSION PROJECT**

NOW, THEREFORE, in consideration of the mutual covenants hereinafter set forth, Contractor and City agree as follows:

## Article 1. Work

1.1 Contractor shall complete all Work specified in the Contract Documents, in accordance with the Specifications, Drawings, and all other terms and conditions of the Contract Documents.

## Article 2. Agency and Notices to City

2.1 City has designated Director of Electric Utility to act as City's Representative, who will represent City in performing City's duties and responsibilities and exercising City's rights and authorities in Contract Documents. City may change the individual(s) acting as City's Representative(s), or delegate one or more specific functions to one or more specific City's Representatives, including without limitation engineering, architectural, inspection and general administrative functions, at any time with notice and without liability to Contractor. Each City's Representative is the beneficiary of all Contractor obligations to City, including without limitation, all releases and indemnities.

2.2 City has designated MTH Engineers, Inc. to act as Consulting Engineer. City may change the identity of the Consulting Engineer at any time with notice and without liability to Contractor.

2.3 All notices or demands to City under the Contract Documents shall be to City's Representative at:

Director of Electric Utility
Silicon Valley Power
1500 Warburton Avenue
Santa Clara, California 95050

or to such other person(s) and address(es) as City shall provide to Contractor.

## Article 3. Contract Time and Liquidated Damages

3.1 Contract Time.

Contractor shall commence Work at the Site on the date established in the Notice to Proceed. City reserves the right to modify or alter the Commencement Date of the Work.

Contractor shall achieve Substantial Completion of the entire Work (other than erosion control and non-substantial punch list items) by _____. Contract Time commences to run as provided in Document 00700 (General Conditions). Contractor shall achieve Final Completion of the entire Work and be ready for Final Payment in accordance with Section 01770 (Contract Closeout) by _____.

3.2 Liquidated Damages.

City and Contractor recognize that time is of the essence of this Agreement and that City will suffer financial loss in the form of contract administration expenses (such as project management and consultant expenses), if all or any part of the Work is not completed within the times specified above, plus any extensions thereof allowed in accordance with the Contract Documents. Consistent with Article 15 of Document 00700 (General Conditions), Contractor and City agree that because of the nature of the Project, it would be impractical or extremely difficult to fix the amount of actual damages incurred by City because of a delay in completion of all or any part of the Work. Accordingly, City and Contractor agree that as liquidated damages for delay Contractor shall pay City:

3.2.1 $1500.00 for each Day that expires after the time specified herein for Contractor to achieve Substantial Completion of the entire Work until achieved.

3.2.2 $500.00 for each Day that expires after the time specified herein for Contractor to achieve Final Completion of the entire Work, until achieved; provided that the amount will be $1500.00 per day until Substantial Completion of the entire Work is achieved.

These measures of liquidated damages shall apply cumulatively and except as provided below, shall be presumed to be the damages suffered by City resulting from delay in completion of the Work.

3.3 Liquidated damages for delay shall only cover administrative, overhead, interest on bonds, and general loss of public use damages suffered by City as a result of delay. Liquidated damages shall not cover the cost of completion of the Work, damages resulting from defective Work, lost revenues or costs of substitute facilities, or damages suffered by others who then seek to recover their damages from City (for example, delay claims of other contractors, subcontractors, tenants, or other third-parties), and defense costs thereof.

## Article 4. Contract Sum

4.1 City shall pay Contractor the Contract Sum for completion of Work in accordance with Contract Documents as set forth in Contractor's Bid, attached hereto:

| **CONTRACT SUM** (Lump Sum Bid from 00400 – BID FORM) | **$** |
|---|---|
| **CONTRACT SUM** (In words) | .....<br>..... |

## Article 5. Contractor's Representations

In order to induce City to enter into this Agreement, Contractor makes the following representations and warranties:

5.1 Contractor has visited the Site and has examined thoroughly and understood the nature and extent of the Contract Documents, Work, Site, locality, actual conditions, as-built conditions, and all local conditions, and federal, state and local laws and regulations that in any manner may affect cost, progress, performance or furnishing of Work or which relate to any aspect of the means, methods, techniques, sequences or procedures of construction to be employed by Contractor and safety precautions and programs incident thereto.

5.2 Contractor has examined thoroughly and understood all reports of exploration and tests of subsurface conditions, as-built drawings, drawings, products specifications or reports, available for Bidding purposes, of physical conditions, including Underground Facilities, which are identified in Document 00320 (Geotechnical Data and Existing Conditions), or which may appear in the Drawings. Contractor accepts the determination set forth in these Documents and Document 00700 (General Conditions) of the limited extent of the information contained in such materials upon which Contractor may be entitled to rely. Contractor agrees that except for the information so identified, Contractor does not and shall not rely on any other information contained in such reports and drawings.

5.3 Contractor has conducted or obtained and has understood all such examinations, investigations, explorations, tests, reports and studies (in addition to or to supplement those referred to in Section 5.2 of this Document 00520) that pertain to the subsurface conditions, as-built conditions, Underground Facilities and all other physical conditions at or contiguous to the Site or otherwise that may affect the cost, progress, performance or furnishing of Work, as Contractor considers necessary for the performance or furnishing of Work at the Contract Sum, within the Contract Time and in accordance with the other terms and conditions of the Contract Documents, including specifically the provisions of Document 00700 (General Conditions); and no additional examinations, investigations, explorations, tests, reports, studies or similar information or data are or will be required by Contractor for such purposes.

5.4 Contractor has correlated its knowledge and the results of all such observations, examinations, investigations, explorations, tests, reports and studies with the terms and conditions of the Contract Documents.

5.5 Contractor has given City prompt written notice of all conflicts, errors, ambiguities, or discrepancies that it has discovered in or among the Contract Documents and as-built drawings and actual conditions and the written resolution thereof through Addenda issued by City is acceptable to Contractor.

5.6 Contractor is duly organized, existing and in good standing under applicable state law, and is duly qualified to conduct business in the State of California.

5.7 Contractor has duly authorized the execution, delivery and performance of this Agreement, the other Contract Documents and the Work to be performed herein. The Contract Documents do not violate or create a default under any instrument, agreement, order or decree binding on Contractor.

5.8 Contractor has listed the following Subcontractors pursuant to the Subcontractor Listing Law, California Public Contracting Code §4100 *et seq.* on Document 00430 (Subcontractors List)

**Article 6. Contract Documents**

6.1 Contract Documents consist of the following documents, including all changes, addenda, and modifications thereto:

6.1.1 Division 0 – Bidding Requirements

| | |
|---|---|
| Document 00100 | Advertisement for Bids |
| Document 00200 | Instructions to Bidders |
| Document 00210 | Indemnity and Release Agreement |
| Document 00250 | Bid Contents, Evaluation, Selection and Award |
| Document 00320 | Geotechnical Data and Existing Conditions |
| Document 00400 | Bid Forms |
| Document 00411 | Bond Accompanying Bid |
| Document 00420 | Bidder Registration Form |
| Document 00421 | Declaration of Contractor's License Status |
| Document 00430 | Subcontractors List Form |
| Document 00440 | Affidavit of Compliance with Ethical Standards |
| Document 00441 | Ethical Standards for Contractors |
| Document 00450 | Statement of Qualifications for Construction Work |
| Document 00460 | Schedule of Major Equipment and Material Suppliers |
| Document 00481 | Non-Collusion Affidavit |

6.1.2 Division 0 – Contracting Requirements

| | |
|---|---|
| Document 00510 | Notice of Award |
| Document 00520 | Agreement |
| Document 00550 | Notice to Proceed |
| Document 00610 | Construction Performance Bond |
| Document 00620 | Construction Labor and Material Payment Bond |
| Document 00630 | Guaranty |
| Document 00650 | Agreement and Release of Any and All Claims |
| Document 00654 | Workers' Compensation Insurance Statement |
| Document 00660 | Substitution Request Form |
| Document 00670 | Escrow Bid Documents |
| Document 00680 | Escrow Agreement for Security Deposit in Lieu of Retention |

6.1.3 Division 0 – Conditions of the Contract

| | |
|---|---|
| Document 00700 | General Conditions |
| Document 00800 | Supplementary Conditions |
| Document 00805 | Supplementary Conditions – Hazardous Materials |
| Document 00821 | Insurance |

Document 00822 Apprenticeship Program
Document 00910 Addenda

6.1.4 Division 1 – General Requirements

Section 01100 – Summary of Work
Section 01200 – Measurement and Payment
Section 01250 – Modification Procedure
Section 01315 – Project Meetings
Section 01320 – Progress Schedules and Reports
Section 01330 – Submittal Procedures
Section 01350 – Special Procedures
Section 01410 – Regulatory Requirements
Section 01411 – Regulatory Requirements - Hazardous Materials
Section 01420 – References and Definitions
Section 01455 – Testing and Inspection
Section 01500 – Temporary Facilities and Controls
Section 01540 – Site Security and Safety
Section 01600 – Product Requirements
Section 01620 - Product Options
Section 01715 – Existing Underground Facilities
Section 01731 - Cutting and Patching
Section 01740 – Cleaning
Section 01770 – Contract Closeout
Section 01780 – Project Record Documents

6.1.5 Division 2 – Site Construction

Section 02585 – Utility Poles
Section 02590 – Site Grounding

6.1.6 Division 16 – Electrical

Section 16311 – Line Materials

6.1.7 Plans including Maps, Drawings, and Sketches

All plans and drawings listed on Document 00015 – (List of Maps, Drawings, and Sketches

6.2 There are no Contract Documents other than those listed in this Document 00520, Article 6. Document 00320 (Geotechnical Data and Existing Conditions), and the information supplied therein, are not Contract Documents. The Contract Documents may only be amended, modified or supplemented as provided in Document 00700 (General Conditions).

**Article 7. Miscellaneous**

7.1 Terms used in this Agreement are defined in Document 00700 (General Conditions) and Section 01420 (References and Definitions) and will have the meaning indicated therein.

7.2 It is understood and agreed that in no instance are the persons signing this Agreement for or on behalf of City or acting as an employee, agent, or representative of City, liable on this Agreement or any of the Contract Documents, or upon any warranty of authority, or otherwise, and it is further understood and agreed that liability of the City is limited and confined to such liability as authorized or imposed by the Contract Documents or applicable law.

7.3 Contractor shall not assign any portion of the Contract Documents, and may subcontract portions of the Contract Documents only in compliance with the Subcontractor Listing Law, California Public Contracting Code §4100 *et seq.*

7.4 The Contract Sum includes all allowances (if any).

7.5 In entering into a public works contract or a subcontract to supply goods, services or materials pursuant to a public works contract, Contractor or Subcontractor offers and agrees to assign to the awarding body all rights, title and interest in and to all causes of action it may have under Section 4 of the Clayton Act (15 U.S.C. §15) or under the Cartwright Act (Chapter 2 (commencing with Section 16700) of Part 2 of Division 7 of the Business and Professions Code), arising from purchases of goods, services or materials pursuant to the public works contract or the subcontract. This assignment shall be made and become effective at the time City tenders final payment to Contractor, without further acknowledgment by the parties.

7.6 Copies of the general prevailing rates of per diem wages for each craft, classification, or type of worker needed to execute the Contract, as determined by Director of the State of California Department of Industrial Relations, are deemed included in the Contract Documents and on file at City's office, and shall be made available to any interested party on request. Pursuant to Section 1861 of the Labor Code, Contractor represents that it is aware of the provisions of Section 3700 of the Labor Code which require every employer to be insured against liability for workers' compensation or to undertake self-insurance in accordance with the provisions of that Code, and Contractor shall comply with such provisions before commencing the performance of the Work of the Contract Documents.

7.7 Should any part, term or provision of this Agreement or any of the Contract Documents, or any document required herein or therein to be executed or delivered, be declared invalid, void or unenforceable, all remaining parts, terms and provisions shall remain in full force and effect and shall in no way be invalidated, impaired or affected thereby. If the provisions of any law causing such invalidity, illegality or unenforceability may be waived, they are hereby waived to the end that this Agreement and the Contract Documents may be deemed valid and binding agreements, enforceable in accordance with their terms to the greatest extent permitted by applicable law. In the event any provision not otherwise included in the Contract Documents is required to be included by any applicable law, that provision is deemed included herein by this reference (or, if such provision is required to be included in any particular portion of the Contract Documents, that provision is deemed included in that portion).

7.8 This Agreement and the Contract Documents shall be deemed to have been entered into in the County of Santa Clara, State of California, and governed in all respects by California law (excluding choice of law rules). The exclusive venue for all disputes or litigation hereunder shall be in Santa Clara County. Both parties hereby waive their rights under California Code of Civil Procedure Section 394 to file a motion to transfer any action or proceeding arising out of the Contract Documents to another venue.

Contractor accepts the Claims Procedure in Document 00700, Article 12, established under the California Government Code, Title 1, Division 3.6, Part 3, Chapter 5.

The Parties acknowledge and accept the terms and conditions of this Agreement as evidenced by the following signatures of their duly authorized representatives. It is the intent of the Parties that this Agreement shall become operative on the Effective Date first set forth above.

**CITY OF SANTA CLARA, CALIFORNIA**
a chartered California municipal corporation

Approved as to form:

_____
HELENE LEICHTER
City Attorney

_____
JENNIFER SPARACINO
City Manager

1500 Warburton Avenue
Santa Clara, CA 95050
Telephone: (408) 615-2210
Fax: (408) 241-0347

Attest:

_____
ROD DIRIDON JR.
City Clerk

"City"

_____
*[NAME OF BUSINESS/COMPANY]

A _____ (Corp/Partnership/Trust, Etc)

By: _____
(Signature of Person executing the Agreement on behalf of Contractor.)

_____
(Please Print or Type Name)

Title: _____

Local Address: _____

_____

_____

Telephone: (____) _____-_____

Fax: (____) _____-_____

"Contractor"

**END OF DOCUMENT**

THIS PAGE

INTENTIONALLY

LEFT BLANK

# DOCUMENT 00550

# NOTICE TO PROCEED

The Notice of Proceed for this contract will be correspondence from the City of Santa Clara to the Contractor and will be in a form substantially similar to that shown below.

Date: _____

Contact Name: _____

Contact Title: _____

Company Name: _____

Mailing Address: _____

_____ _____ _____
City State Zip

Contract Ref. ***Public Works Contract 2375B***

Project Ref. ***PALM SUBSTATION 60kV EXTENSION Project***

You are notified that the Contract Time under the above Contract will commence to run on _____ 20___. On that date, you are to start performing your obligations with respect to Work at the Site under the Contract Documents. In accordance with Article 3 of Document 00520 (Agreement), the dates of Substantial Completion and Final Completion for the entire Work are _____ and _____, respectively.

**Before you may start any Work at the Site, you must:**

1. Submit certified Safety Program and related information.
2. Submit copies of applicable permits
3. Submit approved fire protection plan, if applicable
4. Attend preconstruction conference.
5. [__Additional Conditions as Necessary__]

**Silicon Valley Power**

_____
By:
Its:

END OF DOCUMENT

THIS PAGE

INTENTIONALLY

LEFT BLANK

# DOCUMENT 00610

# CONSTRUCTION PERFORMANCE BOND

This Construction Performance Bond ("Bond"), dated _____, 200__, is issued in the amount of _____ Dollars, ($_____.___), (the "Penal Sum ") which is equal to one hundred percent of the Contract Price, and is entered into by and between the Contractor and the Surety to ensure the faithful performance of the Construction Contract defined below. This Bond consists of this page and the Bond Terms and Conditions, Paragraphs 1 through 13, attached and incorporated by this reference. The Contractor and Surety are the parties to this Bond, which has been issued for the benefit of the City of Santa Clara, California, a chartered California municipal corporation ("City") and in compliance with the terms of the Construction Contract. Any singular reference to the Contractor, Surety, City or other party shall be considered plural where applicable.

The City of Santa Clara Construction Contract to which this Bond applies is:

**CONTRACT 2375B THE PALM SUBSTATION 60kV EXTENSION PROJECT**

**Awarded _____ ___, 200__ in the amount of $_____**("Contract Price")

The Contractor and Surety each acknowledge and accept the terms and conditions of this Bond as evidenced by the following signatures of their representatives. The Contractor and Surety each specifically represent that the individual representatives who have signed below are duly authorized to execute this Bond on its behalf. It is the intent of the Parties that this Bond shall become operative on the date first set forth above.

| **CONTRACTOR AS PRINCIPAL:** | **SURETY:** |
|---|---|
| Name: _____ | Name: _____ |
| Principal Place of Business: | Principal Place of Business: |
| Address: _____ | Address: _____ |
| City/State/Zip: _____ | City/State/Zip: _____ |
| Signature: _____ | Signature: _____ |
| Name: _____ | Name: _____ |
| Title: _____ | Title: _____ |

**(Please Note: Surety Signature must be notarized)**

Please Apply Corporate Seal Here

Please Apply Corporate Seal Here)

Approved as to Form:

_____ Date: _____

City Attorney

## BOND TERMS AND CONDITIONS

1. Contractor and Surety, jointly and severally, bind themselves, their heirs, executors, administrators, successors and assigns to City for the complete and proper performance of the Construction Contract, which is incorporated herein by reference.

2. If Contractor completely and properly performs all of its obligations under the Construction Contract, Surety and Contractor shall have no obligation under this Bond.

3. If there is no City Default, Surety's obligation under this Bond shall arise after:

   3.1 City has declared a Contractor Default under the Construction Contract pursuant to the terms of the Construction Contract; and

   3.2 City has agreed to pay the Balance of the Contract Price:

      3.2.1 To Surety in accordance with the terms of this Bond and the Construction Contract; or

      3.2.2 To a contractor selected to perform the Construction Contract in accordance with the terms of this Bond and the Construction Contract.

4. When City has satisfied the conditions of paragraph 3, Surety shall promptly (within 30 days) and at Surety's expense elect to take one of the following actions:

   4.1 Arrange for Contractor, with consent of City, to perform and complete the Construction Contract (but City may withhold consent, in which case the Surety must elect an option described in paragraphs 4.2, 4.3 or 4.4, below); or

   4.2 Undertake to perform and complete the Construction Contract itself, through its agents or through independent contractors; provided, that Surety may not select Contractor as its agent or independent contractor without City's consent; or

   4.3 Undertake to perform and complete the Construction Contract by obtaining bids from qualified contractors acceptable to City for a contract for performance and completion of the Construction Contract, and, upon determination by City of the lowest responsible bidder, arrange for a contract to be prepared for execution by City and the contractor selected with City's concurrence, to be secured with performance and payment bonds executed by a qualified surety equivalent to the bonds issued on the Construction Contract; and, if Surety's obligations defined in paragraph 6, below, exceed the Balance of the Contract Price, then Surety shall pay to City the amount of such excess; or

   4.4 Waive its right to perform and complete, arrange for completion, or obtain a new contractor and with reasonable promptness under the circumstances, and, after investigation and consultation with City, determine in good faith its monetary obligation to City under paragraph 6, below, for the performance and completion of the Construction Contract and, as soon as practicable after the amount is determined, tender payment therefor to City with full explanation of the payment's calculation. If City accepts Surety's tender under this paragraph 4.4, City may still hold Surety liable for future damages then unknown or unliquidated resulting from the Contractor Default. If City disputes the amount of Surety's tender under this paragraph 4.4, City may exercise all remedies available to it at law to enforce Surety's liability under paragraph 6, below.

5. If Surety does not proceed as provided in paragraph 4, above, then Surety shall be deemed to be in default on this Bond ten days after receipt of an additional written notice from City to Surety demanding that Surety perform its obligations under this Bond. At all times City shall be entitled to enforce any remedy available to City at law or under the Construction Contract including, without limitation, and by way of example only, rights to perform work, protect work, mitigate damages, advance critical work to mitigate schedule delay, or coordinate work with other consultants or contractors.

6. Surety's monetary obligation under this Bond is limited by the Amount of this Bond identified herein as the Penal Sum. This monetary obligation shall augment the Balance of the Contract Price. Subject to these limits, Surety's obligations under this Bond are commensurate with the obligations of Contractor under the Construction Contract. Surety's obligations shall include, but are not limited to:

   6.1 The responsibilities of Contractor under the Construction Contract for completion of the Construction Contract and correction of defective work;

   6.2 The responsibilities of Contractor under the Construction Contract to pay liquidated damages, and for damages for which no liquidated damages are specified in the Construction Contract, actual damages caused by non-performance of the Construction Contract including, but not limited to, all valid and proper backcharges, offsets, payments, indemnities, or other damages;

   6.3 Additional legal, design professional and delay costs resulting from Contractor Default or resulting from the actions or failure to act of the Surety under paragraph 4, above (but excluding attorney's fees incurred to enforce this Bond).

7. No right of action shall accrue on this Bond to any person or entity other than City or its successors or assigns.

8. Surety hereby waives notice of any change, alteration or addition to the Construction Contract or to related subcontracts, purchase orders and other obligations, including changes of time. Surety consents to all terms of the Construction Contract, including provisions on changes to the Contract. No extension of time, change, alteration, modification, deletion, or addition to the Contract Documents, or of the work required thereunder, shall release or exonerate Surety on this Bond or in any way affect the obligations of Surety on this Bond.

9. Any proceeding, legal or equitable, under this Bond shall be instituted in any court of competent jurisdiction where a proceeding is pending between City and Contractor regarding the Construction Contract, or in the courts of the County of Santa Clara, or in a court of competent jurisdiction in the location in which the work is located. Communications from City to Surety under paragraph 3.1 of this Bond shall be deemed to include the necessary agreements under paragraph 3.2 of this Bond unless expressly stated otherwise.

10. All notices to Surety or Contractor shall be mailed or delivered (at the address set forth on the signature page of this Bond), and all notices to City shall be mailed or delivered as provided in Document 00520 (Agreement). Actual receipt of notice by Surety, City or Contractor, however accomplished, shall be sufficient compliance as of the date received at the foregoing addresses.

11. Any provision in this Bond conflicting with any statutory or regulatory requirement shall be deemed deleted herefrom and provisions conforming to such statutory requirement shall be deemed incorporated herein.

12. Definitions.

12.1 Balance of the Contract Price: The total amount payable by City to Contractor pursuant to the terms of the Construction Contract after all proper adjustments have been made under the Construction Contract, for example, deductions for progress payments made, and increases/decreases for approved modifications to the Construction Contract.

12.2 Construction Contract: The agreement between City and Contractor identified on the signature page of this Bond, including all Contract Documents and changes thereto.

12.3 Contractor Default: Material failure of Contractor, which has neither been remedied nor waived, to perform or otherwise to comply with the terms of the Construction Contract including, but not limited to, "default" or any other condition allowing a termination for cause as provided in Document 00700 (General Conditions).

12.4 City Default: Material failure of City, which has neither been remedied nor waived, to pay Contractor progress payments due under the Construction Contract or to perform other material terms of the Construction Contract, if such failure is the cause of the asserted Contractor Default and is sufficient to justify Contractor termination of the Construction Contract.

13. Surety shall submit following documents along with this Construction Performance Bond:

13.1 Verification that Surety is admitted to transact surety business the State of California; and

13.2 Copy of Surety's Certificate of authority issued by the insurance Commissioner of the State of California along with a statement that said Certificate has not been surrendered, revoked, cancelled, annulled or suspended.

END OF DOCUMENT

# DOCUMENT 00620

# CONSTRUCTION LABOR AND MATERIAL PAYMENT BOND

This Construction Labor and Material Payment Bond ("Bond"), dated _____, 200__, is issued in the amount of _____ Dollars, ($_____.___), (the "Penal Sum ") which is equal to one hundred percent of the Contract Price, and is entered into by and between the Contractor and the Surety to ensure the payment of claimants under the Construction Contract defined below. This Bond consists of this page and Bond Terms and Conditions, Paragraphs 1 through 14, attached and incorporated by this reference. The Contractor and Surety are the parties to this Bond, which has been issued for the benefit of the City of Santa Clara, California, a chartered California municipal corporation ("City") in compliance with the terms of the Construction Contract. Any singular reference to the Contractor, Surety, City or other party shall be considered plural where applicable.

The City of Santa Clara Construction Contract to which this Bond applies is:

**CONTRACT 2375B THE PALM SUBSTATION 60kV EXTENSION PROJECT**

**Awarded _____ ___, 200__ in the amount of $_____**("Contract Price")

The Contractor and Surety each acknowledge and accept the terms and conditions of this Bond as evidenced by the following signatures of their representatives. The Contractor and Surety each specifically represent that the individual representatives who have signed below are duly authorized to execute this Bond on its behalf. It is the intent of the Parties that this Bond shall become operative on the date first set forth above.

| **CONTRACTOR AS PRINCIPAL:** | **SURETY:** |
|---|---|
| Name: _____ | Name: _____ |
| Principal Place of Business: | Principal Place of Business: |
| Address: _____ | Address: _____ |
| City/State/Zip: _____ | City/State/Zip: _____ |
| Signature: _____ | Signature: _____ |
| Name: _____ | Name: _____ |
| Title: _____ | Title: _____ |

**(Please Note: Surety Signature must be notarized)**

Please Apply Corporate Seal Here

Please Apply Corporate Seal Here)

Approved as to Form:

_____

Date: _____

City Attorney

## BOND TERMS AND CONDITIONS

1. Contractor and Surety, jointly and severally, bind themselves, their heirs, executors, administrators, successors and assigns to City and to Claimants, to pay for labor, materials and equipment furnished for use in the performance of the Construction Contract, which is incorporated herein by reference.

2. With respect to City, this obligation shall be null and void if Contractor:

   2.1 Promptly makes payment, directly or indirectly, for all sums due Claimants; and

   2.2 Defends, indemnifies and holds harmless City from all claims, demands, liens or suits by any person or entity who furnished labor, materials or equipment for use in the performance of the Construction Contact, provided City has promptly notified Contractor and Surety (at the address set forth on the signature page of this Bond) of any claims, demands, liens or suits and tendered defense of such claims, demands, liens or suits to Contractor and Surety, and provided there is no City Default.

3. With respect to Claimants, this obligation shall be null and void if Contractor promptly makes payment, directly or indirectly through its Subcontractors, for all sums due Claimants. If Contractor or its Subcontractors, however, fail to pay any of the persons named in Section 3181 of the California Civil Code, or amounts due under the Unemployment Insurance Code with respect to Work or labor performed under the Contract, or for any amounts required to be deducted, withheld, and paid over to the Employment Development Department from the wages of employees of Contractor or Subcontractors pursuant to Section 13020 of the Unemployment Insurance Code, with respect to such Work and labor, then Surety shall pay for the same, and also, in case suit is brought upon this Bond, a reasonable attorney's fee, to be fixed by the court.

4. Consistent with the California Mechanic's Lien Law, Civil Code §3082, *et seq.*, Surety shall have no obligation to Claimants under this Bond unless the Claimant has satisfied all applicable notice requirements.

5. Surety's total obligation shall not exceed the amount of this Bond, and the amount of this Bond shall be credited for any payments made in good faith by Surety under this Bond.

6. Amounts due Contractor under the Construction Contract shall be applied first to satisfy claims, if any, under any Construction Performance Bond and second, to satisfy obligations of Contractor and Surety under this Bond.

7. City shall not be liable for payment of any costs, expenses, or attorney's fees of any Claimant under this Bond, and shall have under this Bond no obligations to make payments to, give notices on behalf of, or otherwise have obligations to Claimants under this Bond.

8. Surety hereby waives notice of any change, including changes of time, to the Construction Contract or to related subcontracts, purchase orders and other obligations. Surety further hereby stipulates and agrees that no change, extension of time, alteration or addition to the terms of the Construction Contract, or to the Work to be performed thereunder, or materials or equipment to be furnished thereunder or the Specifications accompanying the same, shall in any way affect its obligations under this Bond, and it does hereby waive any requirement of notice or any such change, extension of time, alteration or addition to the terms of the Construction Contract or to the Work or to the Specifications or any other changes.

9. Suit against Surety on this Bond may be brought by any Claimant, or its assigns, at any time after the Claimant has furnished the last of the labor or materials, or both, but, per Civil Code §3249, must be commenced before the expiration of six months after the period in which stop notices may be filed as provided in Civil Code §3184.

10. All notices to Surety or Contractor shall be mailed or delivered (at the address set forth on the signature page of this Bond), and all notices to City shall be mailed or delivered as provided in Document 00520 (Agreement). Actual receipt of notice by Surety, City or Contractor, however accomplished, shall be sufficient compliance as of the date received at the foregoing addresses.

11. This Bond has been furnished to comply with the California Mechanic's Lien Law including, but not limited to, Civil Code §§3247, 3248, *et seq.* Any provision in this Bond conflicting with said statutory requirements shall be deemed deleted herefrom and provisions conforming to such statutory or other legal requirements shall be deemed incorporated herein. The intent is that this Bond shall be construed as a statutory bond and not as a common law bond.

12. Upon request by any person or entity appearing to be a potential beneficiary of this Bond, Contractor shall promptly furnish a copy of this Bond or shall permit a copy to be made.

13. Definitions.

    13.1 Claimant: An individual or entity having a direct contract with Contractor or with a Subcontractor of Contractor to furnish labor, materials or equipment for use in the performance of the Contract, as further defined in California Civil Code §3181. The intent of this Bond shall be to include without limitation in the terms "labor, materials or equipment" that part of water, gas, power, light, heat, oil, gasoline, telephone service or rental equipment used in the Construction Contract, architectural and engineering services required for performance of the Work of Contractor and Contractor's Subcontractors, and all other items for which a stop notice might be asserted. The term Claimant shall also include the Unemployment Development Department as referred to in Civil Code §3248(b).

    13.2 Construction Contract: The agreement between City and Contractor identified on the signature page of this Bond, including all Contract Documents and changes thereto.

    13.3 City Default: Material failure of City, which has neither been remedied nor waived, to pay the Contractor as required by the Construction Contract, provided that failure is the cause of the failure of Contractor to pay the Claimants and is sufficient to justify termination of the Construction Contract.

14. Surety shall submit following documents along with this Construction Labor and Material Payment Bond:

    14.1 Verification that Surety is admitted to transact surety business in the State of California; and

    14.2 Copy of Surety's Certificate of authority issued by the insurance Commissioner of the State of California along with a statement that said Certificate has not been surrendered, revoked, cancelled, annulled or suspended.

END OF DOCUMENT

THIS PAGE

INTENTIONALLY

LEFT BLANK

# DOCUMENT 00630

# GUARANTY

TO THE CITY OF SANTA CLARA, a chartered Municipal Corporation of the State of California ("City"), for construction of

**THE PALM SUBSTATION 60kV EXTENSION PROJECT**

SANTA CLARA, CALIFORNIA

The undersigned guarantees all construction performed on this Project and also guarantees all material and equipment incorporated therein.

Contractor hereby grants to City for a period of one year following the date of Final Completion, or such longer period specified in the Contract Documents, its unconditional warranty of the quality and adequacy of all of the Work including, without limitation, all labor, materials and equipment provided by Contractor and its Subcontractors of all tiers in connection with the Work.

Neither final payment nor use or occupancy of the Work performed by the Contractor shall constitute an acceptance of Work not done in accordance with this Guaranty or relieve Contractor of liability in respect to any express warranties or responsibilities for faulty materials or workmanship. Contractor shall remedy any defects in the Work and pay for any damage resulting therefrom, which shall appear within one year, or longer if specified, from the date of Final Completion.

If within one year after the date of Final Completion, or such longer period of time as may be prescribed by laws or regulations, or by the terms of Contract Documents, any Work is found to be defective, Contractor shall promptly, without cost to City and in accordance with City's written instructions, correct such defective Work. Contractor shall remove any defective Work rejected by City and replace it with Work that is not defective, and satisfactorily correct or remove and replace any damage to other Work or the work of others resulting therefrom. If Contractor fails to promptly comply with the terms of such instructions, or in an emergency where delay would cause serious risk of loss or damage, City may have the defective Work corrected or the rejected Work removed and replaced. Contractor shall pay for all claims, costs, losses and damages caused by or resulting from such removal and replacement. Where Contractor fails to correct defective Work, or defects are discovered outside the correction period, City shall have all rights and remedies granted by law.

Inspection of the Work shall not relieve Contractor of any of its obligations under the Contract Documents. Even though equipment, materials, or Work required to be provided under the Contract Documents have been inspected, accepted, and estimated for payment, Contractor shall, at its own expense, replace or repair any such equipment, material, or Work found to be defective or otherwise not to comply with the requirements of the Contract Documents up to the end of the guaranty period.

All abbreviations and definitions of terms used in this Agreement shall have the meanings set forth in the Contract Documents, including, without means of limitation, Section 01420 (References and Definitions).

The foregoing Guaranty is in addition to any other warranties of Contractor contained in the Contract Documents, and not in lieu of, any and all other liability imposed on Contractor under the Contract Documents and at law with respect to Contractor's duties, obligations, and

performance under the Contract Documents. In the event of any conflict or inconsistency between the terms of this Guaranty and any warranty or obligation of the Contractor under the Contract Documents or at law, such inconsistency or conflict shall be resolved in favor of the higher level of obligation of the Contractor.

_____
Contractor's Name

_____
Address

_____ _____
City/State/Zip Date

END OF DOCUMENT

# DOCUMENT 00650

# AGREEMENT AND RELEASE OF ANY AND ALL CLAIMS

THIS AGREEMENT AND RELEASE OF ANY AND ALL CLAIMS ("Agreement and Release"), made and entered into this [_____] day of [_____], 200_, by and between the _____("City"), and _____ ("Contractor"), whose place of business is at _____.

RECITALS

A. City and Contractor entered into Contract Number 2375B (the "Contract").

B. The Work under the Contract has been completed.

Now, therefore, it is mutually agreed between City and Contractor as follows:

AGREEMENT

1. Contractor will not be assessed liquidated damages except as detailed below:

| | |
|---|---|
| Original Contract Sum | $ _____ |
| Modified Contract Sum | $ _____ |
| Payment to Date | $ _____ |
| Liquidated Damages | $ _____ |
| Payment Due Contractor | $ _____ |

2. Subject to the provisions of this Agreement and Release, City will forthwith pay to Contractor the sum of $_____ Dollars and _____ Cents ($_____) under the Contract, less any amounts withheld under the Contract or represented by any Notice to Withhold Funds on file with City as of the date of such payment.

3. Contractor acknowledges and hereby agrees that there are no unresolved or outstanding claims in dispute against City arising from the Contract, except for the claims described in paragraph 4 of this Document 00650. It is the intention of the parties in executing this Agreement and Release that this Agreement and Release shall be effective as a full, final and general release of all claims, demands, actions, causes of action, obligations, costs, expenses, damages, losses and liabilities of Contractor against City, and all if its agents, employees, consultants (including without limitation Consulting Engineer), inspectors, representatives, assignees and transferees except for the Disputed Claims set forth in paragraph 4 of this Document 00650. Nothing in this Agreement and Release shall limit or modify Contractor's continuing obligations described in paragraph 6 of this Document 00650.

4. The following claims are disputed (hereinafter, the "Disputed Claims") and are specifically excluded from the operation of this Agreement and Release:

| Claim No. | Date Submitted | Description of Claim | Amount of Claim |
|---|---|---|---|

**[Insert information, including attachment if necessary]**

5. Consistent with California Public Contract Code Section 7100, Contractor hereby agrees that, in consideration of the payment set forth in paragraph 2 of this Document 00650, Contractor hereby releases and forever discharges City, and all of its agents, employees, consultants, inspectors, assignees and transferees from any and all liability, claims, demands, actions or causes of action of whatever kind or nature arising out of or in any way concerned with the Work under the Contract

6. Guarantees and warranties for the Work, and any other continuing obligation of Contractor, shall remain in full force and effect as specified in the Contract Documents.

7. Contractor shall immediately defend, indemnify and hold harmless the City of Santa Clara, Santa Clara County, any of their Representatives, Engineers, and all of their agents, employees, consultants, inspectors, assignees and transferees, from any and all claims, demands, actions, causes of action, obligations, costs, expenses, damages, losses and liabilities that may be asserted against them by any of Contractor's suppliers and/or Subcontractors of any tier and/or any suppliers to them for any and all labor, materials, supplies and equipment used, or contemplated to be used in the performance of the Contract, except for the Disputed Claims set forth in paragraph 4 of this Document 00650.

8. Contractor hereby waives the provisions of California Civil Code Section 1542, which provides as follows:

> A general release does not extend to claims which the creditor does not know or suspect to exist in his favor at the time of executing the release, which if known by him, must have materially affected his settlement with the debtor.

9. The provisions of this Agreement and Release are contractual in nature and not mere recitals and shall be considered independent and severable, and if any such provision or any part thereof shall be at any time held invalid in whole or in part under any federal, state, county, municipal or other law, ruling, or regulation, then such provision, or part thereof shall remain in force and effect only to the extent permitted by law, and the remaining provisions of this Agreement and Release shall also remain in full force and effect, and shall be enforceable.

10. Contractor represents and warrants that it is the true and lawful owner of all claims and other matters released pursuant to this Agreement and Release, and that it has full right, title and authority to enter into this instrument. Each party represents and warrants that it has been represented by counsel of its own choosing in connection with this Agreement and Release.

11. All rights of City shall survive completion of the Work or termination of the Contract, and execution of this Agreement and Release.

* * * CAUTION: THIS IS A RELEASE - READ BEFORE EXECUTING * * *

**CITY OF SANTA CLARA, CALIFORNIA**
a chartered California municipal corporation

Approved as to form:

_____
HELENE LEICHTER
City Attorney

_____
JENNIFER SPARACINO
City Manager

1500 Warburton Avenue
Santa Clara, CA 95050
Telephone : (408) 615-2210
Fax: (408) 241-0347

Attest:

_____
ROD DIRIDON JR.
City Clerk

**[CONTRACTOR]**

By: _____

Name: _____

Its: _____

By: _____

Name: _____

Its: _____

_____, 20 _____

END OF DOCUMENT

THIS PAGE

INTENTIONALLY

LEFT BLANK

# DOCUMENT 00654

# WORKERS' COMPENSATION INSURANCE STATEMENT

| | |
|---|---|
| B | To be submitted as part of Envelope "B" by the time and date specified in Document 00200 (Instructions to Bidders), paragraph 1. |

Contractor hereby states the following:

1. California Labor Code Section 1861 - Certification by Contractor regarding Workers' Compensation Insurance Requirements

   I am aware of the provisions of Section 3700 of the Labor Code of the State of California, which require every employer to be insured against liability for workers' compensation or to undertake self-insurance in accordance with the provisions of that Code, and I will comply with such provisions before commencing the performance of the Work under this Contract.

2. California Labor Code Section 3800 - Declaration verifying Workers' Compensation Insurance Coverage

   In the event the Contractor is determined to be the lowest responsible and responsive bidder and is awarded this Contract by the City, Contractor shall verify under penalty of perjury, and provide evidence or confirmation of the existence and status of its Workers' Compensation Insurance Policy. Such information shall be provided by the Contractor in a form acceptable to the City Attorney or the City's insurance compliance representatives within the time period specified in Document 00510, Notice of Award, and shall include, but not be limited to, evidence or confirmation of the following:

   a. The Contractor has purchased and is maintaining a valid Workers' Compensation Insurance Policy in a form approved by the California Insurance Commissioner, and that said Workers' Compensation Insurance Policy is in full force and effect on behalf of the Contractor;

   b. The full deposit premium on the policy has been paid;

   c. The coverage afforded to the Contractor under its Workers' Compensation Insurance Policy is in accordance with the Workers' Compensation Law of California and complies with California statutory limits;

   d. Verification of the expiration date of the Contractor's Workers' Compensation Insurance Policy;

   e. Advance written notice shall be given to the City in the event of cancellation of the policy. The undersigned shall provide such notice to the City of Santa Clara, Office of the City Clerk at 1500 Warburton Avenue, Santa Clara, CA 95050 within the time period specified in Document 00821, Insurance; and

//

//

f. The policy includes a Waiver of Subrogation in favor of the City of Santa Clara, its City Council, commissions, officers, employees, volunteers and agents.

Contractor: _____

Contractor's Signature

***Note: Signature of the Contractor must be notarized***

By: _____

Print/Type Name of Signatory

Its: _____

Title of Signatory

Signed this _____ day of _____, 200___.

END OF DOCUMENT

# DOCUMENT 00660

# SUBSTITUTION REQUEST FORM

To: The City of Santa Clara, A chartered Municipal Corporation of the State of California ("City")

Project: THE PALM SUBSTATION 60kV EXTENSION PROJECT

Contractor: _____

Subcontractor/Supplier: _____

Drawing Sheet Reference/Detail No: _____

The undersigned Bidder submits for consideration the following equipment instead of the specified item for the above project:

| Section | Paragraph | Specified Item |
|---|---|---|
| _____ | _____ | _____ |
| _____ | _____ | _____ |
| _____ | _____ | _____ |

Proposed Substitution: _____

_____

The undersigned encloses the information required herein. If this Document 00660 is being submitted by a Bidder wishing to use "or equal" item(s) as provided in Document 00200 (Instructions to Bidders), the undersigned Bidder must also enclose the technical information (other than cost) otherwise required for a post-Award of Contract Request for Substitution ("RFS") under Section 01600 (Product Requirements). However, If this Document 00660 is being submitted under provisions of Contract Documents after Award of Contract, the undersigned Contractor must include all information required under Section 1600 (Product Requirements).

The undersigned has (a) attached manufacturer's literature, including complete technical data and laboratory test results, if applicable, (b) attached an explanation of why proposed substitution is a true equivalent to specified item, (c) included complete information on changes to Drawings and Specifications that the proposed substitution will require for its proper installation, and (d) filled in the blanks below:

A. Does the substitution affect dimensions shown on Drawings?

_____

_____

B. Are the manufacturer's guarantees and warranties on the proposed substitution items identical to those on the specified items? If there are differences, please specify each and every difference in detail.

_____

_____

C. What effect does the substitution have on other contractors, trades, or suppliers?

_____

_____

D. What are the differences between the proposed substitution and the specified item? If proposed substitution has a color or pattern, provide a color board showing proposed substitution in relation to the other adjacent colors and patterns.

_____

_____

E. Will granting the requested substitution cause any schedule delay? (If yes, please explain)

_____

_____

The undersigned Bidder certifies that the function, appearance, and quality of the proposed substitution are equivalent or superior to those of the specified item.

Submitted by:

_____
Bidder/Contractor
[note applicable]

_____
Signature

_____
Name

_____
Address

_____
City/State/Zip
Telephone: _____
Date: _____

For Use by City:

____ Accepted _____Accepted as Noted

____ Not Accepted _____Received Too Late

By: _____
City's Representative

Date: _____

Remarks: _____
_____
_____
_____

END OF DOCUMENT

# DOCUMENT 00670

# ESCROW BID DOCUMENTS

**1. Requirements for Escrow Bid Documents.**

a. Within the time period established in Document 00200 -Instructions to Bidders and Document 00510 – Notice of Award, Contractor shall submit to City a set of Escrow Bid Documents as defined in paragraph 2 below. Escrow Bid Documents will be used only in the manner and for the purposes described in this Document 00670.

b. The submission of the Escrow Bid Documents, as with the bonds and insurance documents required under Document 00200 (Instructions to Bidders), is considered an essential part of the Contract award. Should Contractor fail to make the submission within the allowed time specified, Contractor may be deemed to have failed to enter into the Contract, Contractor shall forfeit the amount of its Bid security accompanying Contractor's Bid, and City may award the Contract to the next lowest responsive responsible Bidder.

c. NO PAYMENTS WILL BE MADE, NOR WILL CITY ACCEPT CHANGE ORDER REQUESTS UNTIL THE ABOVE-REQUIRED INFORMATION IS SUBMITTED AND APPROVED. ALTERNATIVELY, CITY MAY DECLARE THE BID NON-RESPONSIVE.

d. Contractor shall submit the Escrow Bid Documents, in person by an authorized representative of the Contractor, to:

Kevin Keating – Project Manager

PALM SUBSTATION 60kV EXTENSION PROJECT
Silicon Valley Power
1500 Warburton Avenue
Santa Clara, California 95050

**2. Scope of Escrow Bid Documents.**

a. Within the time period specified in Document 00200 - Instructions to Bidders and Document 00510 – Notice of Award, Contractor shall submit one copy of all documentary information received or generated by Contractor in preparation of Bid prices for the Contract Documents, as specified in paragraphs 5 and 6 of this Document 00670. This material is referred to in this Document 00670 as the "Escrow Bid Documents." Contractor's Escrow Bid Documents will be held in escrow as provided in this Document 00670.

b. Contractor represents and agrees, as a condition of award of the Contract, that the Escrow Bid Documents constitute all written information used in the preparation of its Bid, and that no other written Bid preparation information shall be considered in resolving disputes or claims or may be considered in legal proceedings. Contractor also agrees that nothing in the Escrow Bid Documents shall change or modify the terms or conditions of the Contract Documents. Contractor is advised that the Escrow Bid Documents will only be used as a guide in the resolution of disputes and claims.

3. **Ownership of Escrow Bid Documents.**

   a. The Escrow Bid Documents are, and shall always remain, the property of Contractor, subject to joint review by City and Contractor, as provided in this Document 00670.

   b. City stipulates and expressly acknowledges that the Escrow Bid Documents constitute trade secrets. This acknowledgement is based on City's express understanding that the information contained in the Escrow Bid Documents is not known outside Contractor's business, is known only to a limited extent and only by a limited number of Contractor's employees, is safeguarded while in Contractor's possession, is extremely valuable to Contractor and could be extremely valuable to Contractor's competitors by virtue of it reflecting Contractor's contemplated construction techniques. City further acknowledges that the Escrow Bid Documents and the information contained in them are made available to City only because such action is an express pre-requisite to award of the Contract. City agrees to safeguard the Escrow Bid Documents, and all information contained in them, against disclosure to the fullest extent permitted by law, consistent with paragraph 4 of this Document 00670.

4. **Escrow Bid Documents** may be used in the determination of price adjustments and change orders and in the settlement of disputes and claims. If used in legal proceedings, Escrow Bid Documents shall be subject to an appropriate protective order limiting their disclosure.

5. **Format and Contents of Escrow Bid Documents.**

   a. Contractor may submit Escrow Bid Documents in their usual cost-estimating format; a standard format is not required. Contractor shall prepare and submit the Escrow Bid Documents in English.

   b. City requires Contractor to itemize clearly in the Escrow Bid Documents the estimated costs of performing the work of each Bid item contained in Contractor's Bid. Contractor shall separate Bid items into sub-items as required to present a detailed cost estimate and allow a detailed cost review. The Escrow Bid Documents shall include all Subcontractor bids or quotes, supplier bids or quotes, quantity take-offs, crews, equipment, calculations of rates of production and progress, copies of quotes from Subcontractors and suppliers, and memoranda, narratives, add/deduct sheets, and all other information used by Contractor to arrive at the prices contained in the Bid. Escrow Bid Documents shall include costs of scheduled maintenance, depreciation, fleet rental expense discounts and incentives, and similar cost adjustments if used by Contractor to calculate its Bid prices. Estimated costs shall be broken down into Contractor's usual estimate categories such as direct labor, repair labor, equipment ownership and operation, expendable materials, permanent materials and subcontract costs as appropriate. Plant and equipment and indirect costs should be detailed in Contractor's usual format. Contractor shall identify its allocation of indirect costs, contingencies, markup and other items to each Bid item.

   c. Contractor shall identify all costs. For Bid items amounting to less than $10,000, Contractor may estimate costs without a detailed cost estimate, provided that Contractor includes applicable labor, equipment, materials and subcontracts, and allocates applicable indirect costs, contingencies and markup.

d. Bid documents provided by City should not be included in the Escrow Bid Documents unless needed to comply with these requirements.

**6. Submittal of Escrow Bid Documents.**

a. Contractor shall submit the Escrow Bid Documents within the time period set forth in and Document 00510 – Notice of Award. The container shall be clearly marked on the outside with Contractor's name, date of submittal, project name and the words "Escrow Bid Documents - Open only in the presence of Authorized Representatives of both City and Contractor." City will review the Escrow Bid Documents for initial compliance. City has three Days after receipt of Bidder's Escrow Bid Documents to demand additional information.

b. By submitting Escrow Bid Documents, Contractor represents that the material in the Escrow Bid Documents constitutes all the documentary information used in preparation of the Bid and that Contractor has personally examined the contents of the Escrow Bid Documents container and has found that the documents in the container are complete. Contractor agrees that it will not introduce or rely on any other documents to prove how it prepared its Bid.

c. If Contractor's proposal is based upon subcontracting any part of the Work, each Subcontractor whose total subcontract price exceeds five percent of the total Contract Sum proposed by Contractor, shall provide separate Escrow Documents to be included with those of Contractor. Such documents shall be opened and examined in the same manner and at the same time as the examination described above for Contractor.

d. If Contractor wishes to subcontract any portion of the Work after award, City retains the right to require Contractor to submit Escrow Documents for the Subcontractor before approval of the subcontract.

**7. Storage, Examination, and Final Disposition of Escrow Bid Documents.**

a. The Escrow Bid Documents will be placed in escrow until Final Completion of Work on the Project, in a mutually agreeable institution. Contractor shall pay the cost of storage for the Escrow Bid Documents until that time. The storage facilities shall be the appropriate size for all the Escrow Bid Documents and located conveniently to both City's and, to the extent reasonably possible, Contractor's offices, but in no event outside the County of Santa Clara.

b. Both City and Contractor shall examine the Escrow Bid Documents, at any time deemed necessary by either City or Contractor, to assist in the negotiation of price adjustments and change orders or the settlement of disputes and claims. Examination of the Escrow Bid Documents is subject to the following conditions:

i. As trade secrets, the Escrow Bid Documents are proprietary and confidential under paragraph 3.b. of this Document 00670.

ii. City and Contractor (and any Subcontractor, to the extent Escrow Bid Documents are required by a Subcontractor) shall each designate in writing to the other party(s) at least seven Days prior to any examination, representatives who are authorized to examine the Escrow Bid Documents.

Except as otherwise provided in a court order, no other persons shall have access to the Escrow Documents.

iii. Except as otherwise provided in a court order, access to the documents may take place only in the presence of duly designated representatives of both City and Contractor. If Contractor fails to designate a representative or appear for joint examination on seven Days' notice, then City's representative may examine the Escrow Bid Documents upon an additional three Days' notice.

c. Following Final Completion of Work on the Project and achievement of final settlement, City shall direct the escrow agent holding the Escrow Bid Documents in writing to return those documents to Contractor.

END OF DOCUMENT

# DOCUMENT 00680

# ESCROW AGREEMENT

# FOR SECURITY DEPOSITS IN LIEU OF RETENTION

P.C.C. §22300

THIS ESCROW AGREEMENT ("Escrow Agreement") is made and entered into this _____ day of _____, 200___, by and between the CITY OF SANTA CLARA, a chartered Municipal Corporation of the State of California (hereinafter "City"), whose address is 1500 Warburton Avenue, Santa Clara, California 95050; _____ ("Contractor"), whose place of business is located at _____; and [City, as escrow agent ] OR [_____], a state or federally chartered bank in the State of California, whose place of business is located at _____ ("Escrow Agent").

For consideration hereinafter set forth, City, Contractor and Escrow Agent agree as follows: its

1. Pursuant to Section 22300 of Public Contract Code of the State of California, Contractor has the option to deposit securities with Escrow Agent as a substitute for retention earnings required to be withheld by City pursuant to Contract Number 2003A entered into between City and Contractor for PALM SUBSTATION 60kV EXTENSION PROJECT in the amount of [$_____] dated [_____ ___, 200__] (the "Contract"). Alternatively, on written request of Contractor, City shall make payments of the retention earnings directly to Escrow Agent. When Contractor deposits the securities as a substitute for Contract earnings, Escrow Agent shall notify City within ten Days of the deposit. The market value of the securities at the time of substitution shall be at least equal to the cash amount then required to be withheld as retention under terms of Contract between City and Contractor.

   Securities shall be held in name of _____, and shall designate Contractor as the beneficial owner.

2. City shall make progress payments to Contractor for those funds which otherwise would be withheld from progress payments pursuant to Contract provisions, provided that Escrow Agent holds securities in form and amount specified in paragraph 1 of this Document 00680.

3. When City makes payment(s) of retention earned directly to Escrow Agent, Escrow Agent shall hold said payment(s) for the benefit of Contractor until the time that the escrow created under this Escrow Agreement is terminated. Contractor may direct the investment of the payments into securities. All terms and conditions of this Escrow Agreement and the rights and responsibilities of the parties shall be equally applicable and binding when City pays Escrow Agent directly.

4. Contractor shall be responsible for paying all fees for the expenses incurred by Escrow Agent in administering the Escrow Account, and all expenses of City. Such expenses and payment terms shall be determined by City, Contractor, and Escrow Agent.

5. Interest earned on securities or money market accounts held in escrow and all interest earned on that interest shall be for sole account of Contractor and shall be subject to withdrawal by Contractor at any time and from time to time without notice to City.

6. Contractor shall have the right to withdraw all or any part of the principal in the Escrow Account only by written notice to Escrow Agent accompanied by written authorization from City to Escrow Agent that City consents to withdrawal of amount sought to be withdrawn by Contractor.
7. City shall have the right to draw upon the securities in event of default by Contractor. Upon seven Days written notice to Escrow Agent from City of the default, Escrow Agent shall immediately convert the securities to cash and shall distribute the cash as instructed by City.
8. Upon receipt of written notification from City certifying that the Contract is final and complete, and that Contractor has complied with all requirements and procedures applicable to the Contract, Escrow Agent shall release to Contractor all securities and interest on deposit less escrow fees and charges of the Escrow Account. The escrow shall be closed immediately upon disbursement of all moneys and securities on deposit and payments of fees and charges.
9. Escrow Agent shall rely on written notifications from City and Contractor pursuant to paragraphs 5 through 8, inclusive, of this Document 00680 and City and Contractor shall hold Escrow Agent harmless from Escrow Agent's release and disbursement of securities and interest as set forth.
10. Names of persons who are authorized to give written notice or to receive written notice on behalf of City and on behalf of Contractor in connection with the foregoing, and exemplars of their respective are as follows:

On behalf of City:

_____
Title

_____
Name

_____
Signature

_____
Address

_____
City/State/Zip

On behalf of Contractor:

_____
Title

_____
Name

_____
Signature

_____
Address

_____
City/State/Zip

On behalf of Escrow Agent:

_____
Title

_____
Name

_____
Signature

_____
Address

_____
City/State/Zip

At the time the Escrow Account is opened, City and Contractor shall deliver to Escrow Agent a fully executed counterpart of this Document 00680.

IN WITNESS WHEREOF, the parties have executed this Escrow Agreement by their proper officers on the date first set forth above.

| City | Contractor |
|---|---|
| _____ | _____ |
| Title | Title |
| _____ | _____ |
| Name | Name |
| _____ | _____ |
| Signature | Signature |
| _____ | _____ |
| Address | Address |
| _____ | _____ |
| City/State/Zip | City/State/Zip |

On behalf of Escrow Agent:

_____
Title

_____
Name

_____
Signature

_____
Address

_____
City/State/Zip

REVIEWED AS TO FORM:

_____
City Attorney

_____
Date

END OF DOCUMENT

THIS PAGE

INTENTIONALLY

LEFT BLANK

# DOCUMENT 00700
# GENERAL CONDITIONS

## TABLE OF CONTENTS


1. GENERAL ..... 1
   - 1.1 Documents ..... 1
   - 1.2 Exercise Of Contract Responsibilities ..... 1
   - 1.3 Defined Terms ..... 1

2. BIDDING ..... 1
   - 2.1 Investigation Prior To Bidding ..... 1
   - 2.2 Subcontractors ..... 2

3. CONTRACT AWARD AND COMMENCEMENT OF THE WORK ..... 3
   - 3.1 Award Of Contract ..... 3
   - 3.2 Commencement Of Work ..... 3

4. BONDS AND INSURANCE ..... 3
   - 4.1 Bonds ..... 3
   - 4.2 Insurance ..... 3

5. DRAWINGS AND SPECIFICATIONS ..... 4
   - 5.1 Intent ..... 4
   - 5.2 Drawing Details ..... 4
   - 5.3 Interpretation Of Drawings And Specifications ..... 4
   - 5.4 Checking Of Drawings ..... 5
   - 5.5 Standards To Apply Where Specifications Are Not Furnished ..... 5
   - 5.6 Deviation from Specifications and Drawings ..... 5
   - 5.7 Precedence Of Documents ..... 6
   - 5.8 Ownership And Use Of Drawings, Specifications And Contract Documents ..... 6

6. CONSTRUCTION BY CITY OR BY SEPARATE CONTRACTORS ..... 6
   - 6.1 City's Right To Perform Construction And To Award Separate Contracts ..... 6
   - 6.2 Mutual Responsibility ..... 7
   - 6.3 City Authority Over Coordination ..... 7

7. CITY AND PAYMENT ..... 8
   - 7.1 City's Representative(s) ..... 8
   - 7.2 Means And Methods Of Construction ..... 8
   - 7.3 Receipt And Processing Of Applications For Payment ..... 8

8. CONTROL OF THE WORK ..... 9
   - 8.1 Supervision Of Work By Contractor ..... 9
   - 8.2 Observation Of Work By City ..... 9
   - 8.3 Access To Work ..... 10
   - 8.4 Existing Utilities ..... 10
   - 8.5 Underground Facilities ..... 11

9. WARRANTY, GUARANTY, AND INSPECTION OF WORK ..... 13
   - 9.1 Warranty And Guaranty ..... 13
   - 9.2 Inspection Of Work ..... 14

9.3 Correction Of Defective Work ..... 15
9.4 Acceptance And Correction Of Defective Work By City ..... 16
9.5 Rights Upon Inspection Or Correction ..... 17
9.6 Samples And Tests Of Materials And Work ..... 17
9.7 Proof Of Compliance Of Contract Provisions ..... 17
9.8 Acceptance ..... 17

10. CONTRACTOR'S ORGANIZATION AND EQUIPMENT ..... 17
10.1 Contractor's Legal Address ..... 17
10.2 Contractor's Office At The Work Site ..... 18
10.3 Contractor's Superintendents Or Forepersons ..... 18
10.4 Proficiency In English ..... 18
10.5 Contractor's And Subcontractors' Employees ..... 18
10.6 Contractor To Supply Sufficient Workers And Materials ..... 18
10.7 Contractor To List Trades Working ..... 19
10.8 Contractor's Use Of The Site ..... 19

11. PROSECUTION AND PROGRESS OF THE WORK ..... 19
11.1 Schedules And Examinations Of Contract Documents ..... 19
11.2 Cost Data ..... 21

12. CLAIMS BY CONTRACTOR ..... 22
12.1 General ..... 22
12.2 Procedure ..... 23
12.3 Claim Format ..... 24
12.4 Exclusive Remedy ..... 24
12.5 Mediation ..... 25
12.6 Subcontractor Claims ..... 25

13. LEGAL AND MISCELLANEOUS ..... 25
13.1 Laws And Regulations ..... 25
13.2 Permits And Taxes ..... 25
13.3 Responsibility Of Contractor And Indemnification ..... 26
13.4 Concealed Or Unknown Conditions ..... 27
13.5 Notice Of Hazardous Waste Or Materials Conditions ..... 28
13.6 Suspension Of Work ..... 29
13.7 Termination Of Contract For Cause ..... 29
13.8 Termination Of Contract For Convenience ..... 31
13.9 Contingent Assignment Of Subcontracts ..... 34
13.10 Remedies and Contract Integration ..... 34
13.11 Patents ..... 35
13.12 Substitution For Patented And Specified Articles ..... 35
13.13 Interest Of Public Officers ..... 36
13.14 Limit Of Liability ..... 36
13.15 Severability ..... 36

14. MODIFICATIONS OF CONTRACT DOCUMENTS ..... 36
14.1 Alterations, Modifications And Force Account Work ..... 36

15. TIME ALLOWANCES ..... 38
15.1 Time Allowances For Performance Of Contract Documents ..... 38
15.2 Entitlement to Change Of Contract Time ..... 38

15.3 Notice Of Delay ..... 39
15.4 Time Extensions and/or Damages Entitlements For Delays ..... 40
15.5 Liquidated Damages ..... 40

16. WORKING CONDITIONS AND PREVAILING WAGES ..... 41
16.1 Use Of Site/Sanitary Rules ..... 41
16.2 Protection Of Work, Persons, Property and Operations ..... 42
16.3 Responsibility For Safety And Health ..... 43
16.4 Emergencies ..... 43
16.5 Use Of Roadways And Walkways ..... 43
16.6 Nondiscrimination ..... 43
16.7 Prevailing Wages ..... 44
16.8 Environmental Controls ..... 44
16.9 Shoring Safety Plan ..... 45

THIS PAGE

INTENTIONALLY

LEFT BLANK

# DOCUMENT 00700

# GENERAL CONDITIONS

## 1. GENERAL

### 1.1 Documents

Contract Documents are complementary; what is called for by one is as binding as if called for by all. Contract Documents shall not be construed to create a contractual relationship of any kind between (1) Engineer or any City's Representative and Contractor; (2) City and/or its representatives and (except as provided in paragraph 13.9 below) a Subcontractor, sub-Subcontractor, or supplier of any Project labor, materials, or equipment; or (3) between any persons or entities other than City and Contractor. City shall be deemed to be an intended third-party beneficiary of each agreement referenced in clause (2) above, and each such agreement shall so provide. Contractor is fully responsible for Contractor's own acts and omissions. Contractor is responsible for all acts and omissions of its Subcontractors, suppliers, and other persons and organizations performing or furnishing any of the Work, labor, materials, or equipment under a direct or indirect contract with Contractor.

### 1.2 Exercise Of Contract Responsibilities

In exercising its responsibilities and authorities under the Contract Documents, City does not assume any duties or responsibilities to any Subcontractor or supplier and does not assume any duty of care to Contractor, Contractor's Subcontractors or suppliers. Except as expressly set forth in the Contract Documents, in exercising their respective responsibilities and authorities under the Contract Documents, neither Engineer nor any City's Representative assume any duties or responsibilities to any Subcontractor, sub-Subcontractor or supplier nor assume any duty of care to Contractor or any Subcontractor, sub-Subcontractor or suppliers.

### 1.3 Defined Terms

All abbreviations and definitions of terms used and not otherwise defined in this Document 00700 are set forth in Section 01420 (References and Definitions). This Document 00700 subdivides at first level into Articles, and then into paragraphs.

## 2. BIDDING

### 2.1 Investigation Prior To Bidding

2.1.A. Prior to bidding, Bidders shall perform the work, investigations, research and analysis required by Article 5 of Document 00520 (Agreement). Under the Contract Documents, Contractor is charged with all information and knowledge that a reasonable Bidder would ascertain from having performed the required work, investigations, research, and analysis. Bid prices shall include entire cost of all "incidental work" to complete of the Work, as that term is defined in Article 5 of this Document 00700.

2.1.B. Conditions Shown on Contract Documents: Information as to underground conditions, as-built conditions, or other conditions or obstructions indicated in the Contract Documents, *e.g.*, on Drawings or in Specifications, has been obtained with reasonable care, and has been recorded in good faith. City

warrants, and Contractor may rely on, the accuracy of only limited types of information as discussed below.

1. Aboveground and as-built conditions: There is no express or implied warranty and no express or implied representation that any information as to aboveground conditions or as-built conditions indicated in the Contract Documents is correctly shown, or indicated, or complete. As a condition to bidding, Contractor shall verify by independent investigation all aboveground and as-built conditions. In submitting its Bid, Contractor shall rely on the results of its own independent investigation and shall not rely on City-supplied information regarding aboveground conditions and as-built conditions.

2. Subsurface conditions: Contractor may rely only upon the general accuracy of actual reported depths, actual reported character of materials, actual reported soil types, actual reported water conditions, or actual obstructions shown or indicated in the Contract Documents. City is not responsible for (1) the completeness of any subsurface condition information for bidding or construction, (2) Contractor's conclusions or opinions drawn from any subsurface condition information, or (3) subsurface conditions that are not specifically shown. (For example, City is not responsible for soil conditions in areas contiguous to areas where a subsurface condition is shown.)

3. Conditions Shown in Reports and Drawings Supplied for Informational Purposes: Reference is made to Document 00320 (Geotechnical Data and Existing Conditions) for identification of geotechnical reports, "as built" information, and other drawings or other documents describing physical conditions in or relating to existing surface or subsurface conditions or structures at or contiguous to the Site. These materials are not Contract Documents and, except for any "technical data" regarding subsurface conditions specifically identified in Document 00320 (Geotechnical Data and Existing Conditions), and "Underground Facilities" data, as limited in Document 00320 (Geotechnical Data and Existing Conditions), Contractor shall not in any manner rely on the information in these materials. Subject to the foregoing, Contractor shall make its own independent investigation of all conditions affecting the Work and must not rely on information provided by City.

**2.2 Subcontractors**

2.2.A. Consistent with Public Contract Code Sections 4101 *et seq.*, Contractor shall not substitute any other person or firm in place of any Subcontractor listed in the Bid. Subcontractors shall not assign or transfer their subcontracts or permit them to be performed by any other contractor without City's written approval. At City's request, Contractor shall provide City with a complete copy of all executed subcontracts or final commercial agreements with Subcontractors and/or suppliers.

2.2.B. Subcontract agreements shall preserve and protect the rights of City under the Contract Documents so that subcontracting will not prejudice such rights. To the extent of the Work to be performed by a Subcontractor, Contractor shall require the Subcontractor's written agreement (1) to be bound to the terms of Contract Documents and (2) to assume vis-à-vis Contractor all the obligations and responsibilities that Contractor assumes toward City under the Contract

Documents. (These agreements include for example, and not by way of limitation, all warranties, claims procedures and rules governing submittals of all types to which Contractor is subject under the Contract Documents.)

2.2.C. Contractor shall provide for the assignment to City of all rights any Subcontractor may have against any manufacturer, supplier, or distributor for breach of warranties and guarantees relating to the Work performed by the Subcontractor under the Contract Documents.

## 3. CONTRACT AWARD AND COMMENCEMENT OF THE WORK

### 3.1 Award Of Contract

City will make the Award of Contract by issuing a Notice of Award. As a condition to City signing Document 00520 (Agreement), however, Contractor shall deliver to City the executed agreements, forms, bonds and insurance documents required by Document 00200 (Instructions to Bidders) in the required quantities and within the required times.

### 3.2 Commencement Of Work

The Contract Time will commence to run on the date indicated in the Notice to Proceed. See also paragraph 15.1.B of this Document 00700. City may give a Notice to Proceed at any time within 30 Days after the Notice of Award. Contractor shall not do any Work at the Site prior to the date on which the Contract Time commences to run.

## 4. BONDS AND INSURANCE

### 4.1 Bonds

4.1.A. At or before the date indicated in Document 00200 (Instructions to Bidders), Contractor shall file with City the following bonds:

1. Corporate surety bond, in the form of Document 00610 (Construction Performance Bond), in the penal sum of 100% of the Contractor's Bid as accepted, to guarantee faithful performance of the Work; and
2. Corporate surety bond, in the form of Document 00620 (Construction Labor and Material Payment Bond), in the penal sum of 100% of the Contractor's Bid as accepted, to guarantee payment of wages for services engaged and of bills contracted for materials, supplies, and equipment used in performance of Contract Documents.

4.1.B. Sureties shall be satisfactory to City. Corporate sureties on these bonds and on bonds accompanying Bids shall be duly licensed to do business in the State of California and shall have an A.M. Best Company financial rating of A or better.

### 4.2 Insurance

See Document 00821 (Insurance), incorporated herein by this reference.

## 5. DRAWINGS AND SPECIFICATIONS

### 5.1 Intent

5.1.A. Drawings and Specifications are intended to describe a functionally complete and operable Project (and all parts thereof) to be constructed in accordance with the requirements of Contract Documents. Contractor shall perform any work, provide services and furnish any materials or equipment that may reasonably be inferred from the requirements of Contract Documents or from prevailing custom or trade usage as being required to produce this intended result. Contractor shall interpret words or phrases used to describe work (including services), materials or equipment, that have well-known technical or construction industry or trade meaning in accordance with that meaning. Drawings' intent specifically includes the intent to depict construction that complies with all applicable laws, codes and standards.

5.1.B. As part of the "Work," Contractor shall provide all labor, materials, equipment, machinery, tools, facilities, services, employee training and testing, hoisting facilities, shop drawings, storage, testing, security, transportation, disposal, the securing of all necessary or required field dimensions, the cutting or patching of existing materials, notices, permits, documents, reports, agreements and any other items required or necessary to timely and fully complete Work described and the results intended by Contract Documents and, in particular, Drawings and Specifications. Divisions and Specification Sections and the identification on any Drawings shall not control Contractor in dividing Work among Subcontractors or suppliers or delineating the Work to be performed by any specific trade.

5.1.C. Contractor shall perform reasonably implied parts of Work as "incidental work" although absent from Drawings and Specifications. Incidental work includes any work not shown on Drawings or described in Specifications that is necessary or normally or customarily required as a part of the Work shown on Drawings or described in Specifications. Incidental work includes any Work necessary or required to make each installation satisfactory, legally operable, functional, and consistent with the intent of Drawings and Specifications or the requirements of Contract Documents including required tasks to be performed under Division 1 of Specifications. Contractor shall perform incidental work without extra cost to City. Incidental work shall be treated as if fully described in Specifications and shown on Drawings, and the expense of incidental work shall be included in price Bid and Contract Sum.

### 5.2 Drawing Details

A typical or representative detail on Drawings shall constitute the standard for workmanship and material throughout corresponding parts of Work. Where necessary, and where reasonably inferable from Drawings, Contractor shall adapt such representative detail for application to such corresponding parts of Work. The details of such adaptation shall be subject to prior approval by City. Repetitive features shown in outline on Drawings shall be in exact accordance with corresponding features completely shown.

### 5.3 Interpretation Of Drawings And Specifications

Should any discrepancy appear or any misunderstanding arise as to the import of anything contained in Drawings and Specifications, or should Contractor have any

questions or requests relating to Drawings or Specifications, Contractor shall refer the matter to City, in writing. City will issue with reasonable promptness written responses, clarifications or interpretations as City may determine necessary, which shall be consistent with the intent of and be reasonably inferable from Contract Documents. Such written clarifications or interpretations shall be binding upon Contractor. If Contractor believes that a written response, clarification or interpretation justifies an adjustment in the Contract Sum or Contract Time, Contractor shall give City prompt written notice as provided in Section 01250 (Modification Procedures). If the parties are unable to agree to the amount or extent of the adjustment, if any, then Contractor shall perform the Work in conformance with City's response, clarification, or interpretation and may make a written claim for the adjustment as provided in Article 12 of this Document 00700.

### 5.4 Checking Of Drawings

Before undertaking each part of Work, Contractor shall carefully study and compare Contract Documents and check and verify pertinent figures shown in the Contract Documents and all applicable field measurements. Contractor shall be responsible for any errors that might have been avoided by such comparison. Figures shown on Drawings shall be followed; Contractor shall not scale measurements. Contractor shall promptly report to City, in writing, any conflict, error, ambiguity or discrepancy that Contractor may discover. Contractor shall obtain a written interpretation or clarification from City before proceeding with any Work affected thereby. Contractor shall provide City with a follow-up correspondence every ten (10) days until it receives a satisfactory interpretation or clarification.

### 5.5 Standards To Apply Where Specifications Are Not Furnished

The following general specifications shall apply wherever in the Specifications, or in any directions given by City in accordance with or supplementing Specifications, it is provided that Contractor shall furnish materials or manufactured articles or shall do work for which no detailed specifications are shown. Materials or manufactured articles shall be of the best grade, in quality and workmanship, obtainable in the market from firms of established good reputation. If not ordinarily carried in stock, the materials or manufactured articles shall conform to industry standards for first-class materials or articles of the kind required, with due consideration of the use to which they are to be put. Work shall conform to the usual standards or codes, such as those cited in Section 01420 (References and Definitions), for first-class work of the kind required. Contractor shall specify in writing to City the materials to be used or Work to be performed under this paragraph 5.5 ten (10) Business Days prior to furnishing such materials or performing such Work.

### 5.6 Deviation from Specifications and Drawings

5.6.A. Contractor shall perform Work in accordance with Drawings and Specifications. Contractor may deviate from Drawings or the dimensions given in the Drawings, and may deviate from the Specifications, only upon City's advance written approval of the proposed deviation.

5.6.B. City may order that locations, lines and grades for Work vary from those shown on Drawings. Changes may be made in locations, lines or grades for Work under any item of Contract Documents. No payment in addition to unit price fixed in the Contract Documents for Work under respective items will be allowed on account of variations from Drawings in unit price items. In lump sum

contracts, or where there are no unit price items covering Work affected by variations of locations, lines or grades, all changes in the Contract Documents will be made as set forth in Article 14 of this Document 00700.

### 5.7 Precedence Of Documents

5.7.A. In the case of discrepancy or ambiguity in the Contract Documents, the following order of precedence shall prevail:

1. Modifications in inverse chronological order (i.e., most recent first), and in the same order as specific portions they are modifying;
2. Document 00520 (Agreement), and terms and conditions referenced therein;
3. Document 00800 (Supplementary Conditions);
4. Document 00700 (General Conditions);
5. Division 1 Specifications;
6. Division 2 through 16 Specifications;
7. Drawings;
8. Written numbers over figures, unless obviously incorrect;
9. Figured dimensions over scaled dimensions;
10. Large-scale drawings over small-scale drawings.

5.7.B. Any conflict between Drawings and Division 2 through 16 Specifications will be resolved in favor of the document of the latest date (i.e., the most recent document), and if the dates are the same or not determinable, then in favor of Specifications.

5.7.C. Any conflict between a bill or list of materials shown in the Contract Documents and the actual quantities required to complete Work required by Contract Documents, will be resolved in favor of the actual quantities.

5.7.D. In the event the Specifications include divisions above Division 16 (e.g., Division 17 and above), then such divisions shall be included within the Contract Documents unless identified otherwise.

### 5.8 Ownership And Use Of Drawings, Specifications And Contract Documents

Drawings, Specifications and other Contract Documents were prepared for use for Work of Contract Documents only. No part of Contract Documents shall be used for any other construction or for any other purpose except with the written consent of City. Any unauthorized use of Contract Documents is prohibited and at the sole liability of the user.

## 6. CONSTRUCTION BY CITY OR BY SEPARATE CONTRACTORS

### 6.1 City's Right To Perform Construction And To Award Separate Contracts

City may perform with its own forces, construction or operations related to the Project. City may also award separate contracts in connection with other portions of the Project or other construction or operations, on the Site or areas contiguous to the Site, under conditions similar to these Contract Documents, or may have utility owners perform other work. When separate contracts are awarded for different portions of the Project or

other construction or operations on the Site, the term "Contractor" in these Contract Documents shall mean the Contractor herein.

**6.2 Mutual Responsibility**

6.2.A. Contractor shall afford all other contractors, utility owners and City (if City is performing work with its own forces), proper and safe access to the Site, and reasonable opportunity for the installation and storage of their materials. Contractor shall ensure that the execution of its Work properly connects and coordinates with others' work, and shall cooperate with them to facilitate the progress of the Work.

6.2.B. Contractor shall coordinate its Work with the work of other separate contractors, City, and utility owners. Contractor shall hold coordination meetings with other contractors, City and its representatives, and utility owners as required by Section 01315 (Project Meetings).

6.2.C. Unless otherwise provided in the Contract Documents, Contractor shall do all cutting, fitting and patching of the Work that may be required to make its several parts come together properly and integrate with such other work. Contractor shall not endanger any work of other separate contractors, City or utility owners by cutting, excavating or otherwise altering their work and will only cut or alter their work with the written consent of City and the others whose work will be affected.

6.2.D. Contractor's duties and responsibilities under paragraph of this Document 00700 are for the benefit of City and also for the benefit of such other contractors and utility owners working at the Site to the extent that there are comparable provisions for the benefit of Contractor in the direct contracts between City and such other contractors and utility owners.

6.2.E. To the extent that any part of Contractor's Work is to interface with work performed or installed by other contractors or utility owners, Contractor shall inspect and measure the in-place work. Contractor shall promptly report to City in writing any defect in in-place work that will impede or increase the cost of Contractor's interface unless corrected. City will require the Contractor responsible for the Defective Work to make corrections so as to conform to its contract requirements, or, if the defect is the result of an error or omission in the Contract Documents, issue a Change Order. If Contractor fails to measure, inspect and/or report to City in writing defects that are reasonably discoverable, Contractor shall bear all costs of accomplishing the interface acceptable to City. This provision shall be included in any and all other contracts or subcontracts for Work to be performed where such a conflict could exist.

**6.3 City Authority Over Coordination**

6.3.A. City will have authority over coordination of the activities of multiple contractors in cases where City performs work with its own forces or contracts with others for the performance of other work on the Project, or utilities work on the Site. City may at any time and in its sole discretion, designate a person or entity other than City to have authority over the coordination of the activities among the various contractors. City's authority with respect to coordination of the activities of multiple contractors and utility owners shall not relieve Contractor of its obligation to other contractors and utility owners to coordinate its Work with other contractors and utility owners as specified in paragraph 6.2 of this

Document 00700. Contractor shall promptly notify City in writing when another contractor on the Project fails to coordinate its work with the Work of Contract Documents.

6.3.B. Contractor shall suspend any part of the Work or carry on the same in such manner as directed by City when such suspension or prosecution is necessary to facilitate the work of other contractors or workers. No damages or claims by Contractor will be allowed if the suspension or Work change is due in whole or in part to Contractor's failure to perform its obligation to coordinate its Work with other contractors and utility owners. Damages or claims will be allowed only to the extent of fault by City if the suspension or Work change is due in whole or in part to another contractor's failure to coordinate its work with Contractor, other contractors, and utility owners. City reserves the right to back charge Contractor for any damages or claims incurred by other contractors as a result of Contractor's failure to perform its obligations to coordinate with other contractors and utility owners. City may deposit the funds retained with a Court of competent jurisdiction pursuant to applicable interpleader procedures and Contractor releases City of further liability regarding such funds.

## 7. CITY AND PAYMENT

### 7.1 City's Representative(s)

City's Representative(s) will have limited authority to act on behalf of City as set forth in the Contract Documents. Except as otherwise provided in these Contract Documents or subsequently identified in writing by City, City will issue all communications to Contractor through City's Representative and Contractor shall issue all communications to City through City's Representative in a written document delivered to City. Should any direct communications between Contractor and City's consultants, architects or engineers not identified in Article 2 of Document 00520 (Agreement) occur during field visits or by telephone, Contractor shall immediately confirm them in a written document copied to City.

### 7.2 Means And Methods Of Construction

Subject to those rights specifically reserved in the Contract Documents, City will not supervise, or direct, or have control over, or be responsible for, Contractor's means, methods, techniques, sequences or procedures of construction, or the safety precautions and programs incident thereto, or Contractor's failure to comply with laws and regulations applicable to the furnishing or performance of Work. City will not be responsible for Contractor's failure to perform or furnish the Work in accordance with Contract Documents.

### 7.3 Receipt And Processing Of Applications For Payment

As required by Section 01200 (Measurement and Payment), Contractor shall prepare the schedules, submit Applications for Payment and warrant title to all Work covered by each Application for Payment. City will review Contractor's Applications for Payment and make payment thereon, and Contractor shall make payments to Subcontractors, suppliers and others, as required by Section 01200 (Measurement and Payment).

## 8. CONTROL OF THE WORK

### 8.1 Supervision Of Work By Contractor

8.1.A. Contractor shall supervise, inspect, and direct Work competently and efficiently, devoting the attention and applying such personal skills and expertise as may be required and necessary to perform Work in accordance with Contract Documents. Contractor shall be solely responsible for and have control and charge of construction means, methods, techniques, sequences and procedures, safety precautions and programs in connection with the Work. Contractor shall be responsible to see that the completed Work complies accurately with Contract Documents.

8.1.B. Contractor shall keep on the Site at all times during Work progress a competent resident Superintendent, who shall not be replaced without City's express written consent. The Superintendent shall be Contractor's representative at the Site and shall have complete authority to act on behalf of Contractor. All communications to and from the Superintendent shall be as binding as if given to or by Contractor.

### 8.2 Observation Of Work By City

8.2.A. Work shall be performed under City's general observation and administration. Contractor shall comply with City's directions and instructions in accordance with the terms of Contract Documents, but nothing contained in these General Conditions shall be taken to relieve Contractor of any obligations or liabilities under the Contract Documents. City's failure to review or, upon review, failure to object to any aspect of Work reviewed, shall not be deemed a waiver or approval of any non-conforming aspect of Work.

8.2.B. City may engage an independent consultant or engineer (collectively for purposes of this paragraph 8.2, "Engineer") to assist in administering the Work. If so engaged, Engineer will advise and consult with City, but will have authority to act on behalf of City only to extent provided in the Contract Documents or as set forth in writing by City. Engineer will not be responsible for and will not have control or charge of construction means, methods, techniques, sequences or procedures, or for safety precautions and programs in connection with Work. Engineer will not be responsible for or have control over the acts or omissions of Contractor, Subcontractors or their agents or employees, or any other persons performing Work.

8.2.C. Engineer may review Contractor's submittals, such as Shop Drawings, Product Data, and Samples, but only for conformance with design concept of Work and with information given in the Contract Documents.

8.2.D. Engineer may visit the Site at intervals appropriate to stage of construction to become familiar generally with the progress and quality of Work and to determine in general if Work is proceeding in accordance with Contract Documents. Based on its observations, Engineer may recommend to City that it disapprove or reject Work that Engineer believes to be defective or will not produce a complete Project that conforms to Contract Documents or will prejudice the integrity of the design concept of the completed Project as a functioning whole as indicated by Contract Documents. City will also have authority to require special inspection or testing of Work, whether or not the Work is fabricated, installed or completed.

8.2.E. Engineer may conduct inspections to recommend to City the dates that Contractor has achieved Substantial Completion and Final Acceptance, and will receive and forward to City for review written warranties and related documents required by Contract Documents.

### 8.3 Access To Work

During performance of Work, City and its agents, consultants, and employees may at any time enter upon Work, shops or studios where any part of the Work may be in preparation, or factories where any materials for use in Work are being or are to be manufactured, and Contractor shall provide proper and safe facilities for this purpose, and shall make arrangements with manufacturers to facilitate inspection of their processes and products to such extent as City's interests may require. Other contractors performing work for City may also enter upon Work for all purposes required by their respective contracts. Subject to the rights reserved in the Contract Documents, Contractor shall have sole care, custody, and control of the Site and its Work areas.

### 8.4 Existing Utilities

Drawings may indicate above and below grade structures, drainage lines, storm drains, sewers, water, gas, electrical, chemical, hot water, and other similar items and utilities, and additional information may be on file at the regional notification center, "Underground Service Alert" ("USA"). Contractor shall locate these known existing installations before proceeding with trenching or other operations that may cause damage, shall maintain them in service where appropriate, and shall repair any damage to them caused by the Work, at no increase in Contract Sum. Additional utilities whose locations are unknown to City are suspected to exist. Contractor shall be alert to their existence; if they are encountered, Contractor shall immediately report to City for disposition of the same. In addition to reporting if any utility is damaged, Contractor shall take appropriate action as provided in this Document 00700. Additional compensation or extension of time on account of utilities not shown or otherwise brought to Contractor's attention, including reasonable action taken to protect or repair damage, shall be determined as provided in this Document 00700.

8.4.A. At no additional cost to City, Contractor shall incorporate into the Work main or trunk line utilities identified in the Contract Documents and other utilities or underground structures known or reasonably discernible and that will remain in service, including reasonable adjustments to the design location (including minor relocations) of the existing or new installations. Contractor shall take immediate action to restore any in service installations damaged by Contractor's operations. Should City determine that Contractor has not responded in a timely manner or not diligently pursued completion of the Work, City may restore service and deduct the costs of such action by City from the amounts due under the Contract.

8.4.B. Consistent with Government Code Section 4215, as between City and Contractor, City will be responsible for the timely removal, relocation, or protection of existing main or trunk line utility facilities located on the Site only if such utilities are not identified in the Contract Documents or Document 00320 (Geotechnical Data and Existing Conditions). City will compensate for the cost of locating and repairing damage not due to Contractor's failure to exercise reasonable care, removing and relocating such main or trunk line utility facilities not indicated in the Contract Documents or Document 00230 (Existing

Conditions) with reasonable accuracy, and equipment on the Project necessarily idled during such work.

8.4.C. Prior to performing Work at the Site, Contractor shall lay out the locations of known underground utilities that are to remain in service and other significant known underground installations. At no additional cost to City, prior to commencing other Work in proximity to such known underground utilities or installations that can be readily inferred from adjacent surface improvements, Contractor shall further locate, by carefully excavating with small equipment, potholing and principally by hand, such utilities or installations that are to remain and that are subject to damage. This obligation applies to all utilities (including, but not limited to, those referenced in paragraph 8.4.C of this Document 00700).

8.4.D. Nothing in this Document 00700 shall be deemed to require City to indicate the presence of existing service laterals or appurtenances whenever the presence of such utilities on the Site can be inferred by Contractor from the presence of an underground transmission main or other visible facilities, such as buildings, new asphalt, meters and junction boxes, on or adjacent to the Site. Contractor shall immediately secure all available information and notify City and utility, in writing, of its discovery, while performing Work under the Contract Documents, of any utility facilities not identified in the Drawings and Specifications.

**8.5 Underground Facilities**

8.5.A. Before commencing work of digging trenches or excavation, Contractor shall review all information available regarding subsurface conditions, including but not limited to information supplied in Document 00320 (Geotechnical Data and Existing Conditions), and subject to the terms and conditions of these documents, Contractor shall also comply with Government Code Sections 4216 to 4216.9, and in particular Section 4216.2 which provides, in part:

> "Except in an emergency, every person planning to conduct any excavation shall contact the appropriate regional notification center at least two working days, but no more than 14 calendar days, prior to commencing that excavation, if the excavation will be conducted in an area which is known, or reasonably should be known, to contain subsurface installations other than the underground facilities owned or operated by the excavator, and, if practical, the excavator shall delineate with white paint or other suitable markings the area to be excavated. The regional notification center shall provide an inquiry identification number to the person who contacts the center and shall notify any member, if known, who has a subsurface installation in the area of the proposed excavation."

8.5.B. Contractor shall contact USA, and schedule the Work to allow ample time for the center to notify its members and, if necessary, for any member to field locate and mark its facilities. Contractor is charged with knowledge of all subsurface conditions reflected in USA records. Prior to commencing excavation or trenching work, Contractor shall provide City with copies of all USA records secured by Contractor. Contractor shall advise City of any conflict between information provided in Document 00320 (Geotechnical Data and Existing Conditions), the Drawings and that provided by USA records. Contractor's excavation shall be subject to and comply with the Contract

Documents, including without limitation Paragraphs 2.1 and 8.4 of this Document 00700.

8.5.C. The cost of all of the following will be included in the Contract Sum and Contractor shall have full responsibility for (a) reviewing and checking all available information and data including, but not limited to, Document 00320 (Geotechnical Data and Existing Conditions) and information on file at USA; (b) locating all Underground Facilities shown or indicated in the Contract Documents, available information, or indicated by visual observation including, but not limited to, and by way of example only, engaging qualified locating services and all necessary backhoeing and potholing; (c) coordination of the Work with the owners of such Underground Facilities during construction; and (d) the safety and protection of all such Underground Facilities and repairing any damage thereto resulting from the Work.

8.5.D. If an Underground Facility is uncovered or revealed at or contiguous to the Site which was not shown or indicated in the materials supplied by City or in information on file at USA or is otherwise reasonably available to Contractor, then Contractor shall, promptly after becoming aware thereof and before further disturbing conditions affected thereby (and in no event later than seven (7) days), and prior to performing any Work in connection therewith (except in an emergency as required by Article 16 of this Document 00700), identify the owner of such Underground Facility and give written notice to that owner and to City. During such time, Contractor shall be responsible for the safety and protection of such Underground Facility.

8.5.E. Contractor shall be allowed an increase in the Contract Sum or an extension of the Contract Time, or both, to the extent that they are attributable to the existence of any Underground Facility that is owned and was built by City only where the Underground Facility:

1. Was not shown or indicated in the Contract Documents or in the information supplied pursuant to Document 00320 (Geotechnical Data and Existing Conditions) or in information on file at USA; and
2. Contractor did not know of it; and
3. Contractor could not reasonably have been expected to be aware of it or to have anticipated it from the information available. (For example, if surface conditions such as pavement repairs, valve covers, or other markings, indicate the presence of an Underground Facility, then an increase in the Contract Price or an extension of the Contract Time will not be due, even if the Underground Facility was not indicated in the Contract Documents, in the information supplied to Contractor pursuant to Document 00320 [Geotechnical Data and Existing Conditions], in information on file at USA, or otherwise reasonably available to Contractor.)

8.5.F. Contractor shall bear the risk that Underground Facilities not owned or built by City may differ in nature or locations shown in information made available by City pursuant to Document 00320 (Geotechnical Data and Existing Conditions), in information on file at USA, or otherwise reasonably available to Contractor. Underground Facilities are inherent in construction involving digging of trenches or other excavations and Contractor is to apply its skill and industry to verify the information available.

## 9. WARRANTY, GUARANTY, AND INSPECTION OF WORK

### 9.1 Warranty And Guaranty

9.1.A. General Representations and Warranties: Contractor represents and warrants that it is and will be at all times fully qualified and capable of performing every Phase of the Work and to complete Work in accordance with the terms of Contract Documents. Contractor warrants that all construction services shall be performed in accordance with generally accepted professional standards of good and sound construction practices and all requirements of Contract Documents. Contractor warrants that Work, including but not limited to each item of materials and equipment incorporated therein, shall be new, of suitable grade of its respective kind for its intended use, and free from defects in design, engineering, materials, construction and workmanship. Contractor warrants that Work shall conform in all respects with all applicable requirements of federal, state and local laws, applicable construction codes and standards, licenses, and permits, Drawings and Specifications and all descriptions set forth therein, and all other requirements of Contract Documents. Contractor shall not be responsible, however, for the negligence of others in the specification of specific equipment, materials, design parameters and means or methods of construction where that is specifically shown and expressly required by Contract Documents.

9.1.B. Extended Guarantees: Any guarantee exceeding one year provided by the supplier or manufacturer of any equipment or materials used in the Project shall be extended for such term. Contractor expressly agrees to act as co-guarantor of such equipment and materials and shall supply City with all warranty and guarantee documents relative to equipment and materials incorporated in the Project and guaranteed by their suppliers or manufacturers.

9.1.C. Environmental and Toxics Warranty: The covenants, warranties and representations contained in this paragraph 9.1.C are effective continuously during Contractor's Work on the Project and following cessation of labor for any reason including, but not limited to, Project completion. Contractor covenants, warrants and represents to City that:

1. To Contractor's knowledge after due inquiry, no lead or asbestos-containing materials were installed or discovered in the Project at any time during Contractor's construction thereof. If any lead or asbestos-containing materials were discovered, Contractor made immediate written disclosure to City.

2. To Contractor's knowledge after due inquiry, no electrical transformers, light fixtures with ballasts or other equipment containing PCBs are or were located on the Project at any time during Contractor's construction thereof.

3. To Contractor's knowledge after due inquiry, no storage tanks for gasoline or any other toxic substance are or were located on the Project at any time during Contractor's construction thereof. If any such materials were discovered, Contractor made immediate written disclosure to City.

4. Contractor's operations concerning the Project are and were not in violation of any applicable environmental federal, state, or local statute, law or regulation dealing with hazardous materials substances or toxic substances and no notice from any governmental body has been served upon

Contractor claiming any violation of any such law, ordinance, code or regulation, or requiring or calling attention to the need for any work, repairs, construction, alteration, or installation on or in connection with the Project in order to comply with any such laws, ordinances, codes, or regulations, with which Contractor has not complied. If there are any such notices with which Contractor has complied, Contractor shall provide City with copies thereof.

**9.2 Inspection Of Work**

9.2.A. All materials, equipment, and workmanship used in Work shall be subject to inspection and testing at all times during construction and/or manufacture in accordance with the terms of Contract Documents. Work and materials, and manufacture and preparation of materials, from beginning of construction until final completion and acceptance of Work, shall be subject to inspection and rejection by City, its agents, representatives or independent contractors retained by City to perform inspection services, or governmental agencies with jurisdictional interests. Contractor shall provide them proper and safe conditions for such access and advise them of Contractor's Site safety procedures and program so that they may comply therewith as applicable. Upon request or where specified, City shall be afforded access for inspection at the source of supply, manufacture or assembly of any item of material or equipment, with reasonable accommodations supplied for making such inspections.

9.2.B. Contractor shall give City timely notice of readiness of Work for all required inspections, tests or approvals, and shall cooperate with inspection and testing personnel to facilitate required inspections or tests.

9.2.C. If applicable laws or regulations of any public body having jurisdiction require any Work (or part thereof) specifically to be inspected, tested or approved by an employee or other representative of such public body, Contractor shall assume full responsibility for arranging and obtaining such inspections, tests or approvals, and furnish City with the required certificates of inspection, or approval. City will pay the cost of initial testing and Contractor shall pay all costs in connection with any follow-up or additional testing. Contractor shall also be responsible for arranging and obtaining and shall pay all costs in connection with any inspections, tests or approvals required for the acceptance of materials or equipment to be incorporated in the Work, or of materials, mix designs, or equipment submitted for approval prior to Contractor's purchase thereof for incorporation in the Work.

9.2.D. If Contractor covers any Work, or the work of others, prior to any required inspection, test or approval without written approval of City, Contractor shall uncover the Work at City's request. Contractor shall bear the expense of uncovering Work and replacing Work.

9.2.E. In any case where Contractor covers Work contrary to City's request, Contractor shall uncover Work for City's observation or inspection at City's request. Contractor shall bear the cost of uncovering Work.

9.2.F. Whenever required by City, Contractor shall furnish tools, labor and materials necessary to make examination of Work that may be completed or in progress, even to extent of uncovering or taking down portions of finished Work. Should Work be found unsatisfactory, cost of making examination and of reconstruction

shall be borne by Contractor. If Work is found to be satisfactory, City, in manner herein prescribed for paying for alterations, modifications, and extra Work, except as otherwise herein specified, will pay for examination.

9.2.G. Inspection of the Work by or on behalf of City, or City's failure to do so, shall not under any circumstances be deemed a waiver or approval of any non-conforming aspect of the Work. Contractor shall have an absolute duty, in the absence of a written Change Order signed by City, to perform Work in conformance with the Contract Documents.

9.2.H. Any inspection, evaluation, or test performed by or on behalf of City relating to the Work is solely for the benefit of City, and shall not be relied upon by Contractor. Contractor shall not be relieved of the obligation to perform Work in accordance with the Contract Documents, nor relieved of any guaranty, warranty, or other obligation, as a result of any inspections, evaluations, or tests performed by City, whether or not such inspections, evaluations, or tests are permitted or required under the Contract Documents. Contractor shall be solely responsible for testing and inspecting Work already performed to determine whether such Work is in proper condition to receive later Work.

**9.3 Correction Of Defective Work**

9.3.A. If Contractor fails to supply sufficient skilled workers, suitable materials or equipment, or to furnish or perform the Work in such a way that the completed Work will conform to Contract Documents, City may order Contractor to replace any Defective Work, or stop any portion of Work to permit City (at Contractor's expense) to replace such Defective Work. These City rights are entirely discretionary on the part of the City, and shall not give rise to any duty on the part of City to exercise the rights for the benefit of Contractor or any other party.

9.3.B. City may direct Contractor to correct any Defective Work or remove it from the Site and replace it with Work that is not defective and satisfactorily correct or remove and replace any damage to other Work or the work of others resulting from the correction or removal. Contractor shall be responsible for any and all claims, costs, losses and damages caused by or resulting from such correction or removal. A Change Order will be issued incorporating the necessary revisions in the Contract Documents with respect to the Work and the Contract Sum. If the parties are unable to agree to the amount of an appropriate decrease in the Contract Sum, City may decide the proper amount or, in its discretion may elect to leave the Contract Sum unchanged and deduct from moneys due Contractor, all such claims, costs, losses and damaged caused by or resulting from the correction or removal. If Contractor disagrees with City's calculations, it may make a claim as provided in Article 12 of this Document 00700. City's rights under this paragraph 9.3.B shall be in addition to any other rights it may have under the Contract Documents or by law.

9.3.C. Correction Period: If within one (1) year after the date of Final Acceptance, or such longer period of time as may be prescribed by laws or regulations, or by the terms of Contract Documents, any Work is found to be defective, Contractor shall promptly, without cost to City and in accordance with City's written instructions, correct such Defective Work. Contractor shall remove any Defective Work rejected by City and replace it with Work that is not defective, and satisfactorily correct or remove and replace any damage to other Work or the work of others resulting therefrom. If Contractor fails to promptly comply

with the terms of such instructions, or in an emergency where delay would cause serious risk of loss or damage, City may have the Defective Work corrected or the rejected Work removed and replaced. Contractor shall pay for all claims, costs, losses and damages caused by or resulting from such removal and replacement. Where Contractor fails to correct Defective Work, or defects are discovered outside the correction period, City shall have all rights and remedies granted by law.

9.3.D. In special circumstances where a part of the Work is occupied or a particular item of equipment is placed in continuous service before Final Acceptance of all the Work, the correction period for that part of Work or that item may start to run from an earlier date if so provided by Change Order.

9.3.E. Where Defective Work or rejected Work (and damage to other Work resulting therefrom) has been corrected, removed, or replaced under this provision after the commencement of the correction period, the correction period hereunder with respect to such Work shall be extended for an additional period of one (1) year after such correction or removal and replacement has been satisfactorily completed.

**9.4 Acceptance And Correction Of Defective Work By City**

9.4.A. City may accept Defective Work. Contractor shall pay all claims, costs, losses and damages attributable to City's evaluation of and determination to accept such Defective Work. If City accepts any Defective Work prior to final payment, a Change Order will be issued incorporating the necessary revisions in the Contract Documents with respect to the Work and the Contract Sum. If the parties are unable to agree to the amount of an appropriate decrease in the Contract Sum, City may deduct from moneys due Contractor, all claims, costs, losses, damages, expenses and liabilities attributable to the Defective Work. If Contractor disagrees with City's calculations, Contractor may make a claim as provided in Article 12 of this Document 00700. If City accepts any Defective Work after final payment, Contractor shall pay to City, an appropriate amount as determined by City.

9.4.B. City may correct and remedy deficiency if, after five (5) days' written notice to Contractor, Contractor fails to correct Defective Work or to remove and replace rejected Work in accordance with paragraph 9.3.B of this Document 00700; or provide a plan for correction of Defective Work acceptable to City; or perform Work in accordance with Contract Documents. In connection with such corrective and remedial action, City may exclude Contractor from all or part of the Site; take possession of all or part of Work and suspend Contractor's Work related thereto; take possession of all or part of Contractor's tools, appliances, construction equipment and machinery at the Site; and incorporate in Work any materials and equipment stored at the Site or for which City has paid Contractor but which are stored elsewhere. Contractor shall allow City, its representatives, agents, employees, and other contractors and Engineer's consultants access to the Site to enable City to exercise the rights and remedies under this paragraph 9.4.B. Contractor shall be responsible for all claims, costs, losses, damages, expenses and liabilities incurred or sustained by City in exercising such rights and remedies. A Change Order will be issued incorporating the necessary revisions in the Contract Documents with respect to Work and the Contract Sum. If the parties are unable to agree to the amount of an appropriate

decrease in the Contract Sum, City may deduct from moneys due Contractor, all claims, costs, losses and damages caused by or resulting from the correction or removal. If Contractor disagrees with City's calculations, Contractor may make a claim as provided in Article 12 of this Document 00700.

### 9.5 Rights Upon Inspection Or Correction

9.5.A. Contractor shall not be allowed an extension of Contract Time because of any delay in the performance of Work attributable to the exercise by City of its rights and remedies under this Article 9. Where City exercises its rights under this Article 9, it retains all other rights it has by law or under the Contract Documents including, but not limited to, the right to terminate Contractor's right to proceed with the Work under the Contract Documents and/or make a claim or back charge where a Change Order cannot be agreed upon.

9.5.B. Inspection by City shall not relieve Contractor of its obligation to have furnished material and workmanship in accordance with Contract Documents. Payment for Work completed through periodic progress payments or otherwise shall not operate to waive City's right to require full compliance with Contract Documents and shall in no way be deemed as acceptance of the Work paid therefor. Contractor's obligation to complete the Work in accordance with Contract Documents shall be absolute, unless City agrees otherwise in writing.

### 9.6 Samples And Tests Of Materials And Work

Contractor shall furnish, in such quantities and sizes as may be required for proper examination and tests, samples or test specimens of all materials to be used or offered for use in connection with Work. Contractor shall prepare samples or test specimens at its expense and furnish them to City. Contractor shall submit all samples in ample time to enable City to make any necessary tests, examinations, or analyses before the time it is desired to incorporate the material into the Work.

### 9.7 Proof Of Compliance Of Contract Provisions

In order that City may determine whether Contractor has complied or is complying with requirements of Contract Documents not readily enforceable through inspection and tests of Work and materials, Contractor shall at any time, when requested, submit to City properly authenticated documents or other satisfactory proofs of compliance with all applicable requirements.

### 9.8 Acceptance

Inspection by City or its authorized agents or representatives, any order or certificate for the payment of money, any payment, acceptance of the whole or any part of Work by City, any extension of time, any verbal statements on behalf of City or its authorized agents or representatives shall not operate as a waiver or modification of any provision of the Contract Documents, or of any power reserved to City herein or therein or any right to damages provided in the Contract Documents. Any waiver of any breach of the Contract Documents shall not be held to be a waiver of any other subsequent breach.

## 10. CONTRACTOR'S ORGANIZATION AND EQUIPMENT

### 10.1 Contractor's Legal Address

Address and facsimile number given in Contractor's Bid are hereby designated as Contractor's legal address and facsimile number. Contractor may change its legal

address and facsimile number by notice in writing, delivered to City, which in conspicuous language advises City of a change in legal address or facsimile number, and which City accepts in writing. Delivery to Contractor's legal address or depositing in any post office or post office box regularly maintained by the United States Postal Service, in a wrapper with postage affixed, directed to Contractor at legal address, or of any drawings, notice, letter or other communication, shall be deemed legal and sufficient service thereof upon Contractor. Facsimile to Contractor's designated facsimile number of any letter, memorandum, or other communication on standard or legal sized paper, with proof of facsimile transmission, shall be deemed legal and sufficient service thereof upon Contractor.

### 10.2 Contractor's Office At The Work Site

Contractor shall maintain an office at the Site, which office shall be headquarters of a Contractor representative authorized to transmit to and receive from City, communications, instructions or Drawings. Communications, instructions, or Drawings given to Contractor's representative or delivered at the Site office in representative's absence shall be deemed to have been given to Contractor.

### 10.3 Contractor's Superintendents Or Forepersons

Contractor shall at all times be represented on Site by one or more superintendents or forepersons authorized and competent to receive and carry out any instructions that City may give, and shall be liable for faithful observance of instructions delivered to Contractor or to authorized representative or representatives on Site.

### 10.4 Proficiency In English

Supervisors, security guards, safety personnel and employees who have unescorted access to the Site shall possess proficiency in the English language in order to understand, receive and carry out oral and written communications or instructions relating to their job functions, including safety and security requirements.

### 10.5 Contractor's And Subcontractors' Employees

Contractor shall employ, and shall permit its Subcontractors to employ, only competent and skillful personnel to do Work. If City notifies Contractor that any of its employees, or any of its Subcontractors' employees on Work is incompetent, unfaithful, disorderly or profane, or fails to observe customary standards of conduct or refuses to carry out any provision of the Contract Documents, or uses threatening or abusive language to any person on Work representing City, or violates sanitary rules, or is otherwise unsatisfactory, and if City requests that such person be discharged from Work, then Contractor or its Subcontractor shall immediately discharge such person from Work and the discharged person shall not be re-employed on the Work except with consent of City.

### 10.6 Contractor To Supply Sufficient Workers And Materials

10.6.A. Unless otherwise required by City under the terms of Contract Documents, Contractor shall at all times keep on the Site materials and employ qualified workers sufficient to prosecute Work at a rate and in a sequence and manner necessary to complete Work within the Contract Time. This obligation shall remain in full force and effect notwithstanding disputes or claims of any type.

10.6.B. At any time during progress of Work should Contractor directly or indirectly (through Subcontractors) refuse, neglect, or be unable to supply sufficient materials or employ qualified workers to prosecute the Work as required, then City may require Contractor to accelerate the Work and/or furnish additional

qualified workers or materials as City may consider necessary, at no cost to City. If Contractor does not comply with the notice within three (3) Business Days of date of service thereof, City shall have the right (but not a duty) to provide materials and qualified workers to finish the Work or any affected portion of Work, as City may elect. City may, at its discretion, exclude Contractor from the Site, or portions of the Site or separate work elements during the time period that City exercises this right. City will deduct from moneys due or which may thereafter become due under the Contract Documents, the sums necessary to meet expenses thereby incurred and paid to persons supplying materials and doing Work. City will deduct from funds or appropriations set aside for purposes of Contract Documents the amount of such payments and charge them to Contractor as if paid to Contractor. Contractor shall remain liable for resulting delay, including liquidated damages and indemnification of City from claims of others.

10.6.C. Exercise by City of the rights conferred upon City in paragraph 10.6.B of this Document 00700, is entirely discretionary on the part of City. City shall have no duty or obligation to exercise the rights referred to in paragraph 10.6.B of this Document 00700 and its failure to exercise such rights shall not be deemed an approval of existing Work progress or a waiver or limitation of City's right to exercise such rights in other concurrent or future similar circumstances. The rights conferred upon City under paragraph 10.6.B of this Document 00700 are cumulative to City's other rights under any provision of the Contract Documents.

### 10.7 Contractor To List Trades Working

Contractor shall list the trades working on the Site and their scheduled activities on a daily basis, and provide a copy of that list to City

### 10.8 Contractor's Use Of The Site

Contractor shall not make any arrangements with any person to permit occupancy or use of any land, structure or building within the limits of the Work, for any purpose whatsoever, either with or without compensation, in conflict with any agreement between City and any owner, former owner or tenant of such land, structure or buildings. Contractor may not occupy City-owned property outside the limit of the Work as indicated on the Drawings unless it obtains prior approval from City.

## 11. PROSECUTION AND PROGRESS OF THE WORK

### 11.1 Schedules And Examinations Of Contract Documents

11.1.A. Contractor shall submit schedules and reports, Shop Drawings and Submittals in the appropriate quantity and within the required time, arrange conferences and meetings and proceed with the Work in accordance with Contract Documents, including Sections 01315 (Project Meetings), 01320 (Progress Schedules and Reports), and 01330 (Submittal Procedures).

11.1.B. Contractor shall submit to City for review and discussion at the Preconstruction Conference described in Section 01315 (Project Meetings):

1. Progress schedules and reports as required by Sections 01320 (Progress Schedules and Reports) and 01330 (Submittal Procedures). Contractor shall utilize Progress Schedule in planning, scheduling, coordinating,

performing and controlling Work (including all activities of Subcontractors, assigned contractors, equipment vendors and suppliers). Contractor shall update Progress Schedule on a monthly basis to depict accurately the actual progress of Work and for evaluating and preparing Contractor's monthly progress payments. Contractor's failure to submit and maintain an acceptable progress schedule may, in City's discretion, and without limiting the materiality of Contractor's other obligations under the Contract Documents, constitute grounds to declare Contractor in material breach of the Contract Documents

2. Within 14 Days after the Notice of Award, a preliminary schedule of Shop Drawing and Sample submittals that shall list each required submittal and the times for submitting, reviewing and processing such submittal, as required by Section 01330 (Submittal Procedures). If no such schedule is agreed upon, then all Shop Drawings, Samples and product data submittals shall be completed and submitted within 21 Days after receipt of Notice of Award from City.

3. Within 14 Days after the Notice of Award, a preliminary Schedule of Values for all the Work which shall include quantities and prices of items aggregating the Contract Sum and shall subdivide each Schedule of Values into component activities in sufficient detail to serve as the basis for progress payments during construction. Such Schedule of Values shall include an appropriate amount of overhead and profit applicable to each item of Work, a line item for Project Record Documents, and a line item for Project scheduling, and shall conform to Section 01200 (Measurement and Payment).

11.1.C. Unless otherwise provided in the Contract Documents, at least 15 Days before submission of the first application for payment, a conference attended by Contractor, City, and others as appropriate, will be held to review for acceptability the schedules submitted in accordance with paragraph 11.1.B of this Document 00700 and first reviewed at the Preconstruction Conference. Contractor shall have an additional seven Days to make corrections and adjustments and to complete and resubmit the schedules. Schedules shall be updated and completed as required by Sections 01200 (Measurement and Payment), 01320 (Progress Schedules and Reports) and 01330 (Submittal Procedures). No progress payment shall be due or owing to Contractor until the schedules are submitted to and acceptable to City and/or Engineer as meeting the requirements of the Contract Documents, including Sections 01200 (Measurement and Payment), 01320 (Progress Schedules and Reports) and 01330 (Submittal Procedures). City's acceptance of Contractor's schedules will not create any duty of care or impose on City any responsibility for the sequencing, scheduling or progress of Work nor will it interfere with or relieve Contractor from Contractor's full responsibility therefor.

11.1.D. Before commencing any portion of Work, Contractor shall inform City in writing as to time and place at which Contractor wishes to commence Work, and nature of Work to be done, in order that proper provision for inspection of Work may occur, and to assure measurements necessary for record and payment. Information shall be given to City a reasonable time in advance of time at which Contractor proposes to begin Work, so that City may complete necessary preliminary work without inconvenience or delay to Contractor.

11.1.E. Contractor shall submit submittals and Shop Drawings to City (or Engineer if City so designates) for review in strict accordance with Section 01330 (Submittal Procedures). Submission of a Shop Drawing shall constitute Contractor's representation that all requirements of Section 01330 (Submittal Procedures) have been complied with. All submittals will be identified as City may require and in the number of copies specified in Section 01330 (Submittal Procedures).

11.1.F. Contractor shall not perform Work that requires submission of a Shop Drawing or Sample or other submittal prior to submission and favorable review of the Shop Drawing or Sample or submittal. Where a Shop Drawing or Sample or other submittal is required by Contract Documents or the final Schedule of Shop Drawing and Sample Submittals accepted by City, any related Work performed prior to City's approval of the pertinent submittal shall be at the sole expense, responsibility and risk of Contractor.

**11.2 Cost Data**

11.2.A. Contractor shall maintain full and correct information as to the number of workers employed in connection with each subdivision of Work, the classification and rate of pay of each worker in form of certified payrolls, the cost to Contractor of each class of materials, tools and appliances used by Contractor in Work, and the amount of each class of materials used in each subdivision of Work. Contractor shall provide City with monthly summaries of this information. If Contractor maintains or is capable of generating summaries or reports comparing actual Project costs with Bid estimates or budgets, Contractor shall provide City with a copy of such report upon City's request and whenever it is generated.

11.2.B. Contractor shall maintain daily job reports recording all significant activity on the job, including the number of workers on Site, Work activities, problems encountered and delays. Contractor shall provide City with copies for each Day Contractor works on the Project, to be delivered to City either the same Day or the following morning before starting work at the Site. Contractor shall take monthly progress photographs of all areas of the Work. Contractor shall maintain copies of all correspondence with Subcontractors and records of meetings with Subcontractors.

11.2.C. City shall have the right to audit and copy Contractor's books and records of any type, nature or description relating to the Project (including but not limited to financial records reflecting in any way costs claimed on the Project), and to inspect the Site, including Contractor's trailer, or other job Site office, and this requirement shall be contained in the subcontracts of Subcontractors working on Site. By way of example, City shall have the right to inspect and obtain copies of all Contract Documents, planning and design documents, Bid proposal and negotiation documents (subject to Document 00670 [Escrow Bid Documents]), cost records and job cost variance reports, design modification proposals, value engineering or other cost reduction proposals, revisions made to the original design, job progress reports, photographs, and as-built drawings maintained by Contractor. City and any other applicable governmental entity shall have the right to inspect all information and documents maintained under this paragraph 11.2 at any time during the Project and for a period of five years following Substantial Completion. This right of inspection shall not relieve

Contractor of its duties and obligations under the Contract Documents. This right of inspection shall be specifically enforceable in a court of law, either independently or in conjunction with enforcement of any other rights in the Contract Documents.

11.2.D. Contractor shall maintain in a safe place at the Site one record copy of all Drawings, Specifications, Addenda, Contract Modifications, Change Orders, Work Directives, Force Account orders, and written interpretations and clarifications in good order and annotated to show all changes made during construction. These Project Record Documents, together with all approved Samples and a counterpart of all approved Shop Drawings, shall be maintained and available to City for reference. Upon completion of the Work, Contractor shall deliver to City, the Project Record Documents, Samples and Shop Drawings and as-built drawings.

## 12. CLAIMS BY CONTRACTOR

### 12.1 General

12.1.A. Contract Interpretation Disputes: Should it appear to Contractor that Work to be performed or any of the matters relative to Contract Documents (including without limitation Drawings or Specifications) are not satisfactorily detailed or explained therein, or should any questions arise as to the meaning or intent of Contract Documents (including without limitation Drawings or Specifications), Contractor shall give written notice to City. Contractor shall bear all costs incurred in giving notice. City will render a determination regarding the issue, which shall be final. If Contractor disagrees with City's decision, Contractor's sole and exclusive remedy is to file a claim in accordance with this Article 12. Contractor shall diligently prosecute the Disputed Work (as defined below to Final Completion pending resolution of any claim.

12.1.B. Work Disputes: Contractor shall give written notice to City of any dispute arising under the Contract Documents respecting the true value of any Work performed, the implementation of Work required by Contract Documents, any Work omitted, any extra Work that Contractor may be required to perform or time extensions, respecting the size of any payment to Contractor during the performance of Contract Documents, or of compliance with Contract Documents procedures. City will render a determination regarding the issue, which shall be final. If Contractor disagrees with City's decision, Contractor's sole and exclusive remedy is to file a claim in accordance with this Article 12. Pending the resolution of any claim, Contractor shall diligently prosecute the Disputed Work to Final Completion.

12.1.C. The claim notice and documentation procedure described in this Article 12 applies to all claims and disputes arising under the Contract Documents, including without limitation any claim or dispute by any Subcontractor or material supplier. All Subcontractor and supplier claims of any type shall be brought only through Contractor as provided in this Article 12. Under no circumstances shall any Subcontractor or supplier make any direct claim against City.

12.1.D. "Claim" means a written demand or written assertion by Contractor seeking, as a matter of right, the payment of money, the adjustment or interpretation of

Contract Documents terms, or other relief arising under or relating to Contract Documents. In order to qualify as a "claim," the written demand must state that it is a claim submitted under this Article 12.

12.1.E. A voucher, invoice, proposed change, Application for Payment, cost proposal, RFI, change order request, or other routine or authorized form of request for payment is not a claim under the Contract Documents. If such request is disputed as to liability or amount, then the disputed portion of the submission may be converted to a claim under the Contract Documents by submitting a separate claim in compliance with claim submission requirements.

12.1.F. The provisions of this Article 12 apply under the California Government Code, Title 1, Division 3.6, Part 3, Chapter 5 and survive termination, breach or completion of the Contract Documents. Contractor shall bear all costs incurred in the preparation and submission of a claim.

**12.2 Procedure**

12.2.A. Should any clarification, determination, action or inaction by City or Engineer, Work, or any other event, in the opinion of Contractor, exceed the requirements of or not comply with Contract Documents, or otherwise result in Contractor seeking additional compensation in time or money or damages for any reason (collectively "Disputed Work"), then Contractor and City will make good faith attempts to resolve informally any and all such issues, claims and/or disputes. Before commencing the Disputed Work, or within seven Days after Contractor's first knowledge of the Disputed Work, whichever is earlier, Contractor shall file a written notice and cost proposal for the Disputed Work with City stating clearly and in detail its objection and reasons for contending the Work or interpretation is outside the requirements of Contract Documents. If a written notice and cost proposal for Disputed Work is not issued within this time period, or if Contractor proceeds with the Disputed Work without first having given the notice required by this paragraph 12.2.A, Contractor shall waive its rights to further claim on the specific issue.

12.2.B. City will review Contractor's timely notice and cost proposal for Disputed Work and provide a decision. If, after receiving the decision, Contractor disagrees with it or still considers the Work required of it to be outside of the requirements of Contract Documents, it shall so notify City, in writing, within seven Days after receiving the decision, by submitting a notice of potential claim, stating that a formal claim will be issued. Within 30 Days of receiving the decision, Contractor shall submit its claim in the form specified herein and all arguments, justification, cost or estimates, schedule analysis, and detailed documentation supporting its position. Contractor's failure to furnish notification within seven Days and all justifying documentation within 30 Days will result in Contractor waiving its right to the subject claim. If Disputed Work persists longer than 30 Days, then Contractor shall, every 30 Days until the Disputed Work ceases, submit to City a document titled "Claim Update" that shall update and quantify all elements of the claim as completely as possible. Contractor's failure to submit a Claim Update or to quantify costs every 30 Days shall result in waiver of the claim for that 30-Day period. Claims or Claim Updates stating that damages, total damages (direct and indirect), schedule input and/or any time extension will be determined at a later date shall not comply with this paragraph 12.2.B and shall result in Contractor waiving its claim(s).

12.2.C. Upon receipt of Contractor's formal claim including all arguments, justifications, cost or estimates, schedule analysis, and documentation supporting its position as previously stipulated, City or its designee will review the issue and render a final determination. If Contractor's claims submitted in accordance with this Article 12 at Project completion total less than $375,000, then claims resolution shall proceed in the manner prescribed by Article 1.5, Chapter 1, Part 3 of Division 2 of the California Public Contract Code.

12.2.D. Claims shall be calculated in the same manner as Change Orders per Section 01250 (Modification Procedures). EXCEPT WHERE PROVIDED BY LAW, OR ELSEWHERE IN THESE CONTRACT DOCUMENTS (IF APPLICABLE), CITY SHALL NOT BE LIABLE FOR SPECIAL OR CONSEQUENTIAL DAMAGES, AND CONTRACTOR SHALL NOT INCLUDE THEM IN ITS CLAIMS. CONTRACTOR SHALL BE LIMITED IN ITS RECOVERY ON CLAIMS TO THE CHANGE ORDER CALCULATIONS SET FORTH IN SECTION 01250 (MODIFICATION PROCEDURES).

**12.3 Claim Format**

12.3.A. Contractor shall submit the claim justification in the following format:

1. Cover letter and certification;
2. Summary of claim, including underlying facts, entitlement, schedule analysis, quantum calculations, contract provisions supporting relief;
3. List of documents relating to claim including Specifications, Drawings, clarifications/requests for information, schedules, notices of delay, cost calculations and any others;
4. Chronology of events and correspondence;
5. Analysis of claim merit;
6. Analysis of claim cost; and
7. Attach supporting documents referenced in paragraph 12.3.A.3.

**12.4 Exclusive Remedy**

Contractor's performance of its duties and obligations specified in this Article 12 and submission of a claim as provided in this Article 12 is Contractor's sole and exclusive remedy for disputes of all types pertaining to the payment of money, extension of time, the adjustment or interpretation of Contract Documents terms or other contractual or tort relief arising from Contract Documents. This exclusive remedy and the limitation of liability (expressed herein and elsewhere throughout Contract Documents) apply notwithstanding the completion, termination, suspension, cancellation, breach or rescission of the Work or Contract Documents, negligence or strict liability by City, its representatives, consultants or agents, or the transfer of Work or the Project to City for any reason whatsoever. Contractor waives all claims of waiver, estoppel, release, bar, or any other type of excuse for non-compliance with the claim submission requirements. Compliance with the notice and claim submission procedures described in Article 12 is a condition precedent to the right to commence litigation, file a Government Code Claim, or commence any other legal action. Claim(s) or issue(s) not raised in a timely protest and timely claim submitted under this Article 12 may not be asserted in any Government Code Claim, subsequent litigation, or legal action. City shall not have deemed to waive

any provision under this Article 12, if at City's sole discretion, a claim is accepted in a manner not in accord with this Article 12.

### 12.5 Mediation

All Contractor claims not subject to the claim resolution procedures set forth in Section 01410 (Regulatory Requirements) shall, as a condition precedent to litigation (or if otherwise permitted by the Contract Documents, arbitration) thereon, first be mediated. Mediation shall be non-binding and utilize the services of a mediator mutually acceptable to the parties and, if the parties cannot agree, a mediator selected by the American Arbitration Association from its panel of approved mediators trained in construction industry mediation. All statutes of limitation shall be tolled from the date of the demand for mediation until a date two (2) weeks following the mediation's conclusion. All unresolved Contractor claims shall be submitted to the same mediator. The cost of mediation shall be equally shared.

### 12.6 Subcontractor Claims

Contractor shall present as its claims all Subcontractor, sub-Subcontractor and supplier claims of any type, and prove them under the terms of the Contract Documents. City shall not be directly liable to any Subcontractor, any supplier, or any other person or organization, or to any surety for or employee or agent of any of them, for damages or extra costs of any type arising out of or resulting from the Project.

## 13. LEGAL AND MISCELLANEOUS

### 13.1 Laws And Regulations

13.1.A. Contractor shall keep fully informed of and shall comply with all laws, ordinances, regulations and orders of any properly constituted authority affecting the Contract Documents, Work and persons connected with Work, and shall protect and indemnify City and its officers, employees, consultants and agents against any claim or liability, including attorney's fees, arising from or based on violation of law, ordinance, regulation or order, whether by Contractor or by Subcontractors, employees or agents. Authorized persons may at any time enter upon any part of Work to ascertain compliance of all applicable laws, ordinances, regulations and orders.

13.1.B. Whenever Drawings and Specifications require larger sizes or higher standards than are required by any applicable law, ordinance, regulation or order, Drawings and Specifications shall govern. Whenever Drawings and Specifications require something that will violate such laws, ordinances, regulations or orders, then such laws, ordinances, regulations or orders shall govern.

### 13.2 Permits And Taxes

Contractor shall procure all permits and licenses applicable to the Work (including environmental matters to the extent applicable), pay all charges and fees, including fees for street opening permits, comply with, implement and acknowledge effectiveness of all permits, initiate and cooperate in securing all required notifications or approvals therefore, and give all notices necessary and incident to due and lawful prosecution of Work, unless otherwise provided herein. City will pay applicable building permits, school, sanitation and water fees, except as otherwise provided in the Contract Documents. Contractor shall pay all sales and/or use taxes levied on materials,

supplies, or equipment purchased and used on or incorporated into Work, and all other taxes properly assessed against equipment or other property used in connection with Work, without any increase in the Contract Sum. Contractor shall make necessary arrangements with proper authorities having jurisdiction over roads, streets, pipelines, navigable waterways, railroads, and other works in advance of operations, even where City may have already obtained permits for the Work.

**13.3 Responsibility Of Contractor And Indemnification**

13.3.A. City and each of its officers, employees, consultants and agents including, but not limited to the Board, Engineer and each City's Representative, shall not be liable or accountable in any manner for loss or damage that may happen to any part of the Work; loss or damage to materials or other things used or employed in performing the Work; injury, sickness, disease, or death of any person; or damage to property resulting from any cause whatsoever except their sole negligence, willful misconduct or active negligence, attributable to performance or character of the Work, and Contractor releases all of the foregoing persons and entities from any and all such claims.

13.3.B. To the furthest extent permitted by law (including without limitation California Civil Code Section 2782), Contractor shall assume defense of, and indemnify and hold harmless, City and each of its officers, employees, consultants (including without limitation Consulting Engineer) and agents, including but not limited to the Board, Engineer and each City's Representative, from claims, suits, actions, losses and liability of every kind, nature and description, including but not limited to claims and fines of regulatory agencies and attorney's fees and consultant's fees, directly or indirectly arising out of, connected with or resulting from performance of the Work, failure to perform the Work, or condition of the Work which is caused in whole or part by any act or omission of Contractor, Subcontractors, anyone directly or indirectly employed by any of them or anyone for whose acts any of them may be liable, regardless of whether it is caused in part by the negligence of City or by any person or entity required to be indemnified hereunder.

13.3.C. With respect to third-party claims against Contractor, Contractor waives any and all rights to any type of express or implied indemnity against City and each of its officers, employees, consultants and agents including, but not limited to City, the Board, Engineer and each City's Representative.

13.3.D. Approval or purchase of any insurance contracts or policies shall in no way relieve from liability nor limit the liability of Contractor, its Subcontractors of any tier, or the officers or agents of any of them.

13.3.E. To the furthest extent permitted by law (including, without limitation, Civil Code Section 2782), the indemnities, releases of liability and limitations of liability, claims procedures, and limitations of remedy expressed throughout Contract Documents shall apply even in the event of breach of contract, negligence (active or passive), fault or strict liability of the party(ies) indemnified, released, or limited in liability, and shall survive the termination, rescission, breach, abandonment, or completion of the Work or the terms of the Contract Documents. If Contractor fails to perform any of these defense or indemnity obligations, City may in its discretion back charge Contractor for City's costs and damages resulting therefrom and withhold such sums from progress payments or other contract moneys which may become due.

13.3.F. The indemnities in the Contract Documents shall not apply to any indemnified party to the extent of its sole negligence or willful misconduct; nor shall they apply to City or other indemnified party to the extent of its active negligence.

**13.4 Concealed Or Unknown Conditions**

13.4.A. If either of the following conditions is encountered at Site when digging trenches or other excavations that extend deeper than four feet below the surface, Contractor shall give a written Notice of Differing Site Conditions to City promptly before conditions are disturbed, except in an emergency as required by paragraph 16.4 of this Document 00700, and in no event later than seven (7) days after first observance of:

1. Subsurface or Latent physical conditions which differ materially from those indicated in the Contract Documents; or
2. Unknown physical conditions of an unusual nature or which differ materially from those ordinarily encountered and generally recognized as inherent in work of the character provided for in the Contract Documents.

In response to Contractor's Notice of Differing Site Conditions under this paragraph 13.4.A, City will investigate the identified conditions, and if they differ materially and cause increase or decrease in Contractor's cost of, or time required for, performance of any part of the Work, City will issue either a Request for Proposal or a Construction Change Directive under the procedures described in the Contract Documents, including without limitation Section 01250 (Modification Procedures). If City determines that physical conditions at the Site are not Latent or are not materially different from those indicated in Contract Documents or that no change in terms of the Contract Documents is justified, City will so notify Contractor in writing, stating reasons

13.4.B. Contractor shall not be entitled to any adjustment in the Contract Sum or Contract Time regarding claimed Latent or materially different Site conditions (whether above or below grade) if:

1. Contractor knew of the existence of such conditions at the time Contractor submitted its Bid; or
2. Contractor should have known of the existence of such conditions as a result of having complied with the requirements of Contract Documents, including without limitation paragraphs 2.1 and 8.4 of this Document 00700; or
3. The information or conditions claimed by Contractor to be Latent or materially different consist of information, conclusions, opinions or deductions of the kind that paragraph 2.1 of this Document 00700 precludes reliance upon; or
4. Contractor was required to give written Notice of Differing Site Conditions and failed to do so within the time required.

13.4.C. If City and Contractor are unable to agree on entitlement to or as to the amount or length of any adjustment in the Contract Sum or Contract Time required under this paragraph 13.4, Contractor shall proceed with the Work as directed by City and may make a claim as provided in Article 12 of this Document 00700.

## 13.5 Notice Of Hazardous Waste Or Materials Conditions

13.5.A. Contractor shall give a written Notice of Hazardous Materials Condition to City promptly, before any of the following conditions are disturbed (except in an emergency as required by paragraph 16.4 of this Document 00700), and in no event later than 24 hours after first observance of any:

1. Material that Contractor believes may be hazardous waste or hazardous material, as defined in Section 25117 of the Health and Safety Code (including, without limitation, asbestos, lead, PCBs, petroleum and related hydrocarbons, and radioactive material) that is required to be removed to a Class I, Class II, or Class III disposal site in accordance with provisions of existing law ("hazardous material"); or

2. Other material that may present an imminent substantial danger to persons or property exposed thereto in connection with Work at the Site ("other materials").

13.5.B. Except as otherwise provided in the Contract Documents or as provided by applicable law, Contractor shall not be required to give any notice for the disturbance or observation of any such hazardous materials or other materials where such matter is disturbed or observed as part of the scope of Work under the Contract Documents (such as hazardous waste or hazardous material investigation, remediation or disposal activities which are identified as the subject of Work under the Contract Documents), where Contractor complies with all requirements in the Contract Documents and applicable law respecting such materials.

13.5.C. Contractor's Notice of Hazardous Materials Condition shall indicate whether the hazardous materials or other materials were shown or indicated in the Contract Documents to be within the scope of Work, and whether the hazardous materials or other materials were brought to the Site by Contractor, its Subcontractors, suppliers, or anyone else for whom Contractor is responsible.

13.5.D. Contractor shall not be entitled to any adjustment in the Contract Sum or Contract Time regarding claimed hazardous waste or materials if:

1. Contractor knew of the existence of such hazardous materials or other materials at the time Contractor submitted its Bid; or

2. Contractor should have known of the existence of such hazardous material or other materials as a result of its having the responsibility to obtain additional or supplementary examinations, investigation, explorations, tests, studies, and data concerning the conditions at or contiguous to the Site prior to submitting its Bid; or

3. Contractor failed to give the written notice within the time required by paragraph 13.5.A of this Document 00700.

13.5.E. If City determines that conditions involve hazardous materials or other materials and that a change in Contract Document terms is justified, City will issue either a Request for Proposal or Construction Change Directive under the procedures described in the Contract Documents, including without limitation Section 01250 (Modification Procedures). If City determines that conditions do not involve hazardous materials or other materials or that no change in Contract Document

terms is justified, City will notify Contractor in writing, stating the reasons for its determination.

13.5.F. If City and Contractor are unable to agree on entitlement to or as to the amount or length of any adjustment in the Contract Sum or Contract Time required under this paragraph 13.5, Contractor shall proceed with the Work as directed by City and may make a claim as provided in Article 12 of this Document 00700.

13.5.G. In addition to the parties' other rights under paragraph 13.5.E of this Document 00700, if Contractor does not agree to resume Work based on a reasonable belief that it is unsafe, or does not agree to resume Work under special conditions, City may order the disputed portion of Work deleted from the Work, or performed by others, or City may invoke its right to terminate Contractor's right to proceed under the Contract Documents in whole or in part, for convenience or for cause as the facts may warrant. If Contractor does not agree with City's determination of any adjustment in the Contract Sum or Contract Time as a result, Contractor may make a claim as provided in Article 12 of this Document 00700.

**13.6 Suspension Of Work**

13.6.A. City may, without cause, order Contractor in writing to suspend, delay or interrupt Work in whole or in part for such period of time as City may determine. An adjustment shall be made for increases in cost of performance of Work of the Contract Documents caused by any such suspension, delay or interruption, calculated using the measures set forth in Section 01250 (Modification Procedures). No adjustment shall be made to extent that:

1. Performance is, was or would have been so suspended, delayed or interrupted by another cause for which Contractor is responsible; or
2. An equitable adjustment is made or denied under any other provision of Contract Documents; or
3. The suspension of Work was the direct or indirect result of Contractor's failure to perform any of its obligations hereunder. Adjustments made in cost of performance may have a mutually agreed fixed or percentage fee; if the parties cannot agree, Contractor may file a claim under Article 12 of this Document 00700.

**13.7 Termination Of Contract For Cause**

13.7.A. City may declare Contractor in default of Contract Documents and City may terminate Contractor's right to proceed under the Contract Documents for cause:

1. Should Contractor make an assignment for the benefit of creditors; admit in writing its inability to pay its debts as they become due; file a voluntary petition in bankruptcy; be adjudged a bankrupt or insolvent; be the subject of an involuntary petition in bankruptcy which is not dismissed within 60 Days; file a petition or answer seeking for itself any reorganization, arrangement, composition, readjustment, liquidation, dissolution, or similar relief under any present or future statute, law, or regulation; file any answer admitting or not contesting the material allegations of a petition filed against Contractor in any such proceeding; or seek, consent to, or acquiesce in, the

appointment of any trustee, receiver, custodian or liquidator of Contractor or of all or any substantial part of its properties or if Contractor, its directors or shareholders, take action to dissolve or liquidate Contractor; or

2. Should Contractor commit a material breach of the Contract Documents. If City declares Contractor in default due to material breach, however, City must allow Contractor an opportunity to cure such breach within ten (10) days of the date of notice from City to Contractor providing notice of the default; or, if such breach is curable but not curable within such ten (10) day period, within such period of time as is reasonably necessary to accomplish such cure. (In order for Contractor to avail itself of a time period in excess of ten (10) days, Contractor must provide City within the ten (10) day period with a written plan acceptable to City to cure said breach which includes, for example, evidence of necessary resources, Subcontractor commitments, schedules and recovery schedules meeting Contract Document requirements and showing a realistic and achievable plan to cure the breach. Contractor must then diligently commence and continue such cure according to the written plan); or

3. Should Contractor violate or allow (by a Subcontractor or other person or entity for which Contractor is responsible) a violation of any valid law, statute, regulation, rule, ordinance, permit, license or order of any governmental agency applicable to the Project or Work and does not cure (or cause to be cured) such violation within ten (10) days of the date of the notice from City to Contractor demanding such cure; or, if such violation is curable but not curable within such ten (10) day period, within such period of time as is reasonably necessary to accomplish such cure. (In order for Contractor to avail itself of a time period in excess of ten (10) days, Contractor shall provide City within the ten (10) day period with a written plan to cure said violation acceptable to City, and then diligently commence and continue performance of such cure according to the written plan.)

13.7.B. If City at any time reasonably believes that Contractor is or may be in default under the Contract Documents as provided in paragraph 13.7.A of this Document 00700, City may in its sole discretion notify Contractor of this fact and request written assurances from Contractor of performance of Contract Documents and a written plan from Contractor to remedy any default under the terms of Contract Documents which City may advise Contractor of in writing. Contractor shall, within ten (10) days of City's request, deliver a written cure plan which meets the requirements of the written plan deliverable under paragraph 13.7.A.2 of this Document 00700. Failure of Contractor to provide such written assurances of performance and the required written plan, within ten (10) days of request, will constitute a material breach of Contract Documents sufficient to justify termination for cause.

13.7.C. In event of termination for cause, City will immediately serve written notice thereof upon Surety and Contractor. Surety shall have the rights and obligations set forth in Document 00610 (Construction Performance Bond). Subject to the Surety's rights under the Performance Bond (which rights are waived upon a default thereunder), City may take over the Work and prosecute it to completion by contract or by any other methods it may deem advisable.

13.7.D. In the event of termination by City as provided in paragraph 13.7.A of this Document 00700 for cause:

1. City will compensate Contractor for the value of the Work delivered to City upon termination as determined in accordance with the Contract Documents, subject to all rights of offset and back charges, and provided that Contractor provides City with updated as-builts and Project Record Documents showing the Work performed up to the date of termination. However, City will not compensate Contractor for its costs in terminating the Work or any cancellation charges owed to third parties.

2. Contractor shall deliver to City possession of the Work in its then condition including, but not limited to, all designs, engineering, Project records, Project Record Documents, cost data of all types, Drawings and Specifications and contracts with vendors and Subcontractors, all other documentation associated with the Project, and all construction supplies and aids dedicated solely to performing the Work which, in the normal course of construction, would be consumed or only have salvage value at the end of the construction period. Contractor shall remain fully liable for the failure of any Work completed and materials and equipment provided through the date of such termination to comply with the provisions of the Contract Documents. The provisions of this paragraph 13.7.D shall not be interpreted to diminish any right which City may have to claim and recover damages for any breach of Contract Documents or otherwise, but rather, Contractor shall compensate City for all loss, cost, damage, expense, and/or liability suffered by City as a result of such termination and failure to comply with Contract Documents.

3. City's rights under paragraph 13.7.D.2 shall be specifically enforceable to the greatest extent permitted by law. City shall, to the extent applicable, have all other rights and remedies set forth in any Bidding Document.

13.7.E. City may terminate portions or parts of the Work for cause, provided these portions or parts (1) have separate geographic areas from parts or portions of the Work not terminated or (2) are limited to the work of one or more specific trades or Subcontractors. In such case, Contractor shall cooperate with a completing contractor as required under Article 6 of this Document 00700.

13.7.F. In the event a termination for cause is later determined to have been made wrongfully or without cause, then the termination shall be treated as a termination for convenience, and Contractor shall have the recovery rights specified in paragraph 13.8. Any Contractor claim arising out of a termination for cause, however, shall be made in accordance with Article 12 of this Document 00700. No other loss cost, damage, expense or liability may be claimed, requested or recovered by Contractor.

**13.8 Termination Of Contract For Convenience**

13.8.A. City may terminate performance of the Work under the Contract Documents in accordance with this clause in whole, or from time to time in part, whenever City shall determine that termination is in City's best interest. Termination shall be effected by City delivering to Contractor notice of termination specifying the extent to which performance of the Work under the Contract Documents is terminated and the effective date of the termination.

13.8.B. After receiving a notice of termination under paragraph 13.8.A of this Document 00700, and except as otherwise directed by City, Contractor shall:

1. Stop Work under the Contract Documents on date and to extent specified in notice of termination;
2. Place no further orders or subcontracts for materials, services, or facilities except as necessary to complete portion of Work under the Contract Documents which is not terminated;
3. Terminate all orders and subcontracts to extent that they relate to performance of Work terminated by the notice of termination;
4. Assign to City in manner, at times, and to extent directed by City, all right, title, and interest of Contractor under orders and subcontracts so terminated. City shall have the right, in its sole discretion, to settle or pay any or all claims arising out of termination of orders and subcontracts;
5. Settle all outstanding liabilities and all claims arising out of such termination of orders and subcontracts, with approval or ratification of City to extent City may require. City's approval or ratification shall be final for purposes of this paragraph 13.8;
6. Transfer title to City, and deliver in the manner, at the times, and to the extent, if any, directed by City, all fabricated or unfabricated parts, Work in process, completed Work, supplies, and all other material produced as part of, or acquired in connection with performance of, Work terminated by the notice of termination, and completed or partially completed drawings, drawings, specifications, information, and other property which, if the Project had been completed, would have been required to be furnished to City;
7. Use its best efforts to sell, in manner, at times, to extent, and at price or prices that City directs or authorizes, any property of types referred to in paragraph 13.8.B.6 of this Document 00700, but Contractor shall not be required to extend credit to any purchaser, and may acquire any such property under conditions prescribed and at price or prices approved by City. Proceeds of transfer or disposition shall be applied to reduce payments to be made by City to Contractor under the Contract Documents or shall otherwise be credited to the price or cost of Work covered by Contract Documents or paid in such other manner as City may direct;
8. Complete performance of the part of the Work which was not terminated by the notice of termination; and
9. Take such action as may be necessary, or as City may direct, to protect and preserve all property related to Contract Documents which is in Contractor's possession and in which City has or may acquire interest.

13.8.C. After receipt of a notice of termination under paragraph 13.8A of this Document 00700, Contractor shall submit to City its termination claim, in form and with all certifications required by Article 12 of this Document 00700. Contractor's termination claim shall be submitted promptly, but in no event later than six (6) months from effective date of the termination. Contractor and City may agree upon the whole or part of the amount or amounts to be paid to Contractor because of a total or partial termination of Work under this paragraph 13.8. If

Contractor and City fail to agree on the whole amount to be paid to Contractor because of the termination of the Work under this paragraph 13.8, City's total liability to Contractor by reason of the termination shall be the total (without duplication of any items) of:

1. The reasonable cost to Contractor, without profit, for all Work performed prior to the effective date of the termination, including Work done to secure the Project for termination. Reasonable cost may not exceed the applicable percentage completion values derived from the progress schedule and the schedule of values. Deductions shall be made for cost of materials to be retained by Contractor, cost of Work defectively performed, amounts realized by sale of materials, and for other appropriate credits against cost of Work. Reasonable cost will include reasonable allowance for Project overhead and general administrative overhead not to exceed a total of ten percent (10%) of direct costs of such Work. When, in City's opinion, the cost of any item of Work is excessively high due to costs incurred to remedy or replace defective or rejected Work, reasonable cost to be allowed will be the estimated reasonable cost of performing the Work in compliance with requirements of Contract Documents and excessive actual cost shall be disallowed.
2. A reasonable allowance for profit on cost of Work performed as determined under paragraph 13.8.C.1 of this Document 00700, provided that Contractor establishes to City's satisfaction that Contractor would have made a profit had the Project been completed, and provided further that the profit allowed shall not exceed 5 percent (5%) of cost.
3. Reasonable costs to Contractor of handling material returned to vendors, delivered to City or otherwise disposed of as directed by City.
4. A reasonable allowance for Contractor's internal administrative costs in preparing termination claim.
5. Except as provided in this paragraph 13.8.C of this Document 00700, City shall not be liable for costs incurred by Contractor or Subcontractors after receipt of a notice of termination. Such non-recoverable costs include, but are not limited to, anticipated profits on Work not performed as of the date of termination, post-termination employee salaries, post-termination general administrative expenses, post-termination overhead or unabsorbed overhead, costs of preparing and submitting Contractor's Bid, attorney's fees of any type, and all costs relating to prosecution of claim or lawsuit.
6. City shall have no obligation to pay Contractor under this paragraph 13.8 unless and until Contractor provides City with updated and acceptable as-builts and Project Record Documents for Work completed prior to termination.

13.8.D. In arriving at the amount due Contractor under this clause, there shall be deducted in whole (or in the appropriate part[s] if the termination is partial):

1. All unliquidated advances or other payments on account previously made to Contractor, including without limitation all payments applicable to the terminated portion of Contract Documents;

2. Any claim which City may have against Contractor in connection with Contract Documents; and

3. The agreed price for, or proceeds of sale of, any materials, supplies, or other things kept by Contractor or sold under provisions of this paragraph 13.8, and not otherwise recovered by or credited to City.

**13.9 Contingent Assignment Of Subcontracts**

13.9.A. Contractor hereby assigns to City each Subcontract for a portion of the Work, provided that:

1. The assignment is effective only after City's termination of Contractor's right to proceed under the Contract Documents (or portion thereof relating to that Subcontract) pursuant to paragraphs 13.7 or 13.8 of this Document 00700.

2. The Assignment is effective only for the Subcontracts which City expressly accepts by notifying the Subcontractor in writing;

3. The assignment is subject to the prior rights, if any, of the Surety, obligated by Document 00610 (Construction Performance Bond) provided under the Contract Documents, where the Surety exercises its rights to complete the Contract;

4. After the effectiveness of an assignment, Contractor shall, at its sole cost and expense (except as otherwise provided in paragraphs 13.7 or 13.8 of this Document 00700), sign all instruments and take all actions reasonably requested by City to evidence and confirm the effectiveness of the assignment in City; and

5. Nothing in this paragraph 13.9 shall modify or limit any of Contractor's obligations to City arising from acts or omissions occurring before the effectiveness of any Subcontract assignment, including but not limited to all defense, indemnity and hold-harmless obligations arising from or related to the assigned Subcontract.

**13.10 Remedies and Contract Integration**

13.10.A. Subject to Contract Documents provisions regarding Contractor claims, claim review, and claim resolution, and subject to the limitations therein, the exclusive jurisdiction and venue for resolving all claims, counter-claims, disputes and other matters in question between City and Contractor arising out of or relating to Contract Documents, any breach thereof or the Project shall be the applicable court of competent jurisdiction located in the State of California, County of Santa Clara. All City remedies provided in the Contract Documents shall be taken and construed as cumulative and not exclusive; that is, in addition to each and every other remedy herein provided; and in all instances City shall have any and all other equitable and legal rights and remedies which it would have according to law.

13.10.B. The Contract Documents, any Contract Modifications and Change Orders shall represent the entire and integrated agreement between City and Contractor regarding the subject matters hereof and thereof and shall constitute the exclusive statement of the terms of the parties' agreement. The Contract Documents, and any Contract Modifications and Change Orders, shall supersede any and all prior negotiations, representations or agreements, written or oral, express or implied, that relate in any way to the subject matter of

the Contract Documents or written modifications. City and Contractor represent and agree that, except as otherwise expressly provided in the Contract Documents, they are entering into the Contract Documents and any subsequent written modification in sole reliance upon the information set forth or referenced in the Contract Documents or Contract Modifications and the parties are not and will not rely on any other information.

13.10.C. In any proceeding to enforce the Contract Documents, Contractor and City agree that the finder of fact shall receive detailed instructions on the meaning and operation of the Contract Documents, including their conditions, limitations of liability and remedies clauses, claims procedures and any other provisions impacting major defenses and theories of liability of the parties. Detailed findings of fact shall be requested, to verify Contract enforcement.

13.10.D. Either party's waiver of any breach or failure to enforce any of the terms, covenants, conditions or other provisions of the Contract Documents at any time shall not in any way affect, limit, modify or waive that party's right thereafter to enforce or compel strict compliance with every term, covenant, condition or other provision hereof, any course of dealing or custom of the trade or oral representations notwithstanding.

### 13.11 Patents

Fees or claims for any patented invention, article or arrangement that may be used upon or in any manner connected with performance of the Work or any part thereof shall be included in the Bid price for doing the Work. Contractor shall defend, indemnify and hold harmless City and each of its officers, employees, consultants (including without limitation Consulting Engineer) and agents, including, but not limited to, the Board and each City's Representative, from all damages, claims for damages, costs or expenses in law or equity, including attorney's fees, arising from or relating to any claim that any article supplied or to be supplied under the Contract Documents infringes on the patent rights, copyright, trade name, trademark, service mark, trade secret or other intellectual property right of any person or persons or that the person or entity supplying the article does not have a lawful right to sell the same. Such costs or expenses for which Contractor agrees to indemnify and hold harmless the above indemnities include but are not limited to any and all license fees, whether such fees are agreed by any indemnitee or ordered by a court or administrative body of any competent jurisdiction.

### 13.12 Substitution For Patented And Specified Articles

Except as noted specifically in Specifications, whenever in Specifications, material or process is designated by patent or proprietary name or by name of manufacturer, such designation shall be deemed to be used for purpose of facilitating description of material and process desired, and shall be deemed to be followed by the words "or equal" and Contractor may offer any substitute material or process that Contractor considers equal in every respect to that so designated and if material or process offered by Contractor is, in opinion of City, equal in every respect to that so designated, its use will be approved. However, Contractor may utilize this right only by timely submitting Document 00660 (Substitution Request Form) as provided in Document 00200 (Instructions to Bidders). A substitution will be approved only if it is a true "equal" item in every aspect of its design and quality, including but not limited to its dimensions, weights, service requirements, durability, functioning, impact on contiguous construction elements, overall schedule and design.

### 13.13 Interest Of Public Officers

No representative, officer, or employee of City, no member of the governing body of the locality in which the Project is situated, no member of the locality in which City was activated, and no other public official of such locality or localities who exercises any functions or responsibilities with respect to the Project, during the tenure of the official or for one year thereafter, shall, as principal, agent, attorney or otherwise, be directly or indirectly interested, in the Contract Documents or the proceeds thereof.

### 13.14 Limit Of Liability

CITY, AND EACH OF ITS OFFICERS, BOARD MEMBERS, EMPLOYEES, CONSULTANTS (INCLUDING WITHOUT LIMITATION CONSULTING ENGINEER) AND AGENTS INCLUDING, BUT NOT LIMITED TO, AND ENGINEER EACH OTHER CITY REPRESENTATIVE SHALL HAVE NO LIABILITY TO CONTRACTOR FOR SPECIAL, CONSEQUENTIAL, OR INCIDENTAL DAMAGES, EXCEPT TO THE LIMITED EXTENT THAT THESE CONTRACT DOCUMENTS OR APPLICABLE PUBLIC CONTRACTING STATUTES MAY SPECIFY THEIR RECOVERY.

### 13.15 Severability

Any provisions or portions thereof of Contract Documents that are prohibited by, unlawful, or unenforceable under any applicable law of any jurisdiction shall as to such jurisdiction be ineffective without affecting other provisions or portions thereof in the Contract Documents.

## 14. MODIFICATIONS OF CONTRACT DOCUMENTS

### 14.1 Alterations, Modifications And Force Account Work

14.1.A. No modification or deviation from the Drawings and Specifications will be permitted except by written Contract Modification.

14.1.B. City may, without notice to the sureties, make alterations, deviations, additions to, or deletions from Contract Documents; increase or decrease the quantity of any item or portion of the Work; expand, contract or otherwise change the Contract Time; delete any item or portion of the Work; and require extra Work. Contractor shall perform such Work under applicable provisions of the Contract Documents, unless specifically provided otherwise at the time the change is ordered. In the case of any ordered extra Work, Owner reserves the right to furnish all or portions of associated labor, material, and equipment, which Contractor shall accept and use without payment for costs, markup, profit, or otherwise for such City-furnished labor, materials, and equipment.

14.1.C. Changes affecting the Contract Time or Contract Sum of the Work shall be set forth in a written Change Order that shall specify:

1. The Work performed in connection with the change to be made;
2. The amount of the adjustment of the Contract Sum, if any, and the basis for compensation for the Work ordered; and
3. The extent of the adjustment in the Contract Time, if any.

14.1.D. A Change Order will become effective when signed by City. If City exercises its right to decide disputed issues pertaining to changed Work as set forth in Articles 12 and 14 of this Document 00700, then the resulting Change Order

shall be effective when signed by City, notwithstanding that Contractor has not signed it.

14.1.E. Changes not affecting the Contract Time or Contract Sum of the Work, in City's discretion, may be set forth in a written RFI-Reply executed by City. Execution of such an RFI-Reply constitutes Contractor's agreement to make the specified change without change to the Contract Sum or the Contract Time.

14.1.F. Changes or deviations from Contract Documents affecting the Contract Time or Contract Sum of the Work shall not be made without the authority of an effective Change Order or Construction Change Directive as provided in Section 01250 (Modification Procedures), except in cases of emergency discussed in Article 16 of this Document 00700.

14.1.G. If changes ordered in design, workmanship or materials are of such a nature as to increase or decrease the cost of any part of the Work, the price fixed in the Contract Documents shall be increased or decreased by the amount that Contractor and City may agree upon as a reasonable and proper allowance for the cost increase or decrease. If an agreement cannot be reached, then City will reach a determination, which shall be final, subject to Contractor's rights under Article 12 of this Document 00700. In all cases Contractor shall perform the changed Work as directed by City subject to Contractor's rights under Article 12 of this Document 00700.

14.1.H. Contractor shall, upon City's request, permit inspection of the original unaltered Bid estimate, subcontract agreements, purchase orders relating to the change, and documents substantiating all costs associated with its cost proposal or claims arising from changes in the Work.

14.1.I. Changes in the Work made pursuant to this Article 14 and extensions of Contract Time necessary by reason thereof shall not in any way release the guarantees and warranties given by Contractor pursuant to provisions of the Contract Documents, nor shall such changes in the Work relieve or release the Sureties of bonds executed pursuant to said provisions. The Sureties, in executing such bonds, shall be deemed to have expressly agreed to any such change in the Work and to any extension of time made by reason thereof.

14.1.J. Procedures for Modifications of Contract Documents and for calculating the cost of extra Work are given in Section 01250 (Modification Procedures). Regarding delay and impact costs of any nature, Contractor may not seek delay compensation for on-Site or off-Site costs based on formulas, e.g., "Eichlay" or other formula. Rather, Contractor shall prove actual costs resulting from such delays. If Contractor requests compensation for delay to the construction, then Contractor shall prove and document actual costs plus markup per the cost categories and procedures in Section 01250 (Modification Procedures) in order to request, claim or prove compensation for delay.

14.1.K. Change Orders in excess of City's approved limit must be approved by the City Council and a performance bond rider covering the changed Work executed before proceeding with the changed Work. Contractor is charged with knowledge of City's approved Change Order limits and procedures in effect at the applicable time.

## 15. TIME ALLOWANCES

### 15.1 Time Allowances For Performance Of Contract Documents

15.1.A. When Contractor and City have signed the Contract Documents, City will serve a Notice to Proceed upon Contractor to that effect, either by depositing notice in a post office or post office box regularly maintained by United States Postal Service in a pre-paid wrapper directed to Contractor at legal address or (at City's option) by delivery by other means at legal address

15.1.B. The start date for Contract Time shall be on the date indicated in the applicable Notice to Proceed. If no date is indicated, the start date for Contract Time shall be the fifth ($5^{th}$) day from the date that Contractor receives, by hand delivery or facsimile transmission, City's written Notice to Proceed, unless the Notice to Proceed is served by mail only, in which case the start date for Contract Time shall be the fifth ($5^{th}$) day following the mailing date. The total number of days for completion of the Work under the Contract Documents shall be as provided in Document 00520 (Agreement).

### 15.2 Entitlement to Change Of Contract Time

15.2.A. The Contract Time may only be changed by Change Order or by Contract Modification, and all time limits stated in the Contract Documents are of the essence of Contract Documents.

15.2.B. The Contract Time will be adjusted in an amount equal to the time lost due to:

1. Changes in the Work ordered by City;
2. Acts or neglect by City, Engineer, any City's Representative, utility owners or other contractors performing other work, provided that Contractor has fully and completely performed its responsibilities under the Contract Documents; or
3. Fires, floods, epidemics, abnormal weather conditions beyond the parameters otherwise set forth in this paragraph 15.2, earthquakes, civil or labor disturbances, strikes or acts of God, provided damages resulting therefrom are not the result of Contractor's failure to protect the Work as required by Contract Documents.

15.2.C. The Contract Time shall not be extended for any cause identified in paragraph 15.2.B above, however, unless:

1. Contractor actually has been prevented from completing any part of the Work within the Contract Time due to delay that is beyond Contractor's control and due to reasons for which Contractor is not responsible (delays attributable to and within the control of a Subcontractor, or its subcontractors, or supplier shall be deemed to be delays within the control of Contractor);
2. A claim for delay is made as provided herein; and
3. Contractor submits a Time Impact Evaluation as required under Section 01320 (Progress Schedules and Reports) that demonstrates actual delay to critical Work activities that actually delay the progress of the Work in the amount of time requested.

15.2.D. Where Contractor is prevented from completing any part of the Work within the Contract Time due to delay beyond the control of both City and Contractor (including, but not limited to, adverse weather of all types and acts of other contractors or utilities), an extension of Contract Time, in an amount equal to the time lost due to such delay (without compensation), shall be Contractor's sole and exclusive remedy for such delay.

15.2.E. Delays due to abnormal or adverse weather conditions will not be allowed for weather conditions that fall within the parameters listed in this paragraph 15.2.E. Adverse weather delays may be allowed only if the number of workdays of adverse weather exceeds these parameters on a monthly basis and Contractor proves that adverse weather actually caused delays. Contractor shall give written notice of intent to claim an adverse weather day within one (1) day of the adverse weather day occurring. Rain parameters are as follows, pro-rated in the individual month Contractor starts and finishes Work:

January, [6]; February, [6]; March, [5]; April, [3]; May, [1]; June, [0]; July, [0]; August, [0]; September, [0]; October, [2]; November, [4]; and December, [5].

In order to qualify as an adverse weather delay with respect to the foregoing parameters, daily rainfall must exceed .1 of an inch or more at the Livermore, California station, as measured by the National Oceanic & Atmospheric Administration, and Contractor shall prove that the rain actually caused delay as set forth in paragraph 15.2.G of this Document 00700.

15.2.F. Contractor shall include the foregoing rain parameters as a monthly activity in its progress schedule. As Work on the critical path is affected by rain, Contractor shall notify City and request that the days be moved to the affected activities. Any adverse weather days remaining shall be considered Project float.

15.2.G. Adverse weather delay for rain shall be recognized for the actual period of time Contractor proves it was delayed by rain exceeding the specified parameters. For example, and not by way of limitation, if rain exceeding the specified parameters does not in fact delay Contractor's progress on the critical path, then no time extension shall be recognized; and conversely, if Contractor proves that rain exceeding the specified parameters causes delay to Contractor for a period longer than the number of rain days incurred (e.g., if it rains during grading work) , then Contractor shall be entitled to a time extension equal to the actual period of such delay.

15.2.H. Contractor shall take reasonable steps to mitigate potential weather delays, such as dewatering the Site, and covering Work and material that could be affected adversely by weather. Failure to do so shall be cause for City to not grant a time extension due to adverse weather, where Contractor could have avoided or mitigated the potential delay by exercising reasonable care.

**15.3 Notice Of Delay**

Within seven (7) days of the beginning of any delay, Contractor shall notify City in writing, by submitting a notice of potential claim, of all anticipated delays resulting from

the delay event in question. Any request for extension of time shall be accompanied by Contractor's written statement that the adjustment claimed is the entire adjustment to which the claimant is entitled as a result of the occurrence of said event, and shall include a written schedule document that demonstrates delay to the critical path using a Time Impact Evaluation as specified in Section 01320 (Progress Schedules). City will determine all claims and adjustments in the Contract Time. No claim for an adjustment in the Contract Time will be valid and such claim will be waived if not submitted in accordance with the requirements of this paragraph 0.

**15.4 Time Extensions and/or Damages Entitlements For Delays**

15.4.A. Contractor may receive a time extension and be compensated for delays caused directly and solely by City.

15.4.B. Contractor may receive a time extension without compensation for delays resulting in whole or in part from causes beyond the reasonable control of Contractor and City, e.g. adverse weather conditions exceeding Contract Documents parameters, earthquakes, Acts of God and epidemics. In such cases, a time extension without compensation shall constitute Contractor's sole and exclusive remedy for such delays.

15.4.C. Contractor shall not be entitled to any time extension or compensation including, but not limited to, extended field or home office overhead, field supervision, costs of capital, interest, escalation charges, acceleration costs or other impacts for any delays caused in whole or in part by Contractor's failure to perform its obligations under the Contract Documents, or during periods of delay concurrently caused by Contractor and either City or others.

15.4.D. Contractor shall not be entitled to damages for delay to the Work caused by the following reasons:

1. City's right to sequence the Work in a manner which would avoid disruption to City's tenants and their contractors or other prime contractors and their respective subcontractors, exercised as a result of Contractor's failure to perform its cooperation and coordination responsibilities required by Contract Documents; City's enforcement of any government act or regulation; or the provisions of the Contract Documents;

2. For changed Site conditions that are beyond the parties' contemplation, except that City may approve direct costs associated with unknown conditions (but not costs or damages which result from such delays); and

3. Extensive requests for clarifications to Contract Documents or Contract Modifications thereto, provided such clarifications or Contract Modifications are processed by City or its consultants in a reasonable time commensurate with Contract Documents requirements.

**15.5 Liquidated Damages**

15.5.A. Time is of the essence. Execution of Contract Documents by Contractor shall constitute acknowledgement by Contractor that Contractor understands, has ascertained and agrees that City will actually sustain damages in the amount fixed in the Contract Documents for each and every Day during which completion of Work required is delayed beyond expiration of time fixed for completion or extensions of time allowed pursuant to provisions hereof. Contractor and City agree that specified measures of liquidated damages shall

be presumed to be the damages actually sustained by City as defined below , and that because of the nature of the Project, it would be impracticable or extremely difficult to fix the actual damages.

15.5.B. Liquidated damages shall be considered not as a penalty but as agreed monetary damage sustained by City for increased Project administration expenses, including extra inspection, construction management and architectural and engineering expenses related to the Project and Contract Documents because Contractor failed to perform and complete Work within time fixed for completion or extensions of time allowed pursuant to provisions hereof. Liquidated damages shall not be deemed to include within their scope additional damages or administrative costs arising from Defective Work, lost revenues, interest expenses, cost of completion of the Work, cost of substitute facilities, claims and fines of regulatory agencies, damages suffered by others or other forms of liability claimed against City as a result of delay (e.g., delay or delay related claims of other contractors, subcontractors or tenants), and defense costs thereof. Contractor shall be fully responsible for the actual amount of any such damages it causes, in addition to the liquidated damages otherwise due City.

15.5.C. City may deduct from any money due or to become due to Contractor subsequent to time for completion of entire Work and extensions of time allowed pursuant to provisions hereof, a sum representing then-accrued liquidated damages. Should Contractor fall behind the approved Progress Schedule, City may deduct liquidated damages based on its estimated period of late completion. City need not wait until Final Completion to withhold liquidated damages from Contractor's progress payments. Should money due or to become due to Contractor be insufficient to cover aggregate liquidated damages due, then Contractor forthwith shall pay the remainder of the assessed liquidated damages to City.

## 16. WORKING CONDITIONS AND PREVAILING WAGES

### 16.1 Use Of Site/Sanitary Rules

16.1.A. All portions of the Work shall be maintained at all times in neat, clean and sanitary condition. Contractor shall furnish toilets for use of Contractor's and Subcontractors' employees on the Site where needed, and their use shall be strictly enforced. All toilets shall be properly secluded from public observation, and shall be located, constructed and maintained subject to City's approval.

16.1.B. Contractor shall confine construction equipment, the storage of materials and equipment and the operations of workers to the Site and land areas identified in and permitted by Contract Documents and other land and areas permitted by applicable laws and regulations, rights of way, permits and easements or as designated by City, and shall not unreasonably encumber the premises with construction equipment or other materials or equipment. Contractor shall assume full responsibility for any damage to any such land or area, any improvement located thereon, or to the owner or occupant thereof resulting from the performance of Work.

16.1.C. During the progress of the Work, Contractor shall keep the Site and the Project free from accumulations of waste materials, rubbish and other debris resulting

from the Work. At the completion of the Work, Contractor shall remove all waste materials, rubbish and debris from and about the Site as well as all tools, appliances, construction equipment and machinery and surplus materials. Contractor shall leave the premises clean and ready for occupancy by City at Substantial Completion of Work. Contractor shall restore to original condition all property not designated for alteration by Contract Documents.

16.1.D. Contractor shall not load nor permit any part of any structure or pavement to be loaded in any manner that will endanger the structure or pavement, nor shall Contractor subject any part of Work or adjacent property to stresses or pressures that will endanger it. Contractor shall conduct all necessary existing conditions investigation regarding structural, mechanical, electrical or any other system existing, shall perform Work consistent with such existing conditions, and shall have full responsibility for insufficiencies or damage resulting from insufficiencies of existing systems, equipment or structures to accommodate performing the Work.

**16.2 Protection Of Work, Persons, Property And Operations**

16.2.A. Contractor shall be responsible for initiating, maintaining and supervising all safety precautions and programs in connection with Work. Contractor shall comply with all safety requirements specified in any safety program established by City, or required by state, federal or local laws and ordinances. Contractor shall be responsible for all damage to Work, property or structures, all injuries to persons, and all damage and interruptions to City's operations, arising from the performance of Work of the Contract Documents. Except as otherwise expressly approved by City in writing, Contractor shall at all times perform all Work in a manner which does not interrupt, damage or otherwise adversely impact any existing City facilities or operations.

16.2.B. Contractor shall comply with all applicable laws and regulations of any public body having jurisdiction for safety of persons or property or to protect them from damage, injury or loss; and shall erect and maintain all necessary safeguards for such safety and protection. Contractor shall notify owners of adjacent property and of Underground Facilities and utility owners when prosecution of the Work may affect them, and shall cooperate with them in the protection, removal, relocation and replacement of their property.

16.2.C. Contractor shall remedy all damage, injury, loss or interruption to any property or operations referred to in paragraph 16.2.A of this Document 00700, caused, directly or indirectly, in whole or in part, by Contractor, any Subcontractor, supplier, or any other person or organization directly or indirectly employed by any of them to perform or furnish any Work or anyone for whose acts any of them may be liable. Contractor's duties and responsibility for safety and for protection of Work shall continue until such time as all the Work is completed and Final Acceptance of the Work. City and its agents do not assume any responsibility for collecting any indemnity from any person or persons causing damage to Contractor's Work.

16.2.D. Contractor shall designate a qualified and experienced safety representative at the Site whose duties and responsibilities shall be the prevention of accidents and the maintaining and supervising of safety precautions and programs.

16.2.E. City may, at its option, retain such moneys due under the Contract Documents as City deems necessary until any and all suits or claims against Contractor for injury to persons, property or operations shall be settled and City receives satisfactory evidence to that effect.

### 16.3 Responsibility For Safety And Health

16.3.A. Contractor shall ensure that its and each tier of Subcontractors' employees, agents and invitees comply with applicable health and safety laws while at the Site. These laws include the Occupational Safety and Health Act of 1970 and rules and regulations issued pursuant thereto, and City's safety regulations as amended from time to time. Contractor shall comply with all City directions regarding protective clothing and gear.

16.3.B. Contractor shall be fully responsible for the safety of its and its Subcontractors' employees, agents and invitees on the Site. Contractor shall notify City, in writing, of the existence of hazardous conditions, property or equipment at the Site that are not under Contractor's control. Contractor shall be responsible for taking all the necessary precautions against injury to persons or damage to the property of Contractor, Subcontractors or persons from recognized hazards until the responsible party corrects the hazard.

16.3.C. Contractor shall confine all persons acting on its or its Subcontractors' behalf to that portion of the Site where Work under the Contract Documents is to be performed: City designated routes for ingress and egress thereto and any other City designated area. Except those routes for ingress and egress over which Contractor has no right of control, within such areas, Contractor shall provide safe means of access to all places at which persons may at any time have occasion to be present.

### 16.4 Emergencies

In emergencies affecting the safety or protection of persons or Work or property at the Site or adjacent thereto, Contractor, without special instruction or authorization from City, is obligated to act to prevent threat and damage, injury or loss, until directed otherwise by City. Contractor shall give City prompt written notice if Contractor believes that any significant changes in Work or variations from Contract Documents have been caused thereby. If City determines that a change in the Contract Documents is required because of the action taken by Contractor in response to such an emergency, a Change Order or Construction Change Directive will be issued to document the consequences of such action.

### 16.5 Use Of Roadways And Walkways

Contractor shall not unnecessarily interfere with use of any roadway, walkway or other facility for vehicular or pedestrian traffic. Before beginning any interference and only with City's prior concurrence, Contractor may provide detour or temporary bridge for traffic to pass around or over the interference, which Contractor shall maintain in satisfactory condition as long as interference continues. Unless otherwise provided in the Contract Documents, Contractor shall bear the cost of these temporary facilities.

### 16.6 Nondiscrimination

No person or entity shall discriminate in the employment of persons upon public works because of race, religious creed, color, national origin, ancestry, physical disability, mental disability, medical condition, marital status, sexual preference, or gender of such

persons, except as provided in Section 12940 of the Government Code. Every contractor for public works violating the provisions of Section 1735 of the Labor Code is subject to all the penalties imposed for a violation of Chapter 1, Part 7, Division 2 of the Labor Code.

### 16.7 Prevailing Wages

16.7.A. Contractor shall pay to persons performing labor in and about Work provided for in the Contract Documents an amount equal to or more than the general prevailing rate of per diem wages for (1) work of a similar character in the locality in which the Work is performed and (2) legal holiday and overtime work in said locality. The per diem wages shall be an amount equal to or more than the stipulated rates contained in a schedule that has been ascertained and determined by the Director of the State Department of Industrial Relations and City to be the general prevailing rate of per diem wages for each craft or type of workman or mechanic needed to execute this Contract. Contractor shall also cause a copy of this determination of the prevailing rate of per diem wages to be posted at each Site. ]

16.7.B. Contractor shall forfeit, as a penalty to City, Fifty Dollars ($50.00) for each laborer, workman, or mechanic employed in performing labor in and about the Work provided for in the Contract Documents for each Day, or portion thereof, that such laborer, workman or mechanic is paid less than the said stipulated rates for any work done under the Contract Documents by him or her or by any Subcontractor under him or her, in violation of Articles 1 and 2 of Chapter 1 of Part 7 of Division II of the California Labor Code. The sums and amounts which shall be forfeited pursuant to this paragraph 16.7.B and the terms of the Labor Code shall be withheld and retained from payments due to Contractor under the Contract Documents, pursuant to this Document 00700 and the Labor Code, but no sum shall be so withheld, retained or forfeited except from the final payment without a full investigation by either the State Department of Industrial Relations or by City. The Labor Commissioner pursuant to Labor Code Section 1775 shall determine the final amount of forfeiture.

16.7.C. Contractor shall insert in every subcontract or other arrangement which Contractor may make for performance of work or labor on Work provided for in the Contract, provision that Subcontractor shall pay persons performing labor or rendering service under subcontract or other arrangement not less than the general prevailing rate of per diem wages for work of a similar character in the locality in which the Work is performed, and not less than the general prevailing rate of per diem wages for holiday and overtime work fixed in the Labor Code.

16.7.D. Contractor stipulates that it shall comply with all applicable wage and hour laws, including without limitation Labor Code Section 1813.

### 16.8 Environmental Controls

Contractor shall comply with all rules, regulations, ordinances, and statutes that apply to any work performed under the Contract Documents including, without limitation, any toxic, water and soil pollution controls and air pollution controls specified in Government Code, Section 11017. Contractor shall be responsible for insuring that Contractor's employees, Subcontractors and the public are protected from exposure to airborne hazards or contaminated water, soil or other toxic materials used during or generated by activities on the Site or associated with the Project.

### 16.9 Shoring Safety Plan

16.9.A. At least five (5) days in advance of excavating any trench five feet or more in depth, Contractor shall submit to City a detailed plan showing the shoring, bracing and sloping design and other provisions to be made for worker protection from the hazard of caving ground during the excavation, as required by Labor Code Section 6705. A civil or structural engineer registered in California shall prepare and sign any plan that varies from the shoring system standards established by the State Construction Safety Orders.

16.9.B. During the course of Work, Contractor shall be responsible for determining where sloping, shoring, and/or bracing is necessary and the adequacy of the design, installation, and maintenance of all shoring and bracing for all excavation, including any excavation less than five (5) feet in depth. Contractor will be solely responsible for any damage or injuries that may result from excavating or trenching. City's acceptance of any drawings showing the shoring or bracing design or work schedule shall not relieve Contractor of its responsibilities under this paragraph 16.9.

END OF DOCUMENT

THIS PAGE

INTENTIONALLY

LEFT BLANK

# DOCUMENT 00800
# SUPPLEMENTARY CONDITIONS

## 1. SUMMARY

This document includes requirements that supplement the paragraphs of Document 00700 (General Conditions).

## 2. SUPPLEMENTS

A. Supplement to Paragraph 15 (Time Allowances)

1. A new Paragraph 15.2.l, reading in full as follows, is hereby added

   15.2.l. See Section 01100 (Summary) paragraph 1.7 for certain limitations on Contractor's rights under this paragraph 15.2.

END OF DOCUMENT

THIS PAGE

INTENTIONALLY

LEFT BLANK

# DOCUMENT 00805

# SUPPLEMENTARY CONDITIONS - HAZARDOUS MATERIALS

## 1. SUMMARY

A. This Document 00805 includes requirements that supplement the paragraphs of Document 00700 (General Conditions) as they apply to location, removal, remediation, disposal, and abatement of hazardous materials and hazardous waste.

## 2. SUPPLEMENTS

A. Supplement to paragraph 2.1, Investigation Prior to Bidding

1. Add to the end of paragraph 2.1.B a new paragraph that reads:

4. Matters Shown in Hazardous Materials Surveys for Informational Purposes: Reference is made to Document 00335 (Hazardous Materials Surveys) for hazardous material surveys included with the Contract Documents and use of data therein. These materials are not Contract Documents and, except for any "technical data" regarding the location of hazardous materials, as limited in Document 00335 (Hazardous Materials Surveys), Contractor shall not in any manner rely on the information in these materials. Subject to the foregoing, Contractor shall make its own independent investigation of all conditions affecting the Work and shall not rely on information provided by City.

B. Supplement to paragraph 5.7, Precedence of Documents

1. Add to the end of paragraph 5.7 a new paragraph that reads:

5.7.E Should any provision or requirement of any Contract Document conflict with another provision or requirement in the Contract Documents on subject matters of hazardous waste abatement, clean up, disposal, or required safety standards or methods, then the most stringent provision or requirement shall control.

C. Supplement to paragraph 7.2, Means and Methods of Construction

1. Number the current paragraph 7.2.A and add to the end of paragraph 7.2 a new paragraph that reads:

7.2.B Nothing contained in these Contract Documents or inferable there from shall be deemed or construed to:

1) Make Contractor the agent, servant, or employee of City; or

2) Create any partnership, joint venture, or other association between City and Contractor.

D. Supplement to paragraph 8, Control of the Work

1. Add to the end of paragraph 8.2 new paragraphs that read:

8.2.F City shall exercise administration on Contract Documents. City has employed a consultant to assist in the preparation of the hazardous materials abatement contract specifications. City reserves the right to assign or delegate to this consultant, or any other consultant ("Consultant") any or all Engineer's responsibilities under Contract

Documents or alternatively to act as City's representative. Contractor will be notified in writing of any such delegation.

8.2.G Cooperate with Consultant as directed by City. Consultant's duties may include observing Contractor's health and safety program and practices, observing the abatement construction activities, observing the extent of material removed from each job site, reviewing payment requests, reviewing reports required by governmental or quasi-governmental agencies or Contract Documents, and providing clearance tests after abatement is completed. No action, omission to act, approval, or failure to advise Contractor as to any matter by Consultant shall in any way relieve Contractor from its responsibility for the performance of Work in accordance with Contract Documents and applicable law. Unless directed otherwise in writing by City, do not communicate directly with Consultant and shall direct all communications to City.

E. Supplement to paragraph 9, Warranty, Guaranty, and Inspection of Work

1. Add to the end of paragraph 9.1 a new paragraph that reads:

9.1.D Additional Warranties and Representations:

1) Contractor represents and warrants that it, its employees and its Subcontractors and their employees, shall at all times have the required levels of familiarity with the Site and the Work, training and ability to comply fully with all applicable law and Contract Documents requirements for safe and expeditious performance of the Work, including whatever training is or may be required regarding the activities to be performed (including, but not limited to, all training required to adequately address the actual or potential dangers of Contract performance).

2) Contractor represents and warrants that it, its employees and its subcontractors and their employees, shall at all times have and maintain in good standing any and all certifications and licenses required by applicable federal, state, and other governmental and quasi-governmental requirements applicable to the Work.

3) Contractor represents and warrants that it has studied carefully all requirements of the Contract Documents regarding procedures for demolition, hazardous waste abatement, or safety practices, specified in the Contract Documents, and prior to submitting its Bid, has either:

(a) Verified to its satisfaction that the specified procedures are adequate and sufficient to achieve the results intended by Contract Documents; or

(b) By way of approved "or equal" request or request for clarification and written Addenda, secured changes to the specified procedures sufficient to achieve the results intended by Contract Documents.

4) Contractor accepts the risk that any specified procedure will result in a completed Project in full compliance with all Contract Documents requirements.

2. Number the current paragraph 9.6.A and add to the end of paragraph 9.6 a new paragraph that reads:

   9.6.B City reserves the right, in its sole discretion, to conduct air monitoring, earth monitoring, work monitoring, and any other tests (in addition to testing required under Document 00520 [Agreement] or applicable Law), to monitor Contract requirements of safe and statutory compliant work methods and (where applicable) safe re-entry level air standards under state and federal Law upon completion of the Work, and compliance of the Work with periodic and final inspection of public and quasi-public entities having jurisdiction.

   1) Contractor acknowledges that City also has the right to perform, or cause to be performed, various activities and tests including, but not limited to, pre-abatement, during abatement and post-abatement air monitoring, provided that City shall have no obligation to perform said activities and tests, and that a portion of said activities and tests may take place prior to the completion of Work by Contractor. In the event City elects to perform these activities and tests, afford City ample access to the Site and all areas of the Work as may be necessary for the performance of these activities and tests. Include the potential impact of these activities for tests by City in the Contract Sum and the scheduled completion date.

   2) Notwithstanding City's rights granted by this paragraph 9, Contractor may be required to retain its own industrial hygiene consultant and shall have primary responsibility for collecting samples and performing all applicable, relevant, or appropriate activities and tests including, but not limited to, pre-abatement, during abatement, and post-abatement air monitoring, required by Contract Documents, applicable Law, or both, and City reserves the right to request documentation of all such activities and tests performed by Contractor relating to Work.

F. Supplement to paragraph 11.2, Cost Data

1. Add to the end of paragraph 11.2 new paragraphs that read:

   11.2.E Obtain and maintain and shall furnish to City on completion of Work or at any other time requested by City, all necessary, permits, licenses, approvals, authorizations, notifications, training certificates, respirator certificates, reports, correspondence, tests results, air monitoring certificates, forms, medical records, medical certificates, notes and photographs of Work conditions, approved shipping and disposal facility receipts, manifests, and all other documentation required by Contract Documents or applicable Law, or both.

   11.2.F Provide City with copies of each such document as it is generated and shall, as a condition to final payment, provide City with a complete set of such documents (bound, organized, and indexed) at the conclusion of Work. Keep and maintain in retrievable files true and correct copies of all such documents for a period of not less than 30 years after Final Completion of the Work. City shall have the right to inspect or

photocopy these records and, if Contractor should cease business operations, then it shall furnish these records to City.

G. Supplement to paragraph 13, Legal and Miscellaneous

1. Add to the end of paragraph 13.1 new paragraphs that read:

13.1.C Compliance with Laws. Contractor represents that it is familiar with and shall comply with all Laws applicable to the Work or completed Work including, but not limited to all Laws relating to:

1) Protection of the public health, welfare, and environment;

2) Generation, processing, treatment, handling, storage, transport, disposal, destruction, or other management of asbestos, PCB, lead, petroleum-based products, or other hazardous materials of any kind; or

3) Protection of environmentally sensitive areas such as wetlands.

13.1.D Disposal. Contractor has the sole responsibility for determining current waste storage, handling, and transportation and disposal regulations for the Site and for each waste disposal facility. Contractor shall comply fully at Contractor's sole cost and expense with these regulations and any applicable Law. City may, but is not obligated to, require submittals with this information for it to review consistent with Contract Documents.

13.1.E Tracking. Contractor shall develop and implement a system acceptable to City to track hazardous waste from the Site to disposal, including appropriate "Hazardous Waste Manifests" on the applicable EPA form , so that City may track the volume of waste Contractor puts in each landfill and receive from each landfill a certificate of receipt.

13.1.F Facilities. Contractor shall provide City with the name and address of each waste disposal facility prior to any disposal, and City shall have the express right to reject any proposed disposal facility. Contractor may not use any disposal facility to which City has objected. Contractor shall document actual disposal or destruction of waste at a designated facility by completing a disposal certificate or certificate of destruction and forwarding the original to the Contractor (with a copy to City).

2. Number the text of current paragraph 13.2 paragraph 13.2.A and add to the end of paragraph 13.2 new paragraphs that read:

13.2.B Before performing any of the Work, and at such other times as may be required by applicable Law, deliver all requisite notices and obtain the approval of all governmental and quasi-governmental authorities having jurisdiction over the Work. Submit evidence satisfactory to City that Contractor and any disposal facility (a) have obtained all required permits, approvals and the like in a timely manner both prior to commencement of the Work and thereafter as and when required by applicable Law, and (b) are in compliance with all such permits, approvals and the like. For example, before commencing any work in connection with the Work involving asbestos-containing materials or PCB subject to regulation, Contractor shall provide the required notice of intent to renovate or demolish to the appropriate state or federal agency having jurisdiction, by certified mail, return receipt required, or by some

other method of transmittal for which a return receipt is obtained, and to send a copy of that notice to City. Contractor shall not conduct any Work involving asbestos-containing materials or PCB unless Contractor has first confirmed that the appropriate agency having jurisdiction is in receipt of the required notification. All permits, licenses, and bonds required by governmental or quasi-governmental authorities, fees, deposits, tap fees, offsite easements, and asbestos and PCB disposal facilities necessary for the prosecution of the Work shall be procured and paid for by Contractor. Contractor shall give all notices and comply with the Law bearing on the conduct of the Work as drawn and specified. If Contractor observes or reasonably should have observed that Drawings and Specifications and other Contract Documents are at variance therewith, it shall be responsible for promptly notifying City in writing of such fact. If Contractor performs any Work contrary to Law without such notice to City, Contractor shall bear all costs arising there from.

In the case of any permits or notices held in City's name or of necessity to be made in City's name, City will cooperate with Contractor in securing the permit or giving the notice, but Contractor shall prepare for City's review and execution upon approval, all necessary applications, notices, and other materials.

3. Add to the end of paragraph 13.3 a new paragraph that reads:

   13.3.G To the greatest extent permitted by Law, the indemnities and limitation of liability expressed throughout the Contract Documents apply with equal force and effect to any claims or liabilities imposed or existing by virtue of the removal, abatement, and disposal of hazardous waste. This includes liabilities connected to the selection and use of a waste disposal facility, personal injury, property damage, loss of use of property, damage to the environment or natural resources, or "disposal" and "release" of materials associated with the Work (as defined in 42 U.S.C. Section 9601 *et seq*).

4. Add to the end of paragraph 13.7 a new paragraph that reads:

   13.7.G Notwithstanding anything in paragraph 13.7 to the contrary, City shall have an absolute right to terminate for default immediately without notice and without an opportunity to cure should Contractor knowingly or recklessly commit a material breach of the terms of the Contract Documents or the Law on any matter involving the exposure of persons or property to hazardous waste. If the breach exposing persons or property to hazardous waste is due solely to an ordinary, unintentional and non-reckless failure to exercise reasonable care, then the procedures in paragraph 13.7 for termination for default shall apply without modification.

H. Supplement to paragraph 16.2, Protection of Work, Persons, and Property

1. Add to the end of paragraph 16.2 a new paragraph that reads:

   16.2.F Perform safe, expeditious, and orderly work in accordance with the best practices and the highest standards in the hazardous waste abatement, removal, and disposal industry, the Law (as herein defined), and the

Contract Documents including, but not limited to, all responsibilities relating to the preparation and return of waste shipment records, all requirements of the Law, delivering of all requisite notices, and obtaining all necessary governmental and quasi-governmental approvals.

END OF DOCUMENT

# DOCUMENT 00821

# INSURANCE

INSURANCE COVERAGE REQUIREMENTS

Without limiting the Contractor's indemnification of the City, and prior to commencing any of the Services required under this Agreement, the Contractor shall purchase and maintain in full force and effect, at its sole cost and expense, the following insurance policies with at least the indicated coverages, provisions and endorsements:

A. COMMERCIAL GENERAL LIABILITY INSURANCE

1. Commercial General Liability Insurance policy which provides coverage at least as broad as Insurance Services Office form CG 00 01. Policy limits are subject to review, but shall in no event be less than, the following:

   $3,000,000 Each occurrence

   $3,000,000 General Aggregate

   $3,000,000 Products/Completed Operations Aggregate

   $3,000,000 Personal Injury

   $3,000,000 Project Aggregate

2. Exact structure and layering of the coverage shall be left to the discretion of Contractor; however, any excess or umbrella policies used to meet the required limits shall be at least as broad as the underlying coverage and shall otherwise follow form.

3. The following provisions shall apply to the Commercial Liability policy as well as any umbrella policy maintained by the Contractor to comply with the insurance requirements of this Agreement:

   a. Coverage shall be on a "pay on behalf" basis with defense costs payable in addition to policy limits;

   b. There shall be no cross liability exclusion which precludes coverage for claims or suits by one insured against another;

   c. Coverage shall apply separately to each insured against whom a claim is made or a suit is brought, except with respect to the limits of liability;

   d. Coverage shall contain no contractors' limitation endorsement limiting the scope of coverage for liability arising from pollution, personal injury, Owners' and Contractors' protective Liability; and

   e. Contractual Liability coverage shall expressly include all liability assumed under this Agreement.

B. BUSINESS AUTOMOBILE LIABILITY INSURANCE

Business automobile liability insurance policy which provides coverage at least as broad as ISO form CA 00 01 with policy limits a minimum limit of not less than two million dollars ($2,000,000) each accident using, or providing coverage at least as broad as, Insurance Services Office form CA 00 01. Liability coverage shall apply to all owned, non-owned and hired autos.

In the event that the Work being performed under this Agreement involves transporting of hazardous or regulated substances, hazardous or regulated wastes and/or hazardous or regulated materials, Contractor and/or its subcontractors involved in such activities shall provide coverage with a limit of five million dollars ($5,000,000) per accident covering transportation of such materials by the addition to the Business Auto Coverage Policy of Environmental Impairment Endorsement MCS90 or Insurance Services Office endorsement form CA 99 48, which amends the pollution exclusion in the standard Business Automobile Policy to cover pollutants that are in or upon, being transported or towed by, being loaded onto, or being unloaded from a covered auto.

C. WORKERS' COMPENSATION

1. Workers' Compensation Insurance Policy as required by statute and employer's liability with limits of at least one million dollars ($1,000,000) policy limit Bodily Injury by disease, one million dollars ($1,000,000) each accident/Bodily Injury and one million dollars ($1,000,000) each employee Bodily Injury by disease.

2. The indemnification and hold harmless obligations of Contractor included in this Agreement shall not be limited in any way by any limitation on the amount or type of damage, compensation or benefit payable by or for Contractor or any subcontractor under any Workers' Compensation Act(s), Disability Benefits Act(s) or other employee benefits act(s).

3. This policy must include a Waiver of Subrogation in favor of the City of Santa Clara, its City Council, commissions, officers, employees, volunteers and agents.

D. POLLUTION LIABILITY

In the event that this contract involves hazardous or regulated wastes and/or hazardous or regulated materials, Contractor and/or its subcontractors shall provide a Contractor's Pollution Legal Liability Insurance policy with coverage limits not less than one million dollars ($1,000,000) each claim in connection with the Work performed under this Contract. All activities contemplated in this agreement shall be specifically scheduled on the policy as "covered operations." Any deductible must be declared to and approved by City. Such policy shall cover, at a minimum, liability for bodily injury, damage to and loss of use of property, and clean–up costs arising from sudden, accidental and gradual pollution and remediation in connection with the Work under this Agreement. Contractor will use its best efforts to have the City, Council, officers, employees and volunteers added as additional insureds under this policy. The following provisions shall apply:

1. The policy shall provide coverage for the hauling of waste from the project site to the final disposal location, including non-owned disposal sites.

2. Products/completed operations coverage shall extend a minimum of 3 years after project completion.

3. Coverage shall be included on behalf of the insured for covered claims arising out of the actions of independent contractors.

4. If the insured is using subcontractors the Policy must include work performed "by or on behalf" of the insured.

5. Policy shall contain no language that would invalidate or remove the insurer's duty to defend or indemnify for claims or suits expressly excluded from coverage. Policy shall specifically provide for a duty to defend on the part of the insurer.

E. COMPLIANCE WITH REQUIREMENTS

All of the following clauses and/or endorsements, or similar provisions, must be part of each commercial general liability policy, and each umbrella or excess policy.

1. Additional Insureds. City of Santa Clara, its City Council, commissions, officers, employees, volunteers and agents are hereby added as additional insureds in respect to liability arising out of Contractor's work for City, using Insurance Services Office (ISO) Endorsement CG 20 10 11 85 or the combination of CG 20 10 03 97 and CG 20 37 10 01, or its equivalent.

2. Primary and non-contributing. Each insurance policy provided by Contractor shall contain language or be endorsed to contain wording making it primary insurance as respects to, and not requiring contribution from, any other insurance which the indemnities may possess, including any self-insurance or self-insured retention they may have. Any other insurance indemnities may possess shall be considered excess insurance only and shall not be called upon to contribute with Contractor's insurance.

3. General Aggregate. The general aggregate limits shall apply separately to Contractor's work under this Agreement providing coverage at least as broad as Insurance Services Office (ISO) Endorsement CG 2503, 1985 Edition, or insurer's equivalent (CGL);

4. Cancellation. Each insurance policy shall contain language or be endorsed to reflect that no cancellation or modification of the coverage provided shall be effective until written notice has been given to City at least thirty (30) days prior to the effective date of such modification or cancellation. In the event of non-renewal, written notice shall be given at least thirty (30) days prior to the effective date of non-renewal.

5. Other Endorsements. Other endorsements may be required for policies other than the commercial general liability policy if specified in the description of required insurance set forth in Sections A through E of this Exhibit C, above.

F. ADDITIONAL INSURANCE RELATED PROVISIONS

Contractor and City agree as follows:

1. Requirements of specific insurance coverage features described in this Agreement shall not be construed to be a limitation of liability on the part of Contractor or any of its subcontractors, nor to relieve any of them of any liability or responsibility under the Contract Documents, as a matter of law or otherwise. Such requirements are not intended by any Party to be limited to providing coverage for the vicarious liability of the City or to the supervisory role, if any, of City. All insurance coverage provided pursuant to this Agreement in any way relating to City is intended to apply to the full extent of the policies involved.

2. Contractor shall maintain all required insurance policies in full force and effect during entire period of performance of the Services under this Agreement of Contract Documents. Contractor shall also keep such insurance in force during warranty and guarantee periods. At time of making application for extension of time, Contractor shall submit evidence that insurance policies will be in effect during requested additional period of time.

3. City reserves the right, at any time during the term of this Agreement to change the amounts and types of insurance required by giving the Contractor thirty (30) days advance written notice of such change. If such change results in substantial additional cost to the Contractor, the City will negotiate in good faith additional compensation proportional to the increased benefit to City.

4. Any type of insurance or any increase of limits of liability not described in this Exhibit which Contractor requires for its own protection or in compliance with applicable statutes or regulations, shall be Contractors' responsibility and at its own expense.

5. No liability insurance coverage provided by Contractor to comply with the terms of this Agreement shall prohibit Contractor, or Contractor's employees, or agents, from waiving the right of subrogation prior to a loss. Contractor waives its right of subrogation against Indemnitees. Any property insurance policies affected by Contractor shall be endorsed to delete the subrogation condition as to indemnitees or shall specifically allow Contractor to waive subrogation prior to a loss. Contractor hereby waives any right of recovery against the indemnitees and agrees to require any subcontractor to do so.

6. Contractor agrees to ensure that subcontractors, and any other party involved with the Services who is brought onto or involved in the performance of the Services by Contractor, provide the same minimum insurance coverage required of Contractor, except as with respect to limits Contractor agrees to monitor and review all such coverage and assumes all responsibility for ensuring that such coverage is provided in conformity with the requirements of this Agreement. Contractor agrees that upon request by City, all agreements with, and insurance compliance documents provided by, such subcontractors and others engaged in the project will be submitted to City for review.

7. Contractor shall cooperate fully with City and Contractor's insurance companies in any safety and accident prevention program and claims handling procedures as established for the performance of Services under this Agreement.

8. All coverage types and limits required under this Agreement are subject to approval, modification and additional requirements by the City, as the need arises. Contractor shall not make any reductions in scope of coverage which may affect City's protection without City's prior written consent.

9. For purposes of applying insurance coverage only, all contracts pertaining to the performance of services will be deemed to be executed when finalized and any activity commences in furtherance of performance under this agreement.

10. Contractor acknowledges and agrees that any actual or alleged failure on the part of City to inform Contractor of non-compliance with any of the insurance requirements set forth in this Agreement in no way imposes any additional obligations on City nor does it waive any of the City's rights under this Agreement or any other regard.

11. Any provision in this Agreement dealing with the insurance coverage provided pursuant to these requirements, is subordinate to and superseded by the requirements contained herein. These insurance requirements are intended to be separate and distinct from any other provision in this Agreement and are intended by the Parties here to be interpreted as such.

12. Contractor agrees to be responsible for ensuring that no contract used by any party involved in any way with the project reserves the right to charge City or Contractor for the cost of additional insurance coverage required by this Agreement. Any such provisions are to be deleted with reference to City. It is not the intent of City to reimburse any third party for the cost of complying with these requirements. There shall be no recourse against City for payment of premiums or other amounts with respect thereto.

13. Contractor agrees to obtain and provide to City evidence of Professional Liability insurance for Architects or Engineers if engaged by Contractor to perform any of the Services required under this Agreement. City shall determine the minimum coverage and policy limits required, after consultation with Contractor.

14. The City acknowledges that some insurance requirements contained in this Agreement may be fulfilled by self-insurance on the part of the Contractor. The Contractor's insurance obligations under this Agreement under may be satisfied in whole or in part by adequately funded self-insurance retention, but only after approval from the City Attorney's Office upon satisfactory evidence of financial capacity.

15. The City reserves the right to withhold payments from the Contractor in the event of material noncompliance with the insurance requirements set forth in this Agreement.

G. EVIDENCE OF COVERAGE

Prior to commencement of any Services under this Agreement, Contractor, and each and every subcontractor (of every tier) shall, at its sole cost and expense, purchase and maintain not less than the minimum insurance coverage with the endorsements and deductibles indicated in this Agreement. Such insurance coverage shall be maintained with insurers, and under forms of policies, satisfactory to City and as described in this Agreement. Contractor shall file with the City all certificates and endorsements for the required insurance policies for City's approval as to adequacy of the insurance protection.

H. Evidence of Compliance

Contractor or its insurance broker shall provide the required proof of insurance compliance, consisting of Insurance Services Office (ISO) endorsement forms or their equivalent <u>and</u> the ACORD form 25-S certificate of insurance (or its equivalent), evidencing all required coverage shall be delivered to City, or its representative as set forth below, at or prior to execution of this Agreement. Upon City's request, Contractor shall submit to City copies of the actual insurance policies or renewals or replacements. Unless otherwise required by the terms of this Agreement, all certificates, endorsements, coverage verifications and other items required to be delivered to City pursuant to this Agreement shall be mailed to:

**Silicon Valley Power – City of Santa Clara**

c/o Insurance Data Services - Insurance Compliance
P.O. 12010-S2
Hemet, CA 92546-8010
Telephone: (951)766-2280; or
Fax: (951)766-2299

or

151 North Lyon Avenue
Hemet, CA 92543

I. QUALIFYING INSURERS

All of the insurance companies providing insurance for Contractor shall have, and provide written proof of, an A. M. Best rating of at least A minus 6 (A- VI) or shall be an insurance company of equal financial stability that is approved by the City or its insurance compliance representatives.

END OF DOCUMENT

S:\Attorney\Agreements\Construction Contracts\Design Bid Build - Engineer (post-qual A & B packages)\DOC 00821 - INSURANCE.DOC

# DOCUMENT 00822

# APPRENTICESHIP PROGRAM

Contractor and Subcontractors shall comply with the requirements of California Labor Code Sections 1776, 1777.5, and 1777.6 concerning the employment of apprentices by Contractor or Subcontractors. Willful failure to comply may result in penalties, including loss of the right to Bid on or receive public works contracts.

Section 1777.5, as amended, requires a Contractor or Subcontractor employing tradespersons in any apprenticeable occupation to apply to the joint apprenticeship committee nearest the site of a public works project and which administers the apprenticeship program in that trade for a certification of approval. The certificate shall also fix the ratio of apprentices to journeypersons that will be used in performance of the Contract. The ratio of work performed by apprentices to journeypersons in such cases shall not be less than one hour of apprentices work for every five hours of labor performed by journeypersons (the minimum ratio for the land surveyor classification shall not be less than one apprentice for each five journeypersons), except:

A. When unemployment for the previous three-month period in the area exceeds an average of 15 percent;

B. When the number of apprentices in training in the area exceeds a ratio of one to five;

C. When a trade can show that it is replacing at least 1/30 of its membership through apprenticeship training on an annual basis state-wide or locally; or

D. Assignment of an apprentice to any work performed under a public works contract would create a condition which would jeopardize his or her life or the life, safety, or property of fellow employees or the public at large or if the specific task to which the apprentice is to be assigned is of such a nature that training cannot be provided by a journeyperson.

Contractor is required to make contributions to funds established for administration of apprenticeship programs if Contractor employs registered apprentices or journeypersons in any apprenticeable trade on such contracts and if other contractors on the public works site are making such contributions.

Information relative to apprenticeship standards, wage schedules, and other requirements may be obtained from the Director of the California Department of Industrial Relations, or from the Division of Apprenticeship Standards and its branch offices.

END OF DOCUMENT

THIS PAGE

INTENTIONALLY

LEFT BLANK

SECTION 01100

# SUMMARY OF WORK

## PART 1 GENERAL

### 1.1 SUMMARY

A. Section includes summary of Work including:

1. Work Covered By Contract Documents
2. Bid Items, Allowances, and Alternates
3. Work Under Other Contracts (N/A)
4. Future Work
5. Work Sequence
6. Work Days and Hours
7. Cooperation of Contractor and Coordination with Other Work
8. Maintenance, Product Handling, and Protection
9. Partial Occupancy/Utilization Requirements
10. Contractor Use of Premises
11. Lines and Grades
12. Protection of Existing Structures and Utilities
13. Damage to Existing Property
14. Dust Control
15. Parking
16. Laydown/Staging Area
17. Permits
18. Punch List Verification
19. Actual Damages for Violations
20. Unfavorable Construction Conditions
21. Work at 2908 Lafayette
22. Construction Site Access
23. Specification Data Sheets and Schedules
24. Site Administration
25. Products Ordered In Advance
26. City-Furnished Products

## 1.2 WORK COVERED BY CONTRACT DOCUMENTS

Work comprises all required electrical work, including installation of wood and steel poles and anchors at various specified locations along the three segments of the Palm 60 kV Transmission Extension Project (Segment A – Kifer Receiving Station to Norman Avenue Junction (#33); Segment B – Norman Avenue Junction (#33) to Palm Station; Segment C – Palm Station to Norman Avenue Junction) in Santa Clara, California.

A. Furnish all labor, materials, equipment, services, permits, temporary controls and construction facilities, and all general conditions, seismic requirements, general requirements and incidentals required to complete the Work in its entirety as described in the Contract Documents. The Work includes, but is not necessarily limited to the following:

1. Segment A – Reconductor the Kifer Receiving Station to Norman Avenue Junction (#33) 60 kV transmission line. This line segment will become part of the Kifer Receiving Station to Palm Substation 60 kV Transmission Line.
2. Segment B – Construct the new Norman Avenue Junction (#33) to Palm Station 60 kV transmission line by installing new poles and overbuilding the existing distribution circuits where located. This new line segment will become part of the Kifer Receiving Station to Palm Substation 60 kV Transmission Line.
3. Segment C – Construct the new Palm Station to Norman Avenue Junction 60 kV transmission line by installing new poles and overbuilding the existing distribution circuits where located.
4. Perform acceptance testing and commissioning of the Kifer Receiving Station to Palm Station and Palm Station to Norman Avenue Junction transmission lines, including equipment furnished by the Contractor.
5. Coordinate with Subcontractors and other contractors working at the site, coordinate with local utility owners and the City, obtain necessary permits and comply with permit and environmental conditions, and perform site restoration and cleanup.

Contract Documents fully describe the Work.

B. The Work of this Contract comprises construction of all the Work indicated, described in the Specifications, or otherwise required by the Contract Documents.

C. Unless provided otherwise in the Contract Documents, all risk of loss to Work covered by Contract Documents shall rest with Contractor until Final Acceptance of the Work.

D. Contractor's use of the premises for Work and storage is limited to the area indicated.

E. Contractor shall be solely responsible for all utilities (including without limitation electricity, water, gas, etc.) at the Site.

## 1.3 BID ITEMS, ALLOWANCES, AND ALTERNATES

A. Any Bid Item may be deleted from the Work and Contract Sum, in total or in part, prior to or after award of Contract without compensation in any form or adjustment of other Bid Items or prices therefore.

B. Payment of all items is subject to provisions of Contract Documents, including without limitation Section 01200 (Measurement and Payment).

C. For all Bid Items, furnish and install all work indicated and described in Specifications and all other Contract Documents, including connections to existing systems. Work and requirements applicable to each individual Bid Item, or unit of Work, shall be deemed incorporated into the description of each Bid Item (whether Lump Sum, or Unit Price).

D. Descriptions of Lump Sum Items (listed by Bid Item Numbers). Bid items are not intended to be exclusive descriptions of work categories and Bidder shall determine and include in its pricing all submittal preparation, general conditions, general requirements, materials, labor, and equipment necessary to complete each Bid Item as shown and specified:

1. Bonds and Insurance: The lump sum price paid under this item shall be full payment for all Bonds and Insurance required by Document 00700 (General Conditions).

2. Safety Plan and Programs: The lump sum price paid under this item shall be full payment for providing the Safety Plan and programs as required by Section 001540 (Site Security and Safety) and Document 00700 (General Conditions).

3. Mobilization/Demobilization: The lump sum price paid under this item shall be full payment for initial mobilization at Project commencement (50% to be paid then), and cleanup and demobilization at Final Completion of Work to be completed (50% to be paid then).

4. Document 00400 Exhibit A. The lump sum price paid under this item shall be full payment for the reconductoring the Kifer Receiving Station to Norman Avenue Junction (#33) 60kV transmission line, including site preparation; locating and protecting existing utilities; installation and removal of any required temporary support structures; reframing of all poles as necessary; removal and installation of all poles, guys, anchors, and conductor as necessary; offsite disposal of all removed materials, and restoration of all landscaping to "before construction" conditions.

5. Document 00400 Exhibit B. The lump sum price paid under this item shall be full payment for the construction of the Norman Avenue Junction (#33) to Palm Substation 60kV transmission line, including site preparation; locating, protecting and transferring existing utilities; installation and removal of any required temporary support structures; reframing of all poles as necessary; removal and installation of all poles, guys, anchors, and conductor as necessary; offsite disposal of all removed materials, and restoration of all landscaping to "before construction" conditions.

6. Document 00400 Exhibit C. The lump sum price paid under this item shall be full payment for the construction of the Palm Substation to Norman Avenue Junction 60kV transmission line, including site preparation; locating and protecting existing utilities; installation and removal of any required temporary support structures; reframing of all poles as necessary; removal of a metal lattice tower; removal and installation of all poles, guys, anchors, and conductor as necessary; offsite disposal of all removed materials, and restoration of all landscaping to "before construction" conditions..

7. Record Drawings. The lump sum price paid under this item shall be full payment for preparation of detailed as-built construction drawings and plans for each segment of the Palm 60kV Transmission Extension Project.

8. All Work of Contract Documents other than Work separately provided for under other Bid Items. The lump sum price paid under this item shall be full payment for all Work of Contract Documents other than Work separately provided for under other Bid Items, including cleaning, testing, submittals, and all other general conditions, general requirements, and seismic requirements.

E. Descriptions of Unit Price Items and Basis of Measurement for Payment (NONE):

F. Contingency Reserve (NONE)

G. Allowances: (NONE)

H. Alternates: (NONE)

## 1.4 WORK UNDER OTHER CONTRACTS (N/A)

## 1.5 FUTURE WORK

The City has several projects that may involve work in the Receiving Stations or Substations that are also involved in this project. These projects are in the design phase and the impact of the work upon this contract are not known at this time.

## 1.6 WORK SEQUENCE

A. Construct Work in stages and at times to accommodate City operation requirements during the construction period; coordinate construction schedule and operations with City. Only one line outage on the Center Loop will be allowed at a time.

B. Contractor acknowledges that temporary poles and safety netting may be required at highway or expressway crossings to maintain a safe passage for traffic and/or protect facilities, including both existing and recently constructed under this Contract. All expenses for any temporary safety construction shall be included in the appropriate bid items.

## 1.7 WORK DAYS AND HOURS

A. Work Days and hours: Monday-Friday inclusive, 7:00 a.m.-4:30 p.m. local time.

B. Work at the Site on weekends or holidays is not permitted, unless Contractor requests otherwise from City in writing at least 48 hours in advance and City approves in its sole discretion. In the case of Work by Contractor after normal working hours, Contractor shall be responsible for any additional inspection costs incurred by the City. Such costs may be withheld from any succeeding monthly progress payment.

C. Connections to Existing Facilities. Unless otherwise specified or indicated, Contractor shall make all necessary connections to existing facilities. In each case, Contractor shall receive permission from City prior to undertaking connections.

Contractor shall protect facilities against deleterious substances and damage.

## 1.8 COOPERATION OF CONTRACTOR AND COORDINATION WITH OTHER WORK

A. Coordinate with City and any City forces, or other contractors and forces, as required by Document 00700 (General Conditions), paragraph 6.

B. Employ a full time coordinator to constantly review Contract Documents, submittals, changes, and prepare overlay drawings as necessary to avoid conflicts, errors, omissions and untimely construction.

C. Existing utilities and facilities must be kept in continuous operation throughout the construction period except for shutdown times previously agreed upon by City. Scheduling of shutdown times shall be coordinated with City by Contractor in strict accordance with Paragraph 1.7, Work Days And Hours. Contractor shall provide temporary facilities and make temporary modifications as necessary to keep the existing facilities in operation during the construction period.

## 1.9 MAINTENANCE, PRODUCT HANDLING, AND PROTECTION

A. Transport, deliver, handle, and store materials and equipment at the Site in such a manner as to prevent the breakage, damage or intrusions of foreign matter or moisture, and otherwise to prevent damage.

B. Hazardous substance compliance: Provide City with copies of the OSHA Material Safety Data Sheets (MSDS) for all products containing a hazardous substance, examples: Adhesives, paints, sealants, and the like.

C. Packaging: Provide packaged material in manufacturer's original containers with seals unbroken and labels intact until incorporated into the Work.

D. Remove all damaged or otherwise unsuitable material and equipment promptly from the Site.

E. Protection: Protect all finished surfaces.

F. Asbestos Removal. If, during the progress of the Work, suspected asbestos-containing products are identified, Contractor shall stop work in the affected area and engage an asbestos removal Subcontractor to verify the materials and, if necessary, encapsulate, enclose, or remove and dispose of all asbestos in accordance with current regulations of the Environmental Protection Agency and the U. S. Department of Labor – Occupational Safety and Health Administration, the state asbestos regulating agency, and any local government agency. Payment for such work will be made by Change Order.

   Asbestos Removal Subcontractor's Qualifications. The Subcontractor for asbestos removal shall be regularly engaged in this type of activity and shall be familiar with the regulations that govern this work. The Subcontractor shall demonstrate to the satisfaction of City that it has successfully completed at least three asbestos removal projects, that it has the necessary staff and equipment to perform the work, and that it has an approved site for disposal of the asbestos. Liability insurance covering the asbestos abatement work shall be provided as specified in the Supplementary Conditions.

   Asbestos Removal Methods. The asbestos removal Subcontractor shall submit a work plan of its proposed removal procedure to City before beginning work and shall certify that the methods are in full compliance with the governing regulations. The work plan shall cover all aspects of the removal, including health and safety of employees and building occupants, hygiene facilities, employee certification, clearance criteria, transportation and disposal, enclosure techniques, and other techniques appropriate for the proposed work.

G. Cost of maintenance of systems and equipment prior to Final Acceptance will be considered as included in prices bid and no direct or additional payment will be made therefor.

## 1.10 PARTIAL OCCUPANCY/UTILIZATION REQUIREMENTS

A. Allow City to take possession of and use any completed or partially completed portion of the Work during the progress of the Work as soon as is possible without interference to the Work.

B. Possession, use of Work, and placement and installation of equipment by City shall not in any way evidence the completion of the Work or any part of it.

C. Contractor shall not be held responsible for damage to the occupied part of the Work resulting from City occupancy.

D. Make available, in areas occupied, on a 24-hour per day and 7-day per week basis if required, any utility services, heating, and cooling in condition to be put in operation at the time of occupancy.

1. Responsibility for operation and maintenance of said equipment shall remain with Contractor.
2. Make, and City shall certify, an itemized list of each piece of equipment so operated with the date operation commences.
3. Itemized list noted above shall be basis for commencement of warranty period for equipment.
4. City shall pay for utility cost arising out of occupancy by City during construction.

E. Use and occupancy by City prior to acceptance of Work does not relieve Contractor of its responsibility to maintain insurance and bonds required under the Contract until entire Work is completed and accepted by City.

F. Prior to date of Final Acceptance of the Work by City, all necessary repairs or renewals in Work or part thereof so used, not due to ordinary wear and tear, but due to defective materials or workmanship or to operations of Contractor, shall be made at expense of Contractor, as required in Document 00700 (General Conditions).

G. Use by City of Work or part thereof as contemplated by this Section 01100 shall in no case be construed as constituting acceptance of Work or any part thereof. Such use shall neither relieve Contractor of any responsibilities under Contract, nor act as waiver by City of any of the conditions thereof.

H. City may specify in the Contract Documents that portions of the Work, including electrical and mechanical systems or separate structures, shall be substantially completed on dates described in paragraph 1.6 of this Section 01100, if any, prior to substantial completion of all of the Work. Notify City in writing when Contractor considers any such part of the Work ready for its intended use and substantially complete and request City to issue a Certificate of Substantial Completion for that part of the Work.

## 1.11 CONTRACTOR USE OF PREMISES

A. Contractor shall confine operations at Site to areas permitted by Contract Documents, permits, ordinances, and laws.

B. Contractor shall not unreasonably encumber Project Site with materials or equipment.

C. Contractor assumes full responsibility for protection and safekeeping of products stored on premises.

D. Contractor shall move any stored products that interfere with operations of City or other contractor.

E. Parking, storage, staging, and work areas shall be coordinated with the City, and comply with all other Contract documents requirements.

## 1.12 LINES AND GRADES

A. All Work shall be done to the lines, grades, and elevations indicated on the Drawings.

B. City shall provide basic horizontal and vertical control points to be used as datums for the Work. All additional survey, layout, and measurement work shall be performed by Contractor as a part of the Work.

C. Contractor shall provide at its cost an experienced instrument person, competent assistants, and such instruments, tools, stakes and other materials required to complete the survey, layout, and measurement work. In addition, Contractor shall furnish at its cost competent persons and such tools, stakes, and other materials as City (and/or any Engineer) may require in establishing or designating control points, or in checking survey, layout, and measurement work performed by Contractor.

D. Contractor shall keep City informed, a reasonable time in advance, of the times and places at which it wishes to do Work, so that any checking deemed necessary by City may be done with minimum inconvenience to City and minimum delay to Contractor.

E. Contractor shall remove and reconstruct all improperly located Work.

## 1.13 PROTECTION OF EXISTING STRUCTURES AND UTILITIES

A. The Drawings may indicate existing above- and below-grade structures, drainage lines, storm drains, sewers, water, gas, electrical, hot water, and other similar items and utilities that are known to City.

B. Contractor shall locate these known existing installations before proceeding with augering or other operations which may cause damage, shall maintain them in service where appropriate, and shall repair any damage to them caused by the Work, at no increase in Contract Sum.

C. Additional utilities, whose locations are unknown to City, are suspected to exist. Contractor must be alert to their existence. If additional utilities are encountered, Contractor must immediately report to City for disposition.

D. In addition to reporting, if a utility is damaged, Contractor must take appropriate action as provided in Document 00700 (General Conditions).

E. Additional compensation or extension of time on account of utilities not indicated or otherwise brought to Contractor's attention, including reasonable action taken to protect or repair damage, shall be determined as provided in Document 00700 (General Conditions).

## 1.14 DAMAGE TO EXISTING PROPERTY

A. Contractor will be responsible for any damage to existing structures, Work, materials, or equipment because of its operations and shall repair or replace any damaged structures, Work, materials, or equipment to the satisfaction of, and at no additional cost to, City.

B. Contractor shall protect all existing structures and property from damage and shall provide bracing, shoring, or other work necessary for such protection.

C. Contractor shall be responsible for all damage to streets, roads, curbs, sidewalks, highways, shoulders, ditches, embankments, culverts, bridges, or other public or private property, which may be caused by transporting equipment, materials, or workers to or from the Work. Contractor shall make satisfactory and acceptable arrangements with the agency having jurisdiction over the damaged property concerning its repair or replacement.

## 1.15 DUST CONTROL

A. Contractor shall take reasonable measures to prevent unnecessary dust. The following items shall be specifically implemented to control dust:

1. All construction locations with active excavation shall be watered at least twice daily.
2. Cover all trucks hauling soil, sand, and other loose materials; or require all trucks to maintain at least two feet of freeboard.
3. Pave, apply water daily, or apply non-toxic soil stabilizers on all un-paved access roads, parking areas, and staging areas at construction site.
4. Sweep daily with water sweepers all paved access roads, parking areas, and staging areas at construction sites during earthwork activities.
5. Enclose, cover, water twice daily, or apply non-toxic soil binders to exposed stockpiles (dirt, sand, etc.)
6. Limit the speed of all construction vehicles to 5 miles per hour while on un-paved roads at the Site.

B. Buildings or operating facilities, which may be affected adversely by dust, shall be adequately protected from dust. Suitable dust screens shall protect existing and new machinery, motors, instrument panels, or similar equipment. Proper ventilation shall be included with dust screens

## 1.16 PARKING

Contractor shall provide and maintain suitable parking areas for the use of all construction workers and others performing work or furnishing services in connection with the Project, as required to avoid any need for parking personal vehicles where they may interfere with public traffic, City's operations, or construction activities.

## 1.17 LAYDOWN/STAGING AREA

Contractor shall be responsible for obtaining their own area (if needed) to be used for laydown or staging.

## 1.18 PERMITS

Applicable permits: Permits, agreements, or written authorizations that are known by the City to apply to this project are listed below:

A. City of Santa Clara, Street Opening Permit

B. County of Santa Clara for all work adjacent to or crossing the Montague Expressway that may encroach or have the potential to encroach on the County Right-of-Way (Segment B and Segment C only).

C. State of California Department of Transportation for all work adjacent to or crossing the Bayshore Freeway (Hwy 101) that may encroach or have the potential to encroach on the State Right-of-Way (Segment A only).

D. Union Pacific Railroad for all work adjacent to or crossing their Right-of-Way that may encroach or have the potential to encroach or fowl their tracks (Segment B and Segment C only).

E. Pacific Gas and Electric for all work adjacent to or crossing the existing four 115 kV transmission lines in two (2) places (Segment A only).

F. Cal/OSHA Permit. The Contractor shall obtain, as applicable, a permit as required by Cal/OSHA for each of the following:

- Construction of trenches or excavations that are five(5) feet or more in depth and into which a person is required to descend.
- Construction or demolition of any building, structure, or scaffolding for falsework more than three (3) stories high, or the equivalent height (36 feet).
- Erection or dismantling of vertical shoring systems more than three (3) stories high, or the equivalent height (36 feet).

The Contractor shall be responsible for obtaining and paying all costs involved for the above permits, agreements, or written authorizations.

All other permits that may be required, such as electrical, mechanical, fire prevention, irrigation, grading, slope protection, tree cutting, etc., have not been applied for and shall be obtained by Contractor. Applicable permit fees will be reimbursed to the extent specified in Document 00700 (General Conditions).

## 1.19 PUNCH LIST VERIFICATION

A punch list examination will be performed upon Substantial Completion of Work. One follow-up review of punch list items for each discipline will be provided. If further Site visits are required to review punch list items due to incompleteness of the Work by Contractor, Contractor shall reimburse City for these visits.

## 1.20 ACTUAL DAMAGES FOR VIOLATIONS

A. In addition to damages which are impracticable or extremely difficult to determine, for which liquidated damages will be assessed as described in paragraph 15.5 of Document 00700 (General Conditions), City may incur actual damages resulting from loss of use of any permit described in this Section 01100, or from use in violation of legal or regulatory requirements where the violations result from Contractor's activities.

B. Contractor shall be liable for and shall pay City the amount of any actual losses in addition to liquidated damages or other remedies provided by the Contract Documents.

C. The amount of liquidated damages provided in paragraph 15.5 of Document 00700 is not intended to include, nor does the amount include, any damages incurred by City for reasons other those listed in that paragraph. Any money due or to become due to Contractor may be retained by City to cover both the liquidated and the actual damages described above and, should such money not be sufficient to cover such damages, City shall have the right to recover the balance from Contractor or its sureties.

## 1.21 UNFAVORABLE CONSTRUCTION CONDITIONS

During unfavorable weather, wet ground, or other unsuitable construction conditions, Contractor shall confine its operations to Work that is not affected adversely by such conditions. No portion of the Work shall be constructed under conditions that affect adversely the quality or efficiency thereof, unless special means or precautions are taken by Contractor to perform the Work in a proper and satisfactory manner.

## 1.22 CONSTRUCTION SITE ACCESS

Access to any of the City's Substation or Receiving Station sites requires a Silicon Valley Power representative to be present at all times. Contractor shall be responsible to make all arrangements at least two (2) working days in advance. Access for construction personnel shall be limited to 7:00 a.m. to 5:00 p.m. local time.

## 1.23 SPECIFICATION DATA SHEETS AND SCHEDULES

Specifications may have data sheets and schedules as part of specific specification sections. Locations for data entries on the data sheets and schedules may be left blank intentionally. Each line where data may be entered on the data sheet has a selection box in the column "Chk". When the box for a line is checked and no data is entered in the respective line, this indicates that no data is required for that line of the data sheet.

Other standard codes which apply to the Work are designated in the Specifications.

## 1.24 SITE ADMINISTRATION

Contractor shall be responsible for all areas of the Site(s) used by it and by all Subcontractors in the performance of the Work. Contractor shall exert full control over the actions of all employees and other persons with respect to the use and preservation of property and existing facilities, except such controls as may be specifically reserved to City or others. Contractor shall have the right to exclude from the Site all persons who have no purpose related to the Work or its inspection, and may require all persons on the Site (except City's employees) to observe the same regulations as Contractor requires of its employees.

# PART 2 PRODUCTS

## 2.1 PRODUCTS ORDERED IN ADVANCE (N/A)

## 2.2 CITY-FURNISHED PRODUCTS (N/A)

# PART 3 EXECUTION – NOT USED

END OF SECTION

# DOCUMENT 01200

# MEASUREMENT AND PAYMENT

## PART 1 GENERAL

### 1.01 SUMMARY

This section describes requirements and procedures for determining amount of work done and for obtaining payment for work done.

### 1.02 REFERENCES

1. California Public Contract Code
2. Code of Civil Procedures
3. Government Code

### 1.03 SCOPE OF WORK

Work under Contract Documents, or under any bid item, allowance or alternate, shall include all labor, materials, transport, handling, storage, supervision, administration and all other items necessary for the satisfactory completion of Work, whether or not expressly specified or shown.

### 1.04 DETERMINATION OF QUANTITIES

Quantity of work to be paid for under any item for which a unit price is fixed in Contract Documents shall be number, as determined by City, of units of work satisfactorily completed in accordance with Contract Documents or as directed by City. Unless otherwise provided, determination of number of units of work so completed will be based, so far as practicable, on actual measurement or count within prescribed or ordered limits, and no payment will be made for work done outside of limits. Measurements and computations will be made by methods, as City may consider appropriate for class of work measured. Contractor shall immediately inform City of any disputes regarding quantity measurements and shall immediately supply City with any documentation supporting the disputed measurements.

### 1.05 SCOPE OF PAYMENT

A. Except as otherwise expressly stipulated in Section 01100 Summary of Work, payment to Contractor at the unit price or other price fixed in the contract for performing Work required under any item, or (if the contract is on a lump sum price basis) at the lump sum price fixed in the contract for performing all work required under Contract Documents, and as either may be adjusted pursuant to any approved Change Order, or City directive to perform work on a time and material basis or unilateral change order basis, as required in Section 01250 shall be full compensation for completing, in accordance with Contract Documents, all work required under the item or under Contract Documents, and for all expense incurred by Contractor for any

purpose in connection with the performance and completion of said work, including all incidental work necessary for completion of the Work.

B. The Contract Sum, whether lump sum, unit price or otherwise, shall be deemed to include all costs necessary to complete required Work, shall also include any costs for loss or damage arising from nature of Work or, prosecution of the Work, or from action of elements. Unless Contract Documents expressly provide otherwise, the Contract Sum shall be deemed to include:

1. Any and all costs arising from any unforeseen difficulties, which may be encountered during, and all risks of any description connected with, prosecution of Work, bid item or unit price item, respectively, until acceptance by City;

2. All expenses incurred due to suspension, or discontinuance of Work, bid item or unit price item, respectively, as provided in Contract Documents;

3. Escalation to allow for cost increases between time of Contract Award and completion of Work, bid item or unit price item, respectively.

C. Whenever it is specified herein that Contractor is to do work or furnish materials of any class for which no price is fixed in Contract Documents, it shall be understood that Contractor is to do such work or furnish such materials without extra charge or allowance or direct payment of any sort, and that cost of doing work or furnishing materials is to be included in price bid, unless it is expressly specified herein, in particular cases, that work or material is to be paid for as extra work.

D. For the materials and equipment referenced in Section 01100, as subject to payment prior to incorporation into the Work, where Contractor requests payment on the basis of such materials and equipment not incorporated in the Work, Contractor must satisfy the following conditions:

1. The materials and/or equipment shall be delivered and suitably stored at the site or at another local location agreed to in writing, for example, a mutually acceptable warehouse;

2. Full title to the materials and/or equipment shall vest in City at the time of delivery to the site, warehouse or other storage location;

3. Contractor shall obtain a negotiable warehouse receipt, endorsed over to City for materials and/or equipment stored in an off-site warehouse. No payment shall be made until such endorsed receipts are delivered to City;

4. Stockpiled materials and/or equipment shall be available for City inspection, but City shall have no obligation to inspect them and its inspection or failure to inspect shall not relieve Contractor of any obligations under the Contract Documents. Materials and/or equipment shall be segregated and labeled or tagged to specifically identify these specific Contract Documents;

5. After delivery of materials and/or equipment, if any inherent or acquired defects are discovered, defective materials and/or equipment shall be removed and replaced with suitable materials and/or equipment at Contractor's expense;

6. At its expense, Contractor shall insure the materials and/or equipment against theft, fire, vandalism, and malicious mischief, as well as any other coverage's required under the Contract Documents;

7. Contractor's application for payment shall be accompanied by a bill of sale, invoice or other documentation warranting that City has received the materials and equipment free and clear of all liens and evidence that the materials and equipment are covered by appropriate property insurance and other arrangements to protect City's interest therein, all of which must be satisfactory to City. This documentation shall include, but not be limited to, conditional releases of mechanics' liens and stop notices from all those providing materials and equipment as to which the application for payment relates, as well as unconditional releases of the same from the same as to the previous application for payment for which they have not already been provided.

8. Amounts previously paid for materials and equipment prior to incorporation into the Work shall be deducted from amounts otherwise due Contractor as they are incorporated.

1.06 BASIS OF PAYMENT

A. Unit Pay Quantities: When estimated quantity for specific portions of Work is listed in Bid Form, quantity of work to be paid for shall be actual number of units satisfactorily completed in accordance with Contract Documents.

B. Lump Sum: When estimated quantity for specific portion of Work is not indicated and unit is designated as Lump Sum, payment will be based on the approved schedule of values of the work under the lump sum, or in the event a schedule of values is not required, on the percentage of the lump sum scope satisfactorily completed. Once Contractor provides and the City accepts the cost loaded activities in the Initial Contract Schedule, payment will be based on the accepted lump sums of cost-loaded activities. See Specification Section 01320 regarding the preparation of the cost-loaded Initial Contract Schedule.

C. Allowances: Allowance items will be paid for as provided in Section 01100 Summary of Work. Funds authorized for Allowance work will not be released for contract payments unless City has authorized Allowance work in writing.

D. City does not expressly, or by implication, agree, warrant, or represent in any manner, that actual amount of Work will correspond with amount shown or estimated and reserves right to increase or decrease amount of any class or portion of Work, to leave out entire Bid Item or Items, or to add work not included in Bid, when in its judgment such change is in best interest of City. No change in Work shall be considered waiver of any other condition of Contract Documents. No claim shall be made for anticipated profit, for loss of profit, for damages, or for extra payment whatever, except as otherwise expressly provided for in Contract Documents, because of any differences between amount of work actually done and estimated amount as set forth herein, or for elimination of extra Bid Items.

1.07 PROGRESS PAYMENTS

A. If requested by Contractor, progress payments will be made monthly, but not more often then monthly.

B. Schedule of Values.

1. Within ten (10) calendar days from issuance of Notice of Award and prior to the Contractor's application for the first progress payment, Contractor shall submit a detailed breakdown of its bid by scheduled Work items and/or activities based on the approved cost loading of the Initial Contract Schedule, including coordination responsibilities and project record document responsibilities. Where more than one subcontractor comprises the work of a work item or activity, the Schedule of Values shall show a separate line item for each subcontract. Contractor shall furnish such breakdown, of the total Contract Sum, by assigning dollar values (cost estimates) to each applicable Initial Contract Schedule network activity, which cumulative sum equals the total Contract Sum. The format and detail of the breakdown shall be as directed by City to facilitate and clarify future progress payments to Contractor for direct Work under Contract Documents. This breakdown shall be referred to as the Schedule of Values.

2. Contractor's overhead, profit, insurance, cost of bonds and/or other financing, as well as "general conditions costs," (e.g., site cleanup and maintenance, temporary roads and access, off site access roads, monthly costs of temporary power and lighting, security and the like), shall be prorated through all activities so that the sum of all the Schedule of Values line items equal Contractor's total Contract Sum, less any allowances designated by City. Scheduling, record documents and quality assurance control shall be separate line items.

3. City will review the breakdown in conjunction with the approved cost loading of the Initial Contract Schedule activities to ensure that the dollar amounts of this Schedule of Values are, in fact, fair market cost allocations for the Work items listed. Upon favorable review by City, City will accept this Schedule of Values for use. City shall be the sole judge of fair market cost allocations.

4. Any attempt to increase the cost of early activities, (i.e., "front loading,") will be rejected by City, resulting in a complete reallocation of monies until such "front loading" is corrected. Repeated attempts at "front loading" may result in suspension or termination of the Work or refusal to process progress payments, until such time as the Schedule of Values is acceptable to City.

C. Payment Requests

1. On or before the 20th Day of each month (but after receipt of City's approval of the updated Schedule as required by Section 01320 (Progress Schedules and Reports)), Contractor shall submit to City five copies of an Application for Payment for the cost of the Work put in place during the period from the 15th Day

of the previous month to the 15th Day of the current month. Such Applications for Payment shall be for the total value of activities completed or partially completed, including approved activity costs, based upon Schedule of Values prices (or Bid item prices if unit price) of all labor and materials incorporated in the Work up until midnight of the last Day of that one month period, less the aggregate of previous payments. Accumulated retainage shall be shown as separate item in payment summary. Contractor shall submit in a form acceptable to City an itemized cost breakdown of Contractor's record of Cost of the Work together with supporting data and any certification required by City. If Contractor is late submitting its Application for Payment, that Application may be processed at any time during the succeeding one-month period, resulting in processing of Contractor's Application for Payment being delayed for more than a Day for Day basis.

2. Payment requests may include, but are not necessarily limited to the following:

   a. Material, equipment and labor incorporated into the Work at the Site, less any previous payments for the same;

   b. Up to seventy-five percent (75%) of the cost of major equipment identified in paragraph 1.05.E above (if any), if purchased and delivered to the site or stored off site, as may be approved by City.

   c. Up to fifty percent (50%) of the cost of materials identified in paragraph 1.05.E above (if any), specifically fabricated for the Project that is not yet incorporated into the Work at the Site.

3. Contractor shall, at the time any payment request is submitted, certify in writing the accuracy of the payment request and that Contractor has fulfilled all scheduling requirements of Document 00700 General Conditions and Section 01320 Progress Schedules and Reports, including updates and revisions. A responsible officer of Contractor shall execute the certification.

4. No progress payment will be processed prior to City receiving all requested, acceptable schedule update information. Failure to submit a schedule update complying with Section 01320 justifies denying the entire Application for Payment.

5. Each Application for Payment shall list each Change Order and Construction Change Directive ("CCD") executed prior to date of submission, including the Change Order/CCD Number, and a description of the work activities, consistent with the descriptions of original work activities. Submit a monthly Change Order/CCD status log to City.

6. If City requires substantiating data, Contractor shall submit information requested by City, with cover letter identifying Project, payment request number and date, and detailed list of enclosures. Contractor shall submit one copy of substantiating data and cover letter for each copy Payment request submitted.

7. Monthly progress payments shall be made, based on total value of activities completed or partially completed, as determined by City with participation of Contractor, and based upon approved activity costs. Accumulated retainage will be shown as separate item in payment summary. If Contractor fails or refuses to participate in construction progress evaluation with City, Contractor shall not receive current payment until Contractor has participated fully in providing construction progress information and schedule update information for City.

D. Progress Payments

1. City will review Contractor's payment request following receipt. If adjustments need to be made to percent of completion of each activity, City will make appropriate notations and return to Contractor. Contractor will revise and resubmit. All parties will update percentage of completion values in the same manner, i.e., express value of an accumulated percentage of completion to date.

2. Each Application for Payment may be reviewed by City and/or inspectors to determine whether the Application for Payment is proper, and shall be rejected, revised, or approved by City pursuant to the Schedule of Values prepared in accordance with paragraph of this Section 01200.

3. If it is determined that the payment request is not a proper payment request suitable for payment, City shall return it to the Contractor as soon as practicable, but no later than seven (7) days after receipt, together with a document setting forth in writing the reasons why the payment request is not proper. If City determines that portions of the payment request is not proper or not due under the Contract Documents, then City may approve the other portions of the payment request, and in the case of disputed items or defective work not remedied, may withhold up to 150% of the disputed amount from the progress payment.

4. Pursuant to Public Contract Code Section 20104.50, if City fails to make any progress payment within thirty (30) days after receipt of an undisputed and properly submitted payment request from a contractor, City shall pay interest to the Contractor equivalent to the legal rates set forth in subdivision (a) of Section 685.010 of the Code of Civil Procedure. The thirty (30) day period shall be reduced by the number of days by which City exceeds the seven (7) day return requirement set forth herein.

5. As soon as practicable after approval of each request for progress payment, City will pay to Contractor in manner provided by law, an amount equal to ninety percent (90%) of City's estimate, or a lesser amount if so provided in Contract Documents, provided that payments may at any time be withheld if, in judgment of City, Work is not proceeding in accordance with Contract, or Contractor is not complying with requirements of Contract, or to comply with stop notices or to offset liquidated damages accruing or expected.

6. Before any progress payment or final payment is due or made, Contractor shall submit satisfactory evidence that Contractor is not delinquent in payments to employees, Subcontractors, suppliers, or creditors for labor and materials

incorporated into Work. This specifically includes, without limitation, conditional lien release forms for the current progress payment and unconditional release forms for past progress payments. City also may elect in its sole discretion to pay progress payments by joint check to Contractor and each Subcontractor having an interest in that progress payment in such amount.

7. City reserves and shall have the right to withhold payment for any equipment and/or specifically fabricated materials that, in the sole judgment of City, is not adequately and properly protected against weather and/or damage, prior to or following incorporation into the Work.

8. Granting of progress payment or payments by City, or receipt thereof by Contractor, shall not be understood as constituting in any sense acceptance of Work or of any portion thereof, and shall in no way lessen liability of Contractor to replace unsatisfactory work or material, though unsatisfactory character of work or material may have been apparent or detected at time payment was made.

9. When City shall charge sum of money against Contractor under any provision of Contract Documents, amount of charge shall be deducted and retained by City from amount of next succeeding progress payment or from any other moneys due or that may become due Contractor under Contract. If, on completion or termination of Contract, such moneys due Contractor are found insufficient to cover City's charges against it, City shall have right to recover balance from Contractor or Sureties.

10. The City will not reduce the 10% retention until the City issues the Certificate of Substantial Completion in accordance with Section 01770, Project Closeout, Paragraph 1.03. The City reserves the right to maintain the 10% retention after the Certificate of Substantial Completion is issued if the Contractor is not complying with the requirements of the Contract, or to comply with stop notices or to offset liquidated damages accruing or expected.

## 1.08 SUBSTITUTION OF SECURITIES IN LIEU OF RETENTION

In accordance with the provisions of Public Contract Code Section 22300, substitution of securities for any monies withheld under Contract Documents to insure performance is permitted under following conditions:

1. At request and expense of Contractor, securities listed in Section 16430 of the Government Code, bank or savings and loan certificates of deposit, interest bearing demand deposit accounts, standby letters of credit, or any other security mutually agreed to by Contractor and City which are equivalent to the amount withheld under retention provisions of Contract shall be deposited with Controller or with a state or federally chartered bank in California, as the escrow agent, who shall then pay such monies to Contractor. Upon satisfactory completion of Contract, securities shall be returned to Contractor.

2. Alternatively, Contractor may request and City shall make payment of retentions earned directly to the escrow agent at the expense of Contractor. At the expense of Contractor, Contractor may direct the investment of the payments into securities and Contractor shall receive the interest earned on the investments upon the same terms provided for in this section for securities deposited by Contractor. Upon satisfactory completion of Contract Documents, Contractor shall receive from escrow agent all securities, interest, and payments received by the escrow agent from City, pursuant to the terms of this section. Contractor shall pay to each subcontractor, not later than twenty (20) days after receipt of the payment, the respective amount of interest earned, net of costs attributed to retention withheld from each subcontractor, on the amount of retention withheld to insure the performance of Contractor.

3. Contractor shall be beneficial owner of securities substituted for monies withheld and shall receive any interest thereon.

4. Contractor shall enter into escrow agreement with Controller according to Document 00680, Escrow Agreement, as authorized under Public Contract Code Section 22300, specifying amount of securities to be deposited, terms and conditions of conversion to cash in case of default of Contractor, and termination of escrow upon completion of Contract Documents.

5. Public Contract Code Section 22300 is hereby incorporated in full by this reference.

1.09 FINAL PAYMENT

A. As soon as practicable after all required Work is completed in accordance with Contract Documents, including Contractor maintenance after Final Acceptance, City will pay to Contractor, in manner provided by law, unpaid balance of contract price of Work, or whole contract price of Work if no progress payment has been made, determined in accordance with terms of Contract Documents, less sums as may be lawfully retained under any provisions of Contract Documents or by law.

B. Prior progress payments shall be subject to correction in the final payment. City's determination of amount due as final payment shall be final and conclusive evidence of amount of Work performed by Contractor under Contract Documents and shall be full measure of compensation to be received by Contractor.

C. Contractor and each assignee under an assignment in effect at time of final payment shall execute and deliver at time of final payment and as a condition precedent to final payment, Document 00650, Agreement and Release of Any and All Claims, discharging City, its officers, agents, employees and consultants of and from liabilities, obligations, and claims arising under Contract Documents.

1.10 EFFECT OF PAYMENT

Payment will be made by City, based on City's and Architect's observations at the site and the data comprising the Application for Payment. Payment will not be a representation that City and Architect has:

1. made exhaustive or continuous on-site inspections to check the quality or quantity of Work;

2. reviewed construction means, methods, techniques, sequences or procedures;

3. reviewed copies of requisitions received from subcontractors and material suppliers and other data requested by City to substantiate Contractor's right to payment; or

4. made examination to ascertain how or for what purpose Contractor has used money previously paid on account of the Contract Sum.

1.11 Contingency Reserve

A. City will authorize and direct Contractor regarding provisions in this paragraph.

B. Contingency Reserve Amount: as listed in Document 00520 (Agreement).

C. City shall determine, in its sole discretion, which, if any, costs it will authorize in writing to be paid from the Contingency Reserve. Generally, Contingency Reserve will be used only for City-initiated changes in scope of Work of Contract Documents.

D. Cost shall be determined as for CCD work as provided in Section 01250 (Modification Procedures).

E. Prior to final payment, an appropriate Change Order will be issued to reflect actual amounts due Contractor on account of Work covered by this Contingency Reserve, and the Contract Sum will be correspondingly adjusted.

PART 2 PRODUCTS

Not applicable to this section.

PART 3 - EXECUTION

Not applicable to this section.

END OF SECTION

THIS SECTION

INTENTIONALLY

LEFT BLANK

# DOCUMENT 01250

# MODIFICATION PROCEDURES

## PART 1 GENERAL

### 1.01 SUMMARY

A. This section describes general procedural requirements for alterations, modifications and extras.

B. Related Sections

1. Section 01100: Summary of Work
2. Section 01200: Measurement and Payment

### 1.02 GENERAL

A. Any change in scope of work or deviation from Contract Documents, including without limitation extra work, or alterations or additions to or deductions from the original work, shall not invalidate the original Contract, and shall be performed under the terms of the Contract Documents.

B. Only Contractor or City may initiate changes in scope of Work, or deviation from Contract Documents.

1. Contractor may initiate changes by submitting Requests For Information (RFI)

a. RFI's shall be submitted to seek clarification of Contract Documents.

b. Notices of Concealed or Unknown Conditions shall be submitted in accordance with Document 00700, General Conditions.

c. Notices of Hazardous Waste Conditions shall be submitted in accordance with Document 00700, General Conditions.

C. Contractor shall be responsible for its costs to implement and administer RFIs throughout the Contract duration. Regardless of the number of RFIs submitted, Contractor shall not be entitled to additional compensation. Contractor shall be responsible for both City and its Engineer's administrative costs for answering RFIs where the answer could reasonably be found by reviewing the Contract Documents, as determined by City; at City's discretion, such costs may be deducted from progress payments or final payment.

1. City may initiate changes in the Work or Contract Times by issuing a Request for Proposal (RFP) or a Field Instruction (FI) to Contractor. Such RFPs or FIs will detail all proposed changes in the Work and request a quotation of changes in Contract Sum and Contract Times from Contractor.

2. City may also by Field Instruction, order changes in the Work within the general scope of the Contract consisting of additions, deletions or other revisions, the Contract Sum and Contract Time being adjusted accordingly. A Field Instruction shall be used in the absence of total agreement on the terms of a Change Order.

3. City may also, by Construction Change Directive (CCD), order changes in the Work within the general scope of the Contract consisting of additions, deletions, or other revisions, the Contract Sum and Contract Time being adjusted accordingly. A CCD shall be used in the absence of total agreement on the terms of a Change Order and may, upon notice, consist of a Change Order executed by City only.

1.03 PROCEDURE

A. Cost Proposal and Procedures: Whenever Contractor is required in this Section 01250 to prepare a Cost Proposal, and whenever Contractor is entitled to submit a Cost Proposal and elects to do so, Contractor shall prepare and submit to City for consideration a Cost Proposal using the form attached to this Section 01250. All Cost Proposals must contain a complete breakdown of costs of credits, deducts and extras; itemizing materials, labor, taxes, overhead and profit. All Subcontractor Work shall be so indicated. Individual entries on the Cost Proposal form shall be determined as provided in paragraphs 1.4 and 1.5 of this Section 01250. After receipt of a Cost Proposal with a detailed breakdown, City will act promptly thereon.

1. If City accepts a Cost Proposal, City will prepare Change Order for City and Contractor signatures.

2. If Cost Proposal is not acceptable to City because it does not agree with cost and/or time included in Cost Proposal, City will submit in a response what it believes to be a reasonable cost and/or adjustment, if any. Except as otherwise provided in this Section 01250, Contractor shall have seven Days in which to respond to City with a revised Cost Proposal.

3. When necessity to proceed with a change does not allow the City sufficient time to conduct a proper check of a Cost Proposal (or revised Cost Proposal), City may order Contractor to proceed on basis to be determined at earliest practical date. In this event, value of change, with corresponding equitable adjustment to Contract, shall not be more than increase or less than decrease proposed

B. Request for Information: Whenever Contractor requires information regarding the Project or Contract Documents, or receives a request for information from a Subcontractor, Contractor may prepare and deliver an RFI to City. Contractor shall use RFI format provided by City. Contractor must submit time critical RFIs at least 30 days before scheduled start date of the affected Work activity. Contractor shall reference each RFI to an activity of Progress Schedule and shall note time criticality of the RFI, indicating time within which a response is required. Contractor's failure to reference RFI to an activity on the Progress Schedule and note time criticality on the RFI shall constitute Contractor's waiver of any claim for time delay or interruption to the Work resulting from any delay in responding to the RFI.

1. City will respond within seven Days from receipt of RFI with a written response to Contractor. Contractor shall distribute response to all appropriate Subcontractors.
2. If Contractor is satisfied with the response and does not request change in Contract Sum or Contract Time, then the response shall be executed without a change.
3. If Contractor believes the response is incomplete, Contractor shall issue another RFI (with the same RFI number with the letter "A" indicating if it is a follow-up RFI) to City clarifying original RFI. Additionally, City may return RFI requesting additional information should original RFI be inadequate in describing condition.
4. If Contractor believes that the response results in change in Contract Sum or Contract Time, Contractor shall notify City in writing within seven Days after receiving the response. If City disagrees with Contractor, then Contractor may give notice of intent to submit a Claim as described in Article 12 of Document 00700 (General Conditions), and submit its Claim within 30 days. If City agrees with Contractor, then Contractor must submit a Cost Proposal within 21 Days of receiving the response to the RFI. Contractor's failure to deliver either the foregoing notice and Claim or Cost Proposal by the respective deadlines stated in the foregoing sentences shall result in waiver of the right to file a Cost Proposal or Claim.

C. Differing Site Conditions–Procedure: Contractor shall submit Requests for Information to resolve problems regarding differing site conditions encountered in the execution of the Work. Procedures in Paragraph 13.D of Document 00700 General Conditions shall be followed. If City determines that a change in Contract Sum or contract Times is justified, City shall issue a Field Instruction.

D. Hazardous Waste Conditions–Procedure: Contractor shall submit Requests for Information to resolve problems regarding hazardous materials encountered in the execution of the Work. Procedures in Paragraph 13.E of Document 00700 General Conditions shall be followed. If City determines that a change in Contract Sum or contract Times is justified, City shall issue a Field Instruction.

E. Supplemental Instruction–Procedure: City may issue Supplemental Instructions to Contractor using the Field Instruction form. Contractor shall not proceed with Supplemental Instruction until one of the two following conditions has been met.

1. If Contractor is satisfied with Supplemental Instruction and does not request change in Contract Sum or Contract Times, then the Contractor shall initial the Field Instruction containing the Supplemental Instruction, and Contractor shall procedure with the work outlined in the Field Instruction without a Change Order.

2. If Contractor believes that Supplemental Instruction results in change in Contract Sum or Contract Times, Contractor shall submit a Cost Proposal to City, referencing the related Field Instruction Number. City may then deny request for change, cancel Supplemental Instruction, review the Cost Proposal following the procedures above, or issue a Change Order.

F. Construction Change Directives: If at any time City believes in good faith that a timely Change Order will not be agreed upon using the foregoing procedures, City may issue a CCD with its recommended cost and/or time adjustment. Upon receipt of CCD, Contractor shall promptly proceed with the change of Work involved and concurrently respond to City's CCD within 10 Days.

Contractor's response must be any one of following:

a. Return CCD signed, thereby accepting City's response, time and cost.

b. Submit a (revised if applicable) Cost Proposal with supporting documentation (if applicable, reference original Cost Proposal number followed by letter A, B, etc. for each revision), if City so requests.

c. Give notice of intent to submit a Claim as described in Article 12 of Document 00700 (General Conditions), and submit its Claim with 30 days.

1. If the CCD provides for an adjustment to the Contract Sum, the adjustment shall be based on one of the following methods:

   a. Mutual acceptance of a lump sum properly itemized and supported by sufficient substantiating data to permit evaluation.

   b. Unit prices stated in the Contract Documents or subsequently agreed upon.

   c. Cost to be determined in a manner agreed.

2. CCD signed by contractor indicates the agreement of contractor therewith, including adjustment in contract sum and contract time or the method for determining them. Such agreement shall be effective immediately and shall be recorded as a change order

3. If Contractor does not respond promptly or disagrees with the method for adjustment in the Contract Sum, the method and the adjustment shall be determined by City on the basis of reasonable expenditures and savings of those performing the Work attributable to the change including, in case of an increase in the Contract Sum, a reasonable allowance for overhead and profit. If the parties still do not agree on the price for a CCD, Contractor may file a Claim per Article 12 of Document 00700 (General Conditions). Contractor shall keep and present, in such form as City may prescribe, an itemized accounting together with appropriate supporting data. Unless otherwise provided in the Contract Documents, costs for the purposes of this paragraph shall be limited to those provided in paragraph of this Section 01250.

4. Pending final determination of cost to City, amounts not in dispute may be included in Applications for Payment. The amount of credit to be allowed by Contractor to City for a deletion or change which results in a net decrease in the Contract Sum shall be actual net cost as confirmed by City. When both additions and credits covering related Work or substitutions are involved in a change, the allowance for overhead and profit shall be figured on the basis of net increase, if any, with respect to that change.

G. City Requested RFP – Procedure:

1. City Requested RFP: Contractor shall furnish a Cost Proposal within 21 Business Days of City's RFP. Upon approval of RFP, City will issue a Change Order directing Contractor to proceed with extra Work. If the parties do not agree on the price for an RFP, City may either issue a CCD or decide the issue per Article 12 of Document 00700 (General Conditions). Contractor shall perform the changed Work notwithstanding any claims or disagreements of any nature.

2. Differing Site Conditions: Contractor shall submit Notices of Differing Site Conditions to resolve problems regarding differing underground Site conditions encountered in the execution of the Work pursuant to paragraph 13.4 of Document 00700 (General Conditions), which shall govern. If City determines that a change in Contract Sum or Contract Time is justified, City will issue RFP or CCD.

3. Hazardous Waste Conditions: Contractor shall submit Notices of Hazardous Waste Conditions to resolve problems regarding hazardous materials encountered in the execution of the Work pursuant to paragraph 13.5 of Document 00700 (General Conditions), which shall govern. If City determines that a change in Contract Sum or Contract Time is justified, City will issue RFP or CCD.

H. Field Instruction–Procedure: Unless otherwise direct, upon receipt of a Field Instruction, Contractor shall promptly proceed with the change in the work involved and advise City of Contractor's agreement or disagreement with the method, if any, provided in the Field Instruction for determining the proposed adjustment in the Contract Sum or Contract Time.

1. If the Field Instruction provides for an adjustment to the Contract Sum, the adjustment shall be based on one of the following methods:

   a. Mutual acceptance of a lump sum properly itemized and supported by sufficient substantiating data to permit evaluation.

   b. Unit prices stated in the Contract Documents or subsequently agreed upon

   c. On a not to exceed amount, which shall be expended based on time and material records of the work prepared and submitted each day by the Contractor to the City in conformance with the Force Account procedures outline in Paragraph 1.06 of this Specification 01250. These record sheets shall itemize all work performed on the Field Instruction work scope. All time and material records must be signed by the City's field representative indicating their agreement that the claimed work occurred. The signature of the City's field representative on the time and material record sheets does not constitute City agreement that the listed work is a contract change or that it is eligible for extra payment.

   d. Cost to be determined in a manner agreed.

2. A Field Instruction signed by Contractor indicates the agreement of Contractor therewith, including adjustment in Contract Sum and Contract Time or the method for determining them. Such agreement shall be effective immediately and shall be recorded as a Change Order.

3. If Contractor does not respond promptly or disagrees with the method for adjustment in the Contract Sum, the method and the adjustment shall be determined by City on the basis of reasonable expenditures and savings of those performing the work attributable to the change, including, in case of an increase in the Contract Sum, a reasonable allowance or overhead and profit. If the parties still do not agree on the price for a Field Instruction, Contractor may file a claim per Paragraph 12 of Document 00700 General Conditions. Contractor shall keep and present, in such form as City may prescribe, an itemized accounting together with appropriate supporting data. Unless otherwise provided in the Contract Documents, costs for the purposes of this paragraph shall be limited to those provided in paragraphs 1.04 and 1.05 below.

4. Pending final determination of cost to City, amounts not in dispute may be included in Applications for Payment. The amount of credit to be allowed by Contractor to City for a deletion or change, which results in a net decrease in the Contract Sum, shall be actual net cost as confirmed by City. When both additions and credits covering related work or substitutions are involved in a change, the allowance for overhead and profit shall be figured on the basis of net increase, if any, with respect to that change.

5. When both additions and credits are included in a Field Instruction, RFP or a any request for additional compensation by Contractor, the Contractor's or Subcontractor's cost estimate shall first calculate the net add or deletion of the changed work before multiplying the quantity of work by the unit cost of the labor, material or equipment.

I. All Changes:

Documentation of Change in Contract Sum and Contract Time

1. Contractor shall maintain detailed records of work done on a time and material basis.

2. Contractor shall document each proposal for a change in cost or time with sufficient data to allow evaluation of the proposal.

3. Contractor shall, on request, provide additional data to support computations for:

   a. Quantities of products, materials, labor and equipment.

   b. Taxes, insurance and bonds.

   c. Overhead and profit.

   d. Justification for any change in Contract Time and new update of Baseline Schedule showing revision due, if any.

   e. Credit for deletions from Contract, similarly documented.

4. Contractor shall support each claim for additional costs, and for work done on a cost and percentage basis, with additional information including:

   a. Credit for deletions from Contract, similarly documented.
   b. Origin and date of claim.
   c. Dates and times work was performed and by whom.
   d. Time records and wage rates paid.
   e. Invoices and receipts for products, materials, equipment and subcontracts, similarly documented.

J. Correlation of Subcontractor Submittals

1. Contractor will revise Schedule of Values and Application for Payment forms to record each authorized Change Order or Field Instruction as a separate line item and adjust the Contract Sum as shown thereon prior to the next monthly pay period.
2. Contractor shall revise the Baseline Schedule updates prior to the next monthly pay period.
3. Contractor shall enter changes in Project Records and Documents prior to the next monthly pay period.

K. For all responses for which the Contract Documents do not provide a specific time period, recipients shall respond within a reasonable time.

1.04 COST DETERMINATION

A. Total cost of extra work or of work omitted shall be the sum of labor costs, material costs, equipment rental costs and specialist costs as defined herein plus overhead and profit as allowed herein. This limit applies in all cases of claims for extra work, whether calculating Cost Proposals, Change Orders or Field Instructions, or calculating claims of all types, and applies even in the event of fault, negligence, strict liability, or tort claims of all kinds, including strict liability or negligence. Contractor may recover no other costs arising out of or connected with the performance of extra work, of any nature. No special, incidental or consequential damages may be claimed or recovered against City, its representatives or agents, whether arising from breach of contract, negligence or strict liability, unless specifically authorized in the Contract Documents.

B. Overhead and Profit:

1. Overhead shall be as defined in Paragraph 1.08 of this Section 01250.
2. Overhead and profit on labor for extra work shall be 15 percent (15%).
3. Overhead and profit on materials for extra work shall be 15 percent (15%).
4. Overhead and profit on equipment rental for extra work shall be 10 percent (10%).

5. When extra a first tier subcontractor performs work, Contractor shall receive a 5 percent (5%) markup on subcontractors' total costs of extra work. First tier subcontractor's overhead and profit on its work shall not exceed 15 percent (15%).

6. When extra work is performed by a lower tier subcontractor, Contractor shall receive a maximum total markup of 5 percent (5%) and the first tier subcontractor shall receive a maximum total of five percent (5%) on the lower tier subcontractors' total costs of extra work, which shall not include overhead and profit that exceeds 15 percent (15%).

7. Notwithstanding the foregoing, in no case shall the total overhead, profit and markup on any extra work exceed twenty-five percent (25%) of the direct cost, notwithstanding the actual number of contract tiers.

8. On proposals covering both increases and decreases in Contract Sum, overhead, profit and commission shall be allowed on the net increase only as determined above. When the net difference is a deletion, no percentage for overhead profit and commission shall be allowed.

9. The markup shall include profit, small tools, cleanup, engineering, supervision, warranties, cost of preparing the cost proposal, jobsite overhead, and home office overhead. No markup will be allowed on taxes, insurance, and bonds.

C. Taxes, Bonds & Insurance:

1. City of Santa Clara and County of Santa Clara Sales Taxes should be included.

2. Federal and Excise Taxes shall not be included.

3. The Contractor's Bond and Insurance costs on first tier subcontractors shall be shown separately and applied to the work by first tier subcontractors and is not included in the 5% markup limitations, nor included in the 15% limitation for the Contractor. The Contractor must provide written support documentation to justify any bond and insurance costs, but these costs shall not exceed 1.75% for the Contractor. Bond and Insurance Costs for any tier subcontractor are included in the markup limitations for overhead and profit.

D. Owner Operated Equipment

When owner-operated equipment is used to perform extra work, Contractor will be paid for equipment and operator as follows:

1. Payment for equipment will be made in accordance with Paragraph 1.05.C of this Section 01250.

2. Payment for cost of labor will be made at no more than rates of such labor established by collective bargaining agreements for type of worker and location of work, whether or not owner-operator is actually covered by such an agreement.

E. Accord and Satisfaction: Every Change Order and accepted CCD shall constitute a full accord and satisfaction, and release, of all Contractor (and if applicable, Subcontractor) claims for additional time, money or other relief arising from or

relating to the subject matter of the change including, without limitation, impacts of all types, cumulative impacts, inefficiency, overtime, delay and any other type of claim. Contractor may elect to reserve its rights to disputed claims arising from or relating to the changed Work at the time it signs a Change Order or approves a CCD, but must do so expressly in a writing delivered concurrently with the executed Change Order or approved CCD, and must also submit a Claim for the reserved disputed items pursuant to Article 12 of Document 00700 no later than 30 days of Contractor's first written notice of its intent to reserve rights.

F Labor Productivity Rates: Labor productivity rates shall be determined based on review of existing project conditions and review of labor productivity rates for this area that are included in RS Means Building, Electrical, Mechanical, and Plumbing Cost Date Publications, and Saylor Publications Current Construction Costs, which are in effect on the date upon which extra work is accomplished and which publication is incorporated herein by reference as though fully set forth herein. If agreement cannot be reached with the Contractor regarding labor productivity rates, the labor productivity rates for this area included in the RS Means Publications for new construction shall take precedence.

1.05 COST BREAKDOWN

A. Labor - Contractor will be paid cost of labor for workers (including working forepersons when authorized by City) used in actual and direct performance of extra work. Labor rate, whether employer is Contractor, subcontractor or other forces, will be sum of following:

1. Actual Base Wages - Actual base wages paid shall include any employer payments to or on behalf of workers for health and welfare, pension, vacation and similar purposes as depicted in the Union Wage Rate Recap (Base Wage) included in the Saylor Publications 2002 Current Construction Costs.

2. Labor Surcharge - Payments imposed by local, county, state and federal laws and ordinances, and other payments made to, or on behalf of, workers, other than actual wages as defined in subparagraph 1 above, such as taxes and insurance. The Labor Surcharge is set forth in Saylor Publications 2002 Current Construction Costs (i.e., Payroll Taxes, Supervision, & Workers Compensation), which is in effect on date upon which extra work is accomplished, and is incorporated herein by reference as though fully set forth herein.

B. Material - The City will only pay for materials furnished by Contractor and necessarily used in performance of extra work. Cost of such materials will be cost, including sales tax, to purchaser (Contractor, subcontractor or other forces) from supplier thereof, except as the following are applicable:

1. If cash or trade discount by actual supplier is offered or available to purchaser, it shall be credited to City notwithstanding fact that such discount may not have been taken.

2. For materials salvaged upon completion of extra work, salvage value of materials shall be deducted from cost, less discounts, of materials.

3. If cost of a material is, in opinion of City, excessive, then cost of material shall be deemed to be lowest current wholesale price at which material is available in quantities concerned delivered to Site, less any discounts as provided in subparagraph 1 above.

C. Equipment Rental

For Contractor or subcontractor-owned equipment, payment will be made at rental rates listed for equipment in the most recent addition of **The Association of Equipment Distributors (AED) Green Book**, which is in effect on date upon which extra work is accomplished and which schedule is incorporated herein by reference as though fully set forth herein. For rented equipment, payment will be made based on actual rental invoices. Equipment used on extra work shall be of proper size and type. If, however, equipment of unwarranted size or type and cost is used, cost of use of equipment shall be calculated at rental rate for equipment of proper size and type. Rental rates paid shall be deemed to cover cost of fuel, oil, lubrication, supplies, small tools, necessary attachments, repairs and maintenance of any kind, depreciation, storage, insurance, and all incidentals. Unless otherwise specified, manufacturer's ratings, and manufacturer-approved modifications, shall be used to classify equipment for determination of applicable rental rates. Individual pieces of equipment or tools not listed in said publication or having a replacement value of two hundred dollars ($200) or less, whether or not consumed by use, shall be considered to be small tools and no payment will be made therefor as payment is included in payment for labor. Rental time will not be allowed while equipment is inoperative due to breakdowns.

1. For equipment on Site, rental time to be paid for equipment shall be time equipment is in operation on extra work being performed or on standby as approved by City. The following shall be used in computing rental time of equipment:

   a. When hourly rates are listed, less than thirty (30) minutes of operation shall be considered to be one-half (1/2) hour of operation.

   b. When daily rates are listed, less than four (4) hours of operation shall be considered to be one-half (1/2) day of operation.

2. For equipment that must be brought to Site to be used exclusively on extra work, cost of transporting equipment to Site and its return to its original location shall be determined as follows:

   a. City will pay for costs of loading and unloading equipment.

   b. Cost of transporting equipment in low bed trailers shall not exceed hourly rates charged by established haulers.

   c. Cost of transporting equipment shall not exceed applicable minimum established rates of California Public Utilities Commission.

   d. Payment for transporting and loading and unloading equipment as above provided will not be made if equipment is used on Work in any other way than upon extra work.

3. Rental period shall begin at time equipment is unloaded at Site of extra work and terminate at end of day on which City directs Contractor to discontinue use of equipment. Excluding Saturdays, Sundays, and legal holidays, unless equipment is used to perform extra work on such days, rental time to be paid per day shall be four (4) hours for zero (0) hours of operation, six (6) hours for four (4) hours of operation and eight (8) hours for eight (8) hours of operation, time being prorated between these parameters. Hours to be paid for equipment, which is operated less than eight (8) hours due to breakdowns, shall not exceed eight (8) less number of hours equipment is inoperative due to breakdowns.

D. Work Performed by Special Forces or Other Special Services

When City and Contractor, by agreement, determine that special service or item of extra work cannot be performed by forces of Contractor or those of any first tier or lower subcontractors, service or extra work item may be performed by specialist. Invoices for service or item of extra work on basis of current market price thereof may be accepted without complete itemization of labor, material, and equipment rental costs when it is impracticable and not in accordance with established practice of special service industry to provide complete itemization. In those instances wherein Contractor is required to perform extra work necessitating a fabrication or machining process in a fabrication or machine shop facility away from Site, charges for that portion of extra work performed in such facility may, by agreement, be accepted as a specialist billing. City must be notified in advance of all off-site work. To specialist invoice price, less credit to City for any cash or trade discount offered or available, whether or not such discount may have been taken, will be added 15 percent (15%) in lieu of overhead and profit provided in Paragraph 1.04.B of this Section 01250.

1.06 FORCE-ACCOUNT

A. If it is impracticable because of nature of work, or for any other reason, to fix an increase or decrease in price definitely in advance, the Contractor may be directed to proceed at a not-to-exceed (NTE) maximum price which shall not under any circumstances be exceeded. Subject to such limitation, such extra work shall be paid for at actual necessary cost for Force-Account Work or at the negotiated cost, as determined by City. The cost for Force-Account Work shall be determined pursuant to paragraphs 1.04 and 1.05 of this Section 01250.

B. Force-Account Work shall be used when it is not possible or practical to price out the changed work prior to the start of that work. In these cases, Force-Account Work will be utilized during the pricing and negotiation phase of the change. Once negotiations have been concluded and a bilateral agreement has been reached, the tracking of the work under Force-Account is no longer necessary. Force-Account Work shall also be used when negotiations between City and Contractor have broken apart and a bilateral agreement on the value of the changed work cannot be reached. City may approve other uses of Force-Account Work.

C. Whenever any Force-Account Work is in progress, definite price for which has not been agreed on in advance, Contractor shall report to City each day in writing in detail amount and cost of labor and material used, and any other expense incurred in Force-Account Work on preceding work day as required herein. No claim for

compensation for Force-Account Work will be allowed unless report shall have been made.

D. Whenever Force-Account Work is in progress, definite price for which has not been agreed on in advance, Contractor shall report to City when seventy-five percent (75%) of the not-to-exceed amount has been expended.

E. Force-Account Work shall be paid as extra work under this Section. Above described methods of determining payment for work and materials shall not apply to performance of work or furnishings of material, which, in judgment of City, may properly be classified under items for which prices are established in Contract Documents.

1.07 CITY FURNISHED MATERIALS

City reserves right to furnish materials, as it deems advisable, and Contractor shall have no claims for costs and overhead and profit on such materials.

1.08 OVERHEAD DEFINED

The following constitutes charges that are deemed included in overhead for all contract modifications, including Force-Account Work, and work required by Field Instructions, whether incurred by Contractor, subcontractors, or suppliers:

1. Drawings: field drawings, sketches, etc. including submissions of drawings
2. Routine field inspection of work proposed
3. General Superintendence
4. General administration and preparation of cost proposals, schedule analysis, change orders and other supporting documentation as necessary
5. Computer services
6. Reproduction services
7. Salaries of project engineer, superintendent, timekeeper, storekeeper and administrative assistants, secretaries
8. Janitorial services
9. Temporary on-site facilities
   a. Offices
   b. Telephones
   c. Plumbing
   d. Electrical: Power, lighting
   e. Platforms
   f. Fencing, etc.
   g. Water
10. Home office expenses.
11. Subcontractor Insurance and Bond Premiums/Costs.
12. Procurement and use of vehicles and fuel used coincidentally in base bid work.
13. Surveying
14. Estimating
15. Protection of work
16. Handling and disposal fees
17. Small tools and equipment valued at less than $200.
18. Consumables and attrition
19. Cartage and Vertical transportation (Elevators, Vertical Resource Lifts, etc.)
20. Trucking within 50 miles of the Project Site

21. Parking expenses of any field labor, foreman, office personnel and superintendents
22. Employee truck and gas expenses
23. Cleanup as a result of change order work
24. Final cleanup
25. Other incidental work

1.09 RECORDS AND CERTIFICATION

A. Force-Account (cost reimbursement) charges shall be recorded daily upon Cost Breakdown for Contract Modification Form. Contractor or authorized representative shall complete and sign form. Contract Modification Form shall provide names and classifications of workers and hours worked by each, itemize materials used, and also list size type and identification number of equipment, and hours operated, and shall indicate work done by specialists.

B. No payment for Force-Account Work shall be made until Contractor submits original invoices substantiating materials and specialists charges. No payment for Field Instruction Work shall be made until negotiations have been completed and the subsequent Change Order issued.

C. City shall have the right to audit all records in possession of Contractor or first tier subcontractor s or lower tier subcontractors relating to activities covered by Contractor's claims for modification of Contract, including Force-Account Work and Field Instruction Work, as set forth in Document 0700 General Conditions.

D. Further, City shall have right to audit, inspect, or copy all records maintained in connection with this Contract, including financial records, in possession of Contractor relating to any transaction or activity occurring or arising out of, or by virtue of, the Contract. If Contractor is a joint venture, right of City shall apply collaterally to same extent to records of joint venture sponsor, and of each individual joint venture member.

PART 2 PRODUCTS

Not applicable to this section.

PART 3 EXECUTIONS

Not applicable to this section.

///

///

///

///

///

///

COST
PROPOSAL

City of Santa Clara PALM SUBSTATION 60kV EXTENSION Project

Date: _____

Project Number 2375B

In Response To _____
RFP # or CRCO #

City Project Office
1500 Warburton Avenue
Santa Clara, CA 95050

Subject Ref. No:

(for Project Manager

_____
(650) _____
use only)

From: _____
_____
_____

To: City of Santa Clara

This Cost Proposal is in response to the above referenced form

Brief description of change(s):
_____
_____

| ITEM DESCRIPTION | PRIME CONTR. | SUB 1 (NAME) | SUB 2 (NAME) | SUB 3 (NAME) | SUB 4 (NAME) | TOTAL |
|---|---|---|---|---|---|---|
| | | | | | | |
| Material | | | | | | |
| Direct Labor Cost | | | | | | |
| Equipment | | | | | | |
| Other (Specify) Extended Overhead | | | | | | |
| | | | | | | |
| Total Cost | | | | | | |
| | | | | | | |
| Subcontractor's Overhead and Profit 15% | | | | | | |
| Contractor's Overhead and Profit 15% | | | | | | |
| O/P to Contractor For Subcontractor' work at 5% | | | | | | |

| | | | | | | |
|---|---|---|---|---|---|---|
| | | | | | | |
| **Bond and Insurance** | | | | | | |
| **(% of total cost above not including any OIP)** | | | | | | |
| | | | | | | |
| **GRAND TOTAL** | | | | | | |
| | | | | | | |
| **REQUESTED CHANGE IN CONTRACT TIME DAYS** | | | | | | |

**By:** _____
**Contractor**

**Signature:** _____ **Date:** _____

**END OF SECTION**

THIS PAGE

INTENTIONALLY

LEFT BLANK

# DOCUMENT 01315

# PROJECT MEETINGS

## PART 1 GENERAL

### 1.01 SUMMARY

A. This section describes the required project meetings for this Work. These meetings include:

1. Preconstruction Conference.
2. Initial Contract Schedule Review Meeting.
3. Weekly Progress Meetings.
4. Progress Schedule and Billing Meetings.
5. Special Meetings.
6. Safety Meetings
7. Utility Coordination Meetings

B. Related Sections.

1. Section 01100: Summary of Work
2. Section 01200: Measurement and Payment
3. Section 01320: Progress Schedules and Reports
4. Section 01330: Submittals

### 1.02 PRECONSTRUCTION CONFERENCE

A. City will call for and administer Preconstruction Conference at time and place to be announced. Conference will occur as soon after award as can be reasonably scheduled.

B. Contractor, all subcontractors, and major suppliers shall attend Preconstruction Conference.

C. Agenda will include, but not be limited to, the following items.

1. Schedules
2. Personnel and vehicle permit procedures
4. Use of premises
5. Location of the Contractor's on-site facilities
6. Security
7. Housekeeping
8. Submittals and Requests for Information procedures
9. Inspection and testing procedures, on-site and off-site
10. Utility shutdown procedures
11. Control and reference point survey procedures
12. Injury and Illness Prevention Program
13. Contractor's Initial Contract Schedule

14. Contractor's Schedule of Values/Cost Loaded Schedule
15. Contractor's Schedule of Submittals
16. Turnover Procedures for Contract Items

D. City will distribute copies of minutes to attendees. Attendees shall have seven (7) days to submit comments or additions to minutes. Minutes will constitute final memorialization of results of conference.

1.03 INITIAL CONTRACT SCHEDULE REVIEW MEETINGS

A. Contractor shall meet with the City after the Award of Contract and before the Notice to Proceed and review Contractor's draft Shop Drawing and Sample Submittal Schedule, draft Schedule of Values, and Draft Initial Contract Schedule.

B. Authorized representative in Contractor's organization, designated in writing, that will be responsible for working and coordinating with City relative to preparation and maintenance of schedules shall attend initial review meeting.

C. Contractor shall meet as required in Section 01320 to review the schedule requirements and provide schedules in compliance with Specification Section 01320.

1. Contractor shall have its construction manager, general site superintendent, scheduler, and key subcontractor representatives, as required by City, in attendance. The meeting will take place over a continuous one-day period.

2. City's review will be limited to submittal's conformance to Contract Documents requirements, including, but not limited to, coordination requirements. City's review may also include:

a. Clarifications of Contract Requirements.
b. Directions to include activities and information missing from submittal.
c. Requests to Contractor to clarify its schedule.

3. After the Schedule Review Meeting, Contractor shall respond in writing in accordance with the requirements of Specification Section 01320 to all questions and comments expressed by City at the Meeting.

D. City will administer scheduling meetings and shall distribute minutes of scheduling meetings to attendees by posting said meetings on the project website. Attendees shall have seven (7) calendar days to submit comments or additions to minutes. Minutes will constitute final memorialization of results of conference.

1.04 WEEKLY PROGRESS MEETINGS

A. City will schedule and administer Weekly Progress Meetings throughout duration of Work. Progress meetings will be held weekly unless otherwise directed by City.

1. Meetings shall be held at City Construction Manager's on-site office, unless otherwise directed by City.
2. The meeting minutes will be the agenda for the subsequent progress meeting.

3. A City representative will preside at meeting.
4. The City will distribute minutes to Contractor by posting said meetings on the project website, which is described in Specification Section 01318. Minutes will constitute final memorialization of results of meeting.

B. The Contractor's construction manager, general site superintendent, major subcontractors and suppliers, City, Engineer, and others as appropriate shall attend progress meetings to review and discuss agenda items.

C. Agenda will contain the following items as appropriate:

1. Review, revise and necessary, and approve previous meeting minutes
2. Review of work progress since last meeting
3. Status of Construction Work Schedule, delivery schedules, adjustments
4. Submittal, RFI, Field Instructions and Change Order status
5. Other items affecting progress of work
6. Review of the Contractor's safety program activities and results, including report on all serious injury and/or damage accidents

1.05 PROGRESS SCHEDULE AND BILLING MEETINGS

A. A meeting will be held once each month in accordance to Specification Sections 01200 and 01320 to review the schedule update submittal and progress payment application. The Contractor shall provide the required schedules and progress payment information prior to the meeting in accordance Specification Sections 01200 and 01320.

1. At this meeting, at a minimum, the following items will be reviewed: Percent complete of each activity; time impact evaluations for change orders and time extension request; actual and anticipated activity sequence changes; actual and anticipated duration changes; and actual and anticipated contractor delays.

2. These meetings are considered a critical component of overall monthly schedule update submittal and Contractor shall have appropriate personnel attend. At a minimum, Contractor's Construction Manager, General Superintendent and Scheduler shall attend these meetings.

3. Contractor shall plan on the meeting taking no less than four (4) hours.

1.06 SPECIAL MEETINGS

A. Special meetings may be called by any party by notifying all desired participants and City five (5) days in advance, giving reason for meeting. Special meetings may be held without advance notice in emergency situations.

B. At any time during the progress of Work, City shall have authority to require the Contractor to attend meetings with any or all of the subcontractors engaged in Work or contractors in other work, and notice of such meetings shall be duly observed and complied with by Contractor.

C. Contractor shall schedule and conduct coordination meetings as necessary to discharge coordination responsibilities in Division 0 through 17 of the Contract Specifications. Contractor shall give City written notice of coordination meetings within 5 calendar days. Participation by representatives of the City is optional. Contractor shall maintain and distribute minutes of coordination meetings to all attendees and the City. Attendees shall have seven (7) days to submit comments or additions to minutes. Minutes will constitute final memorialization of results of coordination meetings.

D. Contractor shall schedule pre-construction meetings before the Contractor or its subcontractors commence any type of new work in the field. The City shall be notified in writing two (2) workdays in advance of all pre-construction meetings. At a minimum, the purpose of these meetings is to review plans, specifications and reviewed submittals before new work commences to facilitate the completion of work in accordance with the Contract Documents. The City's Construction Manager and the Engineer shall be invited to attend these meetings and the Contractor shall be responsible for presiding at these meeting, as well as preparing and distributing meeting minutes within three (3) work days of each meeting.

1.07 SAFETY MEETINGS

A. Contractor shall conduct monthly Contractor Safety Committee meetings.

B. Contractor shall conduct weekly toolbox safety talks.

1.08 UTILITY COORDINATION MEETINGS

A. Contractor shall plan, coordinate and schedule meetings with all utility companies and City forces installing utilities. The City's Construction Manager and the Engineer shall be invited to attend these meetings and the Contractor shall be responsible for presiding at these meeting, as well as preparing and distributing meeting minutes within three (3) work days of each meeting. Additional requirements regarding the coordination and scheduling of utility work by others is included, but not limited to, Specification Section 01100, Summary of Work, the Contract General Conditions and the Contract Drawings.

PART 2 PRODUCTS

Not used.

PART 3 EXECUTIONS

Not used.

**END OF SECTION**

# DOCUMENT 01320

## Progress Schedules & Reports

PART 1 GENERAL

1.01 SUMMARY

Perform scheduling of Work under this Contract in accordance with requirements of this Section 01320.

A. Development of schedule, cost, and resource loading of the Progress Schedule, monthly payment requests, and project status reporting requirements of the Contract Documents shall employ scheduling as required in this Section 01320.

B. The Schedule shall be cost-loaded based on Schedule of Values as approved by City.

C. Submit schedules and reports as specified in 00700 (General Conditions).

D. Upon Award of Contract, immediately commence development of Initial Schedule to ensure compliance with schedule submittal requirements.

E. Contractor's obligations under this Section 01320 are hereby deemed material obligations justifying City's remedies for default if Contractor fails to perform. Nothing in this paragraph 1.1.C of this Section 01320 or the lack of an express statement that any other Contract Documents provision is or is not material shall be considered in determining whether any such other provision is material.

F. Employ competent scheduling personnel or a schedule consultant with experience performing scheduling required herein on two (2) prior, similar projects.

1.02 GENERAL

Progress Schedule shall be based on and incorporate milestone and completion dates specified in Contract Documents.

A. Overall time of completion and time of completion for each milestone shown on Progress Schedule shall adhere to times in Document 00520 (Agreement), unless an earlier (advanced) time of completion is requested by Contractor and agreed to by City. A Change Order shall formalize any such agreement.

B. City is not required to accept an earlier (advanced) schedule, i.e., one that shows early completion date(s) for the Contract Time.

C. Contractor is not entitled to extra compensation in event agreement is reached on an earlier (advanced) schedule and Contractor completes its Work, for whatever reason, beyond completion date shown in earlier (advanced) schedule but within the Contract Time.

D. A schedule showing the Work completed in less than the Contract Time, which has been accepted by City, shall be considered to have Project Float. The Project Float is the time

between the scheduled completion of the Work and Contract Substantial Completion. Project Float is a resource available to both City and Contractor.

E. Float Ownership: Neither City nor Contractor owns float. The Project owns the float. As such, liability for delay of any Substantial Completion or Final Completion date rests with the party whose actions, last in time, actually cause delay to a Substantial Completion or Final Completion date.

For example, in the event of unexcused delay by Party A and Party B, and if Party A uses some, but not all of the float and Party B later uses remainder of the float as well as additional time beyond the float, Party B shall be liable for the time that represents a delay to the Substantial Completion date.

Under this scenario, Party A would not be responsible for the time since it did not consume all of the float and additional float remained; therefore, the Substantial Completion Date was unaffected.

F. Progress Schedule shall be the basis for evaluating job progress, payment requests, and time extension requests. Responsibility for developing Contract schedule and monitoring actual progress as compared to Progress Schedule rests with Contractor.

G. Failure of Progress Schedule to include any element of the Work or any inaccuracy in Progress Schedule will not relieve Contractor from responsibility for accomplishing the Work in accordance with the Contract. City's acceptance of Schedule shall be for its use in monitoring and evaluating job progress, payment requests, and time extension requests, and shall not, in any manner, impose a duty of care upon City, or act to relieve Contractor of its responsibility for means and methods of construction.

H. Transmit each item under form approved by City or following Section 01330.

I. Identify Project with the City Contract number, and name of Contractor.

J. Provide space for Contractor's approval stamp and City's review stamps.

K. Submittals received from sources other than Contractor will be returned to Contractor without City's review.

## 1.03 INITIAL AND ORIGINAL PROGRESS SCHEDULE

Initial Schedule submitted for review at the Pre-construction Conference shall serve as Contractor's schedule for up to 30 Days after the Notice to Proceed.

A. Initial Schedule must indicate detailed plan for the Work to be completed in first 30 Days of the Contract; details of planned mobilization of plant and equipment; sequence of early operations; and procurement of materials and equipment. Show Work beyond 30 Days in summary form.

B. Contractor shall submit its Original Schedule for review no later than first progress payment. Original Schedule and all updates shall comply with all standards herein.

C. All Schedules shall be time-scaled.

D. Except as otherwise expressly provided in this Section 01320, meet with City to review and discuss the each Schedule (i.e., Initial, Original and monthly updates) within seven (7) days after each Schedule has been submitted to City.

E. City's review and comment on any Schedule shall be limited to Contract conformance (with sequencing, coordination, and milestone requirements).

F. Contractor shall make corrections to Schedule necessary to comply with Contract requirements and shall adjust Schedule to incorporate any missing information requested by City. Resubmit Initial Schedule if requested by City.

G. If Contractor is of the opinion that any of the Work included on its Schedule has been impacted, submit to City a written TIE in accordance with Section 01320. The TIE shall be based on the most current update of the Initial Schedule.

1.04 SCHEDULE FORMAT AND LEVEL OF DETAIL

Each Schedule (Initial, Original and updates) shall indicate all separate fabrication, procurement and field construction activities required for completion of the Work, including but not limited to the following:

A. All Contractor, Subcontractor, and assigned Contractor work shall be shown in a logical work sequence that demonstrates a coordinated plan of work for all contractors. The intent is to provide a common basis of acceptance, understanding, and communication, as well as interface with other contractors.

B. Activities related to the delivery of Contractor and City-furnished equipment to be Contractor-installed per Contract shall be shown.

C. All activities shall be identified through codes or other identification to indicate the building (i.e. buildings, Site work) and Contractor/Subcontractor responsibility to which they pertain.

D. Break up the Work schedule into activities of durations of approximately twenty-one (21) days or less each, except for non-field construction activities or as otherwise deemed acceptable by City.

E. Show the critical path in red. For each activity, show early start, late start, early finish, late finish, durations measured in Days, float, resources, predecessor and successor activities, planned workday/week for the activity, man power loading, and scheduled/actual progress payments.

F. Seasonal weather conditions (which do not constitute a delay as defined herein) shall be considered in the planning and scheduling of all work influenced by high or low ambient temperatures or presence of high moisture for the completion of the Work within the allotted Contract Time.

G. Failure by Contractor to include any element of Work required for performance of the Work on the detailed construction schedule shall not excuse Contractor from completing all Work required within the Contract Time.

H. A two-week "look ahead," detailed daily bar chart schedule shall be updated and issued weekly.

I. Utilize computer-scheduling software, such as Microsoft Project software or approved equivalent, for all scheduling including schedule updates.

1.05 MONTHLY SCHEDULE UPDATE SUBMITTALS

Following acceptance of Contractor's Initial Schedule, monitor progress of Work and adjust Schedule each month to reflect actual progress and any anticipated changes to planned activities.

A. Each Schedule update submitted shall be complete, including all information requested for the Initial Schedule and Original Schedule submittal.

B. Each update shall continue to show all Work activities including those already completed. These completed activities shall accurately reflect "as built" information by indicating when activities were actually started and completed, and Contractor warrants the accuracy of as-built information as shown.

C. A meeting will be held on approximately the 25th of each month to review the Schedule update submittal and progress payment application.

D. At this meeting, at a minimum, the following items will be reviewed: Percent complete of each activity; TIEs for Change Orders and Time Extension Request; actual and anticipated activity sequence changes; actual and anticipated duration changes; and actual and anticipated Contractor delays.

E. These meetings are considered a critical component of overall monthly schedule update submittal; have appropriate personnel attend. At a minimum, Contractor's General Superintendent and Scheduler shall attend these meetings.

F. Plan on the meeting taking no less than four (4) hours.

G. Within five (5) days after monthly Schedule update meeting, submit the updated Schedule.

H. Within five (5) days of receipt of above-noted revised submittals, City will either accept or reject monthly schedule update submittal.

I. If accepted, percent complete shown in monthly update will be basis for Application for Payment by Contractor. The schedule update shall be submitted as part of Contractor's Application for Payment.

J. If rejected, update shall be corrected and resubmitted by Contractor before the Application for Payment is submitted.

K. Updating, changing or revising of any report, curve, schedule or narrative submitted to City by Contractor under this Contract, nor City's review or acceptance of any such report, curve, schedule or narrative shall not have the effect of amending or modifying, in any way, the Contract Substantial Completion date or milestone dates or of modifying or limiting, in any way, Contractor's obligations under this Contract.

1.06 SCHEDULE REVISIONS

Updating the Schedule (Initial and Original) to reflect actual progress shall not be considered revisions to the Schedule. Since scheduling is a dynamic process, however, revisions to activity durations and sequences are expected on a monthly basis.

A. To reflect revisions to the Schedule, provide City with a written narrative with a full description and reasons for each Work activity revised. For revisions affecting the sequence of Work, provide a schedule diagram that compares the original sequence to the revised sequence of Work. Provide the written narrative and schedule diagram for revisions three (3) days in advance of the monthly schedule update meeting. Clearly show and discuss any changes in the critical path.

B. Schedule revisions shall not be incorporated into any schedule update until City has reviewed the revisions. City may request further information and justification for schedule revisions and, within three (3) days, provide City with a complete written narrative response to City's request.

C. If City does not accept Contractor's revision, and Contractor disagrees with City's position, Contractor has seven Days from receipt of City's letter rejecting the revision, to provide a written narrative providing full justification and explanation for the revision. Contractor's failure to respond in writing within seven (7) days of City's written rejection of a schedule revision shall be contractually interpreted as acceptance of City's position, and Contractor waives its rights to subsequently dispute or file a claim regarding City's position. If Contractor files a timely response as provided in this paragraph, and the parties are still unable to agree, Contractor's sole right shall be to file a claim as provided in Document 00700 (General Conditions), Article 12.

D. At City's discretion, Contractor can be required to provide Subcontractor certifications of performance regarding proposed schedule revisions affecting said Subcontractors.

1.07 RECOVERY SCHEDULE

If a Schedule update shows a substantial completion date 21 Days beyond any Contract Substantial Completion date, or individual Milestone completion dates, submit to City within seven Days the proposed revisions to recover the lost time. As part of this submittal, provide a written narrative for each revision made to recapture the lost time. If the revisions include sequence changes, provide a schedule diagram comparing the original sequence to the revised sequence of Work. If City requests, show the intended critical path; secure appropriate Subcontractor and supplier consent to the recovery Schedule; submit a narrative explaining trade flow and construction flow changes, duration changes, added/deleted activities, critical path changes and identify all near critical paths and man hour loading assumptions for major Subcontractors.

A. The revisions shall not be incorporated into any Schedule update until City has reviewed the revisions.

B. At City's discretion, Contractor can be required to provide Subcontractor certifications for revisions affecting said Subcontractors.

1.08 TIME IMPACT EVALUATION FOR CHANGE ORDERS AND OTHER DELAYS

When Contractor is directed to proceed with changed work, prepare and submit, within 14 Days from the direction to proceed, a TIE that includes both a written narrative and a schedule diagram depicting how the changed work affects other schedule activities. The schedule diagram shall show how Contractor proposes to incorporate the changed work in the schedule, and how it impacts the current Schedule update critical path or otherwise. Contractor is also responsible for requesting time extensions based on the TIE's impact on the critical path. The diagram shall be tied to the main sequence of scheduled activities to enable City to evaluate the impact of changed work to the scheduled critical path.

A. Contractor is responsible for all costs associated with the preparation of TIEs, and the process of incorporating TIEs into the current schedule update. Provide City with four copies of each TIE.

B. Once agreement has been reached on a TIE, the Contract Time will be adjusted accordingly. If agreement is not reached on a TIE, the Contract Time may be extended in an amount City allows, and Contractor may submit a claim for additional time claimed by Contractor as provided in Document 00700 (General Conditions).

1.09 TIME EXTENSIONS

Contractor is responsible for requesting time extensions for time impacts that, in the opinion of Contractor, impact the critical path of the current schedule update. Notice of time impacts shall be given in accordance with Document 00700 (General Conditions).

a) Where an event for which City is responsible impacts the projected Substantial Completion date, provide a written mitigation plan, including a schedule diagram, which explains how (e.g., increase crew size, overtime, etc.) the impact can be mitigated. Also include a detailed cost breakdown of the labor, equipment, and material Contractor would expend to mitigate City-caused time impact. Submit mitigation plan to City within 14 Days from the date of discovery of said impact. Contractor is responsible for the cost to prepare the mitigation plan.

b) Failure to request time, provide TIE, or provide the required mitigation plan will result in Contractor waiving its right to a time extension and cost to mitigate the delay.

c) No time will be granted under the Contract Documents for cumulative effect of changes.

d) City will not be obligated to consider any time extension request unless requirements of Contract Documents are complied with.

e) Failure of Contractor to perform in accordance with the current schedule update shall not be excused by submittal of time extension requests.

f) Notwithstanding any other provision of this Section 01320, if Contractor does not submit a TIE within the required 14 Days for any issue, Contractor hereby agrees that Contractor does not require a time extension for that issue.

## 1.10 PROJECT STATUS REPORTING

In addition to submittal requirements for scheduling identified in this Section 01320, provide a monthly project status report (i.e., written narrative report) to be submitted in conjunction with each Schedule as specified herein. Status reporting shall be in form specified in this paragraph 1.10 below.

a) Prepare monthly written narrative reports of status of Project for submission to City. Written status reports shall include:

b) Status of major Project components (percent complete, amount of time ahead or behind schedule) and an explanation of how Project will be brought back on schedule if delays have occurred.

c) Progress made on critical activities indicated on each Schedule, including inspections.

d) Explanations for any lack of work on critical path activities planned to be performed during last month.

e) Explanations for any schedule changes, including changes to logic or to activity durations.

f) List of critical activities scheduled to be performed during the next month.

g) Status of major material and equipment procurement.

h) Any delays encountered during reporting period.

i) Provide printed report indicating actual versus planned resource (labor, materials and equipment) loading for each trade and each activity. This report shall be provided on weekly and monthly basis.

j) Actual resource shall be accumulated in field by Contractor, and shall be as noted on Contractor's daily reports. These reports will be basis for information provided in monthly and weekly printed reports.

k) Explain all variances and mitigation measures.

l) Contractor may include any other information pertinent to status of Project. Include additional status information requested by City at no additional cost.

m) Status reports, and the information contained therein, shall not be construed as claims, notice of claims, notice of delay, or requests for changes or compensation.

n) At the close of each workday provide City with report of Contractor and its Subcontractors' work activities for that day, including trades, equipment, work activities worked on, staff levels, and equipment deliveries.

## PART 2 PRODUCTS – NOT USED

## PART 3 EXECUTION – NOT USED

END OF SECTION

THIS PAGE

INTENTIONALLY

LEFT BLANK

# DOCUMENT 01330

## SUBMITTAL PROCEEDURES

PART 1 GENERAL

1.01 SUMMARY

A. This section describes general requirements for submittals for the Work:

1. Procedures
2. Schedule of Shop Drawing and Sample Submittals
3. Safety Plan
4. Progress Schedule
5. Product Data
6. Shop drawings
7. Samples
8. Coordination Drawings (Optional If Applicable)
9. Quality Control Submittals
   a. Design Data
   b. Test Reports
   c. Certificates
   d. Manufacturers' Instructions
   e. Material Safety Data Sheets
10. Machine Inventory Sheets
11. Operations and Maintenance Manuals
12. Computer Programs
13. Project Record Documents

B. Related Sections

1. Section 01100: Summary of Work
2. Section 01200: Measurement and Payment
3. Section 01250: Modification Procedures
4. Section 01320: Progress Schedules and Reports
5. Section 01540: Site Security and Safety
6. Section 01770: Contract Closeout
7. Section 01780: Project Record Documents

1.02 PROCEDURES

A. Submit at Contractor's expense, in multiple sets, Schedule of Shop Drawing and Sample Submittals, Safety Plans, Coordination Drawings, Traffic Plan, Contract Schedules, Product Data, Shop Drawings, Samples, Storm Water Pollution Prevention Plan, Quality Control Data, Machine Inventory Sheets, Operations and Maintenance

Manuals, Computer Programs, and Project Record Documents Seismic Submittal Review Forms, where specified in Division 2 through 16. Forms are attached at the end of this Section 01330. required by the Contract Documents. Submit these submittals simultaneously to City at the Site and to the Engineer at their office for review in accordance with accepted schedule of Shop Drawings and Samples submittals.

B. Transmit each original and copy of each item with a submittal cover and a single transmittal form provided by City. Identify Project; Contractor, subcontractor, major supplier, pertinent drawing sheet and detail number, and specification section number as appropriate. Where manufacturer's standard drawings or data sheets are used, they shall be marked clearly to show those portions of the data that are applicable to this project. Submittals shall be submitted based on each technical specification section. Submittals containing information about more than one specification section will be returned for resubmittal. Submittals shall include all information requested by each specification section. (No partial submittals.) Incomplete submittals will be returned without review. Provide a log number and reference to Specifications Section and/or Plan sheets and details, for each submittal for ease of identification of submittal, in the format required by the City provided submittal transmittal form. If the Contractor fails to provide the required information the submittal will be returned as incomplete without review. The Contractor shall include in its Initial Contract Schedule and subsequent Baseline Schedule updates at least **twenty-one (21) calendar days** for the review of shop drawings. The City reserves the right to increase the review period for selected shop drawings and other submittals, which will be communicated at the time of the City's review of the Contractor's Initial Contract Schedule. Submittals which require finishes or colors to be selected by the Engineer will be held and reviewed together after all related materials have been submitted.

C. The data shown on the Shop Drawings shall be complete with respect to quantities, dimensions, specified performance and design criteria, materials and similar data to show the materials and equipment Contractor proposes to provide and to enable City review of the information for the limited purposes specified below. Samples shall be identified clearly as to material, supplier, pertinent data such as catalog numbers and the use for which it is intended and otherwise as may be required to enable to review of the submittal. The number of each Sample to be submitted shall be three unless otherwise specified in the Specifications.

D. At the time of each submission, Contractor shall give City specific written notice of all variations, if any, that the Shop Drawing or Sample submitted may have from the requirements of the Contract Documents, and the reasons therefore. This written notice shall be in a written communication attached to the submittal transmittal form, and the information shall also be noted on the submittal cover sheet. In addition, Contractor shall cause a specific notation to be made on each Shop Drawing and Sample submitted for review of each such variation. If City accepts deviation, City shall note its acceptance on the returned submittal transmittal form and, if necessary, issue appropriate Contract Modification.

E. Submittal coordination and verification is responsibility of Contractor; this responsibility shall not be delegated in whole or in part to subcontractors or suppliers. Before submitting each Shop Drawing or Sample, Contractor shall have reviewed and coordinated each Shop Drawing or Sample with other Shop Drawings and Samples

and with the requirements of the Work and the Contract Documents, and shall have determined and verified:

1. All field measurements, quantities, dimensions, specified performance criteria, installation requirements, materials, catalog numbers and similar information with respect thereto.

2. All materials with respect to intended use, fabrication, shipping, handling, storage, assembly and installation pertaining to the performance of the Work; and

3. All information relative to Contractor's sole responsibilities and of means, methods, techniques, sequences and procedures of construction and safety precautions and programs incident thereto.

F. Contractor's submission to City of a Shop Drawing or Sample submittal will constitute Contractor's representation that it has satisfied its obligations under the Contract Documents, and as set forth immediately above, with respect to Contractor's review and approval of that submittal.

G. Designation of work "by others", if shown in submittals, shall mean that work will be responsibility of Contractor rather than subcontractor or supplier who has prepared submittals.

H. After review by City or Engineer of each of Contractor's submittals, one set of submittals will be returned to Contractor with actions defined as follows:

1. REVIEWED- Reviewed subject to contract requirements and its compatibility with future submittals for portions of the work not covered in this submittal. Does not constitute approval of deletion of specified or required items unless specifically noted in Submittal.

2. REVIEWED AS NOTED (NO RESUBMISSIONS REQUIRED) -."Reviewed subject to making corrections noted and to contract requirements..." Reviewed subject to contract requirements and its compatibility with future submittals for portions of the work not covered in this submittal. Does not constitute approval of deletion of specified or required items unless specifically noted in Submittal.

3. REVISE AND RESUBMIT – Significant comments or complexity that must be resolved by Contractor, and resubmitted for subsequent review by City, before work can proceed. .

4. REJECTED - RESUBMIT - Submitted material does not conform to Plans and Specifications in major respect. Resubmit in conformance with Contract Documents.

I. Contractor shall make a complete and acceptable submittal (i.e. a submittal receiving a reviewed or reviewed as noted status) at least by second submission. City reserves the right to deduct monies from payments due Contractor to cover additional costs of review beyond the second submission. Illegible submittals will be rejected and returned to Contractor for resubmission. Contractor shall be in breach of the Contract

if following the second submittal, which City determines falls within categories 3 or 4 above, the Contractor does not provide a subsequent re-submittal that obtains a category 1 or 2 review by the City or Engineer.

J. Favorable review will not constitute acceptance by City of any responsibility for the accuracy, dimensions, or coordination and completeness of the submittals. Accuracy, dimensions, coordination, and completeness of Submittals shall be sole responsibility of Contractor, including responsibility to backcheck comments, corrections, and modifications from City's review before fabrication. Contractor, subcontractors, or suppliers may prepare submittals, but Contractor shall ascertain that submittals meet requirements of Contract Documents, while conforming to structural space and access conditions at point of installation. City's review will be only to determine if the items covered by the submittals conform to the information given in the Contract Documents and if they are compatible with the design concept of the completed Project as indicated by the Contract Documents. Favorable review of submittal, method of work, or information regarding materials and equipment Contractor proposes to furnish shall not relieve Contractor of responsibility for errors therein and shall not be regarded as assumption of risks or liability by City, or any officer or employee thereof, and Contractor shall have no claim under Contract on account of failure or partial failure or inefficiency or insufficiency of any plan or method of work or material and equipment so reviewed. Favorable review shall be considered to mean merely that City has no objection to Contractor using, upon his own full responsibility, the plan or method of work proposed, or materials and equipment proposed.

K. City's review does not extend to the means, methods, techniques, sequences or procedures of construction or to safety precautions or programs incident thereto. The review of separate item's does not indicate review of the assembly in which the item functions.

L. Submit complete initial submittal for those items where required by individual specification Sections. Complete submittal shall contain sufficient data to demonstrate that items comply with Specifications, shall meet minimum requirements for submissions cited in technical specifications, include motor data and seismic anchorage certifications, where required, and include necessary revisions required for equipment other than that used for the basis of the design. If Contractor submits incomplete initial submittal, submittal may be returned to Contractor without review.

M. It shall be Contractor's responsibility to copy, conform and distribute reviewed submittals in sufficient numbers for Contractor's files, subcontractors and vendors.

N. After City's review of submittal, revise as noted and resubmit if required. Identify changes made since previous submittal.

   1. Fabrication or work that requires a resubmittal is not allowed until the resubmittal is received as approved by the Contractor. Contractor proceeds at his risks for work and materials which have not been accepted as meeting contract documents.

O. Distribute copies of reviewed submittals to concerned persons. Instruct recipients to promptly report any inability to comply with provisions.

P. All shop drawings and submittals shall be number identified by Contractor, prior to submission to City, in accordance with the following:

1. Contractor shall number each submittal according to the specification section and sequentially within the specification section as the basis for number identification of all shop drawings and submittals.

2. Include the submittal number under which each submittal is made on a submittal cover sheet, the form for which will be provided by City, attached to: every copy of each shop drawing, product data, sample, certification, O & M manual, etc.

3. If the submittal is a resubmittal (including without limitation after an initial submittal is rejected, returned not reviewed or marked revise as noted and resubmit), add the suffix designation "-R1" Subsequent re-submittals must be identified by the submittal number followed by "-R" and a sequential number (i.e.: "-R1", "-R2", "-R3", etc.)

4. All submittals shall include all information requested by each specification section. No partial submittals will be accepted unless previously authorized by the City. In the event a partial submittal is authorized, each partial submittal (as opposed to resubmittal) shall be given a suffix letter (i.e. 14240A, 14240B, etc.)

5. Number Installation, Operation, and Maintenance Manuals with original root number of the approved Submittal for the item.

Q. Submission Requirements

1. Schedule submissions to provide for at least two (2) complete review cycles before dates so as to cause no delay and to allow adequate time for review, re-submittal and re-review, taking into account complexity of each submittal and inter-relatedness with other submittals reviewed submittals will be needed, to avoid impact to the project schedule.

2. Shop Drawings: The Contractor shall submit two **(2)** copies of shop drawings to the City's Field Office at the Site and four **(4)** copies to the Engineer's office in San Francisco. The City will return one **(1)** reviewed copy to the Contractor.

3. Submittals: The Contractor shall submit three **(3)** copies of each submittal to the City's Field Office at the Site and four **(4)** copies to the Engineer's office San Francisco. The City will return one **(1)** reviewed copy to the Contractor.

4. Samples: The Contractor shall submit two **(2)** samples of each product or finish to the City's Field Office at the Site and three **(3)** samples to the Engineer's office in San Francisco. The City will return two **(2)** samples to the Contractor.

5. If Contractor desires more copies of reviewed submittals, then Contractor shall either submit additional copies or make copies from the returned submittals. Submittals requiring resubmission will require the same quantity and distribution as an initial submittal.

6. Accompany submittals with submittal cover form attached to each copy of each submittal.

7. Initial Submittal of Installation, Operation, and Maintenance Manuals shall be 45 Days after the date Submittals that pertain to the applicable portion of the Installation, Operation, and Maintenance Manual is satisfactorily reviewed.

8 The following table lists the number of initial Submittals required from Contractor for each type of submission, to whom Contractor shall distribute the information, and City's distribution of reviewed submissions. If Contractor needs more copies of reviewed Submittals returned to it, then either submit additional copies or make copies from the returned transparency Submittal. Submittals requiring resubmission will require the same quantity and distribution as an initial Submittal.

| | **Contractor Initial Submittal** | | **City Submittal Review Return** | |
|---|---|---|---|---|
| SUBMITTAL | # of Original Transparencies | # of Copies/ Prints/ Samples | # of Original Transparencies | # of Copies/ Prints/ Samples |
| | City | City | Contractor | Contractor |
| Shop Drawings | 2 | 9 | 1 | 1 |
| Product Data | 0 | 9 | 0 | 1 |
| Samples | 0 | 4 | 0 | 1 |
| Materials Safety Data Sheets | 0 | 5 | 0 | 1 |
| Installation, Operation, and Maintenance Manuals | 1 | 5 | | 1 |
| Other Documents | 2 | 9 | 1 | 1 |

a. Accompany Submittals with Submittal transmittal form, in duplicate, containing:

i. Date, revision date, and Submittal log number.

ii. Project name and City's Contract number.

iii. Contractor's name, address, and job number.

iv. Specification Section number clearly identified.

v. The quantity of Shop Drawings, Product Data, or Samples submitted.

vi. Notification of deviations from Contract Documents.

vii. Materials Safety Data Sheet (MSDS) for each item complying with OSHA's Hazard Communication Standard 29 CFR 1910.1200.

viii. Other pertinent data.

b. Submittal shall include:

i. Date and revision dates.

ii. Revisions, if any, identified.

iii. Project Name and Contract number.

iv. The names of:

1) Contractor, Subcontractor, Supplier, Manufacturer, and separate detailer, when pertinent.

v. Identification of product material by location within the Project.

vi. Relation to adjacent structure or materials.

vii. Field dimensions, clearly identified as such.

viii. Specification Section number and applicable detail reference number on the Drawings.

ix. Applicable reference standards, such as ASTM, ANSI, FS, NEMA, SMACNA or ACI.

x. A blank space, on each Drawing or data sheet, 5" x 4" for the City's stamp.

xi. Identification of deviations from Contract Documents.

xii. Contractor's stamp, initialed or signed, with language certifying the review of Submittals, verification of field measurements, construction criteria and technical standards in compliance with Contract Documents.

R. Resubmission requirements:

1. Shop Drawings:

a. Revise initial Shop Drawings or package as required and re-submit.

b. Indicate on Shop Drawings any changes, which have been made other than those, requested by Engineer.

2. Product Data and Samples: Submit new Data and Samples as required for initial submittals.

3 Installation, Operation, and Maintenance Manuals:

a. Revise initial Installation, Operation, and Maintenance Manual(s) as required and resubmit as specified for initial Submittals.

4 Number of resubmissions:

a. One reexamination of Contractor's Submittals that have been returned for correction or replacement will be included in City's budget. Any additional reexamination of Contractor's Submittals will be considered additional scope services to be paid by Contractor through City. Contractor shall pay City (or City may deduct from any progress or final payment), for engineering personnel, on an hourly basis at 2.5 times direct payroll expenses, and for consultant personnel time at 1.25 times the amount billed City.

## 1.03 SCHEDULE OF SHOP DRAWING AND SAMPLE SUBMITTALS

A. Submit preliminary Schedule of Shop Drawing and Sample Submittals as required by Document 00700 General Conditions. Submit two **(2)** copies of final and accepted schedule of submittals of shop drawings and samples as required by Document 00700 General Conditions, and in no event later than ten (**10**) calendar days following Notice of Proceed.

B. Schedule of Shop Drawing and Sample Submittals will be used by City to schedule their activities relating to review of submittals. Schedule of submittals shall support the approved Initial Contract Schedule logic and indicate a spreading out of submittals and early submittals of long lead-time items and of items that require extensive review.

C. Schedule of Shop Drawing and Sample Submittals shall be reviewed by City and shall be revised and resubmitted until accepted by City.

D. Unless otherwise specified, make submittals in groups containing all associated items to assure that information is available for checking each item when it is received. Identify on the submittal which submittals should be reviewed together. The City may delay return of interrelated submittals when review is dependent on other submittals not yet received. The review period of such groups shall begin with the date of submission of the last member of the group and run for 21 calendar days.

## 1.04 SAFETY PROGRAM

A. Submit two (2) copies of Safety Program specific to these Contract Documents to City within the time set forth in Specification 1540, Paragraph 1.05.

## 1.05 PROGRESS SCHEDULE

A. Progress Schedule

1. See Section 01320 (Progress Schedules and Reports) for schedule and report requirements. Section 01320 shall control in any conflict with Section 01330.
2. Submit one (1) reproducible and three (3) print copies of schedule at each of the following times:
   - 1 Initial Progress Schedule at the Preconstruction Conference.
   - 2 Original Schedule within twenty (20) days of the Notice to Proceed date.
   - 3 Adjustments to the Schedule as required.
   - 4 Schedule updates monthly, seven (7) days prior to monthly progress meeting.
3. Submit four (4) copies of the reports listed in Section 01320 (Progress Schedules and Reports) with:
   - 1 Initial Schedule
   - 2 Original Schedule
   - 3 Each monthly Schedule update

4. Progress Schedules and Reports shall be submitted on CD-ROM, using software described in paragraph 1.4E of Section 01320, in addition to hard copies specified in this paragraph 0. Electronic files shall be complete copies, including all programs and electronic coding

1.06 PRODUCT DATA

A. Within twenty-one (**21**) calendar days after Start Date of the Contract Times submit two (2) copies of complete list of major products proposed for use, with name of manufacturer, telephone number, trade name, and model number of each product. Tabulate product data by specification section number.

B. For products specified only by reference standards, give manufacturer, trade name, model or catalog designation, and reference standards.

C. Product or Catalog Data:

1. Manufacturers standard drawings shall be modified to delete non-applicable data or include applicable data.

2. Manufacturers catalog sheets, brochures, diagrams, schedules, charts, illustrations and other standard descriptive data shall be:

a. Mark each copy to identify pertinent materials, products, or models.

b. Show dimensions and clearances required; performance characteristics and capacities, wiring diagrams and controls. Include applicable MSDS

D. Supplemental Data:

1. Submit number of copies that Contractor requires, plus two (2) copies that will be retained by City.

2. Mark each copy to identify applicable products, models, options, and other data. Supplement manufacturer's standard data, to provide information unique to Project.

3. Provide copies for Project Record Documents described in Section 01770 (Contract Closeout).

1.07 SHOP DRAWINGS

A. Minimum Sheet Size: 8-1/2 inches by 11 inches. All others: Multiples of 8-1/2 inches by 11 inches, 34 inches by 44 inches maximum.

B. For 8-1/2 inch by 11 inch and 11 inch by 17-inch sheets, see Paragraph 1.02Q in this Section for number of required copies.

C. For 17 inch by 22 inch through 34 inch by 44-inch sheets, see Paragraph 1.02Q in this Section for number of required copies.

D. Original sheet or reproducible transparency will be marked with City's review comments and returned to Contractor. See Paragraph 1.02Q in this Section for the number of copies returned to Contractor.

E. Mark each copy to identify applicable Products, models, options, and other data; supplement manufacturers' standard data to provide information unique to Work.

F. Include manufacturers' installation instructions when required by specification section.

G. Contractor shall not submit shop drawings for items that shop drawings are not specified.

H. Contractor shall be responsible for procuring copies of shop drawing for its own use as he may require for the progress of the work.

I. Shop drawings shall be drawn to scale and completely dimensioned, giving plan together with such sections as are necessary to clearly show construction detail and methods.

J. Shop drawings shall have Submittal cover attached to the front of each set.

1.08 SAMPLES

A. Submit full range of manufacturers' standard colors, textures, and patterns for City and/or Engineer's selection.

B. Submit samples to illustrate functional and aesthetic characteristics of Product, with integral parts and attachment devices. Coordinate submittal of different categories for interfacing work.

C. Include identification on each sample, giving full information.

D. Where no color is indicated in the drawings or specifications the Contractor shall submit manufacturer's standard physical color samples. Except for painted finishes, manufacturers color samples must be actual material samples. No printed or photographic color reproductions will be accepted.

E. The City Construction Manager may select up to 3 colors from specified sample ranges. The Contractor will then be required to submit larger scale samples to the City Construction Manager and install the submitted colors into the on-site Mock-Ups. For all interior finishes supply a minimum of 5 samples, one to be retained by the City on site and 4 to be sent to the City Construction Manager. Samples shall be as follows:

1. Paint – 8" x 10" samples painted on masonite in specified paint type and finish (with suitable prime coats installed).

2. Flat or sheet products: minimum of 12" x 12" square, maximum 24" x 24" square – unless larger area is required to show full pattern.

3. Linear products 12" minimum.

4. Bulk products: Minimum 1 pint, maximum 1 gallon.

F. Full size samples may be used in Work upon approval, unless otherwise noted.

G. Field Samples and Mock-ups (as applicable):

1. Erect field samples and mock-ups at Project site in accordance with requirements of Specification sections.

2. Modify or make additional field samples and mock-ups as required to provide appearance and finishes approved by Engineer and/or City.

3. Approved field samples and mock-ups may be used in Work upon approval, unless otherwise noted.

4. Construct or prepare as many additional Samples as may be required, as directed by the City Construction Manager, until desired textures, finishes, and/or colors are obtained.

5. Accepted Samples and mock-up shall serve as the standard of quality for the various units of work.

H. No review of a Sample shall be taken in itself to change or modify the requirements in the Contract Documents.

I. Finishes, materials, and workmanship in the completed building shall match accepted Samples.

1.09 QUALITY CONTROL SUBMITTALS

A. Design Data: N/A

B. Test Reports: Provide three (3) copies to the City for their records.

1. Indicate that material or product conforms to or exceeds specified requirements.

2. Reports may be from recent or previous tests on material or product, but must be acceptable to City. Comply with requirements of each individual Specification Section.

C. Certificates: Submit three (3) copies of certificates for the City's records.

1. Indicate that material or product conforms to or exceeds specified requirements.

2. Submit supporting reference data, affidavits, and certifications as appropriate.

3. Certificates may be recent or from previous test results on material or product, but must be acceptable to City.

D. Manufacturers' Instructions: Submit three (3) copies for the City's records.

1. Include manufacturer's printed instructions for delivery, storage, assembly, installation, startup, adjusting, and finishing.

2. Identify conflicts between manufacturer's instructions and Contract Documents.

E. Material Safety Data Sheets: Contractor shall provide City with three (3) copies of Material Safety Data Sheets (MSDS) for any paints, solvents, thinners, varnish, lacquer, glues and adhesives, mastics, or other materials needed for the Project as required by the individual sections of this Specification or as otherwise specified in the Contract Documents.

1. MSDS required for a submittal must be submitted with product date in order for the submittal to be reviewed

F. OPERATIONS AND MAINTENANCE MANUALS

1. Installation, Operations, and Maintenance Manuals
2. Sheet Size: 8½ x 11 inch
3. Submit two (2) copies
4. Drawing Size: Reduce drawings or diagrams to an 8½ x 11 inch or 11 x 17 inch size. However, where reduction is not practical to ensure readability, fold larger drawings separately and place in vinyl envelopes bound into the binder. Identify vinyl envelopes with drawing numbers.
5. Binding: Bind in stiff, metal-hinged, three-ring binder(s) with standard three-hole punching.
6. Multiple Items: Multiple items may be combined into one binder; tab each section with plastic-coated dividers.
7. Page Protectors: Provide plastic sheet lifters prior to first page and following last page.
8. Binder title: Include the following title on front and spine of binder:

**PALM SUBSTATION 60kV EXTENSION PROJECT**

INSTALLATION, OPERATION, AND MAINTENANCE MANUAL, 200_

G Contents:

a. Introductory Information:

i. Title page providing the same information as paragraph 0 above

ii. Contractor's name, address, and telephone number

iii. Table of Contents

b. Include, at a minimum, the following detailed information for each item as applicable and as required by individual Specification Sections:

i. Equipment function, normal operating characteristics, limiting operations.

ii. Assembly, disassembly, installation, alignment, adjustment, and checking instructions.

iii. Operating instructions for startup, routine and normal operation, regulation and control, shutdown, and emergency conditions.

iv. Lubrication and maintenance instructions including specific type and amount of lubricant and recommended lubrication interval.

v. Guide to "troubleshooting."

vi. Parts list and predicted life of parts subject to wear.

vii. Outline, cross-section, and assembly drawings; engineering data; and electrical diagrams, including elementary diagrams, labeled wiring diagrams, connection diagrams, word description of wiring diagrams and interconnection diagrams.

viii. Test data and performance curves.

ix. A list of recommended spare parts with a price list and a list of spare parts provided under this Contract.

x. Copies of parts lists or other documents packed with equipment when delivered.

xi. Instrumentation or tag numbers relating the equipment back to the Contract Documents.

xii. Preventive maintenance instructions

xiii. Cleaning instructions

xiv. Safety precautions

xv. Trouble shooting procedures

xvi. Theory of operation to discrete component level

xvii. Schematic diagrams, flow diagrams, wiring diagrams, logic diagrams, etc., to discrete component level.

xviii. Parts lists showing all discrete components with part number, current prices and availability

xviv. List of replaceable supplies; paper, ink, ribbon, etc., with part numbers, current prices and availability.

xx. Recommended levels of spare parts and supplies to keep on hand

xxi. Manufacturers' service and maintenance technical manuals

xxii. Names, addresses and telephone numbers of service and repair firms for the equipment

c. Index

H. Final Submittal: Upon favorable review of Installation, Operation, and Maintenance Manual(s) by City, deliver nine additional hard copies and one electronic media format copy of the final approved Installation, Operation, and Maintenance Manual(s). Electronic media format copy shall include all tables, charts, drawings, codes and all other matters reflected in hard copies. The City utilizes [_____] for records-keeping and facilitating maintenance functions.

I. Electronic Media Format: Compatible with Microsoft® Word 2000 for Windows, AutoCAD 2005 for Windows in drawing format (.DWG), or Adobe (.PDF) unless directed otherwise by City. All files shall be delivered on a unique CD-ROM.

J. Draft Submittal: The Draft Submittal of Installation, Operation, and Maintenance Manuals shall be submitted to City prior to equipment startup.

K. Operations and maintenance manuals shall include the following as appropriate:

1. Equipment function, normal operating characteristics, limiting operations.
2. Assembly, disassembly, installation, alignment, adjustment, and checking instructions.
3. Operating instructions for startup, routine and normal operation, regulation and control, shutdown, and emergency conditions.
4. Lubrication and maintenance instructions including specific type and amount of lubricant and recommended lubrication interval.
5. Guide to "troubleshooting."
6. Parts list and predicted life of parts subject to wear.
7. Outline, cross-section, and assembly drawings; engineering data; and electrical diagrams, including elementary diagrams, labeled wiring diagrams, connection diagrams, word description of wiring diagrams and interconnection diagrams.
8. Test data and performance curves.
9. A list of recommended spare parts with a price list and a list of spare parts provided under this Contract.
10. Copies of parts lists or other documents packed with equipment when delivered.
11. Instrumentation or tag numbers relating the equipment back to the Contract Documents.

L. Manuals shall be the same as are used by manufacturers' authorized technicians to completely service and repair the equipment.

## 1.10 COMPUTER PROGRAMS

When any equipment requires operation by computer programs, submit copy of program on appropriate diskette, plus a hard-copy and an electronic copy (Adobe .PDF format) of all user manuals and guides for operating the programs and making changes in the programs for upgrading and expanding the databases. Program shall be Windows 2000 compatible. Provide required licenses to City at no additional cost.

## 1.11 PROJECT RECORD DOCUMENTS

Submit one (1) copy of each of the Project Record Documents listed in Section 01770 Contract Closeout.

1.12 DELAY OF SUBMITTALS

Delay of submittals by Contractor is considered avoidable delay. Liquidated damages incurred because of late submittals will be assessed to Contractor.

1.13 Optional review meeting

a. At the Contractor's request, in order to facilitate the timeliness of the review process, the City may schedule a meeting to review the materials submitted. If this option is exercised, the following requirements apply:

b. Request a meeting date with the City at least ten (10) Business Days in advance.

c. Provide the complete package of Submittal information at least five (5) Business Days in advance of the meeting.

d. The meeting shall take place at City's office. City will provide the authorized staff to review and respond on the Submittal information during the meeting.

e. Make available for this meeting the job superintendent and/or foreman, Contractor's safety officer, and someone knowledgeable of all the items submitted and authorized to make substitutions or changes.

PART 2 PRODUCTS

Not applicable to this section.

PART 3 EXECUTION

Not applicable to this section.

**END OF SECTION**

TRANSMITTAL SHEETS FOLLOW THIS PAGE

**EXHIBIT A**

**SUBMITTAL TRANSMITTAL NO. _____**

| | | | |
|---|---|---|---|
| Project Name: **PALM SUBSTATION 60kV EXTENSION PROJECT** | | Date Received: | |
| City of Santa Clara, a Municipal Corporation<br>of the State of California<br>1500 Warburton Avenue<br>Santa Clara, CA 95050 | | Checked By: | |
| Contractor: | | Log Page: | |
| Address: | Address: | | |
| | | Specification Section Number: | |
| Attention: | Attention: | 1st Submittal ☐ | Resubmittal ☐ |
| Date Transmitted: | Previous Transmittal Date: | | |

| No. Copies | Description | Manufacturer | Dwg. or Data No. | Action Taken* |
|---|---|---|---|---|
| | | | | |
| | | | | |
| | | | | |
| | | | | |
| | | | | |
| | | | | |

Remarks _____

_____

_____

* The action designated above is in accordance with the following legend:

A – No Exceptions Taken

B – Make Corrections Noted (No Resubmission Required)

C. – Make Corrections Noted and Resubmit

D – City's review not required

1. Submittal not required
2. Supplemental information. Submittal retained for informational purposed only

D – Not Approved

1. Not enough information for review
2. No reproducibles submitted
3. Copies illegible
4. Not enough copies submitted
5. Wrong sequence number
6. Wrong resubmittal number
7. Wrong Specification section number
8. Wrong form used
9. See comments
10.

3. Information reviewed and approved on prior Submittal
4. See comments

Comments: _____

_____

_____

_____

By Date

Distribution: Contractor ☐ File ☐ Field ☐ City ☐ Other ☐

**EXHIBIT B**

**INSTALLATION, OPERATION, AND MAINTENANCE MANUAL TRANSMITTAL NO. _____**

| | | | | |
|---|---|---|---|---|
| Project Name: **PALM SUBSTATION 60kV EXTENSION PROJECT** | | | Date Received: | |
| City of Santa Clara, a Municipal Corporation<br>of the State of California<br>1500 Warburton Avenue<br>Santa Clara, CA 95050 | | | Checked By: | |
| Contractor: | | | Log Page: | |
| Address: | Address: | | | |
| | | | Specification Section Number: | |
| Attention: | Attention: | | 1st Submittal ☐ | Resubmittal ☐ |
| Date Transmitted: | Previous Transmittal Date: | | | |

| No. Copies | Description | Manufacturer | Dwg. or Data No. | Action Taken* |
|---|---|---|---|---|
| | | | | |
| | | | | |
| | | | | |
| | | | | |
| | | | | |
| | | | | |
| | | | | |

Remarks

* The action designated above is in accordance with the following legend:]

A – No exceptions taken

B – Make Corrections Noted (No Resubmission Required)

C. – Make Corrections Noted and Resubmit

C – (continued)

5. Lubrication and maintenance instructions
6. Troubleshooting guide
7. Parts list and ordering instructions

D – Not Approved– this manual Submittal is deficient in the following area:

1. Equipment record sheets
2. Functional description
3. Assembly, disassembly, installation, alignment, adjustment, and checkout instructions
4. Operating instructions
8. Organization (indexing and tabbing)
9. Wiring diagrams and schematics specific to installation
10. Outline, cross section, and assembly diagrams
11. Test data and performance curves
12. Tag or equipment identification numbers
13. See comments

Comments: _____

_____

_____

_____

By Date

Distribution: Contractor ☐ File ☐ Field ☐ City ☐ Other ☐

THIS PAGE

INTENTIONALLY

LEFT BLANK

# DOCUMENT 01350
# SPECIAL PROCEDURES

## PART 1 GENERAL

### 1.1 SUMMARY

A. Section Includes:

1. Cultural resources.
2. Hazardous materials/waste.
3. Tree protection.

### 1.2 DEFINITIONS (N/A)

### 1.3 SUBMITTALS

A. See Section 01330 (Submittal Procedures).

B. Name and address of the selected treatment, recycling, or disposal facilities for contaminated soil disposal.

C. Non-hazardous waste manifests.

D. Facility weight tickets.

### 1.4 CULTURAL RESOURCES

A. If cultural resources are encountered during construction of the Project, Contractor shall avoid any further disturbance of the materials and immediately discontinue earthwork within 100 feet of the find. Contractor shall notify City immediately upon encountering cultural resources. Contractor shall be prepared to move on to another location or phase of work, allowing sufficient time for City to evaluate the nature and significance of the find, and implement appropriate management procedures.

B. In the event that prehistoric human remains are encountered, ground-disturbing activities at that location shall cease immediately. Contractor shall notify City immediately upon encountering human remains. Contractor shall be prepared to move on to another location or phase of Work to allow the City to notify the proper authorities and assess management of the situation.

C. Contractor shall not be entitled to any increase in Contract Sum due to conditions described in this paragraph 1.4 of this Section 01350. City may, if it believes appropriate in its sole discretion, grant an extension of Contract Time.

### 1.5 HAZARDOUS MATERIALS/WASTE

A. Comply with Sections 5163 through 5167 of the *General Industry Safety Orders (California Code of Regulations, Title 8)* to protect the Site from being contaminated by the accidental release of any hazardous materials and/or waste.

B. If Contractor encounters subsurface contamination, the following provisions and precautionary measures shall be implemented during construction:

1. Contractor's personnel shall be alert for and immediately report to City any detectable chemical odors, unusual debris, or discolored soil.

2. Should the discovery of contaminants cause delay to Contractor's operations, extension of Contract Time will be granted by City in accordance with Document 00700 (General Conditions). Contractor will not be entitled to damages or additional payment due to such delay.

3. If hazardous materials are encountered, they shall be handled in accordance with applicable local, state, and federal regulations which may include: (1) CCR Title 8, Division 4, Chapter 4, Section 5192 (Hazardous Waste Operations and Emergency Response); (2) CCR, Title 22, Division 4.5, Chapters 10 through 13 and 18 (Environmental Health Standards for Management of Hazardous Waste); and (3) CCR Title 23, Division 3, Chapter 15 (Discharges of Waste to Land).

C. Disposal requirements: Soils containing hazardous materials shall be disposed by Contractor at permitted treatment, recycling, or disposal facilities in accordance with CCR Title 23, Division 3, Chapter 15 (Discharges of Waste to Land). Determine to which permitted treatment, recycling, or disposal facilities the soil will be delivered.

D. Fees: Pay for any fees associated with the treatment, recycling, or disposal of these soils. Any additional soil sampling and chemical analyses required for acceptance of the soil at facilities other than those described above shall be the responsibility of Contractor.

E. Transport: Transport the soils to the selected facilities under approved manifests and submit copies of these manifests and the facility weight tickets to City.

F. Dewatering: Construct, operate and maintain as required to complete the Work all necessary cofferdams, channels, pipes, flumes, drains, sumps, well points and protective works; and furnish, install, operate and maintain all necessary pumping and other equipment for dewatering the areas of Work suspected of containing hazardous materials; and control all surface flow and groundwater as may be encountered while performing the Work. Remove all water that may accumulate in the excavation while the Work progresses so that all Work can be performed in dry conditions. All contaminated water shall be removed from the excavation before it is backfilled. The excavation shall be kept free from water until backfilling has progressed to a height above the water source.

G. Storage tank: Provide a minimum 2,500-gallon double-walled water storage tank on Site for the duration of the Work. If more storage capacity is needed, provide additional storage tanks on Site.

H. Water sampling and chemical analysis: Water samples shall be collected from the holding tanks and submitted to a State-Certified chemical analysis laboratory. Chemical analyses required for the samples shall at a minimum include: TPHg following EPA Test Methods 5030/8015 (modified); benzene, toluene, ethylbenzene, and total xylenes (BTEX) following EPA Test Method 8020; and chlorinated solvents following EPA Test Method 8010. Perform additional chemical analyses that may be required for disposal or recycling of the water. Laboratory chemical analysis reports associated with the water samples shall be provided to City.

Removal of dewatering equipment: After having served their purpose, all protective works, including the temporary water storage tank(s) and dewatering pumps, shall be decontaminated and removed from the Site. Contractor is responsible for permanent disposal of all equipment that cannot be decontaminated or recycled in accordance with all applicable laws and regulations.

**PART 2 PRODUCTS - NOT USED**

**PART 3 EXECUTION - NOT USED**

END OF SECTION

THIS PAGE

INTENTIONALLY

LEFT BLANK

# DOCUMENT 01410

# REGULATORY REQUIREMENTS

## PART 1 GENERAL

### 1.01 SUMMARY

This section includes regulatory requirements applicable to Contract Documents.

Specific reference in the specifications to codes and regulations or requirements of regulatory agencies shall mean the latest printed edition of each adopted by the regulatory agency at the date of submission of bids unless the document referenced is shown dated.

Should any conditions develop not covered by the Contract Documents wherein the finished work will not comply with current codes, a change order detailing and specifying the required work shall be submitted to and approved by the Engineer before proceeding with the Work.

### 1.02 REFERENCES TO REGULATORY REQUIREMENTS

A. Codes, laws, ordinances, rules and regulations referred to shall have full force and effect as though printed in full in these specifications. Code, laws, ordinances, rules and regulations are not furnished to Contractor, because Contractor is assumed to be familiar with their requirements. The listing of applicable codes, laws and regulations for hazardous waste abatement work in this Section 01410 is supplied to Contractor as a courtesy and shall not limit Contractor's responsibility for complying with all applicable laws, regulations or ordinances having application to the Work. Where conflict among the requirements or with these specifications, the most stringent requirements shall be used.

B. Conform to referenced codes, laws, ordinances, rules and regulations.

C. Precedence:

1. Where specified requirements differ from the requirements of applicable codes, ordinances and standards, the more stringent requirements shall take precedence.

2. Where Plans or Specifications require or describe products or execution of better quality, higher standard or greater size than required by applicable codes, ordinances and standards, Plans and Specifications shall take precedence so long as such increase is legal.

3. Where no requirements are identified on Plans or in Specifications, comply with all requirements of applicable codes, ordinances and standards of governing authorities having jurisdiction.

## 1.03 CODES

Codes that apply to Contract Documents include, but are not limited to, the following:

A. Cal. Building Code (Part 2, Title 24, C.C.R., including, without means of limitation, sections 16A, 102A.23, 308, 420A, 504-506, 904.2.6, 1019 and 1604)
B. Cal. Electrical Code (Part 3, Title 24, C.C.R.)
C. Cal. Mechanical Code (Part 4, Title 24, C.C.R.)
D. Cal. Plumbing Code (Part 5, Title 24, C.C.R),
E. State Elevator Safety Regulations (Part 7, Title 24, C.C.R.)
F. UBC
G. UPC
H. UMC
I. NEC

## 1.04 LAWS, ORDINANCES, RULES AND REGULATIONS

A. During prosecution of Work to be done under Contract Documents, comply with applicable laws, ordinances, rules and regulations, including, but not limited to, the following:

B. Federal

1. Americans With Disabilities Act of 1990 CADAI

2. 29 CFR, Section 1910.1001, Asbestos

3. 40 CFR, Subpart M, National Emission Standards for Asbestos

4. Executive Order 11246

5. Federal Endangered Species Act

6. Clean Water Act

C. State of California

1. California Code of Regulations, Titles 5, 8, 19, 21, 22, 24 and 25

2. California Public Contract Code

3. California Health and Safety Code

4. California Government Code

5. California Labor Code

6. California Civil Code

7. California Code of Civil Procedure

8 CPUC General Order 95, Rules for Overhead Electric Line Construction.

9. CPUC General Order 128, Rules for Construction of Underground Electric Supply and Communications Systems

10. California Occupational Safety and Health Administration (Cal OSHA)

11. Occupational Safety and Health Administration (OSHA): Hazard Communications Standards.

12. California Endangered Species Act

13. Water Code

14. Fish and Game Code

D. State of California Agencies

1. State and Consumer Services Agency

2. Office of the State Fire Marshall

3. Office of Statewide Health Planning and Development

4. California Regional Quality Control Board, San Francisco Bay Region.

   a) Contractor shall oversee site compliance with the Storm Water Pollution Prevention Plan attached to the end of this section.

5. San Francisco Bay Regional Water Quality Control Board

E. Local Agencies:

1. Bay Area Air Quality Management District

2. City of Santa Clara

3. County of Santa Clara

4. Santa Clara County Water District

5. Peninsula Corridor Joint Powers Board/CalTrain/Amtrack

F. Other Requirements:

1. National Fire Protection Association (NFPA): Pamphlet 101, Life Safety.

2. References on Plans or in Specifications to "code" or "building code" not otherwise identified shall mean the codes specified above, together with all additions, amendments, changes, and interpretations adopted by code authorities of the jurisdiction.

G. Maintain a copy of each of the above documents in Contractor's field office. The City's Construction Management staff shall have access to these documents for their reference.

H. Other Applicable Laws, Ordinances and Regulations:

1. Work shall be accomplished in conformance with all applicable laws, ordinances, rules and regulations of Federal, State and local governmental agencies and jurisdictions having authority over the Project.

2. Work shall be accomplished in conformance with all rules and regulations of public utilities and utility districts.

3. Where such laws, ordinances rules and regulations require more care or greater time to accomplish Work, or require better quality, higher standards or greater size of products, Work shall be accomplished in conformance to such requirements with no change to the Contract Time and Contract Sum, except where changes in laws, ordinances, rules and regulations occur subsequent to the execution date of the Agreement.

I. Under California Government Code Section 930.2 et. seq. and Public Contract Code Section 7105(d)(2), neither the Contract Claims Procedure (Document 00700, Article 12) nor the Change Order Procedure (Section 01250) may be modified, waived, or otherwise not complied with, absent a written change order that explicitly and expressly makes such modifications.

1.05 CONFLICTS

A. Between referenced regulatory requirements: Comply with the one establishing the more stringent requirement.

B. Between referenced regulatory requirements and Contract Documents: Comply with the one establishing the more stringent requirement.

1.06 REQUIRED PROVISIONS ON CONTRACT CLAIM RESOLUTION

A. The California Public Contracts Code specifies required provisions on resolving contract claims less than $375,000, which are set forth below, and constitute a part of this Contract.

For the purposes of this section, "CLAIM" means a separate demand by Contractor of $375,000 or less for (1) a time extension, (2) payment or money or damages arising from work done by or on behalf of Contractor arising under the Contract Documents and payment of which is not otherwise expressly provided for or the claimant is not otherwise entitled to, or (c) an amount the payment of which is disputed by City. In order to qualify as a CLAIM, the written demand must state that it is a claim submitted under Paragraph 12 of Document 00700 General Conditions and be submitted in compliance with all requirements of Paragraph 12 of Document 00700 General Conditions. Separate claims which total more than $375,000 do not qualify as a "separate demand of $375,000 or less", as referenced above, and are not subject to this section.

A voucher, invoice, payment application, or other routine or authorized form of request for payment is not a claim under the Contract. If such request is disputed as to liability or amount, then the disputed portion of the submission may be converted to a claim under the Contract by submitting a separate claim in compliance with Contract Documents claim submission requirements.

**CAUTION:** This section does not apply to tort claims and nothing in this section is intended nor shall be construed to change the time periods for filing tort claims or actions specified by Chapter 1 and Chapter 2 of Part 3 of Division 3.6 of Title 1 of the California Government Code.

B. PROCEDURE

1. The CLAIM must be in writing, submitted in compliance with all requirements of Paragraph 12 of Document 00700 General Conditions, including, but not limited to, the time prescribed by and including the documents necessary to substantiate the CLAIM, pursuant to Paragraph 12.C of Document 00700 General Conditions. CLAIMS must be filed on or before the day of final payment. Nothing in this section is intended to extend the time limit or supersede notice requirements for the filing of claims as set forth in Paragraph 12 of Document 00700 General Conditions or elsewhere in the Contract Documents.

2. For CLAIMS of fifty thousand dollars ($50,000) or less

    a. City shall respond in writing within 45 days of receipt of the CLAIM, or

    b. City may request in writing within 30 days of receipt of the CLAIM, any additional documentation supporting the CLAIM or relating to any defenses or claims City may have against Claimant.

        1) If additional information is thereafter required, it shall be requested and provided in accordance with this section, upon mutual agreement of City and Claimant.

2) City's written response to the CLAIM, as further documented, shall be submitted to Claimant within 15 days after receipt of further documentation or within a period of time no greater than taken by Claimant in producing the additional information, whichever is greater.

3. For CLAIMS over Fifty Thousand Dollars ($50,000) and less than or equal to $375,000:

   a. City shall respond in writing within 60 days of receipt of the CLAIM, or

   b. City may request in writing within 30 days of receipt of the CLAIM, any additional documentation supporting the CLAIM or relating to any defenses or claims City may have against Claimant.

      1) If additional information is thereafter required, it shall be requested and provided in accordance with this section, upon mutual agreement of County and Claimant;

      2) City written response to the CLAIM, as further documented, shall be submitted to Claimant within 30 days after receipt of further documentation or within a period of time no greater than taken by Claimant in producing the additional information, whichever is greater.

4. Meet and Confer

   a. If Claimant disputes City written response, or City fails to respond within the time prescribed above, Claimant shall notify City, in writing, either 15 days of receipt of City response or within 15 days of City failure to timely respond, and demand an informal conference to meet and confer for settlement of the issues in dispute. Upon demand City will schedule a meet and confer conference within 30 days for settlement of the dispute.

   b. Following the meet and confer conference, if the CLAIM or any portion remains in dispute, Claimant may file a claim as provided in Chapter 1 (commencing with Section 900) and Chapter 2 (commencing with Section 910) of Part 3 of Division 3.6 of Title 1 of the California Government Code. For purposes of those provisions, the running of the period of time within which a claim must be filed shall be tolled from the time Claimant submits his or her written claim as set forth at Paragraph 12.B.2 of Document 00700 General Conditions, until the time that CLAIM is denied as a result of the meet and confer process, including any period of time utilized by the meet and confer process.

1.07 COMPLIANCE WITH AMERICANS WITH DISABILITIES ACT

Contractor acknowledges that, pursuant to the Americans with Disabilities Act (ADA), programs, services and other activities provided by a public entity to the public, whether directly or through a contractor, must be accessible to the disabled public. Contractor shall provide the services specified in this Agreement in a manner that complies with the ADA and any and all other applicable federal, state and local disability rights legislation. Contractor agrees not to discriminate against disabled persons in the provision of services, benefits or activities provided under this Agreement and further agrees that any violation of this prohibition on the part of Contractor, its employees, agents or assigns shall constitute a material breach of this Agreement.

PART 2 PRODUCTS

Not applicable to this section.

PART 3 EXECUTION

Not applicable to this section.

**END OF SECTION**

THIS PAGE

INTENTIONALLY

LEFT BLANK

# DOCUMENT 01411

# REGULATORY REQUIREMENTS FOR HAZARDOUS MATERIALS

## PART 1 GENERAL

### 1.01 SUMMARY

A. This section includes regulatory requirements applicable to Work in connection with hazardous waste abatement and disposal, including, but not limited to, asbestos and asbestos containing materials, lead based paint, polychlorinated biphenyls, petroleum contaminated soils and materials, construction and demolition debris and any other hazardous substance or hazardous waste.

B. This section supplements Section 01410 Regulatory Requirements and the work specific listings of applicable regulatory requirements elsewhere in the specifications.

C. Related Sections.

1. Section 01410: Regulatory Requirements.

### 1.02 REFERENCES TO REGULATORY REQUIREMENTS

A. Codes, laws, ordinances, rules and regulations applicable to the Work shall have full force and effect as though printed in full in Contract Documents. Codes, laws, ordinances, rules and regulations are not furnished to Contractor because Contractor is assumed to be familiar with their requirements. The listing herein of applicable codes, laws and regulations for hazardous waste abatement work is supplied to Contractor as a courtesy and shall not limit Contractor's responsibility for complying with all applicable laws, regulations or ordinances having application to the Work. Where conflict among the requirements or with these specifications exists, the most stringent requirements shall be used.

B. Contractor's work shall conform to all applicable codes, laws, ordinances, rules and regulations that are in effect on date of contracting.

### 1.03 LAWS, ORDINANCES, RULES AND REGULATIONS

A. During prosecution of Work under Contract Documents, Contractor shall comply with applicable laws, ordinances, rules and regulations, including, but not limited to, those listed below.

B. Federal:

1. Statutory Requirements:

a. Resource Conservation and Recovery Act, 42 U.S.C. §§ 6901 *et seq.*
b. Comprehensive Environmental Response, Compensation and Liability Act of 1980, as amended by the Superfund Amendments and Reauthorization Act of 1986, 42 U.S.C. §§ 9601 *et seq.*

c. Toxic Substances Control Act of 1976, 15 U.S.C. §§ 2601 *et seq.*
d. Hazardous Materials Transportation Act of 1975, 49 U.S.C. §§ 1801 *et seq.*
e. Clean Water Act, 33 U.S.C. §§ 1251 *et seq.*
f. Safe Drinking Water Act, 42 U.S.C. §§3001 *et seq.*
g. Clean Air Act, section 112, 42 U.S.C. §7412
h. Occupational Safety and Health Act of 1970, 29 U.S.C. §§ 651 *et seq.*
i. Underground Storage Tank Law, 42 U.S.C. §§6991 *et seq.*
j. The Emergency Planning and Community Right to Know Act of 1986, 42 U.S.C. §§ 11001 *et seq.*

2. Environmental Protection Agency (EPA):

a. 40 C.F.R. Parts 260, 264, 265, 268, 270
b. 40 C.F.R. Parts 258 *et seq.*
c. 40 C.F.R. Part 761
d. 40 C.F.R. Parts 122-124

3. Occupational Safety and Health Administration (OSHA):

a. OSHA Worker Protection Standards, Title 29 CFR Part 1926.58, Construction Standards and 29 CFR 1910.1001 General Industry Standard
b. OSHA, 29 C.F.R. Part 1926.1101, Construction Standards for Asbestos
c. OSHA, Lead Exposure in Construction: Interim Final Rule, 29 C.F.R. 1926.62
d. National Emission Standard for Hazardous Air Pollutants, Title 40 CFR Part 61
e. Asbestos Hazardous Emergency Response Act, Title 40 C.F.R. 763

4. Department of Transportation:

a. Title 49 C.F.R. 173.1090
b. Title 49 C.F.R. 172
c. Title 49 C.F.R. 173
d. DOT, HM 181 and MH126f

C. State of California Requirements:

1. Statutory Law:

a. The Carpenter-Presley-Tanner Hazardous Substance Account Act, Health & Safety Code §§25300 *et seq.*
b. Health and Safety Code § 25359.4
c. Hazardous Waste Control Law, Health & Safety Code §§25100 *et seq.*
d. Porter Cologne Water Quality Control Act, Water Code §§13000 *et seq.*
e. Health and Safety Code §§25915-25924
f. Cal. Labor Code Chapter 6, including, without limitation, §§ 6382, 6501.5-6501.9, 6503.5, 9021.5, 9080
g. Business and Professions Code, including without limitation, §§7058.5, 7065.01, 7118.5.
h. Underground Storage of Hazardous Substance Act, Health & Safety Code §§25280 *et seq.*
i. Petroleum Underground Storage Tank Cleanup, Health and Safety Code §§25299.10 *et seq.*

j. Safe Drinking Water and Toxic Enforcement Act of 1986, Health & Safety Code §§25249.5 *et seq.* (Proposition 65)
k. Above Ground Petroleum Storage Act, Health and Safety Code §§ 25270 *et seq.*
l. Hazardous Materials Release Response Plans and Inventory, Health and Safety Code Chapter 6.95.

2. Administrative Code and Regulations:

a. Title 22 C.C.R. Division 4.5, Environmental Health Standards for the Management of Hazardous Waste § 6600 *et seq.*
b. Cal OSHA Worker Protection Standards, Title 8 C.C.R. §§1529, 5208
c. Title 8 C.C.R. §1532.1, Lead in Construction
d. Title 23 C.C.R. §2610 *et seq.*

3. Other Agency Requirements:

a. Bay Area Air Quality Management District, Fugitive Dust Rules
b. Bay Area Air Quality Management District Regulation 11-2-303
c. State Water Resource Control Board, General Construction Activity Stormwater Permit Requirements (Order 92-OS DWQ)

D. Local Agency Requirements:

1. City of Santa Clara Fire Department
2. City of Santa Clara Ordinances
3. County of Santa Clara Ordinances

E. See document 00700

1.04 PERMITS

A. Contractor shall comply with, implement and acknowledge effectiveness of all the permits applicable to Work, and initiate and cooperate in securing all required notifications or approvals therefore, including but not limited to permits affecting environmental work.

PART 2 PRODUCTS

Not applicable to this section.

PART 3 EXECUTION

Not applicable to this section.

**END OF SECTION**

THIS PAGE

INTENTIONALLY

LEFT BLANK

# DOCUMENT 01420

# REFERENCES AND DEFINITIONS

PART 1 GENERAL

1.01 SUMMARY

A. This section includes reference standards, abbreviations, symbols and definitions used in Contract Documents.

B. Full titles and edition dates are given in this section for standards cited in other sections of Specifications.

C. Material and workmanship specified by reference to number, symbol, or title of specific standard such as state standard, commercial standard, federal specifications, technical society, or trade association standard, or other similar standard shall comply with requirements of standards except when more rigid requirements are specified or required by applicable codes.

D. Standards referred to, except as modified herein, shall have full force and effect as though printed in the Contract Documents. Standards are not furnished to Contractor, because manufacturers and trades involved are assumed to be familiar with their requirements.

1.02 REFERENCE TO STANDARDS AND SPECIFICATIONS OF TECHNICAL SOCIETIES; REPORTING AND RESOLVING DISCREPANCIES:

A. Reference to standards, specifications, manuals or codes of any technical society, organization or association, or to the laws or regulations of any governmental authority, whether such reference be specific or by implication, shall mean the latest standard, specification, manual, code or laws or regulations in effect at the time of opening of Bids, except as may be otherwise specifically stated in the Contract Documents.

B. If during the performance of the Work, Contractor discovers any conflict, error, ambiguity or discrepancy within the Contract Documents or between the Contract Documents and any provision of any such law or regulation applicable to the performance of the Work or of any such standard, specification, manual or code or of any instruction of any supplier, Contractor shall report it in writing at once by submitting a Request for Information to City, with a copy to Architect, and Contractor shall not proceed with the Work affected thereby until consent to do so is given by City.

C. Except as otherwise specifically stated in the Contract Documents or as may be provided by Change Order, Construction Change Directive, Field Instruction or supplemental instruction, the provisions of the Contract Documents shall take precedence in resolving any conflict, error, ambiguity or discrepancy between the provisions of the Contract Documents and:

1. The provisions of any such standard, specification, manual, code, or instruction (whether or not specifically incorporated by reference in the Contract Documents); or

2. The provisions of any such laws or regulations applicable to the performance of the Work (unless such an interpretation of the provisions of the Contract Documents would result in violation of such law or regulation).

   No provision of any such standard, specification, manual, code or instruction shall be effective to change the duties and responsibilities of City, Contractor, or Engineer, or any of their subcontractors, consultants, agents, or employees, from those set forth in the Contract Documents, nor shall it be effective to assign to City, Engineer, or any of their consultants, agents or employees any duty or authority to supervise or direct the furnishing or performance of the Work or any duty or authority to undertake responsibility inconsistent with the provisions of the Contract Documents.

D. Contractor shall comply with the applicable portions of standards and specifications published by the technical societies, institutions, associates and governmental agencies referred to in Specifications.

   1. Comply with referenced standards and specifications; latest revision in effect at the time the Agreement is executed, unless otherwise identified by date.

      a. Exception: Comply with issues in effect as listed in governing legal requirements.

E. Referenced Grades Classes and Types: Where an alternative or optional grade, class or type of product or execution is included in a reference but is not identified in Plans or in Specifications, provide the highest, best and greatest of the alternatives or options for the intended use and prevailing conditions.

F. Jobsite Copies:

   1. Contractor shall obtain and maintain at the Site copies of reference standards identified on Plans and in Specifications in order to properly execute the Work. The City's Construction Management staff shall have access to these reference standards for their use at the Site.

   2. At a minimum, the following shall be readily available at the site:

      a. Model Codes: Uniform Building Code (UBC), Uniform Fire Code (UFC), Uniform Mechanical Code (UMC), Uniform Plumbing Code (UPC), NFPA 70-National Electric Code (NEC) and NFPA 101-Life Safety Code, including applicable amendments for jurisdiction in which Project is located.

      b. State Codes: California Code of Regulations, Division of Industrial Safety regulations.

      c. Safety Codes: State of California, Division of Industrial Safety regulations.

d. General Standards: UBC Standards, other model code standards, UL Building Products Listing, FM Approval Guide and ASTM Standards in Building Codes.

e. Fire and Life Safety Standards: All referenced standards pertaining to fire rated construction and exiting.

f. Common Materials Standards: American Concrete Institute (ACI), American Institute of Steel Construction (AISC), American Welding Society (AWS), Gypsum Association (GA), National Fire Protection Association (NFPA), Tile Council of America (TCA) and Woodwork Institute of California (WIC) standards to the extent referenced within the Specifications.

g. Research Reports: ICBO Research Reports and CABO National Evaluation Service Reports (NER) for all products used.

G. Edition Date of References:

1. When an edition or effective date of a reference is not given, it shall be understood to be the current edition or latest revision published as of the date of the Agreement.

2. All amendments, changes, errata and supplements as of the effective date shall be included.

H. ASTM and ANSI References: Specifications and Standards of the American Society for Testing and Materials (ASTM) and the American National Standards Institute (ANSI) are identified in the Drawings and Specifications by abbreviation and number only and may not be further identified by title, date, revision or amendment. It is presumed that Contractor is familiar with and has access to these nationally-and industry-recognized specifications and standards.

1.03 STANDARDS

A. ACI (American Concrete Institute)

Standard 318, Building Code Requirements for Reinforced Concrete

B. AISC (American Institute of Steel Construction

Specifications and Code of Standard Practice for Steel Buildings and Bridges

C. ANSI (American National Standards Institute, formerly American Standards Association)

Standard C2, NESC (National Electrical Safety Code)

D. ASTM (American Society for Testing and Materials)

1. C31, Making and Curing Concrete Test Specimens in the Field
2. C42, Obtaining and Testing Drilled Cores and Sawed Beams of Concrete
3. C143, Test Method for Slump of Portland Cement Concrete

E. IAPMO (International Association of Plumbing and Mechanical Officials)

1. UMC (Uniform Mechanical Code)
2. UPC (Uniform Plumbing Code)

The minimum building standards applicable to public schools are set forth in Parts 4 (California Mechanical Code) and 5 (California Plumbing Code)

F. ICBO (International Conference of Building Officials)

1. UBC (Uniform Building Code)
   The minimum building standards applicable to public schools are set forth in Parts 2 (California Building Code), 3 (California Electrical Code), 4 (California Mechanical Code), 5 (California Plumbing Code) and 7 (State Elevator Safety Regulations)
2. UBC Standard 26-8, Welding Reinforcing Steel, Sheet Metal inserts and Connections in Reinforced Concrete Construction
3. UBC Standard 26-10, Concrete Tests
4. UFC (Uniform Fire Code)

G. NEMA (National Electric Manufacturer's Association)

1. To be filled in.
2. To be filled in.

H. NFPA (National Fire Protection Association)

1. Pamphlet 1, Fire Prevention Code
2. Pamphlet 13, Sprinkler Systems, Installation
3. Pamphlet 24, Private Fire Service Mains
4. Pamphlet 70, NEC (National Electric Code)
5. Pamphlet 71, Signaling Systems, Central Station
6. Pamphlet 80, Fire Doors and Windows
7. Pamphlet 101, Life Safety Code

I. UL (Underwriters' Laboratories, Inc.)

1. To Be filled in or not used.
2. To be filled in or not used.

1.04 ABBREVIATIONS

A. Listed hereinafter are the various organizations or references which may appear in the Contract Documents, along with their respective acronyms and/or abbreviations:

| | |
|---|---|
| AA | Aluminum Association |
| AABC | Associated Air Balance Council |
| AAMA | Architectural Aluminum Manufacturers Association |
| AAP | Affirmative Action Program |
| AASHTO | American Association of State Highway and Transportation Officials |
| ABMA | American Boiler Manufacturers Association |
| ABPA | American Board Products Association |
| ACI | American Concrete Institute |
| AED | Association of Equipment Distributors |
| AGA | American Gas Association |
| AISC | American Institute of Steel Construction |
| AISI | American Iron and Steel Institute |
| AITC | American Institute of Timber Construction |
| ANSI | American National Standards Institute (formerly American Standards Association) |
| AMCA | Air Moving and Conditioning Association, Inc. |
| ANSI | American National Standards Institute |
| APA | American Plywood Association |
| ARI | Air Conditioning and Refrigeration Institute |
| ASHRAE | American Society of Heating, Refrigeration and Air Conditioning Engineers |
| ASI | Architect's Supplemental Instructions |
| ASME | American Society of Mechanical Engineers |
| ASTM | American Society for Testing and Materials |
| AWCI | Association of the Wall and Ceiling Industries |
| AWPA | American Wood Preserves Association |
| AWPB | American Wood Preservers Bureau |
| AWS | American Welding Society |
| AWWA | American Water Works Association |
| BIL | Basic Insulation Level |
| Cal/OSHA | California Occupational Safety and Health Administration |
| CalTrans | State of California, Department of Transportation |
| CBC | California Building Code |
| CCD | Construction Change Directive |
| CCR | California Code of Regulations |
| CEC | California Electric Code |
| CFR | Code of Federal Regulations |
| CISPI | Cast Iron Soil Pipe Institute |
| CLMFI | Chain Link Manufacturers Institute |
| CMC | California Mechanical Code |
| CO | Change Order |
| CPC | California Plumbing Code |
| CPM | Critical Path Method |
| CPUC | California Public Utilities Commission |
| CRA | California Redwood Association |
| CRSI | Concrete Reinforcing Steel Institute |
| CS | Commercial Standards, U.S. Department of Commerce |
| CSA | Canadian Standards Association |
| CTI | Ceramic Tile Institute |

| | |
|---|---|
| DSA | Division of State Architect (formerly known as the Office of the State Architect) |
| DHI | Door and Hardware Institute |
| EPA | Environmental Protection Agency |
| FGMA | Flat Glass Marketing Association |
| FM | Factory Mutual |
| FS | Federal Specifications |
| GA | Gypsum Association |
| HPMA | Hardwood Plywood Manufacturers Association |
| HVAC | Heating, Ventilating and Air Conditioning |
| IACS | International Annealed Copper Standards |
| IAPMO | International Association of Plumbing and Mechanical Officials |
| ICBO | International Conference of Building Officials |
| ICEA | Insulated Cable Engineers Association |
| I.D. | Identification |
| IEEE | Institute of Electrical and Electronic Engineers, Inc. |
| IES | Illuminating Engineering Society |
| ISA | Instrumentation Society of America |
| JATC | Joint Apprenticeship Training Committee |
| JV | Joint Venture |
| kW | Kilowatt |
| LBE | Local Business Enterprise |
| MBE | Minority Business Enterprise |
| M.I. | Middle Initial |
| MIA | Masonry Institute of America |
| MIA | Marble Institute of America |
| ml | milliliter |
| MLSFA | Metal Lath/Steel Framing Association |
| mm | millimeter |
| MS | Military Specifications |
| MSDS | Material Safety Data Sheet |
| MSS | Manufacturers Standardization Society of the Valve & Fitting Industry |
| M/WBE | Minority and Woman-Owned Business Enterprise |
| NAAMM | National Association of Architectural Manufacturers |
| NACE | National Association of Corrosion Engineers |
| NBS | National Bureau of Standards |
| NEC | National Electric Code |
| NEMA | National Electric Manufacturer's Association |
| NESC | National Electrical Safety Code |
| NFPA | National Fire Protection Association |
| NFPA | National Forest Products Association |
| NIOSH | National Institute for Occupational Safety and Health |
| NIST | National Institute of Science and Technology (formerly the National Bureau of Standards) |
| NOFMA | National Oak Flooring Manufacturers Association |
| NSF | National Sanitation Foundation |
| NTMA | National Terrazzo & Mosaic Association |
| NWWDA | National Wood Windows and Doors Association |
| OSA | Division of State Architect (formerly known as the Office of the State Architect) |

| | |
|---|---|
| OSHA | Occupational Safety and Health Administration |
| OSHPD | Office of Statewide Health Planning and Department |
| PCA | Cityland Cement Association |
| PCI | Pre-stressed Concrete Institute |
| PDI | Plumbing and Drainage Institute |
| PG&E | Pacific Gas and Electric Company |
| PM | Preventive Maintenance |
| PR | Proposal Request |
| PS | Product Standard, U. S. Department of Commerce |
| RFI | Request for Information |
| RFS | Request for Substitution |
| RIS | Redwood Inspection Service |
| SDI | Steel Deck Institute |
| SFM | State of California, Office of State Fire Marshal |
| SIGMA | Sealed Insulating Glass Manufacturers Association |
| SJI | Steel Joint Institute |
| SMACNA | Sheet Metal and Air Conditioning Contractors National Association |
| SPIB | Southern Pine Inspection Bureau |
| SSPC | Steel Structures Painting Council |
| SVP | Silicon Valley Power |
| SWI | Steel Window Institute |
| TCA | Tile Council of America |
| TIE | Time Impact Evaluation |
| UBC | Uniform Building Code |
| UFC | Uniform Fire Code |
| UL | Underwriters' Laboratories, Inc. |
| UMC | Uniform Mechanical Code |
| UPC | Uniform Plumbing Code |
| USA | Underground Service Alert |
| USC | United States Code |
| WCLIB | West Coast Lumber Inspection Bureau |
| WIC | Woodwork Institute of California |
| WHI | Warnock Hersey International |
| WWPA | Western Wood Products Association |

B. ABBREVIATIONS IN SPECIFICATIONS

| | |
|---|---|
| accord | accordance |
| AWG | American Wire Gauge |
| cm. | centimeter (centimeters) |
| Co. | Company |
| Corp. | Corporation |
| cu. | cubic |
| Div. | Division |
| dia. | diameter |
| ft. | foot (feet) |
| g./gr. | gram (grams) |
| gal. | gallon (gallons) |
| gpd | gallons per day |
| gpm | gallons per minute |

| | |
|---|---|
| hr. | hour |
| in. | inch (inches) |
| Inc. | Incorporated |
| kg. | kilogram (kilograms) |
| km. | kilometer (kilometers) |
| kW | Kilowatt |
| l. | liter (liters) |
| lbs. | pounds |
| m | meter (meters) |
| Mfg. | Manufacturing |
| mg. | milligram (milligrams) |
| ml./mls. | milliliter (milliliters) |
| mm. | millimeter (millimeters) |
| No. | number |
| o.c. | on centers |
| O.D. | outside diameter |
| psi | pounds per square inch |
| psf | pounds per square foot |
| sq. | square |
| T & G | tongue and groove |
| U.S. | United States |
| yd. | yard (yards) |

C. ABBREVIATIONS IN DRAWINGS

Additional abbreviations, used only on drawings, are listed thereon.

1.05 SYMBOLS

A. SYMBOLS IN SPECIFICATIONS

| | |
|---|---|
| : | "shall be" or "shall" - where used within sentences or paragraphs |
| #1 | number |
| 1# | pound |
| & | and |
| % | percent |
| C. | Centigrade |
| F. | Fahrenheit |
| ' | degree |
| / | per, except where used to combine words; example: power/fuel. |
| " | inch (inches) |
| ' | foot (feet) |
| @ | at |
| ° | Degree |

B. SYMBOLS IN DRAWINGS

Symbols, used only on Drawings, are shown thereon.

1.06 DEFINITIONS

A. Wherever any of the words or phrases defined below, or a pronoun used in place thereof, is used in any part of the Contract Documents, it shall have the meaning here set forth. In the Contract Documents, the neuter gender includes the feminine and masculine, and the singular number includes the plural. While City has made an effort to identify all defined terms with initial caps, the following definitions shall apply regardless of case unless the context otherwise requires:

ADDENDA: Written or graphic instruments issued prior to the opening of Bids which clarify, correct or change the bidding requirements or the Contract Documents. Addenda shall not include the minutes of the Pre-bid Conference and Site Visit.

AGREEMENT (Document 00520): Agreement is the basic contract document that binds the parties to construction Work. Agreement defines relationships and obligations between City and Contractor and by reference incorporates Conditions of Contract, Plans, Specifications and contains Addenda and all Modifications subsequent to execution of Contract.

ALTERNATE: Work added to or deducted from the Base Bid, if accepted by City.

APPROVED EQUAL: Approved in writing by City as being of equivalent quality, utility and appearance.

ARCHITECT: The person holding a valid California State Architect's license, whose firm has been designated within the Contract Documents as Architect to provide architectural services on the Project, and whom may have engaged engineering subconsultants to provide services on Project. When Architect is referred to within the Contract Documents and no Architect has in fact been designated, then the matter shall be referred to City. The term Architect shall be construed to include all his or her consultants retained for the Project, as well as Architect's employees. When the designated Architect is an employee of City, Architect's authorized representatives on the Project will be included under the term Architect.

APPLICATION FOR PAYMENT: Written application for monthly or periodic progress or final payment made by Contractor complying with the Contract Documents.

Asbestos: Any material that contains more than one percent asbestosis and is friable or is releasing asbestos fibers into the air above current action levels established by OSHA or Cal/OSHA.

ASSIGNED CONTRACT: The 'Package B' Contract, PALM SUBSTATION 60kV EXTENSION PROJECT.

ASSIGNED CONTRACTOR: The contractor performing The 'Package B' Contract, PALM SUBSTATION 60kV EXTENSION Project, Contract No. 2375B, which is assigned to the Contractor. The Assigned Contractor is a subcontractor to the Contractor.

BID: The offer or proposal of the Bidder submitted on the prescribed form setting forth the prices for the Work to be performed.

BIDDER: One who submits a Bid.

BIDDING DOCUMENTS: All documents comprising the Project Manual (including all documents and specification sections listed on Document 00010 Table of Contents), including documents supplied for bidding purposes only and Contract Documents.

BOARD: The Board of Supervisors of the City.

BUSINESS DAY: Any Day other than Saturday, Sunday, and the following days that have been designated as holidays by City. If a holiday falls on a Saturday, the preceding Friday will be the holiday. If a holiday falls on a Sunday, the following Monday will be the holiday.

(a) New Year's Day, January 1;
(b) Martin Luther King Jr.'s Birthday, third Monday in January;
(c) Lincoln's Birthday, February 12;
(d) Presidents' Day, third Monday in February;
(e) Spring Holiday, March 21
(f) Memorial Day, last Monday in May;
(g) Independence Day, July 4;
(h) Labor Day, first Monday in September;
(i) Admission Day, September 9
(j) Columbus Day, October 13
(k) Veterans' Day, November 11;
(l) Thanksgiving Day, The 4th Thursday in November
(m) The Day following Thanksgiving Day; and
(n) Christmas Day, December 25

BY CITY: Work that will be performed by City or its agents at the City's expense.

BY OTHERS: Work that is outside scope of Work to be performed by Contractor under this Contract, which will be performed by City, other contractors, or other means.

CHANGE ORDER: A written instrument prepared by City and signed by City and Contractor, stating their agreement upon all of the following:

a. a change in the Work,

b. the amount of the adjustment in the Contract Sum, if any, and

c. the amount of the adjustment in the Contract Time, if any.

CITY: The City of Santa Clara, a municipal corporation of the State of California.

CITY-FURNISHED, CONTRACTOR-INSTALLED: Items furnished by City at its cost for installation by Contractor at its cost under this Contract.

CITY REPRESENTATIVE(S): The person or persons assigned by City to be City's agent(s) at the Site.

CODE INSPECTOR: A local or state agency responsible for the enforcement of applicable codes and regulations. This includes, without limitation: City Building Division of Permits and Resources Management Department; City Public Works Department; City of Santa Clara Fire Department; and City of Santa Clara Utilities Department.

CONCEALED: Work not exposed to view in the finished Work, including within or behind various construction elements.

CONSTRUCTION CHANGE DIRECTIVE: A written order prepared by City with assistance from Architect and signed by City, directing a change in the Work and stating a proposed basis for adjustment, if any, in the Contract Sum or Contract Time, or both. On this Project, a Field Instruction serves the same function as a Construction Change Directive.

CITY CONSTRUCTION MANAGER: The person or persons assigned by City to be the City's agent(s) at the Site.

CONSULTANT: See Document 00805 (Supplemental General Conditions – Hazardous Materials) (if included).

CONSULTING ENGINEER: See Document 00520 (Agreement) (if this term is used).

CONSTRUCTION MANAGER: See Document 00520 (Agreement) (if this term is used).

CONTRACT CONDITIONS: Consists of two parts: General Conditions and Supplementary Conditions.

a. General Conditions are general clauses that are common to the City Contracts.

b. Supplementary conditions modify or supplement General Conditions to meet specific requirements for this Contract.

CONTRACT DOCUMENTS: Contract Documents shall consist of the documents identified as the Contract Documents in Document 00520 Agreement, plus all changes, addenda and modifications thereto.

CONTRACT MODIFICATION: Either:

a. a written amendment to Contract signed by Contractor and City; or

b. a Change Order; or

c. a Construction Change Directive; or

d. a written directive for a minor change in the Work issued by City.

CONTRACT SUM: The sum stated in the Agreement and, including authorized adjustments, the total amount payable by City to Contractor for performance of the Work and the Contract Documents. The Contract Sum is also referred to as the Contract Price or the Contract Amount.

CONTRACT TIMES: The number or numbers of days or the dates stated in the Agreement (i) to achieve Substantial Completion of the Work or designated milestones and/or (ii) to complete the Work so that it is ready for final payment and is accepted.

CONTRACTOR: The person or entity identified as such in the Agreement and referred to throughout the Contract Documents as if singular in number and neuter in gender. The term "Contractor" means the Contractor or its authorized representative.

CONTRACTOR'S EMPLOYEES: Persons engaged in execution of Work under Contract as direct employees of Contractor, as subcontractors, or as employees of subcontractors.

DAY: One calendar day, unless the word "day" is specifically modified to the contrary.

DEFECTIVE: An adjective which, when modifying the word "Work", refers to Work that is unsatisfactory or unsuited for the use intended, faulty, or deficient, that it does not conform to the Contract Documents, or does not meet the requirements of any inspection, reference standard, test or approval referred to in the Contract Documents (including but not limited to approval of samples and "or equal" items), or has been damaged prior to final payment (unless responsibility for the protection thereof has been assumed by City). City is the judge of whether Work is defective.

DRAWINGS: The graphic and pictorial portions of Contract Documents, wherever located and whenever issued, showing the design, location and dimensions of the Work, generally including plans, elevations, sections, details, schedules and diagrams.

ENGINEER: The person holding a valid California State Engineer's license, whose firm has been designated within the Contract Documents as Engineer to provide engineering services on the Project, and whom may have engaged engineering subconsultants to provide services on Project. When Engineer is referred to within the Contract Documents and no Engineer has in fact been designated, then the matter shall be referred to City. The term Engineer shall be construed to include all his or her consultants retained for the Project, as well as Engineer's employees. When the designated Engineer is an employee of City, Engineer's authorized representatives on the Project will be included under the term Engineer.

EQUAL: Equal in opinion of City. Burden of proof of equality is responsibility of Contractor.

EXPOSED: Work exposed to view in the finished Work, including behind louvers, grilles, registers and various other construction elements.

FIELD INSTRUCTION: A written order prepared by City with assistance from Architect and signed by City, directing a change in the Work and stating a proposed basis for adjustment, if any, in the Contract Sum or Contract Time, or both.

FINAL ACCEPTANCE or FINAL COMPLETION: City's acceptance of the Work as satisfactorily completed in accordance with Contract Documents. Requirements for Final Acceptance/Final Completion include, but are not limited to:

a. All Systems having been tested and accepted as having met requirements of Contract Documents.

b. All required instructions and training sessions having been given by Contractor.

c. All as-built drawings and operations and maintenance manuals and Machine Inventory Sheets having been submitted by Contractor, reviewed by City and Architect and accepted by City.

d. All punch list work, as directed by City, having been completed by Contractor.

e. Generally all Work, except Contractor maintenance after Final Acceptance, having been completed to satisfaction of City.

FORCE-ACCOUNT: Work directed to be performed without prior agreement as to lump sum or unit price cost thereof, and which is to be billed at cost for labor, materials, equipment, taxes, and other costs, plus a specified percentage for overhead and profit.

FURNISH: Supply only, do not install.

INDICATED: Shown or noted on the Drawings.

TESTING AND SPECIAL INSPECTION AGENCY: An independent entity engaged by City to inspect and/or test the workmanship, materials, or manner of construction of buildings or portions of buildings, to determine if such construction complies with the Contract Documents and applicable codes.

INSTALL: Install or apply only, do not furnish.

LATENT: Not apparent by reasonable inspection, including but not limited to, the inspections and research required as a condition to bidding under the General Conditions.

LAW: Unless otherwise limited, all applicable laws including without limitation all federal, state, and local laws, statutes, standards, rules, regulations, ordinances, and judicial and administrative decisions

MATERIAL OR MATERIALS: These words shall be construed to embrace machinery, manufactured articles, materials of construction (fabricated or otherwise), and any other classes of material to be furnished in connection with Contract, except where a more limited meaning is indicated by context.

MILESTONE: A principal event specified in Contract Documents relating to an intermediate completion date or time prior to Substantial Completion of all Work.

MODIFICATION: Same as Contract Modification.

NOT IN CONTRACT: Work that is outside the scope of work to be performed by Contractor under this Contract.

NOTICE OF COMPLETION: Shall have the meaning provided in California Civil Code Section 3093, and any successor statute.

OFF SITE: Outside geographical location of the Project.

OWNER: The City.

PARTIAL UTILIZATION: Use by City of a substantially completed part of the Work for the purpose for which it is intended (or a related purpose) prior to Substantial Completion of all of the Work.

PCB: Polyclorinated byphenyl.

Phase: A specified portion of the Work (if any) specifically identified as a Phase in Document 00520 (Agreement) or Document 01100 (Summary).

PRODUCT DATA: That information (including brochures, catalogue cuts, MSDS, etc.) supplied by the vendor describing the technical and commercial characteristics of the supplier equipment or materials, and accompanying commercial terms such as warranties, instructions and manuals.

PROGRESS REPORT: A periodic report submitted by Contractor to City with progress payment invoices accompanying actual work accomplished to the Progress Schedule. See Section 01320, Progress Schedules and Reports and Document 00700, General Conditions.

PROJECT: Total construction of which Work performed under this Contract may be whole or part.

PROJECT FLOAT: As defined in Section 01320, paragraph 1.2.B.3.

PROJECT INSPECTOR: A person engaged by City to provide general observation of the Work, scheduling requested inspections by Contractor and reporting to City.

PROJECT MANAGER: The person or persons assigned by City to be the City's agent(s) at the Site.

PROJECT MANUAL: Project Manual consists of Bidding Requirements, Agreement, Bonds, Certificates, Contract Conditions, and Specifications.

PROJECT RECORD DRAWINGS: All Project deliverables required under Sections 01780 et seq., including without limitation, as-built drawings, operations and maintenance manuals Installation, Operation, and Maintenance Manuals, and Machine Inventory Sheets.

PROVIDE: Furnish and install.

REQUEST FOR INFORMATION ("RFI"): A document prepared by Contractor requesting information regarding the Project or Contract Documents. The RFI system is also a means for City and Architect to submit Contract Document clarifications or supplements to Contractor.

REQUEST FOR PROPOSALS ("RFP"): A document issued by City to Contractor whereby City may initiate changes in the Work or Contract Time as provided in Contract Documents. See Document 01250 (Modification Procedures).

REQUEST FOR SUBSTITUTION ("RFS"): A document prepared by Contractor requesting substitution of materials as and to the extent permitted in Contract Documents.

RFI-REPLY: A document consisting of supplementary details, instructions or information issued by City or Architect, which clarifies or supplements Contract Documents, and with which Contractor shall comply. RFI-Replies do not constitute changes in Contract Sum or Contract Times except as otherwise agreed in writing by City. RFI-Replies will be issued through the RFI administrative system.

SAMPLES: Physical examples of materials, equipment, or workmanship that are representative of some portion of the Work and which establish the standards by which such portion of the Work will be judged.

SHOP DRAWINGS: All drawings, diagrams, illustrations, schedules and other data or information which are specifically prepared or assembled by or for Contractor and submitted by Contractor to illustrate some portion of the work.

SHOWN: As indicated on Drawings.

SITE: The particular geographical location of Work performed pursuant to Contract within the City of Santa Clara.

SPECIFICATIONS: The written portion of the Contract Documents consisting of requirements for materials, equipment, construction systems, standards and workmanship for the Work, and performance of related services; and are contained in Divisions 1 through 16. (If a Division 17 is used, then it is considered as part of the Specifications.)

SPECIFIED: As written in Specifications.

STANDARD DETAILS: Shall mean the City of Santa Clara Standard Details.

STANDARD SPECIFICATIONS: Shall mean the latest revision of the CalTrans specifications.

SUBCONTRACTOR: A person or entity who has a direct contract with Contractor to perform a portion of the Work at the site. The term "subcontractor" is referred to throughout the Contract Documents as if singular in number and neuter in gender and means a subcontractor or an authorized representative of the subcontractor. The term "subcontractor" does not include a separate contractor or subcontractors of a separate contractor.

SUBSTANTIAL COMPLETION: The Work (or a specified part thereof) has progressed to the point where, in the opinion of City as evidenced by a Certificate of Substantial Completion, the Work is sufficiently complete, in accordance with Contract Documents, so that the Work (or specified part) can be utilized for the purposes for which it is intended; or if no such certificate is issued, when the Work is complete and ready for final payment as evidenced by written recommendation of City for final payment. The terms "substantially complete" and "substantially completed" as applied to all or part of the Work refer to Substantial Completion thereof.

SUPPLEMENTAL INSTRUCTION: A written work change directive to Contractor from Architect, approved by City, ordering alterations or modifications which do not result in change in Contract Sum or Contract Times, and do not substantially change Drawings or Specifications.

TECHNICAL SPECIFICATIONS: Specification Divisions 2 through 16 of the Contract Documents.

TESTING AND SPECIAL INSPECTION AGENCY : An independent entity engaged by City to inspect and/or test the workmanship, materials, or manner of construction of buildings or portions of buildings, to determine if such construction complies with the Contract Documents and applicable codes.

UNDERGROUND FACILITIES: All pipelines, conduits, ducts, cables, wires, manholes, vaults, tanks, tunnels or other such facilities or attachments, and any encasements containing such facilities which have been installed underground to furnish any of the following services or materials: Electricity, gases, steam, liquid petroleum products, telephone or other communications, cable television, sewage and sewage drainage removal, traffic or other control systems or domestic water or fire water.

UNIT PRICE WORK: Shall be the portions of the Work for which a unit price is provided in Document 00520 (Agreement) or Section 01100 (Summary).

WORK: The entire completed construction or the various separately identifiable parts thereof required to be furnished under the Contract Documents within the Contract Time. Work includes and is the result of performing or furnishing labor and furnishing and incorporating materials and equipment into the construction, and performing or furnishing services and furnishing documents, all as required by the Contract Documents including everything shown in the Plans and set forth in the Specifications. Wherever the word "work" is used, rather than the word "Work", it shall be understood to have its ordinary and customary meaning.

B. Wherever words "as directed", "as required", "as permitted", or words of like effect are used, it shall be understood that direction, requirements, or permission of City is intended. Words "sufficient", "necessary", "proper", and the like shall mean sufficient, necessary or proper in judgement of City. Words "approved", "acceptable", "satisfactory", "favorably reviewed" or words of like import, shall mean approved by, or acceptable to, or satisfactory to, or favorably reviewed by City.

C. Wherever the word "may" is used, the action to which it refers is discretionary. Wherever the word "shall" is used, the action to which it refers is mandatory.

PART 2 PRODUCTS

Not applicable to this section.

PART 3 EXECUTION

Not applicable to this section.

**END OF SECTION**

THIS PAGE

INTENTIONALLY

LEFT BLANK

# DOCUMENT 01450

# TESTING AND INSPECTION

## PART 1 GENERAL

### 1.01 SECTION INCLUDES

A. Regulatory requirements for testing and inspection.

B. Contractor's quality control.

C. Quality of the Work.

D. Inspections and tests by governing authorities.

E. Inspections and tests by serving utilities.

F. Inspections and tests by manufacturer's representatives.

G. Inspections by Independent Testing and Inspection Agency.

### 1.02 RELATED SECTIONS

Section 01410 Regulatory Requirements: Compliance with applicable codes, ordinances and standards.

### 1.03 CONTRACTOR'S QUALITY CONTROL

A. Contractor's Quality Control: Contractor shall ensure that products, services, workmanship and site conditions comply with requirements of Contract Documents by coordinating, supervising, testing and inspecting the work and by utilizing only suitably qualified personnel.

B. Quality Requirements: Work shall be accomplished in accordance with quality requirements of Plans and Specifications, including, by reference, all codes, laws, rules, regulations and standards. When no quality basis is prescribed, the quality shall be in accordance with the best-accepted practices of the construction industry for the locale of the Project, for projects of this type.

C. Quality Control Personnel: Contractor shall employ and assign knowledgeable and skilled personnel as necessary to perform quality control functions to ensure that the Work is provided as required.

### 1.04 QUALITY OF THE WORK

A. Quality of Products: Unless otherwise indicated or specified, all products shall be new, free of defects and fit for the intended use.

B. Quality of Installation: All Work shall be produced plumb, level, square and true, or true to indicated angle, and with proper alignment and relationship between the various elements.

C. Protection of Completed Work: Take all measures necessary to preserve completed Work free from damage, deterioration, soiling and staining, until Acceptance by the City.

D. Standards and Code Compliance and Manufacturer's Instructions and Recommendations: Unless more stringent requirements are indicated or specified, comply with manufacturer's instructions and recommendations, reference standards and building code research report requirements in preparing, fabricating erecting, installing, applying, connecting and finishing Work.

E. Deviations from Standards and Code Compliance and Manufacturer's Instructions and Recommendations: Document and explain all deviations from reference standards and building code research report requirements and manufacturer's product installation instructions and recommendations, including acknowledgement by the manufacturer that such deviations are acceptable and appropriate for the Project.

F. Verification of Quality: Work shall be subject to verification of quality by City or Engineer in accordance with provisions of the Contract Documents.

1. Contractor shall cooperate by making Work available for inspection by City, Engineer or their designated representatives.
2. Such verification may include mill, plant, shop, or field inspection as required.
3. Provide access to all parts of the Work, including plants where materials or equipment are manufactured or fabricated.
4. Provide all information and assistance as required, including that by and from subcontractors, fabricators, materials suppliers and manufacturers, for verification of quality by City or Engineer.
5. Applicable provisions of the Contract Documents shall govern Contract modifications, if any, resulting from such verification activities.

G. Observations by City's Representative's, Engineer's Consultants: Periodic and occasional observations of Work in progress will be made by City Representative's, Engineer and Engineer's consultants as deemed necessary to review progress of Work and general conformance with design intent.

H. Limitations on Inspection, Test and Observation: Neither employment of independent testing and inspection agency nor observations by Engineer and Engineer's consultants shall in any manner relieve Contractor of obligation to perform Work in full conformance to all requirements of Contract Documents.

I. City's Acceptance and Rejection of Work: City reserves the right to reject all Work not in conformance to the requirements of the Drawings and Specifications.

J. Correction of Non-Conforming Work: Non-conforming Work shall be modified, replaced, repaired or redone by the Contractor at no change in Contract Sum or Contract Time.

K. Acceptance of Non-Conforming Work: Acceptance of nonconforming Work, without specific written acknowledgement and approval of the City, shall not relieve the Contractor of the obligation to correct such Work.

L. Contract Adjustment for Non-Conforming Work: Should Architect or City determine that it is not feasible or in City's interest to require non-conforming Work to be repaired or replaced, an equitable reduction in Contract Sum shall be made by agreement between City and Contractor. If equitable amount cannot be agreed upon, a Construction Change Directive will be issued and the amount in dispute resolved in accordance with applicable provisions of the General Conditions.

M. Non-Responsibility for Non-Conforming Work: Engineer and Engineer's consultants disclaim any and all responsibility for Work produced not in conformance with the Drawings and Specifications.

N. Responsibility for Defective Work: Contractor shall have full responsibility for all consequences resulting from defective work, including without limitation all delays, disruptions, extra inspection and correction costs by Contractor and City and re-Work, and extra time and costs of all types. Contractor waives excuses for defective work relating to City's prior review of Submittals and/or prior failure to notice defective work in place on inspection.

## 1.05 INSPECTIONS AND TESTS BY GOVERNING AUTHORITIES

A. Regulatory Requirements for testing and Inspection: Comply with California Building Code (UBC) requirements and all other requirements of governing authorities having jurisdiction.

B. Inspections and Tests by Governing Authorities: Contractor shall cause all tests and inspections required by governing authorities having jurisdiction to be made for Work under this Contract.

1. Such authorities include City of Santa Clara Public Works Department, Building Department, Fire Department, and City retained Inspection, and Testing Organizations or similar agencies.

2. Except as specifically noted, scheduling, conducting and paying for such inspections shall be solely the Contractor's responsibility.

3. Notify City in writing during normal business hours, Monday through Friday, at least 24 hours before the required inspection date.

///

///

1.06 INSPECTIONS AND TESTS BY SERVING UTILITIES

A. Inspections and Tests by Serving Utilities: Contractor shall cause all tests and inspections required by serving utilities to be made for Work under this Contract. Scheduling conducting and paying for such inspections shall be solely the Contractor's responsibility.

1.07 INSPECTIONS AND TESTS BY MANUFACTURER'S REPRESENTATIVES

A. Inspections and Tests by Manufacturer's Representatives: Contractor shall cause all tests and inspections specified to be conducted by materials or systems manufacturers to be made. Additionally, all tests and inspections required by materials or systems manufacturers as conditions of warranty or certification of Work shall be made, the cost of which shall be included in the Contract Sum.

1.08 INSPECTIONS BY INDEPENDENT TESTING AND INSPECTION AGENCY

A. City will select an independent testing and inspection agency or agencies to conduct tests and inspections as indicated on Plans, in Specifications and as required by governing authorities having jurisdiction.

B. Responsibility for payment for tests and inspections shall be as indicated in schedule below. All time and costs for Contractor's service related to such tests and inspections shall be included in Contract Time and Contract Sum.

C. Contractor shall notify City on inspection request form provided by City and, if directed by City, testing and inspection agency, when Work is ready for specified tests and inspections. This written notification should be delivered during normal business hours, Monday through Friday, at least 24 hours before the requested inspection date.

D. Contractor shall in addition to the requirements of the Contract comply with all permit and code related requirements.

E. Contractor shall pay for all additional charges by testing and inspection agencies and governing authorities having jurisdiction due to the following:

1. Contractor's failure to properly schedule or notify testing and inspection agency or authorities having jurisdiction.
2. Changes in sources, lots or suppliers of products after original tests or inspections.
3. Changes in means methods, techniques, sequences and procedures of construction that necessitate additional testing, inspection and related services.
4. Changes in mix designs for concrete and mortar after review and acceptance of submitted mix design.
5. Contractor submitted requests to change materials or products, which are accepted, but require testing and/or reinspection beyond original design.
6. Costs of travel, and per diem to perform factory testing on-sites over 50 miles from the jobsite.
7. Cost of re-testing work due to failure of the original test.

F. Tests and special inspections to be paid by the City shall include the following:

| SECTION | MATERIAL TESTS |
|---|---|
| 04200 | Masonry block strength, shrinkage and moisture content |
| 04200 | Masonry grout strength |
| 05120 | High strength grout strength |
| 04200 | Masonry mortar strength |
| 05120 | Structural steel bolting and welding |
| 02300 | Pile concrete and reinforcing |
| 02200 | Trench backfill |
| 02200 | Building pad sub-grade and imported fill |
| 02300 | Load test pile dowels |

| SECTION | SPECIAL INSPECTION |
|---|---|
| 03200 | Placement of reinforcing steel for concrete and concrete masonry |
| 03300 | Placement of cast-in-place concrete |
| 04200 | Placement of concrete block and grout |
| 05120 | Structural steel fabrication, erection, bolting and welding |
| 07511 | Installation of roof membrane |
| 05500, 04200, 05120 | Installation of anchor bolts, dowels embedded in concrete and masonry |
| To be determined | Installation of adhesive (epoxy) connections |
| 02300 | Placement of pile concrete and reinforcement |
| 02300 | Pile driving |
| 02200 | Site grading, road and parking phase |
| 02200 | Trench backfill] |

| SECTION | ENVIRONMENTAL TESTS |
|---|---|
| To be determined | Construction noise monitoring |
| | Storm water runoff sampling |

| SECTION | MATERIAL TESTS |
|---|---|
| 02200, 02222 | Compaction |
| 03300 | Concrete slump and strength<br>Weight of lightweight concrete<br>Water content for controlled mixes<br>Temperature during hot or cold weather |
| 03370 | Shotcrete soundness and strength |
| 04220 | Block strength and moisture content<br>Grout Strength |
| 05100 | Steel welding and bolting |
| 05300 | Shear connector stud |
| TBD | Expansion and epoxy anchors |

| SECTION | SPECIAL INSPECTION |
|---|---|
| 02200 | Subgrade beneath mat |
| 02200, 02222 | Filling |
| 03200 | Placement of reinforcing for concrete and shotcrete<br>Installation of mechanical couplers and end anchors<br>Welding of reinforcing bars (not anticipated) |
| 03300 | Concrete placement<br>Grout placement for steel base plates |
| 03370 | Preconstruction test panels<br>Shotcrete placement |
| 04220 | Placement of block, reinforcing bars and grout |
| 05100 | Steel welding and bolting |
| 05300 | Welding of deck and shear connector studs |
| TBD | Expansion and epoxy anchors |

///

///

///

///

///

G. Test and Inspection Reports: After each inspection and test, one copy of report shall be promptly submitted to City, who will distribute copies to Architect, Contractor and any agency having jurisdiction (if required by Code).

1. Reports shall clearly identify the following:

   a. Date issued.
   b. Project name and number.
   c. Identification of product and Specifications Section in which Work is specified.
   d. Name of inspector.
   e. Date and time of sampling or inspection.
   f. Location in Project where sampling or inspection was conducted.
   g. Type of inspection or test.
   h. Date of test.
   i. Results of tests.
   j. Comments concerning conformance with Contract Documents and other requirements.

2. Test reports shall indicate specified or required values and shall include statement whether test results indicate satisfactory performance of products.

3. Samples taken but not tested shall be reported.

4. Test reports shall confirm that methods used for sampling and testing conform to specified test procedures.

5. When requested, testing and inspection agency shall provide interpretations of test results.

H. Contractor Responsibilities in Inspections and Tests:

1. Notify City during normal business hours, Monday through Friday, 24 hours in advance of expected time of each test and inspection to be conducted on the project site, for off-site testing within 50 miles of jobsite, 72 hours notice, and beyond 50 miles 5 working days notice is required, and for all other operations requiring inspection and testing services, by submitting Contractor's inspection request form provided by City.

   a. When tests or inspections cannot be performed after such notice, reimburse City for Testing Laboratory personnel and travel expenses incurred due to Contractor's negligence.

2. Deliver to laboratory or designated location, adequate samples of materials proposed to be used that require advance testing, together with proposed mix designs.

3. Cooperate with testing and inspection agency personnel, City's field representative, Architect and Architect's consultants. Provide access to Work areas and off-site fabrication and assembly locations, including during weekends and after normal work hours.

4. Provide incidental labor and facilities to provide safe access to Work to be tested and inspected, to obtain and handle samples at the Project site or at source of products to be tested, and to store and cure test samples.

5. Provide, at least 15 days in advance of first test or inspection of each type, a schedule of tests or inspections indicating types of tests or inspections and their scheduled dates.

1.09 ADDITIONAL TESTING AND INSPECTION

A. If initial tests or inspections made by the Testing Laboratory reveal that materials do not comply with Contract Documents, or if City has reasonable doubt that materials do not comply with Contract Documents, additional tests and inspections shall be made as directed.

1. If additional tests and inspections establish that materials comply with Contract Documents, City shall pay all costs for such tests and inspections.

2. If additional tests and inspections establish that materials do not comply with Contract Documents, all costs of such tests and inspections shall be deducted from Contract Sum.

3. If Work requiring inspection is covered by follow-on work before it is inspected, Contractor shall uncover work so proper inspections can be performed. All costs of such tests and inspections shall be deducted from Contract Sum.

**END OF SECTION**

# DOCUMENT 01500

# TEMPORARY CONSTRUCTION

PART 1 GENERAL

1.00 SECTION OVERVIEW

A. PART 1 SECTION INCLUDES:

| | |
|---|---|
| 1.01 | TEMPORARY FACILITIES |
| 1.02 | USE OF CITY FACILITY AND EQUIPMENT |
| 1.03 | TEMPORARY ELECTRICITY |
| 1.04 | TEMPORARY LIGHTING |
| 1.05 | PROTECTION OF PUBLIC AND PRIVATE PROPERTY |
| 1.06 | TEMPORARY SANITARY FACILITIES |
| 1.07 | CONSTRUCTION AIDS |
| 1.08 | TEMPORARY HEAT |
| 1.09 | TEMPORARY VENTILATION |
| 1.10 | TEMPORARY TELEPHONE SERVICE |
| 1.11 | TEMPORARY WATER SERVICE |
| 1.12 | SPECIAL EQUIPMENT & CONTROLS |
| 1.13 | WATER CONTROL |
| 1.14 | SCAFFOLDING |
| 1.15 | TEMPORARY ENCLOSURES |
| 1.16 | BARRIERS |
| 1.17 | SITE PROTECTION |
| 1.18 | TREE AND PLANT PROTECTION |
| 1.19 | ACCESS REQUESTS |
| 1.20 | NOISE CONTROL |
| 1.21 | DUST CONTROL |
| 1.22 | TRAFFIC CONTROL |
| 1.23 | DEBRIS CONTROL |
| 1.24 | POLLUTION CONTROL |
| 1.25 | EROSION CONTROL |
| 1.26 | FIRE PROTECTION SYSTEMS |
| 1.27 | SECURITY |
| 1.28 | PROJECT SIGNS |
| 1.29 | FIELD OFFICE TRAILERS AND SHEDS CONSTRUCTION MANAGER'S FIELD OFFICE/FURNISHINGS |
| 1.30 | REMOVAL OF TEMPORARY FACILITIES |
| 1.31 | FORMS |

1.01 TEMPORARY UTILITIES

A. Temporary Connections: The Contractor shall provide all necessary temporary electricity, power, water, sewer, gas, data and other utilities needed for the Work through Final Completion.

B. Contractor shall apply for, coordinate, schedule, and obtain all necessary permits for the Work, including payment of any permit fees charged by entities other than the City of Santa Clara. Only permit fees charged by the City of Santa Clara, which includes Silicon Valley Power, will be waived.

C. Maintain strict supervision of the use of temporary construction facilities. Enforce compliance with applicable standards. Prevent abuses of services.

D. Comply with all code and City requirements for use of temporary facilities and utilities.

1.02 USE OF CITY FACILITY AND EQUIPMENT

A. Contractor will not be allowed to use any facility or equipment, which belongs to the City. Contractor shall provide its own facilities and equipment at its own expense.

B. City Facilities and Sanitary/Nuisance Regulations:

1. Not used.

2. The Contractor shall provide adequate sanitary facilities for the use of those employed to perform Work at the Site. Such facilities shall be made available when the first employees arrive on Site, shall be properly secluded from public observation, and shall be constructed and maintained during the progress of the Work in suitable numbers and at such points and in such manner as may be required.

3. The Contractor shall maintain the sanitary facilities in a satisfactory and sanitary condition at all times and shall enforce their use. Contractor shall rigorously prohibit the committing of nuisances to the sanitary facilities and shall immediately repair or correct any nuisance (graffiti, vandalism, etc.) or any inappropriate or unsafe sanitary condition. Any time the sanitary facilities are deemed to be a nuisance or health hazard, the City will issue a notice to repair. If not cleaned within four (4) hours, the City will resolve the issue by whatever means is deemed appropriate by the City and the City shall back-bill the Contractor for payment of invoices for this service.

4. The Contractor shall rigorously prohibit the committing of nuisances on Site, on the lands of the City, or on adjacent property. Contractor shall immediately repair or correct any nuisance (graffiti, vandalism, etc.) or any inappropriate or unsafe sanity condition adjacent to or associated with any area of Work activity.

1.03 TEMPORARY ELECTRICITY/POWER

A. The Contractor will provide all temporary electricity/power on Site necessary to complete the Work, including all temporary electricity. Work. The Contractor shall contact Silicon Valley Power to confirm the availability of the electrical source. If not currently available, the Contractor shall pay all costs to install and provide the electrical source needed to perform the Work.

B. Contractor shall exercise measures to conserve energy at all times.

C. All electrical work to be in compliance with all reference codes.

D. The Contractor shall pay all electricity costs for temporary lighting currently in use on site, and for the temporary access roadway lighting throughout the duration of the Project.

1.04 TEMPORARY LIGHTING

A. The Contractor will provide and pay for all temporary lighting in accordance with codes and regulations for all Work performed at the Site.

B. The Contractor shall maintain all temporary lighting in current service to light the temporary access roadway/pedestrian walk and other temporary lighting on Site.

1.05 PROTECTION OF PUBLIC AND PRIVATE PROPERTY

A Contractor shall protect, shore, brace, support, and maintain all underground pipes, conduits, drains, and other underground construction uncovered or otherwise affected by its construction operations. All pavement, surfacing, driveways, curbs, walks, buildings, utility poles, guy wires, fences, and other surface structures affected by construction operations, together with all sod and shrubs in yards, parkways, and medians, shall be restored to their original condition, whether within or outside the easement. All replacements shall be made with new materials.

B Contractor shall be responsible for all damage to streets, roads, highways, shoulders, ditches, embankments, culverts, bridges, and other public or private property, regardless of location or character, which may be caused by transporting equipment, materials, or workers to or from the Work, Site or any part thereof, whether by Contractor or Subcontractors. Contractor shall make satisfactory and acceptable arrangements with the City, or the agency or authority having jurisdiction over the damaged property, concerning its repair or replacement or payment of costs incurred in connection with the damage.

C. All fire hydrants and water control valves shall be kept free from obstruction and available for use at all times.

## 1.06 TEMPORARY SANITARY FACILITIES

A Provide and maintain required temporary buildings with sanitary toilets for use of all workers. At a minimum, sanitary facilities shall be located at trailer site, staging area, and adjacent to work area.

B. Sanitary facilities shall be of reasonable capacity, properly maintained throughout the construction period, and obscured from public view to the greatest practical extent. If toilets of the chemically treated type are used, at least one toilet will be furnished for each 20 persons. Contractor shall enforce the use of such sanitary facilities by all personnel at the Site. Comply with all minimum requirements of the Health Department or other public agency having jurisdiction; maintain in a sanitary condition at all times

## 1.07 CONSTRUCTION AIDS

Contractor shall furnish, install, maintain, and operate all construction aids required by it and its Subcontractors in the performance of the Work, except as otherwise provided herein. Such construction aids shall include elevators and hoists, cranes, temporary enclosures, swing staging, scaffolding and temporary stairs. Construction aids shall be furnished without charge to the Subcontractors, and all necessary erection, maintenance, and operating personnel shall be included. In the event of conflict, the contractor furnishing the equipment shall determine priorities in the best interest of the Project.

## 1.08 TEMPORARY HEAT

A. Provide and pay for heat devices and heat as required to perform the Work.

B. Maintain minimum ambient temperature as necessary for specific work activities in areas where construction is in progress, unless otherwise indicated in the specifications.

## 1.09 TEMPORARY VENTILATION

A. Ventilate enclosed areas to assist cure of materials, to dissipate humidity, and to prevent accumulation of dust, fumes, vapors, or gases. Identify potential problems associated with dust, fumes, vapors or gases as required in these specifications. Implement procedures, which will mitigate problems appropriately and within the limits imposed by the Contract Documents.

## 1.10 TEMPORARY TELEPHONE SERVICE

A. Provide, maintain and pay for telephone service to Contractor's field office (and to all required cellular phones) throughout the duration of the Contract.

## 1.11 TEMPORARY WATER SERVICE

A. The Contractor will provide all temporary water necessary for the Work.

B. Where connected to City or Santa Clara Water Department water distribution system, exercise measures to conserve water.

C. The Contractor shall contact the Package B Contractor prior to bid to determine any special needs for the erection of structural steel.

## 1.12 SPECIAL EQUIPMENT AND CONTROLS

A. Equipment Provided by the Assigned Contractor: The Assigned Contractor shall provide all necessary equipment, such as, but not limited to tower cranes, truck cranes, and welding machines to install the structural steel in the Package B Contract. The Assigned Contractor shall provide and pay for any temporary modifications to the work to accommodate the use of its equipment at the Site (e.g., structural design and support for tower crane). The Contractor shall contact the Package B Contractor prior to bid to confirm their scope of work, which will be novated to the Contractor, and to include all other related work in the Contractor's bid.

B. Welding Protection Provided by the Assigned Contractor: The Assigned Contractor shall provide for and maintain all forms of protection necessary to prevent damage resulting from welding structural steel, including, but not limited to previously installed material, equipment, and stored material. Provide all portable welding exhaust systems with HEPA 4 systems.

## 1.13 WATER CONTROL

A. Grade site to drain. Maintain excavations free of water. Provide, operate, and maintain pumping equipment. Contractor shall have two (2) trailer mounted portable pumps on site at all times that excavation is occurring or that heading(s) are open.

B. Protect site from puddling or running water. If, by any action by Contractor, water is allowed to issue forth or flow from any source in an unchecked manner (e.g. from a ruptured irrigation pipe, broken water line, etc.) or to pool for longer than one (1) hour, City shall have the option to repair the rupture at City discretion and to back-charge Contractor for repair work.

C. Provide water barriers as required to protect the Site from soil erosion.

D. Provide methods to control surface water to prevent damage to the Site, or adjoining properties. Control fill, grading and ditching to direct surface drainage away from excavations, pits, tunnels, and other construction areas to direct drainage to proper runoff.

E. Provide, operate and maintain hydraulic equipment of adequate capacity to control surface water.

F. Legally dispose of drainage or ground water. Disposal shall be in a manner, which will prevent flooding, erosions, or other damage to any portion of the Site or to adjoining areas. and in accordance with all permit requirements.

1.14 SCAFFOLDING

Furnish, erect and maintain all required scaffolding to perform the Work. Scaffolding and accessories shall conform to all regulations governing such equipment. Maintain scaffolding in conformance with all applicable safety requirements. Upon completion of use, remove all scaffolding and accessories from the Site. At the Contractor's option, Contractor may have individual subcontractors provide scaffolding for their work; however, all scaffolding remains the responsibility of the Contractor.

1.15 TEMPORARY ENCLOSURES

A. Provide temporary weather-tight enclosure of exterior walls for successive areas of building as work progresses, as necessary, to provide acceptable working conditions for Contractor and to provide weather protection for materials. Said enclosures shall provide for effective temporary heating, and shall prevent entry of unauthorized persons.

1. Provide temporary exterior doors with self-closing hardware and padlocks.

2. Enclosures shall be removable as necessary for work and for handling of materials as well as for emergency access or egress.

C. Provide temporary shoring as required by these Contract Documents. Obtain approval of City for any temporary structural supports.

D. Provide temporary lighting as required to conform to safety standards.

E. Completely remove temporary materials, equipment, and services:

1. Not used.
2. At completion of work, or as directed by City.

F. Clean and repair damage caused by installation or by use of temporary facilities in accordance with the specifications.

G. Restore existing areas and/or facilities used for temporary purposes to specified or to original condition (whichever is more restrictive). In the event that Contractor fails to restore areas and/or facilities as required, the City may restore or replace them and deduct the expense or the replacement from any amounts due or to become due to the Contractor.

## 1.16 BARRIERS

A. Provide all barriers necessary or required by codes and regulations to perform the Work. The Package B Contractor shall be responsible for installing all safety railings required by all applicable codes for all Package B work, including but not limited to floor and roof perimeters and all interior structural steel openings.

B. Shield all welding operations from public view with solid barrier.

C. Contractor shall provide warning signs, barricades, and flag persons as necessary and required by public agencies having jurisdiction for traffic control and to protect public safety where work is performed in City roadways and public rights-of-way or when City roadways and public rights-of-way are temporarily used for deliveries (e.g., concrete pours, major material deliveries, etc.).

D. Where walks, pathways or access ways are closed by the Work, an ADA compliant, alternate walkway shall be provided, preferably within the immediate location of the pathway or access to be closed. Where it is necessary to divert pedestrians into a major detour and/or into a parking lane or traffic area, at no time shall pedestrians be diverted into a portion of a street used for vehicular traffic. Any deviation from the above must have prior approval of the City.

E. At locations where adjacent alternate walkways cannot be provided (i.e. where no pathway or access is available within the immediate location of the interruption) ADA compliant detours shall be clearly planned, marked and constructed. Appropriate signs and barricades must be installed at the limits of construction and in advance of the closure (or detour) in order to divert pedestrians to the appropriate walkway or detour.

F. Wherever it is necessary that trenches and excavation be bridged, bridges shall be constructed in an ADA compliant manner. These bridges shall permit unobstructed flow of traffic or pedestrians and shall meet the following criteria:

1. Bridging shall be secured against displacement by using adjustable cleats, angles, bolts or other devices.

2. Bridging shall be installed to operate with minimum noise.

3. The trench shall be adequately shored, to support the bridging and traffic.

4. Only steel plates shall be used for bridging. Steel plates used for bridging shall extend one (1) foot (minimum) beyond the edges of the trench. The steel plates shall be beveled in order to provide smooth and uninterrupted wheelchair and other access. Temporary paving materials may be used in conjunction with the beveled steel plates.

G. Remove barriers and enclosures only after acceptance of that portion of the Work area.

## 1.17 SITE PROTECTION

Construction limits are shown on the Contract Drawings. All construction activity including material storage, project office(s), equipment parking or other uses shall be confined within those areas, which have been approved in advance by the City. In no case shall the surrounding area outside the construction limits be disturbed unless otherwise noted in the Contract Documents. In the event that it is disturbed, the Contractor shall restore that area, at its cost, as directed by, and to the satisfaction of the City.

## 1.18 TREE AND PLANT PROTECTION

A. Do not park vehicles or store equipment within the drip line of any trees on Site. The trees are protected by temporary fencing, which has been provided by others. The Contractor is encouraged to visit the Site prior to bid to determine the extent of the protection that could limit the Contractors flexibility to access the Site and temporarily store materials. The Contractor is required to remove all temporary fencing around the Site and the temporary tree protection fencing prior to Final Completion in accordance with other sections of these Specifications.

## 1.19 ACCESS REQUESTS

A. The Contractor is required to coordinate access to all work, which also requires coordination with the City and its Construction Manager in order to maintain control and coordination of the work at the Site.

B. The Contractor shall provide convenient and safe access to all Work during construction. Such access shall include, but is not limited to, providing ladders, lifts or scaffolding to allow safe and convenient access by such City representatives as City Inspectors, Architect, Special Inspectors, the Fire Department, and Building Department.

## 1.20 NOISE CONTROL

A. Conform to OSHA and City of Santa Clara noise ordinance requirements unless a more stringent requirement is otherwise specified in the Contract Documents.

B. City has limited hours of certain types of construction operations. Coordinate work with City's Construction Manager.

C. See Contract Specification Section 01590 for additional requirements and limitation regarding noise generated by the Contractor.

1.21 DUST CONTROL

A. Provide positive methods and apply dust control material to minimize raising dust from the construction operations and construction vehicles and provide positive means to prevent airborne dust from dispersing into the atmosphere.

B. See Contract Specification Sections 01100 and 01590 for additional requirements for controlling dust at and around the Site.

1.22 TRAFFIC REGULATIONS, TRAFFIC PLAN, SITE PARKING AND RESTRICTIONS

A. The City has restricted routing of construction traffic and construction vehicle and equipment parking. Parking of construction vehicles will only be in designated nearby areas on City property.

1. Employee Parking shall be arranged by the Contractor. Available parking spaces for Police use in front of the building for the general public shall not be used.

B. Street Lane and Side Walk Closures:

1. Street Closures: Contractor must obtain all necessary permits and comply with all City regulations before closing any streets.

2. Sidewalk Closures: Contractor must obtain all necessary permits and comply with all City regulations before closing sidewalks.

3 The Contractor shall pay for all street and sidewalk closures, including but not limited to, the appropriate street closure and temporary directional signage, crosswalks, flag persons as required to control construction traffic. The City has waived fees for street closures or diversions, but the Contractor must plan, schedule, apply for, coordinate and implement all necessary street closures or diversions. Contractor shall take all necessary precautions to protect the public from construction activities. Minimum requirements for the directional signage and related signage must comply with City traffic regulations. Contact Dave Pitton, Traffic Engineer, at 408-615-3021 for more information regarding traffic regulations and requirements.

1.23 DEBRIS CONTROL

A. Maintain all areas under the Contractor's control, free of extraneous debris.

B. Initiate and maintain a specific program to prevent accumulation of debris at construction site, storage and parking areas, or along access roads and haul routes.

1. Provide containers for deposit of debris.

2. Prohibit overloading of trucks to prevent spillages on access and haul routes.

3. Provide periodic inspection of traffic areas to enforce requirements.

C. Schedule periodic collection and disposal of debris.

1. Provide additional collections and disposal of debris whenever the periodic schedule is inadequate to prevent accumulation or as requested by the City.

1.24 POLLUTION CONTROL

A. Provide methods, means and facilities required to prevent contamination of soil, water or atmosphere by the discharge of noxious substances from construction operations.

B. Provide systems for control of atmospheric pollutants.

1. Prevent toxic concentrations of chemicals.

2. Prevent harmful dispersal of pollutants into the atmosphere.

3. Direct pollutants such as diesel exhaust away from building air intakes.

1.25 EROSION CONTROL

A. The Contractor will be responsible for providing additional erosion control as necessary and is also responsible for removing existing and any added erosion control when it is no longer needed at the Site.

1.26 FIRE PROTECTION SYSTEMS

A. Provide temporary fire protection as required by codes and regulations for Work.

B. Maintain approved fire extinguishers at all work areas and maintain fire department vehicle access as required by the Fire Department. The Contractor is responsible to contact the City Fire Department to insure compliance with all vehicle access by the fire Department.

1.27 SECURITY

Provide adequate security for equipment and construction materials for the Work that are either erected or stored at the Site.

A. Contractor is responsible for the security and protection of the Contractor's work area.

B. If the Contractor requires a sign in procedure, it must be coordinated with the City to avoid confusion.

C. Coordinate with local law enforcement and cooperate at all times with them.

D. If the Contractor fails to adequately secure the Site in the opinion of the City, qualified forces will be employed and costs for the service charged to the Contractor.

E. Maintain fencing at all times.

F. Review and comply with all local ordinances related to emergency response requirements.

G. Develop, submit, update and maintain and emergency response program for this project specific to the needs of the project.

H. Provide list of emergency contact numbers for the Project, including all personnel work and home phone numbers. The Contractor must provide a twenty-four (24) hour contact phone number for Contractor personnel.

I. Provide and post local map with area hospitals and emergency room locations and phone numbers and update this map on a monthly basis.

1.28 PROJECT SIGNS

A. General: Others will provide the Project Sign. Contractor shall pay all cost to include the Contractor's name on Project Sign.

B. Warning Signs on Enclosure Barriers and Construction Gates: Provide as necessary to comply with codes and local laws and regulations.

C. Project Signs: The design of the project signs will be provided by others. The Contractor shall modify the sign to update it with information regarding the Contractor.

E. Interior Signs: Provide temporary interior signs as necessary to comply with codes and local laws and regulations.

F. Additional Signs: Contractor shall provide and install any additional temporary signage as may be necessary to provide safe, reliable, accurate way-finding and construction area marking in accordance with all codes and local laws and regulations.

///

///

1.29 FIELD OFFICE TRAILERS AND SHEDS

A. CONTRACTOR'S FIELD OFFICE:

Furnish and install field office trailer(s), on Site, adequate in size and accommodation for Contractor's offices, superintendent's office, supply and tool room and subcontractors. Location of Contractor's field office trailer must be in the designated staging area as approved by the City. Make the field office available to the City throughout the entire construction period. Field office(s) shall be for safekeeping of plans, specifications and records, and shall contain reference board, table or desk, and chairs. Field offices shall be installed and operated at Contractors expense as a part of the base bid. Field offices in excess of those shown on the drawings shall be at Contractors expense.

1.30 REMOVAL OF TEMPORARY FACILITIES

Maintain all temporary facilities, staging area and controls as long as needed for the safe and proper completion of the Work; and remove all such temporary facilities. Promptly clean and repair damage caused by installation or use of temporary facilities. Restore site including staging area(s) to condition equal to or better than the condition prior to the installation of the temporary facility(s). If the Contractor fails or refused to repair the damage promptly, the City may have the necessary work performed and charge the cost to the Contractor or deduct the expense from any amounts due or to become due to the Contractor.

1.31 FORMS

The Contractor is required to use the City's standard project forms during construction. A project manual will be provided to the Contractor outlining the specific use for each form at the pre-construction conference. Electronic versions of the forms in Microsoft Word will be provided to the Contractor for their use during the Project. The Contractor's attention is also directed to Section 01318, Paragraph 1.04 for additional requirements regarding the use of City supplied forms.

PART 2 PRODUCTS

NOT USED

PART 3 EXECUTION

NOT USED

**END OF SECTION**

# DOCUMENT 01540

# SITE SECURITY AND SAFETY

PART 1 GENERAL

1.01 DESCRIPTION

. This section describes the requirements for providing Site security and safety.

1.02 SUBMITTALS

A. See Section 01330 (Submittal Procedures).

B. Site Security

C. Safety Program.

D. Fire Protection Plan

1.03 WORK SPECIFIED ELSEWHERE

A. Continuously maintain protection as necessary to protect the Work as a whole and in part, and adjacent property and improvements, injuries or damage.

B. Properly protect the Work:

1. With lights, guard rails, temporary covers and barricades.
2. Enclose excavations with proper barricades.
3. Brace and secure all parts of the Work against storm and accident.
4. Provide such additional forms of protection, which may be necessary under existing circumstances.

C. Provide and maintain in good condition all protective measures required to adequately protect the public from hazards resulting from the Work and to exclude unauthorized persons from the Work. When regulated by Building Code, Cal OSHA, or other authority, such legal requirements for protection shall be considered as minimum requirements. Be responsible for the protection in excess of such minimum requirements as required.

1.04 CONTROL OF SITE

Contractor shall ensure that no alcohol, firearms, weapons, or controlled substance enters or is used at the Site. Contractor shall immediately remove from the Site and terminate the employment of any employees found in violation of this provision.

1.05 SITE SECURITY

A. As part of the Work included within the Contract Price, Contractor shall take and be fully responsible for all reasonably required measures to protect and maintain the security of persons, existing facilities and property at the Site, including without limitation preventing

theft, loss, vandalism and improper concealment of personal property of the City and all persons lawfully present on the Site, and including times where workers are not present on the Site. Contractor's measures shall include, at a minimum, maintaining a log of all persons entering and leaving the Site and who they represent, what they are delivering and to whom.

B. No claim shall be made against City by reason of any act of an employee or trespasser, and Contractor shall repair all damage to City's property resulting from Contractor's failure to provide adequate security measures.

C. Contractor shall maintain a lock on the Construction access gate at all times. Contractor shall appoint one person to let people through the gate and maintain the sign-in/out list, with person's name, company, reason for entering, what they are delivering, time and date. Alternatively, Contractor shall provide a full-time guard at the gate at all times to control access and maintain the sign-in/out list. The sign in/out list shall be available to City at anytime upon request. If City determines that the gate has been left unlocked, Contractor shall if requested by City provide a full time guard at no additional expense to the City.

D. Contractor shall supply additional security fencing, barricades, lighting, and other security measures as required to protect and control the Site.

1.06 SAFETY PROGRAM

A. Within 15 calendar days after Notice to Proceed, Contractor shall submit a Safety Program to City for information purposes. Contractor shall be required to comply with the Safety Program and all applicable Federal, State and regulation codes, rules, law and ordinances.

B. Review of the Safety Program shall not relieve Contractor of any responsibility for complying with all applicable safety regulations.

C. It is essential that Contractor and each subcontractor implement an effective and vigorous Safety and Health Program to cover its portion of the Work. Subject to Contractor's overall responsibility for Project safety, it shall be understood that the full responsibility for providing a safe place to work with respect to its portion of the Work rests with each individual Contractor and subcontractor.

**D. Safety Program components:**

1. ***Injury and Illness Prevention Program (IIPP): Conforming to the General Industrial Safety Orders (CCR Title 8, Division 1, Chapter 4, Subchapter 7, Section 3203), and the California Labor Code (Section 6401.7).***

2. ***Site-Specific Safety and Health Plan (SSHP): Describing health and safety procedures that shall be implemented during the Work in order to ensure safety of the public and those performing the Work. Follow the guidelines for a SSHP listed in CCR Title 8, Division 1, Chapter 4, Subchapter 7, Section 5192, Item (b)(4) f.***

3. ***Confined Space Program: The Site contains permit- and non-permit-confined spaces. City will provide Contractor with any available information regarding permit space hazards, entry operations, and safety information relating to work in the permit spaces as set forth in the General Industrial Safety Orders (CCR Title 8, Division 1, Chapter 4, Subchapter 7, Section 5157). Permit space entry is allowed only through compliance with a permit space program meeting the requirements of Section 5157 of the General Industrial Safety Orders. During entry operations, or at the conclusion of entry operations, verbally notify Engineer of the permit space program followed and of any hazards confronted or created in permit spaces during entry operations.***

4. ***The wearing of hard hats will be mandatory at all times for personnel on Site. Contractor shall supply sufficient hard hats to equip properly all employees and visitors.***

E. Whenever an exposure exists, appropriate personal protective equipment (PPE) will be used by all affected personnel. Contractor shall supply PPE to all personnel under its direction.

1.07 SAFETY REQUIREMENTS

A. Standards: Maintain the Site in accordance with State and local safety and insurance standards.

B. Hazards Control:

1. Store volatile wastes in covered metal containers and remove from premises daily.

2. Prevent accumulation of wastes, which create hazardous conditions.

3. Provide adequate ventilation during use of volatile or noxious substances.

C. Conduct cleaning and disposal operations to comply with local ordinances and anti-pollution laws.

1. Do not burn or bury rubbish and waste material at the Site.

2. Do not dispose of volatile wastes such as mineral spirits, oil, or paint thinner in storm or sanitary drains.

3. Do not dispose of wastes into streams or waterways.

D. Provide accident information on the forms provided by Contractor. This information will be provided o the same day as the occurrence of said accident.

1.08 SITE SAFETY OFFICER

A. Contractor shall designate one of its staff as "Site Safety Officer" whose duties will include responsibility for enforcing the environmental protection provisions of these Specifications including safety and health, the requirements of the Occupational Safety Health Act, and other applicable Federal, State and local standards. Contractor shall submit for review by City its intended traffic flow plan, security plan, program for temporary structures, housecleaning plan, safety and health plan. After review by City, the implementation and changes in the programs shall be requested by Contractor through the Site Safety Officer for written concurrence by City.

B. Representative(s) of City Risk Management will be allowed access to accident/injury and illness reports, inspection reports, scheduling and construction meetings, and safety meetings.

**1.09 FIRE PROTECTION PLAN**

**A. Within 15 days after Notice to Proceed submit one copy of a fire protection plan that has been reviewed and approved by the Santa Clara County Fire Department. It is recommended that the plan include, but not be limited to, a discussion of the following items:**

1. ***Equipment spark arresters***
2. ***Fire-extinguishing equipment on hand***
3. ***Method of operation in case of fire***
4. ***Notification to authorities of any fire***
5. ***Access available during performance of Work***
6. ***Educating workers of fire protection plan***
7. ***Storage protection for flammable materials***
8. ***Ventilation and illumination equipment***

PART 2 PRODUCTS
Not used

PART 3 EXECUTION
Not used

END OF SECTION

# DOCUMENT 01590

# CITY MITIGATION MEASURES

PART 1 GENERAL

1.01 SUMMARY

A. SECTION INCLUDES

1. Cultural Resources & Human Remains Requirements

2. Air Quality Measures

3. Noise Reduction Measures

4. Other City Requirements

1.02 RELATED SECTIONS

A. Section 01000-Summary of Work

B. Section 01500-Temporary Construction

1.03 GENERAL

In January 2001, the City Council approved the mitigation measures included in the Draft and Final Environmental Impact Reports prepared by Environmental Science Associates, dated October 27, 2000 and November 30, 2000, respectively. These reports are available for review at the City's office (1500 Warburton Ave, Santa Clara). The Contractor shall comply with and implement the Environmental Impact Report mitigation measures, which are listed in Paragraph 1.04 and Paragraph 1.05 of this Section of the Contract Specifications, as well as other City mitigation measures listed in this Section and the Contract Specifications:

1.04 MITIGATION MEASURES B.3a & B.3b, CULTURAL RESOURCES & HUMAN REMAINS

A. The City and the Planning Division shall be notified at least 48 hours (i.e., 2 business work days) prior to any grading or other subsurface work on the site. In the event that cultural resources are encountered, all work within the proximity of the find shall temporarily halt so that the archaeologist can examine the find and document its provenience and nature (through drawings, photographs, written description, etc. as necessary).

B. If human remains are encountered during project construction, the Contractor shall notify the Santa Clara County Coroner's Office immediately.

The coroner will determine if the remains are those of a Native American, and if they are, will notify the Native American Heritage Commission.

C. The Contractor shall anticipate zero (**0**) workdays of delays and impacts as a result of any discovery of cultural resources or human remains and include these delay and impact costs in its bid. The Contractor shall receive a non-compensable time extension for delays resulting from the discovery of cultural resources or human remains beyond the Contractor's control as defined in Paragraph 15.B of Document 00700, General Conditions.

D. ARCHAEOLOGICAL AND PALEONTOLOGICAL RIGHTS

The Contractor shall notify the City at least five (5) full working days in advance of performing any earth-moving activities to enable the City to provide archaeological monitoring of the work.

Monitoring shall consist of coordinating subsurface work to allow for the careful examination of vertical and horizontal soil relationships for the purpose of defining positive archaeological finds (prehistoric and/or historic). In the event that cultural resources are encountered, all work within the proximity of the find shall temporarily halt so that the archaeologist can examine the find and document its provenience and nature (through drawings, photographs, written description, etc., as necessary). The monitor will then direct the work to either proceed if the find is deemed to be insignificant or is adequately documented and resolved, or continue elsewhere, as appropriate, until adequate mitigation measures are adopted or the matter is otherwise resolved to the satisfaction of the City.

The Contractor shall notify the City a minimum of two (2) full working days in advance of canceling scheduled subsurface construction work including grading or similar work to provide the City with sufficient notice to cancel archaeological monitoring services.

The City may suffer damages in the event that the Contractor failed to comply with the required notification. The parties hereto agree that it is and will be extremely difficult to determine the actual damage that the City will sustain in the event that the City does not receive the required notification; and it is therefore agreed that the Contractor will pay to the City the sum of $1,000 for each occurrence of the Contractor's failure to provide the required notification. The Contractor agrees to pay said liquidated damages herein provided for, and further agrees that the City may deduct the amount thereof from any moneys due or that may become due to the Contractor under the Contract. In addition, in the event that the Contractor fails to comply with the required notification, the Contractor shall cease all construction operations, including non-surface constructions, until the required notification is provided in accordance with the Provisions of this Section.

## 1.05 MITIGATION MEASURE D.1, AIR QUALITY

A. Water all active construction areas at least twice daily or as needed to prevent dust.

B. Cover all trucks hauling soil, sand, and other loose materials, or all trucks shall maintain at least two (2) feet of freeboard.

C. Pave, or apply water three (3) times daily, or apply nontoxic soil stabilizers on all unpaved roads, parking areas, and construction staging areas.

D. Sweep daily with water sweepers all paved access roads, parking areas, and staging areas at construction sites as needed to prevent dust.

E. Sweep streets daily with water sweepers, if visible soil material is carried onto adjacent public streets.

F. Hydroseed or apply nontoxic soil stabilizers to inactive construction areas (previously graded areas inactive for ten (10) days or more).

G. Enclose, cover, water twice daily, or apply nontoxic soil binders to exposed stockpiles (dirt, sand, etc.).

H. Traffic speeds on unpaved roads shall be limited to 15 miles per hour.

I. Install sandbags or other erosion-control measures to prevent silt runoff to public roadways during rainy season construction (November through April).

J. Other related requirements by the City:

1. Dust-proof chutes shall be used for loading construction debris onto trucks. Alternative means of loading construction debris may be permitted if approved by the City.

2. Contractor shall suspend dust-producing activities during periods of high winds when dust control measures are unable to avoid visible dust plumes.

3. During the dry season (May-October) provide equipment and staffing for watering of all exposed or disturbed soil surfaces at least twice daily.

4. Any fine materials transported by truck will be covered or wetted down to control dust.

## 1.06 NOISE REDUCTION MEASURES

A. Contractor shall comply with the City of Santa Clara Noise Ordinance. The following construction activities shall be prohibited:

1. "Operating or causing the operation of any tools or equipment used in construction, drilling, repair, alteration, or demolition work between weekday hours of 7 PM and 7 AM, or 8 PM and 9 AM on weekends or holidays such that the sound therefrom creates a noise disturbance across a residential or commercial real property line, except for emergency work of public service utilities or by variance issued by the City.

2. "Where technically and economically feasible, construction activities shall be conducted in such a manner that the maximum sound levels at affected properties will not exceed those listed in the following schedule: Maximum sound levels for nonscheduled, intermittent, short-term operation (less than 10 days) of mobile equipment shall be 80 dBA daily (7 AM to 7 PM) and 65 dBA weekends (8 AM to 8 PM): Maximum sound levels for repetitively scheduled and relatively long-term operation (periods of 10 days or more) of stationary equipment shall be 65 dBA daily (from 7 AM to & 7 PM and 55 dBA weekends (from 8 AM to 8 PM).

In addition, the use of impulse tools (e.g., hoe-ram, jackhammers, etc.) shall be limited to the hours of 7:00 AM to 5:00 PM.

B. Plywood Barrier & Impulse Tool Shields

1. Impulse tools shall be temporarily shielded when in use (by interposing another truck, a temporary plywood barrier, noise control blankets, or gypsum board, as appropriate).

C. All construction equipment shall be muffled and properly maintained. "Quiet package" equipment (e.g., compressors and generators in separate compartments or otherwise muffled) shall be used on the Site.

D. The City will respond to any complaints regarding construction noise and for coordinating with adjacent land uses. The City shall determine the cause of any complaints and coordinate with the Contractor. The Contractor shall implement effective measures (considered technically and economically feasible by the City) warranted to correct the problem. The telephone number of the NDC shall be posted at the construction site and provided to neighbors in a notification letter sent by the City. The City Representative shall be trained to use a sound level meter and will be available during all construction hours to respond to complaints.

END OF SECTION

# DOCUMENT 01600
# PRODUCT REQUIREMENTS

## PART 1 GENERAL

### 1.1 SECTION INCLUDES

A. Products

B. Product Options and Substitutions

C. Product Delivery Requirements

D. Shipping Requirements

E. Product Storage and Handling Requirements

### 1.2 PRODUCTS

A. Products: New material, machinery, components, equipment, fixtures, and systems forming the Work. Does not include machinery and equipment used for preparation, fabrication, conveying and erection of the Work. Products may also include existing materials or components required for reuse.

B. Do not use materials and equipment removed from existing premises, except as specifically permitted by the Contract Documents.

C. For similar components, provide interchangeable components of the same manufacturer.

### 1.3 PRODUCT OPTIONS AND SUBSTITUTIONS

A. Summary: This paragraph 1.3 describes procedures for selecting products and requesting substitutions of unlisted materials in lieu of materials named in the Specifications or approved for use in Addenda that were not already the subject of a Document 00660 (Substitution Request Form) submittal as provided in Document 00200 (Instructions to Bidders).

B. Contractor's Options:

1. For products specified only by reference standard: Select any product meeting that standard.

2. For products specified by naming one or more products or manufacturers:

   a. Select products of any named manufacturer meeting specifications.

   b. If product becomes unavailable due to no fault of Contractor, submit Request for Substitution (RFS), including all information contained in this Section 01600 and a fully executed Document 00660 (Request for Substitution), but using the term "Contractor" each place the term "Bidder" appears in that form.

C. Substitutions:

1. Except as provided in Document 00200 (Instructions to Bidders) with respect to "or equal" items, City will consider Contractor's substitution requests only when product becomes unavailable due to no fault of Contractor. Requests for review of proposed substitute items will not be accepted from anyone other than

Contractor. The RFS shall state the extent, if any, to which the evaluation and acceptance of the proposed substitute will prejudice Contractor's achievement of Substantial Completion on time, and whether or not acceptance of the substitute for use in the Work will require a change in any of the Contract Documents (or in the provisions of any other direct contract with City for work on the Project).

2. Submit separate RFS (and four copies) for each product and support each request with:

   a. Product identification.

   b. Manufacturer's literature.

   c. Samples, as applicable.

   d. Name and address of similar projects on which product has been used, and dates of installation.

   e. Name, address, and telephone number of manufacturer's representative or sales engineer.

   f. For construction methods: Detailed description of proposed method; drawings illustrating methods.

3. Where required, itemize a comparison of the proposed substitution with product specified and list significant variations including, but not limited to dimensions, weights, service requirements, and functional differences. If variation from product specified is not pointed out in submittal, variation will be rejected even though submittal was favorably reviewed. Identify all variations of the proposed substitute from that specified in the RFS and indicate available maintenance, repair, and replacement service.

4. State whether the substitute will require a change in any of the Contract Documents (or provisions of any other direct contract with City for work on the Project) to adapt the design of the proposed substitute, and whether or not incorporation or use of the substitute in connection with Work is subject to payment of any license fee or royalty. Submit data relating to changes in construction schedule.

5. Include accurate cost data comparing proposed substitution with product and amount of net change in Contract Sum including, but not limited to, an itemized estimate of all costs or credits that will result directly or indirectly from acceptance of such substitute, including costs of redesign and claims of other contractors affected by the resulting change, all of which will be considered by City in evaluating the proposed substitute. City may require Contractor to furnish additional data about the proposed substitute.

6. City will not consider substitutions for acceptance (or, in City's sole discretion, City may make Contractor solely responsible for all resulting costs, expenses and other consequences) when a substitution:

   a. Results in delay meeting construction Milestones or completion dates.

   b. Is indicated or implied on submittals without formal request from Contractor.

   c. Is requested directly by Subcontractor or supplier.

d. Acceptance will require substantial revision of Contract Documents.

e. Disrupts Contractor's job rhythm or ability to perform efficiently.

7. Substitute products shall not be ordered without written acceptance of City.

8. City will determine acceptability of proposed substitutions and reserve right to reject proposals due to insufficient information.

9. Accepted substitutions will be evidenced by a Change Order. All Contract Documents requirements apply to Work involving substitutions.

D. Contractor's Representation and Warranty:

1. Contractor's RFS constitute a representation and warranty that Contractor:

a. Has investigated proposed product and determined that it meets or exceeds, in all respects, specified product.

b. Will provide the same warranty for substitution as for specified product.

c. Will coordinate installation and make other changes that may be required for Work to be complete in all respects.

d. Waives claims for additional costs which may subsequently become apparent.

e. Will compensate City for additional redesign costs associated with substitution.

f. Will be responsible for Construction Schedule slippage due to substitution.

g. Will be responsible for Construction Schedule delay due to late ordering of available specified products caused by requests for substitution that are subsequently rejected by City.

h. Will compensate City for all costs; including extra costs of performing Work under Contract Documents, extra cost to other contractors, and any claims brought against City, caused by late requests for substitutions or late ordering of products.

E. City's Duties:

1. Review Contractor's RFS with reasonable promptness.

2. Notify Contractor in writing of decision to accept or reject requested substitution.

F. Administrative Requirements:

1. Specified products, materials, or systems for Project may include engineering or on-file standards required by the regulatory agency. Contractor's substitution of products, materials or systems may require additional engineering, testing, reviews, approvals, assurances, or other information for compliance with regulatory agency requirements or both. Provide all agency approvals or other additional information required and pay additional costs for required City services made necessary by the substitution at no increase in Contract Sum or Contract Time, and as a part of substitution proposal.

## 1.4 PRODUCT DELIVERY REQUIREMENTS

A. Deliver products in accordance with manufacturer's instructions.

B. Promptly inspect shipments to assure that products comply with requirements, quantities are correct, and products are undamaged.

## 1.5 SHIPPING REQUIREMENTS

A. Preparation for Shipment. All equipment shall be suitably packaged to facilitate handling and to protect against damage during transit and storage. All equipment shall be boxed, crated, or otherwise completely enclosed and protected during shipment, handling, and storage. All equipment shall be protected from exposure to the elements and shall be kept dry at all times.

1. Painted and coated surfaces shall be protected against impact, abrasion, discoloration, and other damage. Painted and coated surfaces which are damaged prior to acceptance of equipment shall be repainted to the satisfaction of City.

2. Grease and lubricating oil shall be applied to all bearings and similar items.

B. Shipping. Before shipping each item of equipment shall be tagged or marked as identified in the delivery schedule or on the Shop Drawings. Complete packing lists and bills of material shall be included with each shipment.

## 1.6 PRODUCT STORAGE AND HANDLING REQUIREMENTS

A. Store products only in staging area per provisions of Section 01100 (Summary).

B. Handle, store, and protect products in accordance with manufacturer's instructions, with seals and labels intact and legible. Store sensitive products in weather-tight, climate-controlled enclosures.

C. For exterior storage of fabricated products, place on appropriate supports, above ground.

D. Cover products subject to deterioration with impervious sheet covering. Provide ventilation to avoid condensation.

E. Store loose granular materials on solid flat surfaces in a well-drained area.

F. Provide equipment and personnel to store products by methods to prevent soiling, disfigurement, or damage.

G. Arrange storage of products to permit access for inspection. Periodically inspect to assure products are undamaged and are maintained under specified conditions.

H. Without limiting the foregoing:

1. Contractor shall bear the responsibility for delivery of equipment, spare parts, special tools, and materials to the Site and shall comply with the requirements specified herein and provide required information concerning the shipment and delivery of the materials specified in Contract Documents. These requirements also apply to any subsuppliers making direct shipments to the Site. Acceptance of the equipment shall be made only after it is installed, tested, placed in operation and found to comply with all the specified requirements.

2. All items shall be checked against packing lists immediately on delivery to the Site for damage and for shortages. Damage and shortages shall be remedied with the minimum of delay.

3. No metalwork (miscellaneous steel shapes and reinforcing steel) shall be stored directly on the ground. Masonry products shall be handled and stored in a manner to hold breakage, chipping, cracking, and spalling to a minimum. Cement, lime, and similar products shall be stored off the ground on pallets and shall be covered and kept completely dry at all times. Pipe fittings and valves may be stored out of doors, but must be placed on wooden blocking. PVC pipe, geo-membranes, plastic liner, and other plastic materials shall be stored off the ground on pallets and protected from direct sunlight.

4. Pumps, motors, electrical equipment, and all equipment with anti-friction or sleeve bearings shall be stored in weather-tight structures maintained at a temperature above 60°F. Electrical equipment, controls, and insulation shall be protected against moisture and water damage. All space heaters furnished in equipment shall be connected and operated continuously.

5. Equipment having moving parts such as gears, bearings, and seals, shall be stored fully lubricated with oil, grease, etc., unless otherwise instructed by the manufacturer. Contractor shall carefully follow manufacturer's storage instructions.

6. When required by the equipment manufacturer, moving parts shall be rotated a minimum of twice a month to ensure proper lubrication and to avoid metal to metal "welding". Upon installation of the equipment, Contractor shall, at the discretion of City, start the equipment at one-half load for an adequate period of time to ensure that the equipment does not deteriorate from lack of use.

7. When required by the equipment manufacturer, lubricant shall be changed upon completion of installation and as frequently as required thereafter during the period between installation and acceptance. Contractor shall put new lubricants into the equipment at the time of acceptance.

8. Equipment and materials shall not show any pitting, rust, decay, or other deleterious effects of storage when installed in the Work.

9. In addition to the protection specified for prolonged storage, the packaging of spare units and spare parts shall be for export packing and shall be suitable for long-term storage in a damp location. Each spare item shall be packed separately and shall be completely identified on the outside of the container.

10. Handling. Stored items shall be laid out to facilitate their retrieval for use in the Work. Care shall be taken when removing the equipment for use to ensure the precise piece of equipment is removed and that it is handled in a manner than does not damage the equipment.

**PART 2 PRODUCTS - NOT USED.**

**PART 3 EXECUTION - NOT USED.**

END OF SECTION

THIS PAGE

INTENTIONALLY

LEFT BLANK

# DOCUMENT 01620

# PRODUCT OPTIONS

## PART 1 GENERAL

### 1.01 SUMMARY

A. Procedures are described for selecting products and requesting substitutions of unlisted materials in lieu of materials named in the specifications or approved for use in Addenda, which were not already the subject of a Document 00660 Substitution Request Form.

B. Related Sections

1. Section 01250: Modification Procedures
2. Section 01330: Submittals

### 1.02 CONTRACTOR'S OPTIONS

A. For products specified only by reference standard: Select any product meeting that standard.

B. For products specified by naming one (1) or more products or manufacturers:

1. Select products of any named manufacturer meeting specifications.

2. If product becomes unavailable due to no fault of Contractor, submit Request for Substitution (RFS).

### 1.03 SUBSTITUTIONS

A. Except as provided in Document 00200 Instructions to Bidders with respect to "or equal" items, City and Engineer will consider Contractor's substitution requests only when product becomes unavailable due to no fault of Contractor. Requests for review of proposed substitute items will not be accepted from anyone other than Contractor. The RFS will state the extent, if any, to which the evaluation and acceptance of the proposed substitute will prejudice Contractor's achievement of substantial completion on time, and whether or not acceptance of the substitute for use in the Work will require a change in any of the Contract Documents (or in the provisions of any other direct contract with City for work on the Project).

B. Submit separate RFS, and four (4) copies, for each product and support each request with:

1. Product identification

2. Manufacturer's literature

3. Samples, as applicable

4. Name and address of similar projects on which product has been used, and dates of installation

5. Name, address and telephone number of manufacturer's representative or sales engineer

6. For construction methods: Detailed description of proposed method; Drawings illustrating methods.

C. Where required, itemize a comparison of the proposed substitution with product specified and list significant variations, including but not limited to dimensions, weights, service requirements, and functional differences. If variation from product specified is not pointed out in submittal, variation will be rejected even though submittal was favorably reviewed.

D. State whether the substitute will require a change in any of the Contract documents (or provisions of any other direct contract with City for work on the Project) to adapt the design of the proposed substitute, and whether or not incorporation or use of the substitute in connection with Work is subject to payment of any license fee or royalty. Submit data relating to changes in construction schedule.

E. All variations of the proposed substitute from that specified will be identified in the RFS and available maintenance, repair and replacement service will be indicated.

F. Include accurate cost data comparing proposed substitution with product and amount of net change in Contract price, including but not limited to, an itemized estimate of all costs or credits that will result directly or indirectly from acceptance of such substitute, including costs of redesign and claims of other contractors effected by the resulting change, all of which will be considered by City in evaluating the proposed substitute. City may require Contractor to furnish additional data about the proposed substitute.

G. City will not consider substitutions for acceptance when:

1. They will result in delay meeting construction milestones or completion dates.

2. They are indicated or implied on submittals without formal request from Contractor.

3. After Bid Opening Date and after Award of Contract, they are requested directly by subcontractor or supplier.

4. Acceptance will require substantial revision of Contract Documents.

5 They disrupt Contractor's job rhythm or ability to perform efficiently.

H. Substitute products shall not be ordered without written acceptance of City.

I. City will determine acceptability of proposed substitutions and reserve right to reject proposals due to insufficient information.

J. Accepted substitutions will be evidenced by a change order. All Contract Documents requirements apply to Work involving substitutions.

## 1.04 CONTRACTOR'S REPRESENTATION AND WARRANTY

A. Requests constitute a representation and warranty that Contractor:

1. Has investigated proposed product and determined that it meets or exceeds, in all respects, specified product
2. Will provide the same warranty for substitution as for specified product
3. Will coordinate installation and make other changes, which may be required for Work to be complete in all respects
4. Waives claims for additional costs, which may subsequently become apparent
5. Will compensate City for additional redesign costs associated with substitution
6. Will be responsible for Construction Schedule slippage due to substitution
7. Will be responsible for Construction Schedule delay due to late ordering of available specified products caused by requests for substitution that is subsequently rejected by City.
8. Will compensate City for all costs; including extra costs of Contract, extra cost to other contractors, and any claims brought against City, caused by late requests for substitutions or late ordering of products.

## 1.05 CITY'S DUTIES

A. Review Contractor's RFS with reasonable promptness.

B. Notify Contractor in writing of decision to accept or reject requested substitution.

## 1.06 ADMINISTRATIVE REQUIREMENTS

Specified products, materials, or systems for Project may include engineering or on-file standards required by the Regulatory Agency. Contractor's substitution of products, materials or systems may require either additional engineering, testing, reviews, approvals, assurances, or other information for compliance with Regulatory Agency requirements or both. Contractor shall provide all agency approvals or other additional information required and pay additional costs for required City or Architect's services made necessary by the substitution at no increase in Contract Sum or schedule time, and as a part of substitution proposal.

# PART 2 PRODUCTS

Not applicable to this section.

# PART 3 EXECUTION

Not applicable to this section.

END OF SECTION

THIS PAGE

INTENTIONALLY

LEFT BLANK

# DOCUMENT 01715
# EXISTING UNDERGROUND FACILITIES

## PART 1 GENERAL

### 1.1 PUBLIC FACILITIES AFFECTED

A. Where overhead service to a structure, known to receive service, does not exist, then underground service shall be assumed to exist.

B. Contractor's attention is directed to the existence of underground sewer, water, gas, power, telephone, and cable lines and other utilities within the areas in which Work is to be performed. Contractor shall, at least 2 Business Days, or as otherwise noted, prior to commencement of excavation, notify Underground Service Alert (USA North) at 1-800-227-2600 or 811.

### 1.2 PRIVATE FACILITIES AFFECTED

No attempt has been made to locate private utilities on private property such as sprinkler irrigation systems or electrical conduits. Contact the property owners prior to construction.

## PART 2 PRODUCTS - NOT USED

## PART 3 EXECUTION - NOT USED

END OF SECTION

THIS PAGE

INTENTIONALLY

LEFT BLANK

# DOCUMENT 01731

# CUTTING AND PATCHING

## PART 1 - GENERAL

### 1.1 RELATED DOCUMENTS

A. Drawings and general provisions of the Contract, including General and Supplementary Conditions and other Division 1 Specification Sections, apply to this Section.

### 1.2 SUMMARY

A. This Section includes procedural requirements for cutting and patching.

B. Related Sections include the following:

1. Divisions 2 through 16 Sections for specific requirements and limitations applicable to cutting and patching individual parts of the Work.

   a. Requirements in this Section apply to mechanical and electrical installations. Refer to Divisions 15 and 16 Sections for other requirements and limitations applicable to cutting and patching mechanical and electrical installations.

### 1.3 DEFINITIONS

A. Cutting: Removal of existing construction necessary to permit installation or performance of other Work.

B. Patching: Fitting and repair work required to restore surfaces to original conditions after installation of other Work.

### 1.4 SUBMITTALS

A. Cutting and Patching Proposal: Submit a proposal describing procedures at least 10 days before the time cutting and patching will be performed, requesting approval to proceed. Include the following information:

1. Extent: Describe cutting and patching, show how they will be performed, and indicate why they cannot be avoided.
2. Changes to Existing Construction: Describe anticipated results. Include changes to structural elements and operating components as well as changes in building's appearance and other significant visual elements.
3. Products: List products to be used and firms or entities that will perform the Work.

4. Dates: Indicate when cutting and patching will be performed.

5. Utilities: List utilities that cutting and patching procedures will disturb or affect. List utilities that will be relocated and those that will be temporarily out of service. Indicate how long service will be disrupted.

6. Structural Elements: Where cutting and patching involve adding reinforcement to structural elements, submit details and engineering calculations showing integration of reinforcement with original structure.

7. City Approval: Obtain approval of cutting and patching proposal before cutting and patching. Approval does not waive right to later require removal and replacement of unsatisfactory work.

## 1.5 QUALITY ASSURANCE

A. Structural Elements: Do not cut and patch structural elements in a manner that could change their load-carrying capacity or load-deflection ratio.

1. Cutting and patching of structural members shall be performed only by structural steel erector.

B. Operational Elements: Do not cut and patch operating elements and related components in a manner that results in reducing their capacity to perform as intended or that results in increased maintenance or decreased operational life or safety.

1. Primary operational systems and equipment.
2. Air or smoke barriers.
3. Fire-protection systems.
4. Control systems.
5. Communication systems.
6. Conveying systems.
7. Electrical wiring systems.
8. Operating systems of special construction in Division 13 Sections.

C. Miscellaneous Elements: Do not cut and patch the following elements or related components in a manner that could change their load-carrying capacity, that results in reducing their capacity to perform as intended, or that results in increased maintenance or decreased operational life or safety.

1. Water, moisture, or vapor barriers.
2. Membranes and flashings.
3. Exterior curtain-wall construction.
4. Equipment supports.
5. Piping, ductwork, vessels, and equipment.
6. Noise- and vibration-control elements and systems.

D. Visual Requirements: Do not cut and patch construction in a manner that results in visual evidence of cutting and patching. Do not cut and patch construction exposed on the exterior or in occupied spaces in a manner that would, in Architect's opinion, reduce the building's aesthetic qualities. Remove and replace construction that has been cut and patched in a visually unsatisfactory manner.

1. If possible, retain original Installer or fabricator to cut and patch exposed Work listed below. If it is impossible to engage original Installer or fabricator, engage another recognized, experienced, and specialized firm.

    a. Processed concrete finishes.
    b. Ornamental metal.
    c. Matched-veneer woodwork.
    d. Preformed metal panels.
    e. Firestopping.
    f. Stucco and ornamental plaster.
    g. Aggregate wall coating.
    h. Wall covering.
    i. HVAC enclosures, cabinets, or covers.

E. Cutting and Patching Conference: Before proceeding, meet at Project site with parties involved in cutting and patching. Review areas of potential interference and conflict. Coordinate procedures and resolve potential conflicts before proceeding.

1.6 WARRANTY

A. Existing Warranties: Remove, replace, patch, and repair materials and surfaces cut or damaged during cutting and patching operations, by methods and with materials so as not to void existing warranties.

PART 2 - PRODUCTS

2.1 MATERIALS

A. General: Comply with requirements specified in other Sections of these Specifications.

B. Existing Materials: Use materials identical to existing materials. For exposed surfaces, use materials that visually match existing adjacent surfaces to the fullest extent possible.

    1. If identical materials are unavailable or cannot be used, use materials that, when installed, will match the visual and functional performance of existing materials.

PART 3 - EXECUTION

3.1 EXAMINATION

A. Examine surfaces to be cut and patched and conditions under which cutting and patching are to be performed.

    1. Compatibility: Before patching, verify compatibility with and suitability of substrates, including compatibility with existing finishes or primers.

    2. Proceed with installation only after unsafe or unsatisfactory conditions have been corrected.

## 3.2 PREPARATION

A. Temporary Support: Provide temporary support of Work to be cut.

B. Protection: Protect existing construction during cutting and patching to prevent damage. Provide protection from adverse weather conditions for portions of Project that might be exposed during cutting and patching operations.

C. Adjoining Areas: Avoid interference with use of adjoining areas or interruption of free passage to adjoining areas.

D. Existing Services: Where existing services are required to be removed, relocated, or abandoned, bypass such services before cutting to minimize interruption of services to occupied areas.

## 3.3 PERFORMANCE

A. General: Employ skilled workers to perform cutting and patching. Proceed with cutting and patching at the earliest feasible time, and complete without delay.

1. Cut existing construction to provide for installation of other components or performance of other construction, and subsequently patch as required to restore surfaces to their original condition.

B. Cutting: Cut existing construction by sawing, drilling, breaking, chipping, grinding, and similar operations, including excavation, using methods least likely to damage elements retained or adjoining construction. If possible, review proposed procedures with original Installer; comply with original Installer's written recommendations.

1. In general, use hand or small power tools designed for sawing and grinding, not hammering and chopping. Cut holes and slots as small as possible, neatly to size required, and with minimum disturbance of adjacent surfaces. Temporarily cover openings when not in use.
2. Existing Finished Surfaces: Cut or drill from the exposed or finished side into concealed surfaces.
3. Concrete, Masonry: Cut using a cutting machine, such as an abrasive saw or a diamond-core drill.
4. Excavating and Backfilling: Comply with requirements in applicable Division 2 Sections where required by cutting and patching operations.
5. Mechanical and Electrical Services: Cut off pipe or conduit in walls or partitions to be removed. Cap, valve, or plug and seal remaining portion of pipe or conduit to prevent entrance of moisture or other foreign matter after cutting.
6. Proceed with patching after construction operations requiring cutting are complete.

C. Patching: Patch construction by filling, repairing, refinishing, closing up, and similar operations following performance of other Work. Patch with durable seams that are as

invisible as possible. Provide materials and comply with installation requirements specified in other Sections of these Specifications.

1. Inspection: Where feasible, test and inspect patched areas after completion to demonstrate integrity of installation.
2. Exposed Finishes: Restore exposed finishes of patched areas and extend finish restoration into retained adjoining construction in a manner that will eliminate evidence of patching and refinishing.
3. Floors and Walls: Where walls or partitions that are removed extend one finished area into another, patch and repair floor and wall surfaces in the new space. Provide an even surface of uniform finish, color, texture, and appearance. Remove existing floor and wall coverings and replace with new materials, if necessary, to achieve uniform color and appearance.
   a. Where patching occurs in a painted surface, apply primer and intermediate paint coats over the patch and apply final paint coat over entire unbroken surface containing the patch. Provide additional coats until patch blends with adjacent surfaces.
4. Ceilings: Patch, repair, or rehang existing ceilings as necessary to provide an even-plane surface of uniform appearance.
5. Exterior Building Enclosure: Patch components in a manner that restores enclosure to a weathertight condition.

END OF SECTION

THIS PAGE

INTENTIONALLY

LEFT BLANK

# DOCUMENT 01740
# CLEANING

## PART 1 GENERAL

### 1.1 PROGRESS CLEANING

A. Contractor shall perform periodic cleaning to ensure that any streets and other City and public properties are maintained free from accumulation of waste materials, dust, mud, and debris.

B. Where required, Contractor shall wet down surfaces to lay dust and prevent the blowing of dust to nearby residences or public properties.

C. Contractor shall keep all streets clean and free of dust, mud, and debris resulting from Contractor's operations. Daily cleanup throughout the job will be necessary as Contractor progresses with its Work, but extra attention to cleanup shall be made prior to weekends and holidays. Without limiting the foregoing, Contractor shall remove trench spoil along traveled ways daily; grade and vacuum broom surfaces initially where applicable and later water flush with high-pressure sprays, being careful to avoid downstream contamination.

D. All dust, mud, spoils, and construction debris shall be removed daily from all roadways, ditches, shoulders, and private property (fills or spoils placed on private property at private property owner's written request excepted).

E. Disposal of Materials:

1. As part of the scope of Work included within the Contract Sum, Contractor shall be fully responsible for disposing of all construction debris, dirt and spoils resulting from the Work.

2. All waste materials, debris, dirt and rubbish shall be disposed of at sites to be chosen by Contractor in accordance with applicable local, state, and federal regulations.

3. Contractor is cautioned that the County of Santa Clara and cities within the county have regulations governing the disposal of rubble, broken pavement, and similar materials.

4. Contractor shall become familiarized with the requirements of the agency having jurisdiction over any contemplated disposal site and shall comply with all such requirements.

F. All excess soil from performance of Work shall be disposed at sites to be chosen by Contractor in accordance with applicable local, state, and federal regulations. If Contractor elects to dispose of soil on any private property, prior to any dumping, a letter allowing such dumping shall be obtained from the property owner and presented to City. Contractor is advised that the property owner is required to obtain a fill permit from the applicable government agency(ies). In addition, placement of fill in wetland areas is subject to permit procedures of the US Army Corps of Engineers.

At the completion of Work, a letter from each affected property owner will be required releasing Contractor, Santa Clara County, City and any City consultant from future liability.

G. If Contractor does not properly clean the Site, in the opinion of City, then City shall have the option of using outside equipment to perform the cleanup and such cost will be withheld from the Contract Sum.

1.2 FINAL CLEANING

A. Contractor shall execute final cleaning prior to final inspection, using only properly skilled workers.

B. Remove grease, dust, dirt, stains, labels, fingerprints, and other foreign materials from exposed interior and exterior finished surfaces.

C. Repair, patch, and touch up marred surfaces to match adjacent finishes.

D. Clean interior and exterior surfaces exposed to view; remove temporary labels, stains and foreign substances, polish transparent and glossy surfaces, vacuum carpeted and soft surfaces.

E. Clean equipment and fixtures to a sanitary condition, clean or replace filters of mechanical equipment operated during construction, clean ducts, blowers and coils of units operated without filters during construction.

F. Clean Site; mechanically sweep paved areas.

G. Remove waste and surplus materials, rubbish, and construction facilities from Site.

PART 2 PRODUCTS – NOT USED

PART 3 EXECUTION – NOT USED

END OF SECTION

# DOCUMENT 01770

# CONTRACT CLOSEOUT

## PART 1 GENERAL

### 1.01 SUMMARY

This section describes contract closeout procedures including:

1. Removal of temporary construction facilities
2. Substantial Completion
3. Final Completion
4. Final Cleaning
5. Project record documents
6. Material, equipment and Finish Data
7. Miscellaneous Project Record Submittals
8. Project Guarantee
9. Warranties
10. Turn-In
11. Release of Claims
12. Fire Inspection Coordination
13. Building Inspection Coordination
14. Liquidated Damages

### 1.02 REMOVAL OF TEMPORARY CONSTRUCTION FACILITIES

A. Remove temporary materials, equipment, services, and construction prior to Substantial Completion Inspection.

B. Clean and repair damage caused by installation or use of temporary facilities.

C. Restore permanent facilities used during construction to specified condition.

D. Comply with paragraph 1.12 of Section 1500 (Temporary Facilities and Controls).

### 1.03 SUBSTANTIAL COMPLETION

A. When Contractor considers Work or designated portion of the Work as substantially complete, Contractor shall submit written notice to City, with list of items to be completed or corrected. The term "Substantial Completion" is defined in Section 01420 References and Definitions.

B. Within reasonable time City will inspect to determine status of completion.

C. Should City determine that Work is not substantially complete, City will promptly notify Contractor in writing, listing all defects and omissions.

D. Contractor shall remedy deficiencies and send a second written notice of substantial completion to the City. Upon receipt of proper notice the City will re-inspect the Work. If deficiencies previously noted are not corrected on reinspection, then Contractor shall pay the cost of the reinspection.

E. When City concurs that Work is substantially complete, City will issue a Certificate of Substantial Completion, accompanied by Contractor's list of items to be complete or corrected as verified by City and Architect.

F. Manufactured units, equipment and systems that require startup must have been started up and run for periods prescribed by City, all associated training completed and all spare parts and O & M manuals turned over to the City before a Certificate of Substantial Completion will be issued. The term "Substantial Completion" is defined in Section 01420 References and Definitions. A punch list examination will be performed upon Substantial Completion. One follow-up review of punch list items for each discipline will be provided. If further Site visits are required to review punch list items due to incompleteness of the work by Contractor, Contractor through City will reimburse these visits.

A punch list examination will be performed upon Substantial Completion. One follow-up review of punch list items for each discipline will be provided. If further Site visits are required to review punch list items due to incompleteness of the Work by Contractor, Contractor will reimburse City for costs associated with these visits

1.04 FINAL COMPLETION

A. Final Completion is defined in Section 01420 References and Definitions. Final Completion occurs when Work meets requirements for City's Final Acceptance. When Contractor considers Work is finally complete, submit written certification that:

1. Contractor has inspected Work for compliance with Contract Documents, and all requirements for Final Acceptance have been met.

2. Except for Contractor maintenance after Final Acceptance, Work has been completed in accordance with Contract Documents and deficiencies listed with Certificate of Substantial Completion have been corrected. Equipment and systems have been tested in the presence of City's representative, and are operative. All user manuals and warranties have been submitted and accepted by the City.

3. Work is complete and ready for final inspection.

B. In addition to submittals required by conditions of Contract, Contractor shall provide submittals required by governing authorities and submit final statement of accounting giving total adjusted Contract Sum, previous payments, and sum remaining due.

C. When City finds Work is acceptable and final submittal is complete, City will issue final change order reflecting approved adjustments to Contract Sum not previously made by Change Order. Should Architect or City determine that Work is incomplete or defective:

a. City promptly will so notify Contractor, in writing, listing the incomplete or defective items.

b. Contractor shall promptly remedy the deficiencies and notify the City when it is ready for reinspection.

c. When Architect and City determine that the Work is acceptable under the Contract Documents, City will request Contractor to make closeout submittals.

D. Final adjustments of accounts:

1. Contractor shall submit a final statement of accounting to City, showing all adjustments to the Contract Sum and complete and execute Document 00650 Agreement and Release of Any and All Claims.

2. If so required, City shall prepare a final Change Order for submittal to Contractor, showing adjustment to the Contract Sum that were not previously made into a Contract Modification.

1.05 FINAL CLEANING

A. Execute final cleaning prior to final inspection.

B. Clean surfaces as required to comply with building codes and regulations.

C. Restore staging areas to original condition.

D. Remove waste and surplus materials, rubbish, and construction facilities from Site.

1.06 MATERIAL, EQUIPMENT AND FINISH DATA

Contractor shall submit two (2) sets of data for primary materials, equipment and finishes as required under each specification section prior to final inspection, bound in 8-1/2 inches by 11 inches three-ring binders with durable plastic covers to City for City's records.

1.07 MISCELLANEOUS PROJECT RECORD SUBMITTALS

Refer to other Specification Sections for miscellaneous record keeping requirements and submittals in connection with various construction activities. Immediately prior to Substantial Completion, complete miscellaneous records and place in good order, properly identified and bound or filed, ready for use and reference. Submit to City for City's records.

## 1.08 PROJECT GUARANTEE

A. Requirements for Contractor's guarantee of completed Work are included in Document 00700 General Conditions, Paragraph 9. Contractor shall guarantee Work done under Contract against failures, leaks or breaks or other unsatisfactory conditions due to defective equipment, materials or workmanship, and perform repair work or replacement required, at Contractor's sole expense, for period of two (2) years from date of Final Acceptance.

B. Neither recordation of final acceptance nor final certificate for payment nor provision of the Contract nor partial or entire use or occupancy of premises by City shall constitute acceptance of Work not done in accordance with Contract Documents nor relieve Contractor of liability in respect to express warranties or responsibility for faulty materials or workmanship.

C. City may make repairs to defective Work as set forth in paragraph 1.09.C of Document 00700 General Conditions, if, within five (5) working days after mailing of written notice of defective work to Contractor or authorized agent, Contractor shall neglect to make or undertake repair with due diligence; provided, however, that in case of leak or emergency where, in opinion of City, delay would cause hazard to health or serious loss or damage, repairs may be made without notice being sent to Contractor, and Contractor shall pay cost thereof.

D. If, after installation, operation or use of materials or equipment to be furnished under Contract proves to be unsatisfactory to City, City shall have right to operate and use materials or equipment until it can, without damage to City, be taken out of service for correction or replacement. Period of use of defective materials or equipment pending correction or replacement shall in no way decrease guarantee period required for acceptable corrected or replaced items of materials or equipment.

E. Nothing in this Section shall be construed to limit, relieve or release Contractor's, subcontractors' and equipment suppliers' liability to City for damages sustained as result of latent defects in equipment caused by negligence of suppliers' agents, employees or subcontractors. Stated in another manner, warranty contained in the Contract Documents shall not amount to, nor shall it be deemed to be, waiver by City of any rights or remedies (or time limits in which to enforce such rights or remedies) it may have for defective workmanship or defective materials under laws of this State pertaining to acts of negligence.

## 1.09 WARRANTIES

A. Execute Contractor's submittals and assemble warranty documents, and operations and maintenance manuals, executed or supplied by subcontractors, suppliers, and manufacturers.

1. Provide table of contents and assemble in 8-1/2 inches by 11 inches three-ring binder with durable plastic cover, appropriately separated and organized.

2. Include contact names and phone numbers for City personnel to call during warranty period.

3. Assemble in Specification Section order.

B. Submit material prior to final application for payment.

1. For equipment put into use with City's permission during construction, submit within ten (10) working days after first operation.

2. For items of Work delayed materially beyond Date of Substantial Completion, provide updated submittal within ten (10) working days after acceptance, listing date of acceptance as start of warranty period.

C. Warranties are intended to protect City against failure of work and against deficient, defective and faulty materials and workmanship, regardless of sources.

D. Limitations: Warranties are not intended to cover failures that result from the following:

1. Unusual or abnormal phenomena of the elements
2. Vandalism after substantial completion
3. Insurrection or acts of aggression including war

E. Related Damages and Losses: Remove and replace Work which is damaged as result of defective Work, or which must be removed and replaced to provide access for correction of warranted Work.

F. Warranty Reinstatement: After correction of warranted Work, reinstate warranty for corrected Work to date of original warranty expiration or to a date not less than 730 days after corrected Work was done, whichever is later.

G. Replacement Cost: Replace or restore failing warranted items without regard to anticipated useful service lives.

H. Warranty Forms: Submit drafts to City for approval prior to execution. Forms shall not detract from or confuse requirements or interpretations of Contract Documents.

1. Warranty shall be countersigned by manufacturers.

2. Where specified, warranty shall be countersigned by subcontractors and installers.

I. Rejection of Warranties: City reserves right to reject unsolicited and coincidental product warranties that detract from or confuse requirements or interpretations of Contract Documents.

J. Term of Warranties: For materials, equipment, systems and workmanship warranty period shall be two (2) years minimum from date of final completion of entire Work except where:

1. Detailed specifications for certain materials, equipment or systems require longer warranty periods.

2. Materials, equipment or systems are put into beneficial use of City prior to Final Completion as agreed to in writing by City.

K. Warranty of Title: No material, supplies, or equipment for Work under Contract shall be purchased subject to any chattel mortgage, security agreement, or under a conditional sale or other agreement by which an interest therein or any part thereof is retained by seller or supplier. Contractor warrants good title to all material, supplies, and equipment installed or incorporated in Work and agrees upon completion of all work to deliver premises, together with improvements and appurtenances constructed or placed thereon by Contractor, to City free from any claim, liens, security interest, or charges, and further agrees that neither Contractor nor any person, firm, or corporation furnishing any materials or labor for any Work covered by Contract shall have right to lien upon premises or improvement or appurtenances thereon. Nothing contained in this Paragraph, however, shall defeat or impair right of persons furnishing materials or labor under bond given by Contractor for their protection or any rights under law permitting persons to look to funds due Contractor in hands of City.

1.10 TURN-IN

Contract Documents will not be closed out and final payment will not be made until all personnel Identification Media, vehicle permits and keys issued to Contractor during prosecution of Work are turned in to City.

1.11 RELEASE OF CLAIMS

Contract Documents will not be closed out and final payment will not be made until Document 00650 Agreement and Release of Any and All Claims, is completed and executed by Contractor and City.

1.12 FIRE INSPECTION COORDINATION

Contractor shall coordinate fire inspection and secure sufficient notice to City to permit convenient scheduling.

1.13 BUILDING INSPECTION COORDINATION

Contractor shall coordinate with City inspectors as required.

1.14 LIQUIDATED DAMAGES

If assessment of Liquidated damages as provided by Contract Documents occurs during the project, such assessment shall stop at the date the Contractor achieves Substantial Completion. Contractor shall then have a period of **30** calendar days to complete all activities to achieve Final Completion. If Final Completion is not achieved in this period, Liquidated Damages will resume at the daily rates in Document 00520 until such time as Final Completion is achieved by the Contractor

PART 2 PRODUCTS

Not applicable to this section.

PART 3 EXECUTION

Not applicable to this section.

**END OF SECTION**

THIS PAGE

INTENTIONALLY

LEFT BLANK

# DOCUMENT 01780

# PROJECT RECORD DOCUMENTS

## PART 1 GENERAL

### 1.01 SUMMARY

A. This section specifies administrative and procedural requirements for Project Record Documents.

B. Project Record Documents required include:

1. Marked-up copies of Contract Plans
2. Marked-up copies of Shop Drawings
3. Newly prepared Drawings
4. Marked-up copies of Specifications, Addenda, Change Orders and other Contract Modifications
5. Marked-up Project Data submittals
6. Record Samples
7. Field records for variable and concealed conditions
8. Record information on Work that is recorded only schematically

C. Specific Project Record Documents requirements that expand requirements of this Section are included in the individual Sections of the Specifications.

D. General Project closeout requirements are included in Section 01770 "Contract Closeout".

E. Maintenance of Documents and Samples:

1. Store Project Record Documents and samples in the field office apart from Contract Documents used for construction.

2. Do not permit Project Record Documents to be used for construction purposes.

3. Maintain Project Record Documents in good order, and in a clean, dry, legible condition.

4. Make documents and samples available at all times for inspection by Architect and City.

F. City will provide one blueline set of the construction drawings and one project manual for Contractor's use for recording as-built conditions.

### 1.02 PROJECT RECORD DRAWINGS

A. Mark-up Procedure: During the construction period, maintain a set of blueline or blackline prints of Contract Plans and Shop Drawings for Project Record Document purposes. Label each document (on first sheet or page) "PROJECT RECORD" in 2

in. high printed letters. Keep record documents current. Note: A reference by number to a Change Order, Construction Change Directive, RFI, RFQ, Field Instructions or other such document is not acceptable as sufficient record information on any record document. Do not permanently conceal any Work until required information has been recorded.

1. Mark these Drawings to indicate the actual installation where the installation varies appreciably from the installation shown originally. Give particular attention to information on concealed elements that would be difficult to identify or measure and record later. Items required to be marked include but are not limited to:

    a. Dimensional changes to the Drawings
    b. Revisions to details shown on the Drawings
    c. Depths of various elements of foundation in relation to main floor level or survey datum.
    d. Horizontal and vertical location of underground utilities and appurtenances referenced to permanent surface improvements.
    e. Location of internal utilities and appurtenances concealed in construction referenced to visible and accessible features of structure.
    f. Establish locations of underground work, points of connection with existing utilities, changes in direction, valves, manholes, catch basins, capped stubouts, invert elevations, and similar items.
    g. Provide actual numbering of each electrical circuit.
    h. Field changes of dimension and detail.
    i. Revisions to routing of piping and conduits
    j. Revisions to electrical circuitry
    k. Actual equipment locations
    l. Duct size and routing
    m. Changes made by Change Order , Construction Change Directive or Field Instruction
    n. Details not on original Contract Plans

2. Mark completely and accurately Project Record Drawing prints of Contract Plans or Shop Drawings, whichever is the most capable of showing actual physical conditions. Where Shop Drawings are marked, show cross-reference on Contract Plans location.

3. Mark Project Record Drawing sets with red erasable colored pencil; use other colors to distinguish between changes for different categories of the Work at the same location.

4. Mark important additional information that was either shown schematically or omitted from original Drawings.

5. Note Construction Change Directive numbers; Field Instruction numbers; alternate numbers; Change Order numbers and similar identification.

6. Responsibility for Mark-up: Where feasible, the individual or entity who obtained Project Record Drawing data, whether the individual or entity is the installer, subcontractor, or similar entity, is required to prepare the mark-up on Project Record Drawings.

a. Accurately record information in an understandable and legible drawing technique.

b. Record data as soon as possible after it has been obtained. In the case of concealed installations, record and check the mark-up prior to concealment.

B. Preparation of Record Drawings: Immediately prior to inspection for Certification of Substantial Completion, review completed marked-up Project Record Drawings with City and Architect. These drawings shall be submitted to MTH Engineers to prepare a full set of AutoCAD plots of the Contract Plans and Shop Drawings.

1. Incorporate changes and additional information previously marked on print sets. Erase, redraw, and add details and notations where applicable. Identify and date each Drawing; include the printed designation "PROJECT RECORD DRAWINGS" in a prominent location on each Drawing.

2. Refer instances of uncertainty to City for resolution.

3. Distribution: Whether or not changes and additional information were recorded, organize and bind original marked-up set of prints that were maintained during the construction period into manageable sets. Bind the set with durable paper cover sheets, with appropriate identification, including titles, dates and other information on cover sheets.

C. Distribution of Marked-Up Drawings

Submit the marked-up Project Record Drawings set to City for City's records.

D. Shop Drawings and Samples: Maintain as record documents; legibly annotate Shop Drawings and Samples to record changes made after review.

E. In addition to requirements of this Section, comply with supplemental requirements of Divisions 15 and 16.

F. Divisions 15 and 16 of the Specifications require the preparation of large scale, detailed layout drawings of the Work of those Divisions. These layout drawings are not Shop Drawings as defined by Document 00700 (General Conditions), but together with Shop Drawings or layout drawings of all other affected Sections are used to check, coordinate, and integrate the work of the various Sections.

Include these layout drawings as part of the Project Record Documents.

1.03 PROJECT RECORD SPECIFICATIONS

During the construction period, maintain one copy of the Project Specifications, including addenda and modifications issued, for Project Record Document purposes.

A. Mark the Project Record Specifications to indicate the actual installation where the installation varies substantially from that indicated in Specifications and Modifications issued. Note related Project Record Drawing information, where applicable. Give particular attention to substitutions, selection of product options, Change Order, Construction Change Directive and Field Instruction work, and information on concealed installation that would be difficult to identify or measure and record later.

1. In each Specification Section where products, materials or units of equipment are specified or scheduled, mark the copy with the proprietary name and model number of the product furnished.

2. Record the name of the manufacturer, catalog number, supplier and installer, and other information necessary to provide a record of selections made and to document coordination with Project Record Product Data submittals and maintenance manuals.

3. Note related Project Record Product Data, where applicable, for each principal product specified, indicate whether Project Record Product Data has been submitted in maintenance manual instead of submitted as Project Record Product Data.

4. Upon completion of mark-up, submit Project Record Specifications to City for City's records.

1.04 ADDITIONAL REQUIREMENTS FOR FINAL PROJECT RECORD DOCUMENTS

A. Prior to Substantial Completion of the Work, Architect will make available to Contractor originals of the Drawings and Specifications, as AutoCAD 2004 files, erasable vellums of hand-drawn drawings, and word processing files. Contractor shall note all changes thereon for the final Project Record Documents and provide one (1) set of mylar reproducibles, one (1) set of revised specifications and one (1) set of disks or CDs to be submitted to City. Subsequent work is highly dependent on the accuracy of the as-built site conditions, including the actual rough grade elevations. Contractor shall take particular care to provide complete and accurate as-built information on AutoCAD Release 14 files of the rough grade elevations for the City's use for subsequent work.

B. After Substantial Completion and before Final Completion, Contractor shall carefully transfer all data shown on the job set of Record Drawings to the corresponding computer files, and vellums, coordinating the information as required.

C. Contractor shall clearly indicate at each affected detail and other drawings a full description of changes made during construction, and the actual location of items as previously specified.

D. Contractor shall "cloud" all affected areas.

E. Contractor shall stamp each record drawing with the following information:

1. Project Record Document.
2. Prepared by: Contractor's name, permanent address.
3. Date prepared:
4. Contractor's signature.
5. City Project number.

1.05 PROJECT RECORD PRODUCT DATA

A. During the construction period, maintain one copy of each Project Record Product Data submittal for Project Record Document purposes.

1. Mark Project Record Product Data to indicate the actual product installation where the installation varies substantially from that indicated in Project Record Product Data submitted. Include significant changes in the product delivered to the site, and changes in manufacturer's instructions and recommendations for installation.

2. Give particular attention to information on concealed products and installations that cannot be readily identified and recorded later.

3. Note related Change Orders and mark-up of Project Record Drawings, where applicable.

4. Upon completion of mark-up, submit a complete set of Project Record Product Data to City for City's records.

5. Where Project Record Product Data is required as part of maintenance manuals, submit marked-up Project Record Product Data as an insert in the manual, instead of submittal as Project Record Product Data.

6. The prime Contractor is responsible for mark-up and submittal of record Project Record Product Data for its own Work.

B. MATERIAL, EQUIPMENT AND FINISH DATA

1. Provide data for primary materials, equipment and finishes as required under each specification section.

2. Submit two (2) sets prior to final inspection, bound in 8-1/2 inches by 11 inches three-ring binders with durable plastic covers; provide typewritten table of contents for each volume.

3. Arrange by Specification division and give names, addresses, and telephone numbers of subcontractors and suppliers. List:

   a. Trade names.
   b. Model or type numbers.
   c. Assembly diagrams.
   d. Operating instructions.
   e. Cleaning instructions.
   f. Maintenance instructions.
   g. Recommended spare parts.
   h. Product data.

1.06 MISCELLANEOUS PROJECT RECORD SUBMITTALS

Refer to other Specification Sections for miscellaneous record keeping requirements and submittals in connection with various construction activities. Immediately prior to Substantial Completion, complete miscellaneous records and place in good order, properly identified and bound or filed, ready for use and reference. Submit to the City for City's records. Categories of requirements resulting in miscellaneous records include, but are not limited to the following:

a. Field records on excavations and foundations

b. Field records on underground construction and similar work
c. Survey showing locations and elevations of underground lines
d. Invert elevations of drainage piping
e. Surveys establishing building lines and levels
f. Authorized measurements utilizing unit prices or allowances
g. Records of plant treatment
h. Ambient and substrate condition tests
i. Certifications received in lieu of labels on bulk products
j. Batch mixing and bulk delivery records
k. Testing and qualification of tradespersons
l. Documented qualification of installation firms
m. Load and performance testing
n. Inspections and certifications by governing authorities
o. Leakage and water-penetration tests
p. Fire resistance and flame spread test results
q. Final inspection and correction procedures

## PART 2 PRODUCTS

Not applicable to this section.

## PART 3 EXECUTION

### 3.01 RECORDING

Post changes and modifications to the Documents as they occur. Do not wait until the end of the Project. City and/or Architect may periodically review Project Record Documents to assure compliance with this requirement.

### 3.02 SUBMITTAL

A. At completion of Project, deliver record documents to City.

B. Accompany submittal with transmittal letter containing:

Date

Project title and number

Contractor's name and address

Number and title of each record documents

Certification that each document as submitted is complete and accurate, and signature of.

Contractor, or Contractor's authorized representative

**END OF SECTION**

SECTION 02585

# UTILITY POLES

## PART 1 - GENERAL

### 1.1 SUMMARY

A. Section Includes:
   1. Wood poles.
   2. Crossarms.
   3. Pole hardware.

B. Related Sections:
   1. Section 02590 - Site Grounding: Execution requirements for grounding components specified in the section.
   2. Section 16311 - Line Materials.

### 1.2 REFERENCES

A. American National Standards Institute:
   1. ANSI C135.4 - Zinc-Coated Ferrous Eyebolts and Nuts for Overhead Line Construction.
   2. ANSI C135.5 - Zinc-Coated Ferrous Eyenuts and Eyebolts for Overhead Line Construction.
   3. ANSI C135.6 - Zinc-Coated Ferrous Crossarm Braces for Overhead Line Construction.
   4. ANSI O5.1 - Wood Poles, Specifications and Dimensions.

B. ASTM International:
   1. ASTM A475 - Standard Specification for Zinc-Coated Steel Wire Strand.
   2. ASTM A675/A675M - Standard Specification for Steel Bars, Carbon, Hot-Wrought, Special Quality, Mechanical Properties.

C. American Wood-Preservers' Association:
   1. AWPA C4 - Poles - Preservative Treatment by Pressure Processes.
   2. AWPA C25 - Sawn Crossarms - Preservative Treatment by Pressure Processes.

D. Institute of Electrical and Electronics Engineers:
   1. IEEE C2 - National Electrical Safety Code.
   2. IEEE C135.1 - Standard for Zinc-Coated Steel Bolts and Nuts for Overhead Line Construction.
   3. IEEE C135.2 - Standard for Threaded Zinc-Coated Ferrous Strand-Eye Anchor Rods and Nuts for Overhead Line Construction.

E. Silicon Valley Power:
   1. Material Specification No. 6 – Wood Poles.

1.3 SUBMITTALS

A. Section 01330 - Submittal Procedures: Requirements for submittals.

B. Product Data: Submit data showing materials and construction of poles, crossarms and related pole hardware.

1.4 CLOSEOUT SUBMITTALS

A. Section 01780 – Project Record Documents: Project Record Product Data.

B. Project Record Documents: Record actual locations of poles, guys, anchors, and required horizontal and vertical clearances.

C. Operation and Maintenance Data: Submittals for Project Closeout.

1.5 QUALITY ASSURANCE

A. Perform Work in accordance with CPUC General Order 95, light loading conditions, and Grade A construction.

1.6 PRE-CONSTRUCTION MEETINGS

A. Section 01315 – Project Meetings: Preconstruction Conference.

1.7 DELIVERY, STORAGE, AND HANDLING

A. Section 01600 - Product Requirements: Requirements for transporting, handling, storing, and protecting products.

B. Protect poles from damage and decay by stacking to allow free circulation of air. Maintain one (1) foot minimum spacing between bottom pole and ground or ground vegetation. Do not store poles above decayed or decaying wood.

C. Stack poles stored for more than two (2) weeks on creosoted or decay-resistant skids arranged to support poles without noticeable pole distortion.

D. Handle treated poles with tools to not produce indentations greater than one (1) inch deep. Do not drag treated poles along ground. Do not apply tools to section of treated poles between one (1) foot above and two (2) feet below ground line.

PART 2 - PRODUCTS

2.1 POLES

A. Wood Poles: ANSI O5.1, treated Pacific Coast Douglas fir poles of minimum length and class indicated in project drawings. Poles must meet or exceed SVP Material Specification No. 6.

B. Select poles for straightness and minimum sweeps and short crooks.

C. Preservative: Copper Naphthenate meeting the requirements of AWPA P8.

D. Apply preservative to AWPA C1 and C4 with minimum net retention of 1 pound per cubic foot. Obtain complete sapwood penetration.

2.2 CROSSARMS

A. Crossarms and Timbers: Straight-grained Douglas fir, free of twists to within 0.1 inch per foot (1 percent) of length, with bends and twists in only one direction.

B. Preservative: Copper Naphthenate meeting the requirements of AWPA P8.

C. Apply preservative to crossarms to AWPA C25 with minimum net retention of 1 pound per cubic foot.

D. Crossarm Dimensions: 4.25 x 5.25 inches x 9 feet or as specified by SVP Field Inspector.

2.3 POLE HARDWARE

A. Crossarm Braces: ANSI C135.6, structural steel galvanized to ASTM A675/A675M.

B. Miscellaneous Pole Hardware: Hot-dipped galvanized after fabrication.

C. Angle Braces: 60 inch span x 18 inches, drop-formed in one piece from 1-3/4 x 1-3/4 inch angle.

D. Flat Braces: 1/4 x 1-1/4 inch.

E. Eye Bolts and Nuts: ANSI C135.4.

F. Anchor Rods and Nuts: IEEE C135.2.

G. Bolts and Nuts: IEEE C135.1.

H. Eyenuts and Eyelets: ANSI C135.5.

I. Ground Rods: ANSI C135.30.

J. Guy Strand: High strength 7-strand steel cable galvanized to ASTM A475, Class A or B.

K. Guy Termination: Preformed type.

L. Guy Guards: 8 foot long plastic, colored yellow.

M. Ground Wire: Soft drawn copper conductors, #6 AWG minimum size.

PART 3 - EXECUTION

3.1 PREPARATION

A. Plug unused holes in poles using treated wood dowel pins. Treat field-cut gains and field-bored holes with preservative.

B. Cut gains on face of pole, with gained surfaces in parallel planes.

C. Shorten poles when required by cutting from top end. Apply hot preservative to shortened end of pole.

3.2 EXISTING WORK

A. Remove abandoned poles and hardware.

B. Extend existing pole line installations using materials and methods [compatible with existing installations, or] as specified.

C. Repair existing poles and hardware to remain. Remove abandoned crossarms and hardware from existing poles to remain.

3.3 INSTALLATION

A. Dig setting holes large enough to permit use of tampers to full depth. Place earth in maximum 6 inch layers and pack to 90 percent density.

B. Set poles in straight line. Place curved poles with curvature in line with lead pole. Maintain even grade.

C. Set poles plumb. Rake poles located at corners, angles, and dead ends so poles are plumb after line installation.

D. Do not install poles along edge of cuts and embankments or where soil is in danger of washing out.

E. Set crossarms at right angles to line for straight runs; and to bisect angle of turns in line direction.

F. Install two braces for each crossarm.

G. Install anchor rods, guy strands, and accessories.

H. Install ground rods and ground wire. Refer to Section 02590.

I. Identify each pole using yellow aluminum markers stamped with characters 2.5 inches high minimum. Locate for maximum visibility and fasten with aluminum nails. Obtain identifying numbers from SVP Field Inspector.

3.4 FIELD QUALITY CONTROL

A. Section 01455 – Testing and Inspection: Field inspecting, testing, adjusting, and balancing.

B. Field-test at least one anchor of each capacity installed to rated holding power.

END OF SECTION

THIS PAGE

INTENTIONALLY

LEFT BLANK

SECTION 02590

# SITE GROUNDING

## PART 1 - GENERAL

### 1.1 SUMMARY

A. Section Includes:
   1. Rod electrodes.
   2. Mechanical connectors.
   3. Wire.

B. Related Sections:
   1. Section 02585 – Utility Poles
   2. Section 16311 – Line Materials

### 1.2 REFERENCES

A. California Public Utilities Commission
   1. General Order 95 – Rules for Overhead Electric Line Construction

### 1.3 SYSTEM DESCRIPTION

A. Single vertical rod electrode for local grounding at a utility transformer or other piece of equipment.

### 1.4 SUBMITTALS

A. Section 01330 - Submittal Procedures: Requirements for submittals.

B. Product Data: Submit data for grounding electrodes and connectors.

### 1.5 CLOSEOUT SUBMITTALS

A. Section 01780 – Project Record Documents: Project Record Product Data.

B. Project Record Documents: Record actual locations of electrodes and connections.

### 1.6 QUALITY ASSURANCE

A. Perform Work in accordance with CPUC General Order 95.

1.7 QUALIFICATIONS

A. Manufacturer: Company specializing in manufacturing Products specified in this section with minimum five (5) years documented experience.

PART 2 - PRODUCTS

2.1 ROD ELECTRODES

A. Manufacturers:
1. Blackburn - Model 6258.
2. Joslyn - Model J8338.
3. Dottie - Model GR5808.
4. Eritech – Model 615880
5. Substitutions: Section 01600 - Product Requirements.

B. Product Description: 10 mil Copper-clad steel ground rod.

C. Diameter: 5/8 inch.

D. Length: Eight (8) feet.

2.2 MECHANICAL CONNECTORS

A. Manufacturers:
1. Blackburn - Model JAB 58H or Model DCG58-66.
2. Dossert - Model GN-62.
3. Joslyn - Model J 8492.
4. Penn Union – Model CAB-2
5. Substitutions: Section 01600 - Product Requirements.

B. Description: Cast high strength, corrosion resistant, copper alloy connector, suitable for direct burial attachment to ground rod specified in Part 2.1 of this section.

2.3 WIRE

A. Material: soft drawn solid copper.

B. Connections to Electrodes: #6 AWG, minimum size.

C. Bonding Other Objects: #6 AWG, minimum size.

D. Mechanical Connector: Bronze.

PART 3 - EXECUTION

3.1 EXISTING WORK

A. Remove exposed abandoned grounding components. Cut conductors flush with grade and paving, and patch surfaces.

B. Extend existing site grounding installations using materials and methods as specified.

C. Clean and repair existing grounding connections remaining.

3.2 INSTALLATION

A. Install rod electrodes in vertical position with top at least one (1) foot below finished grade level.

B. Install interconnecting wire one (1) foot below finished grade level.

3.3 FIELD QUALITY CONTROL

A. Section 01455 – Testing and Inspection: Field inspecting, testing, adjusting, and balancing.

END OF SECTION

THIS PAGE

INTENTIONALLY

LEFT BLANK

SECTION 16311

# LINE MATERIALS

## PART 1 - GENERAL

### 1.1 SUMMARY

A. Section includes line conductors, insulators, and overhead line accessories.

B. Related Sections:
1. Section 02585 - Utility Poles.
2. Section 02590 – Site Grounding.

### 1.2 REFERENCES

A. American National Standards Institute:
1. ANSI C29.2 - Insulators - Wet-Process Porcelain and Toughened Glass - Suspension Type.
2. ANSI C29.6 - Wet Process Porcelain Insulators (High Voltage Pin Type).
3. ANSI C29.7 - Wet-Process Porcelain Insulators, High-Voltage Line-Post Type.
4. ANSI C119.4 – Standard for Electric Connectors for Use Between Aluminum-to Aluminum or Aluminum-to-Copper Conductors.
5. ANSI C135.17 - Insulator Pins with Lead Threads for Overhead Line Construction, Galvanized Ferrous Bolt-Type.
6. ANSI C135.22 - Zinc-Coated Ferrous Pole-Top Insulator Pins with Lead Threads for Overhead Line Construction.
7. ANSI C135.31 - Zinc-Coated Ferrous Single and Double Upset Spool Insulator Bolts for Overhead Line Construction.

B. ASTM International:
1. ASTM B230 - Standard Specification for Aluminum 1350 – H19 Wire for Electrical Purposes.
2. ASTM B231 - Standard Specification for Aluminum Conductors, Concentric-Lay-Stranded.

C. Institute of Electrical and Electronics Engineers:
1. IEEE C2 - National Electrical Safety Code.
2. IEEE 524 – Guide to the Installation of Overhead Transmission Line Conductors.
3. IEEE 987 – Guide for the Application of Composite Insulators.

D. Silicon Valley Power:
1. OH 750 – 60kV Twin Vertical Pole Line.
2. OH 751 – 60kV Twin Vertical Pole Line Reduced Tension Construction

1.3 SUBMITTALS

A. Section 01330 - Submittal Procedures: Submittal procedures.

B. Product Data: Submit catalog data for line materials, line hardware, insulators, cutouts, and arresters.

PART 2 - PRODUCTS

2.1 LINE HARDWARE

A. Manufacturers:
1. Alcoa.
2. Hubbell Power Systems.
3. MacLean Power Systems.
4. Substitutions: Section 01600 - Product Requirements.

B. Pole-top Insulator Pins: ANSI C135.22.

C. Spool Insulator Bolts: ANSI C135.31.

2.2 INSULATORS

A. Manufacturers:
1. Hubbell Power Systems.
2. Lapp.
3. MacLean Power Systems.
4. Substitutions: Section 01600 - Product Requirements.

B. Product Description: Radio interference free wet process porcelain insulators with minimum wet flashover rating of 80 kV.

C. Line Post Insulators: ANSI C29.7.

D. Suspension Insulators: ANSI C29.2.

E. Pin Insulators: ANSI C29.6.

F. Guy Strain Insulators: ANSI C29.4.

## 2.3 LINE CONDUCTORS

A. Manufacturers:
   1. 3M.
   2. Substitutions: Section 01600 - Product Requirements.

B. High Voltage Overhead Line Conductors: Bare aluminum conductor composite reinforced (ACCR) ASTM B230, ASTM B231.

C. Ground Wire: Soft drawn copper conductors, 6 AWG minimum size.

# PART 3 - EXECUTION

## 3.1 EXAMINATION

A. Verify proper pole and crossarm installations.

## 3.2 EXISTING WORK

A. Disconnect abandoned overhead lines and remove overhead line materials.

B. Extend existing overhead line installations using materials and methods as specified.

C. Clean and repair existing overhead line materials to remain or to be reinstalled.

## 3.3 INSTALLATION

A. Install in accordance with IEEE C2, IEEE 524, CPUC GO 95, and manufacturer's installation instructions.

B. All splicing shall be done in the presence of a SVP field representative. Splices shall not be made within fifteen feet (15') of a structure, nor shall there be more than one (1) splice per conductor in any span. Splices shall not be installed in crossings over railroads, roads, highways, transmission lines, or rivers. Splice sleeves shall not be installed within one hundred feet (100') of a deadend. Whenever splices are made under tension, come-alongs shall not be placed nearer than twenty-five feet (25') to the point of the splice or deadend.

## 3.4 FIELD QUALITY CONTROL

A. Section 01455 – Testing and Inspection: Field inspecting, testing, adjusting, and balancing.

3.5 Repairs

A. Damage to the conductor caused by the Contractor shall be repaired in a manner determined by the engineer at the expense of the Contractor. Damage is defined as any deformity on the surface of the conductor that can be detected by eye or feel. Damage includes but is not limited to nicks, scratches, abrasions, kinks, basketing, popped-out strands, and broken strands.

B. Depending upon the severity of the damage and the length of the damaged section, repair shall be made by carefully smoothing the conductor with fine sandpaper, covering it with preformed repair rods, or by cutting and splicing.

C. Kinked, basketed, or severely damaged sections of conductor shall be cut out. When there is repeated damage in the same span or in consecutive spans, all conductor in these spans shall be replaced.

D. When one (1) aluminum strand is broken or nicked deeper than one-third (1/3) its diameter, or when a number of strands are reduced in area not exceeding the area of one (1) strand, a preformed repair rod shall be installed. When more than one (1) strand is broken or the conductor is reduced in area by more than one (1) strand, the damage section shall be cut out.

E. Not more than two (2) splice sleeves for repairing damage shall be applied in any two hundred feet (200') of conductor, except at the direction of the engineer. Compression repair splice sleeves shall not be installed within fifteen feet (15') of a suspension structure. A minimum of twenty feet (20') of conductor (or ground wire) shall be cut off on each side of the damaged section.

END OF SECTION

# APPENDIX A

## Maps, Drawings, and Sketches

# INDEX & GENERAL NOTES

## INDEX TO DRAWINGS


Sheet 1 - Index, General Notes

Sheet 2 - Materials List

Sheet 3 - Materials List

Sheet 4 - Twin, 0° to 15° Angle Construction

Sheet 5 - Twin, 15° to 30° Angle Construction

Sheet 6 - Twin, 0° to 45° Deadend Angle Construction

Sheet 7 - Twin, above 45° Deadend Angle Construction


## GENERAL NOTES

1. CSC standard construction for 60kV pole line shall be:

   Conductors: Twin, 954 MCM Al
   Span: Short span urban (average 200 ft; maximum 275 ft)
   Maximum conductor tension: 2900 lbs (including wind load)
   Maximum resultant tension on insulators & hardware: 6000 lbs

2. Sheets 4 and 5 cover twin angles up to 30°. For twin angles above 30°, deadend construction should be used. Sheets 6 and 7 apply.

3. The main purpose of drawings (shts 4 through 7) is to show line construction for different angle configurations. Guying and Bonding details are not shown fully. For details on these, refer to CSC Standards in "Guys" section, and drawing 06667 - Bonding Details in "Conductors" section.

4. Bond wire shall be one continuous wire. Bond all guys that are not sectionalized.

5. When 3 guy cables are required, attach one at each phase level.

6. Bolts (item 19) should not protrude nut more than 1/2". If necessary, cut bolts and touch-up with zinc primer. Provide a longer bolt only for the lower through bolt at bottom phase so that 2-1/2" extension can be left for attachment of a grounding clamp.

| REV. | DATE | DESCRIPTION | REV. | DATE | DESCRIPTION |
|---|---|---|---|---|---|
| | | | | | |

| | | |
|---|---|---|
| BY: BT 8-27-90 | ENGINEERING STANDARD | DRAWN BY: |
| APPROVED: | 60KV TWIN VERTICAL POLE LINE<br>INDEX & GENERAL NOTES | SHEET 1 OF 7 |
| | CITY OF SANTA CLARA | DRAWNG NO. OH 750 / REV 0 |

## MATERIALS LIST

| ITEM NO. | | DESCRIPTION | BIN NO. |
|---|---|---|---|
| 1 | | Pole, wood, class as required | |
| 2 | | Insulator, Suspension, 60kV, porcelain | 79030 |
| 3 | 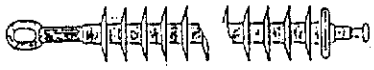 | Insulator, Suspension, 60kV, Rubber | 73058 |
| 4 | 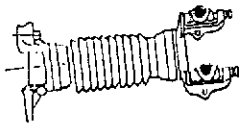 | Insulator, Post type, horizontal, twin trunnion, porcelain | 93086 |
| 5 | | Eye Nut, oval, with 3/4" tapped bolt hole | 70065 |
| 6 | | Shackle, Anchor | 77119 |
| 7 | | Eye Ball | 77104 |
| 8 | 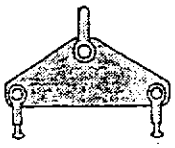 | Yoke assembly, Strain, with Socket Clevis and 2 Ball Clevises | 82028 |
| 9 | 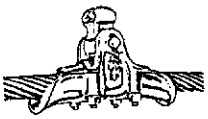 | Clamp, Suspension with Socket Eye, (954 MCM Al) | 71188 |
| 10 | 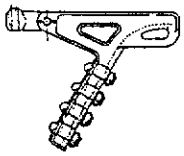 | Clamp, Dead End, with Socket Eye, (954 MCM Al) | 71190 |

| REV. | DATE | DESCRIPTION | REV. | DATE | DESCRIPTION |
|---|---|---|---|---|---|
| | | | | | |

| | | |
|---|---|---|
| BY: BT 8-27-90 | ENGINEERING STANDARD | DRAWN BY: |
| APPROVED: | 60KV TWIN VERTICAL POLE LINE MATERIALS LIST | SHEET 2 OF 7 |
| | CITY OF SANTA CLARA | DRAWING NO. OH 750 / REV 0 |

## MATERIALS LIST (CONTD.)

| ITEM NO. | | DESCRIPTION | BIN NO. |
|---|---|---|---|
| 11 | | Clamp, Trunnion 954 MCM Al, bare | 71189 |
| 12 | 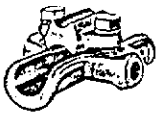 | Clamp, Trunnion, 954 MCM Al, w/armor rod, | 71173 |
| 13 | | Connector, 3-bolt 954 Al to 954 Al | 71187 |
| 14 | 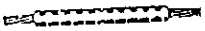 | Connector, non-tension 954 Al | 71180 |
| 15 | | Guard, Line (954 MCM Al) | 89046 |
| 16 | | High Voltage Sign | 72163 |
| 17 | | Bonding Materials, as required | |
| 18 | | Guy Materials, as required | |
| 19 | | Bolt, all thread, 3/4", with 4 nuts, length as required | 70059/ 60/61 |
| 20 | | Washer, 3/4" flat round | 70044 |
| 21 | | Washer, square, curved 4"x4", for 3/4" Bolt | 70049 |
| 22 | | Washer, 3/4" lock helical, zinc plated | 70042 |
| 23 | | Bolt, Machine 5/8", with nut, length as required | 70017/ 18/19/20 |
| 24 | | Washer, square, curved 3" x 3" for 5/8" bolt | 70050 |

| REV. | DATE | DESCRIPTION | REV. | DATE | DESCRIPTION |
|---|---|---|---|---|---|
| | | | | | |

| | | |
|---|---|---|
| BY: BT 8-27-90 | ENGINEERING STANDARD | DRAWN BY: |
| APPROVED: | 60KV TWIN VERTICAL POLE LINE MATERIALS LIST | SHEET 3 OF 7 |
| | CITY OF SANTA CLARA | DRAWNG NO. OH 750 / REV C |

## 60KV POLE LINE: 0° TO 15° ANGLE

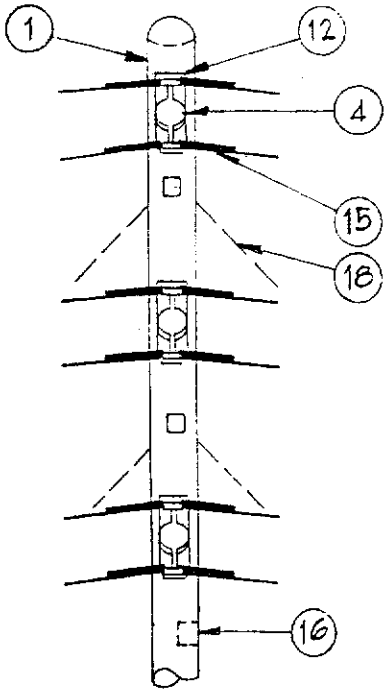


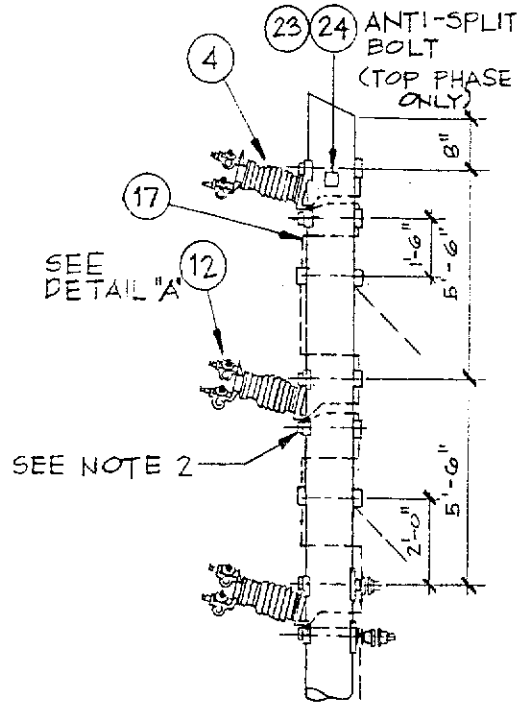


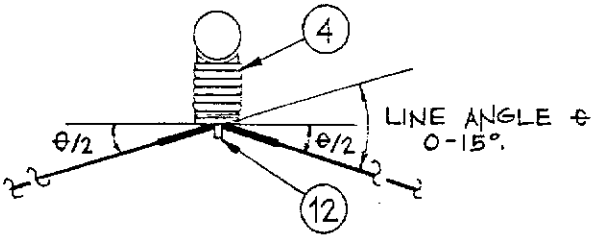


PLAN VIEW

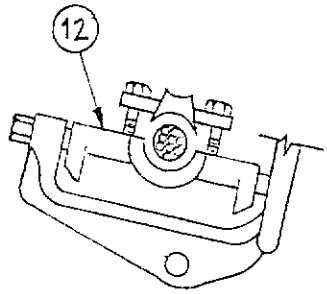


DETAIL "A"

NOTES

1. Post insulator should be positioned on pole to split the line angle (θ) into two equal halves (θ/2), as shown in the diagram.

2. For Insulator to Pole attachment details, see Standard CO43621 sheets 1 and 2.

3. For description of materials, see sheets 2 and 3.

| REV. | DATE | DESCRIPTION | REV. | DATE | DESCRIPTION |
|---|---|---|---|---|---|
| | | | | | |

| | | |
|---|---|---|
| BY: BT 8-27-90 | ENGINEERING STANDARD | DRAWN BY: |
| APPROVED: | 60KV TWIN VERTICAL POLE LINE 0°-15° ANGLE CONSTRUCTION | SHEET 4 OF 7 |
| | CITY OF SANTA CLARA | DRAWING NO. OH 750 / REV 0 |

# 60KV POLE LINE: 15° TO 30° ANGLE

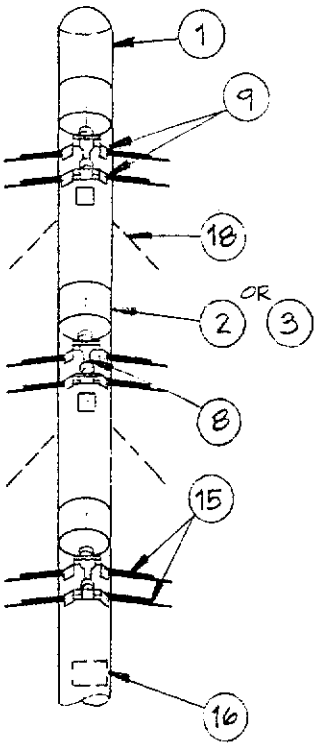


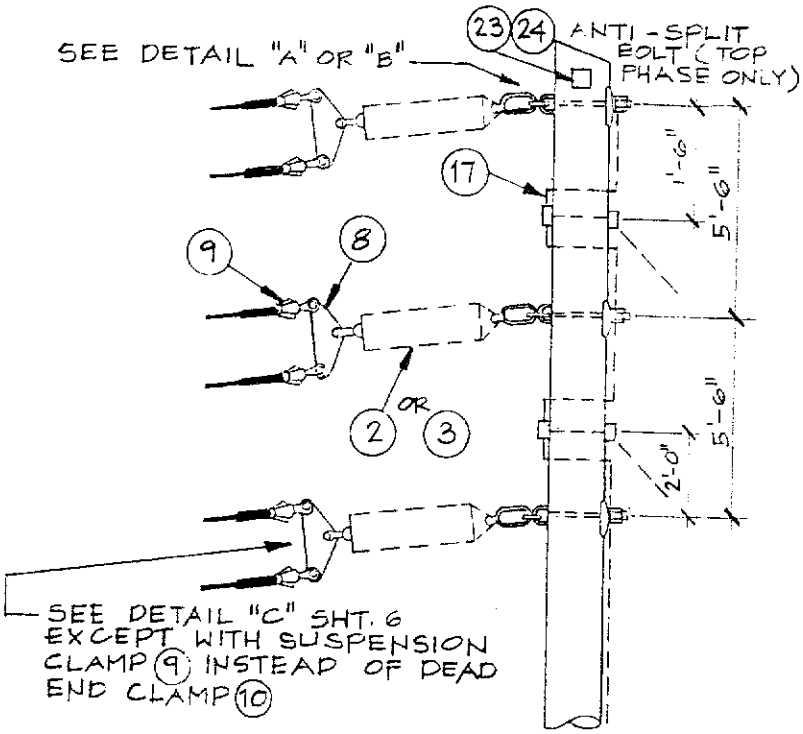


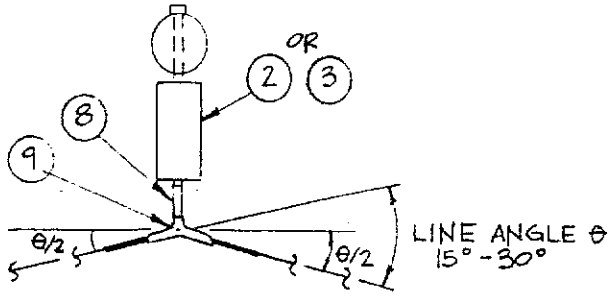


PLAN VIEW

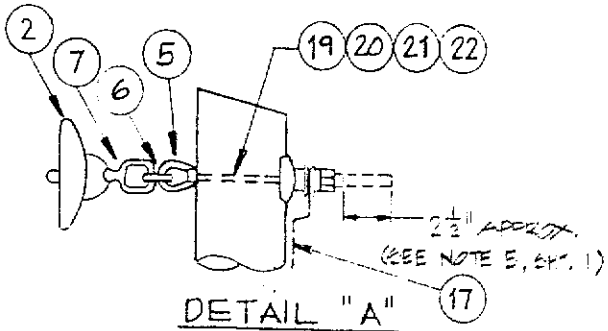


DETAIL "A"
PORCELAIN INSULATOR
ATTACHMENT TO POLE

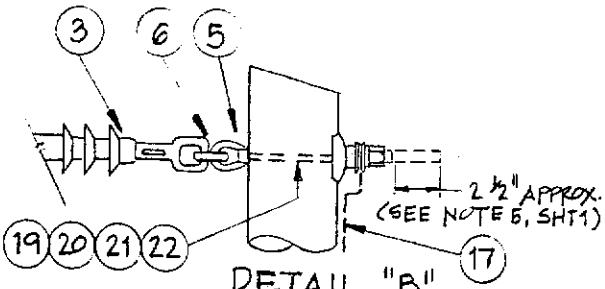


DETAIL "B"
RUBBER INSULATOR
ATTACHMENT TO POLE

NOTES

1. Insulator should be positioned to split line angle θ into two equal halves (θ/2) as shown in diagram.
2. For description of materials see sheets 2 and 3

| REV. | DATE | DESCRIPTION | REV. | DATE | DESCRIPTION |
|---|---|---|---|---|---|
| | | | | | |

| | | |
|---|---|---|
| BY: BT 8-27-90 | ENGINEERING STANDARD | DRAWN BY: |
| APPROVED: | 60KV TWIN VERTICAL POLE LINE 15° TO 30° ANGLE CONSTRUCTION | SHEET 5 OF 7 |
| | CITY OF SANTA CLARA | DRAWNG NO. OH 750 — REV C |

## 60KV POLE LINE: 0° TO 45° DEADEND ANGLE

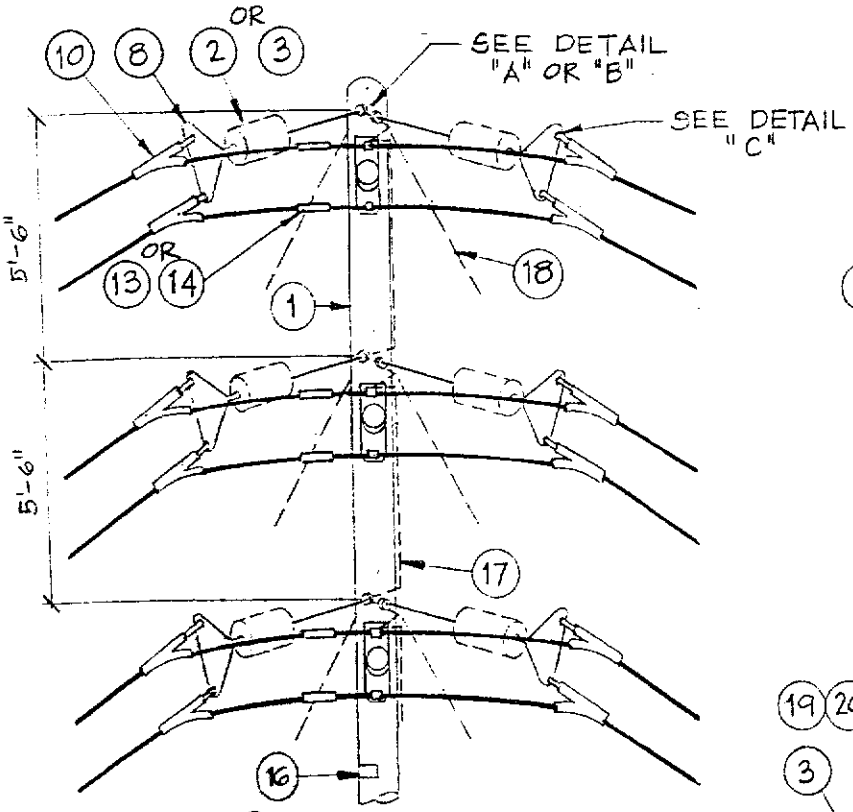


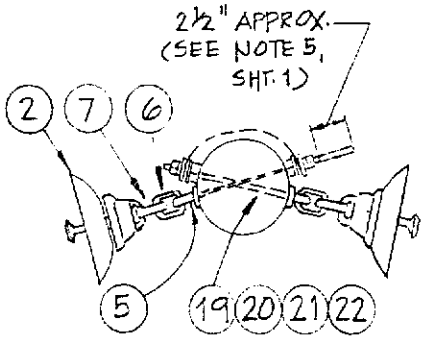


DETAIL "A"
PORCELAIN INSULATOR
ATTACHMENT TO POLE

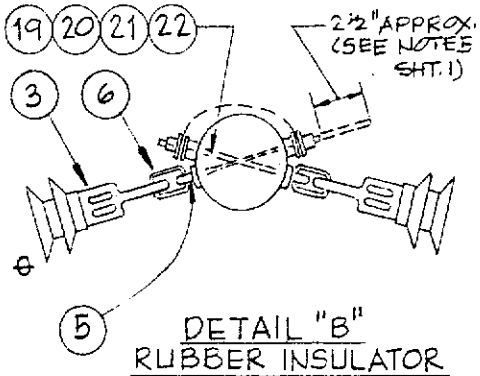


DETAIL "B"
RUBBER INSULATOR
ATTACHMENT TO POLE

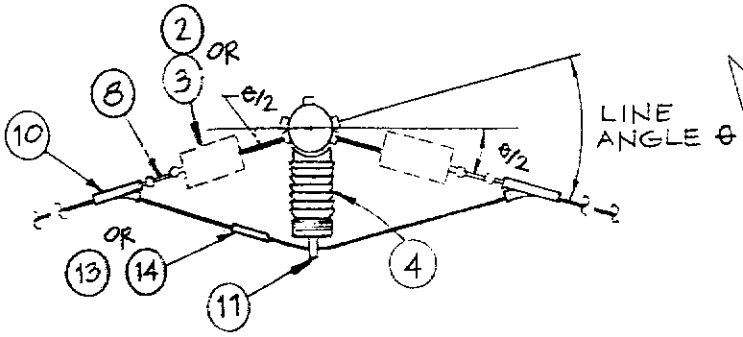


PLAN VIEW

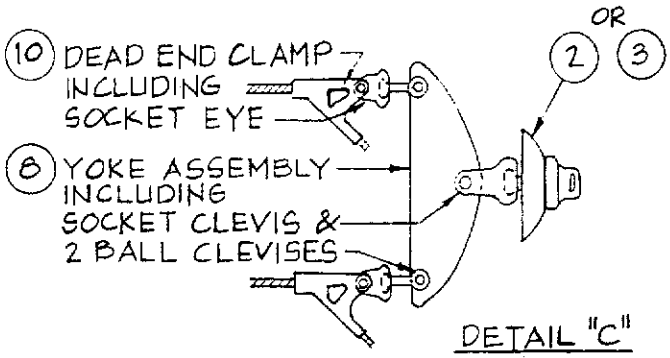


DETAIL "C"
YOKE ASSEMBLY

NOTES

1. Post insulator should be positioned symmetrically between the lines, as shown in diagram.
2. For description of materials see sheets 2 and 3

| REV. | DATE | DESCRIPTION | REV. | DATE | DESCRIPTION |
|---|---|---|---|---|---|
| | | | | | |

| | | |
|---|---|---|
| BY: BT 8-27-90 | ENGINEERING STANDARD | DRAWN BY: |
| APPROVED: | 60KV TWIN VERTICAL POLE LINE<br>0°-45° DEADEND ANGLE CONSTRUCTION<br>CITY OF SANTA CLARA | SHEET 6 OF 7 |
| | | DRAWING NO. OH 750 — REV 0 |

# 60KV POLE LINE: ABOVE 45° DEADEND ANGLE

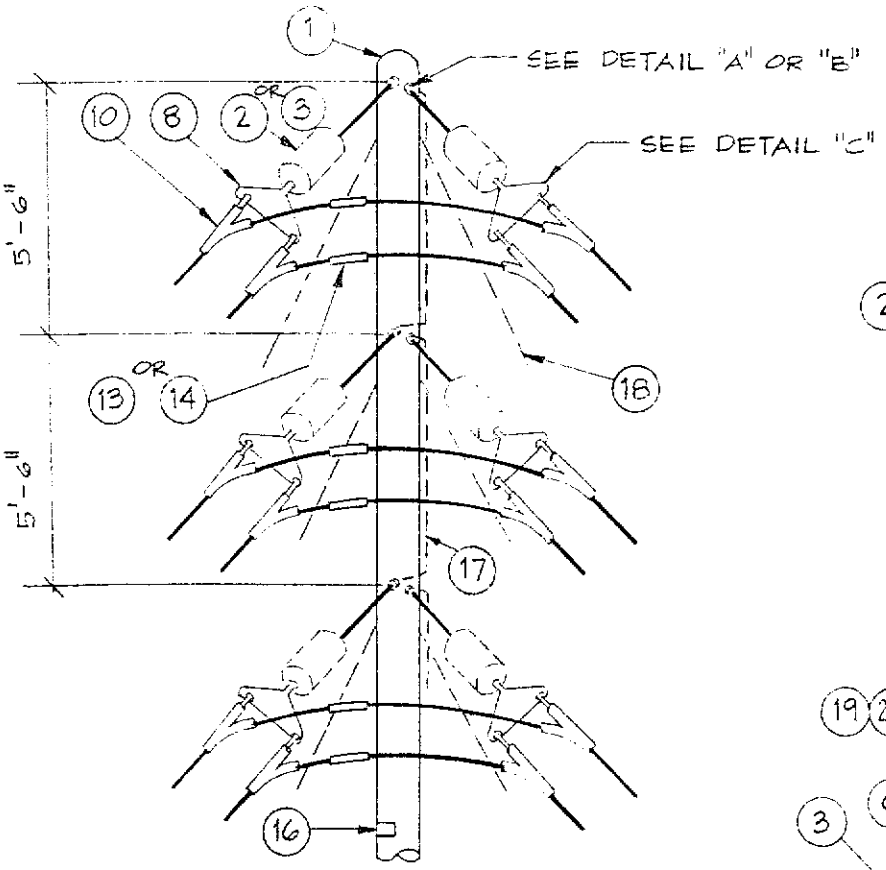


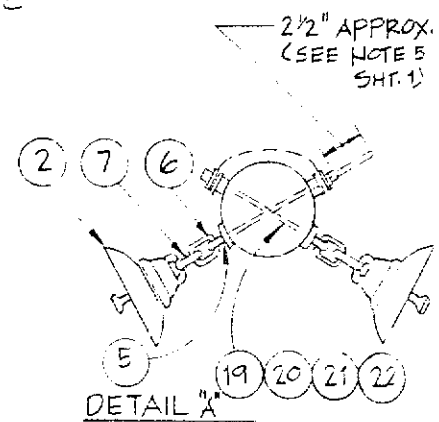


DETAIL "A"
PORCELAIN INSULATOR
ATTACHMENT TO POLE

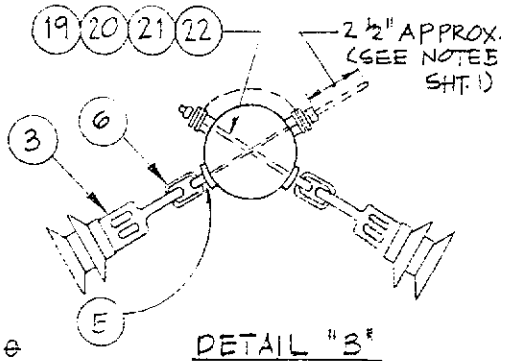


DETAIL "B"
RUBBER INSULATOR
ATTACHMENT TO POLE

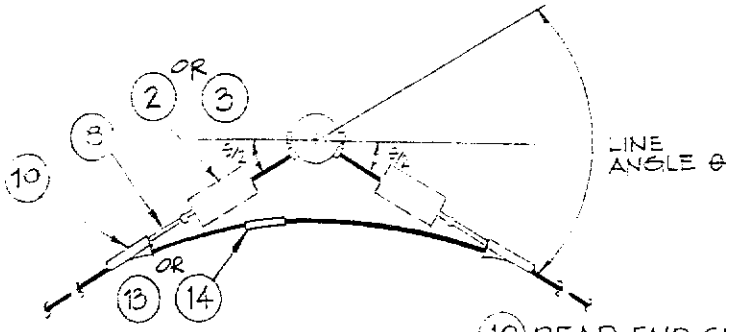


PLAN VIEW

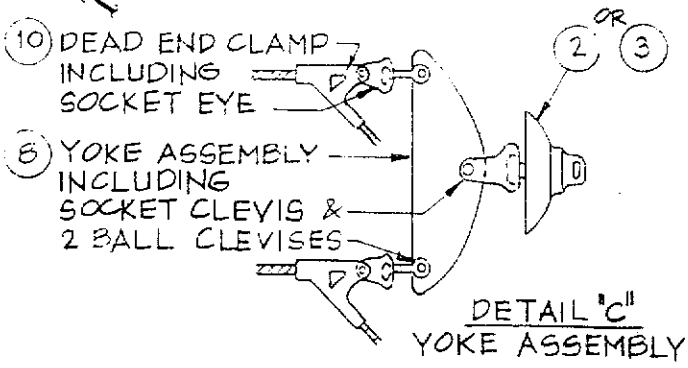


DETAIL "C"
YOKE ASSEMBLY

NOTE:

For description of materials
see sheets 2 and 3

| REV. | DATE | DESCRIPTION | REV. | DATE | DESCRIPTION |
|---|---|---|---|---|---|
| | | | | | |

| | | |
|---|---|---|
| BY: BT 8-27-90 | ENGINEERING STANDARD | DRAWN BY: |
| APPROVED: | 60KV TWIN VERTICAL POLE LINE ABOVE 45° DEADEND ANGLE CONSTRUCTION | SHEET OF |
| | CITY OF SANTA CLARA | DRAWING NO. OE 750 / REV |

## 60 KV POLE LINE: REDUCED TENSION (SLACK) SPAN CONSTRUCTION

APPLICATION:

1. Reduced tension (slack) span construction is required at locations where adequate lead space for full tension guys is not available. For standard, full tension construction, see dwg OH 750 Shts 1 through 7.

2. Reduced tension spans should be kept as short as practicable, and in no case should exceed 60 ft. for twin 954 MCM Al.

3. Following are the alternative methods of construction for attachment of a reduced tension span to the pole. Any one or combination of methods may be employed in a span. Specific attachment method(s) for each span should be determined on the basis of its particular conditions: span length, angle, requirements and site availability.

   (A) USING POST INSULATORS WITH TRUNNION CLAMPS:

   This is the preferred construction for angles with reduced tension spans, where enough space is available to follow a curve.

   Illustrative application example shows a 90° bend with one corner pole A and two reduced tension spans. Actual number of corner poles and configuration will vary depending on angle requirements and site availability.

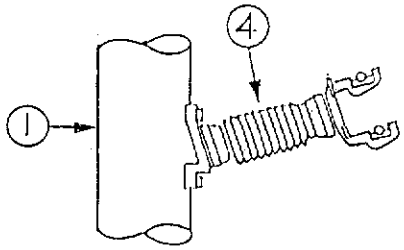


ATTACHMENT DETAIL

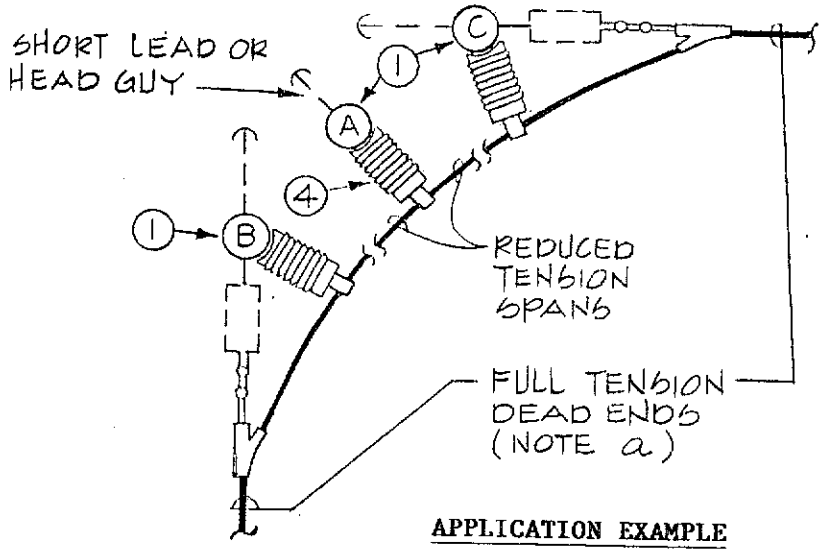


APPLICATION EXAMPLE

NOTES:

(a) For full tension deadend construction details for poles B and C refer to dwg. OH 750 Sht. 6.

(b) For material items, refer to dwg. OH 750 Sht. 3.

| REV. | DATE | DESCRIPTION | REV. | DATE | DESCRIPTION |
|---|---|---|---|---|---|
| | | | | | |

| | | |
|---|---|---|
| BY: BT 1/21/91 | ENGINEERING STANDARD | DRAWN BY: NN |
| APPROVED: | 60KV TWIN VERTICAL POLE LINE<br>REDUCED TENSION CONSTRUCTION<br>CITY OF SANTA CLARA | SHEET 1 OF 3 |
| | | DRAWING NO. OH 751 — REV 0 |

## 60 KV POLE LINE: REDUCED TENSION (SLACK) SPAN CONSTRUCTION (CONTD)

### (B) USING POST INSULATORS WITH STRAIGHT STRAIN CLAMPS:

This is the preferred construction for angles at a corner where space is not available for the line to go around in a curve.

Illustrative application examples show a 90° angle. Pole D may have one reduced tension and one full tension span (requiring one full tension guy), or two reduced tension spans (requiring no full tension guy). Actual layout and arrangement will vary, depending on angle requirements and site availability.

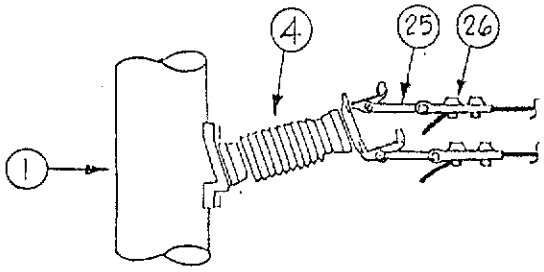


ATTACHMENT DETAIL

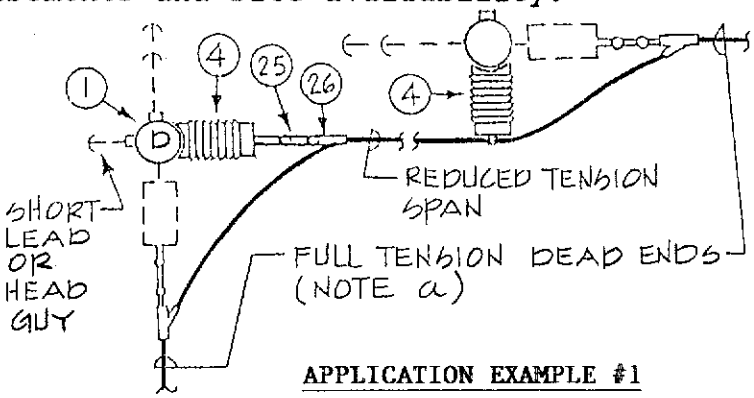


APPLICATION EXAMPLE #1

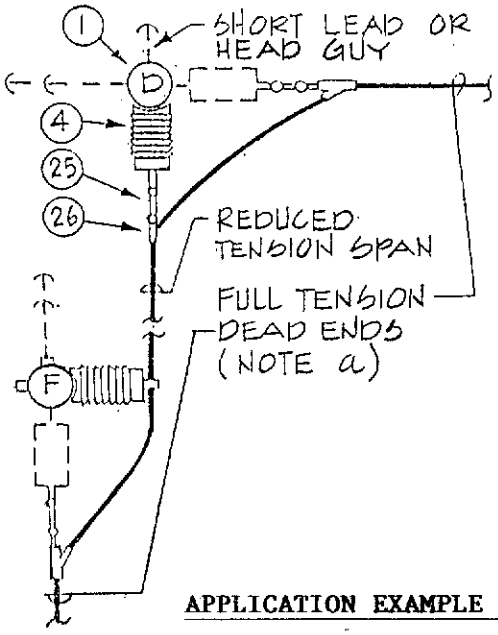


APPLICATION EXAMPLE #2

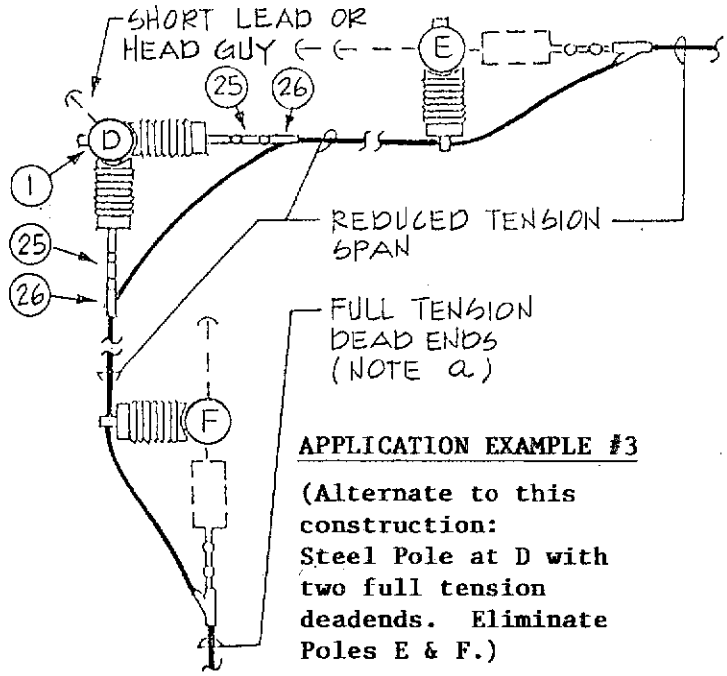


APPLICATION EXAMPLE #3

(Alternate to this construction: Steel Pole at D with two full tension deadends. Eliminate Poles E & F.)

NOTES:

(a) For full tension deadend construction details refer to dwg. OH 750 Sht 6.

(b) (25) : Extn. Link, Bin #77151; (26) : Strain Clamp, Bin #71152

For other material items, refer to dwg. OH 750 Shts 2 & 3.

| REV. | DATE | DESCRIPTION | REV. | DATE | DESCRIPTION |
|---|---|---|---|---|---|
| | | | | | |

| | | |
|---|---|---|
| BY: BT 1/21/91 | ENGINEERING STANDARD | DRAWN BY: NN |
| APPROVED: | 60KV TWIN VERTICAL POLE LINE REDUCED TENSION CONSTRUCTION | SHEET 2 OF 3 |
| | CITY OF SANTA CLARA | DRAWING NO. OH 751 — REV 0 |

## 60 KV POLE LINE: REDUCED TENSION (SLACK) SPAN CONSTRUCTION (CONTD)

(C) USING RUBBER SUSPENSION INSULATORS:

This is an optional construction. It shall be used only for applications where construction using post insulators is not possible, for example, on substation steel structures. This method uses standard deadend construction with rubber suspension insulators, except for method of guying. Steel structures and poles do not require any guys, and for wood poles, only a short lead guy is provided for the reduced tension span.

Illustrative application example shows a reduced tension span between steel structure G and wood pole H. (G and/or H may be steel pole(s) instead.) Actual layout and arrangement will vary depending on angle requirements and site availability.

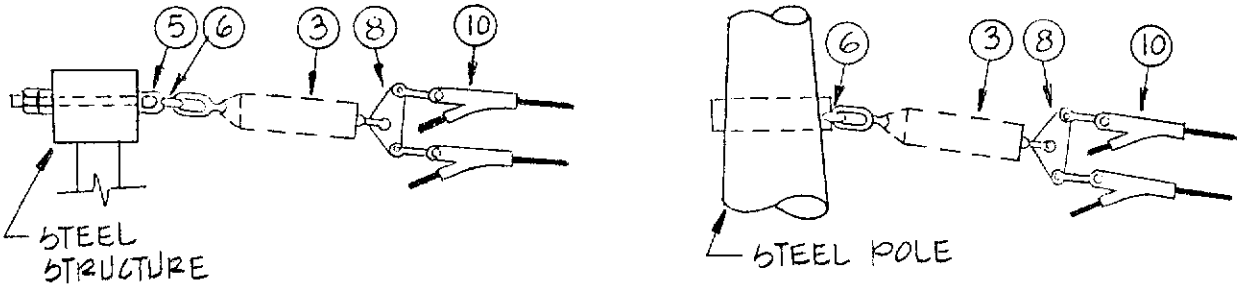


ATTACHMENT DETAILS

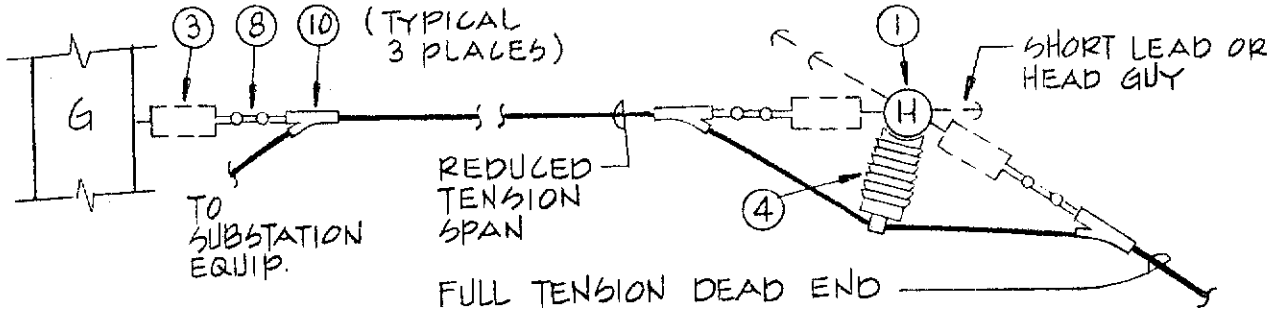


APPLICATION EXAMPLE

NOTES:

(a) For full tension deadend construction details for pole H, refer to drawing OH 750 Shts 6 and 7.

(b) For material items refer to drawing OH 750 Shts 2 and 3.

| REV. | DATE | DESCRIPTION | REV. | DATE | DESCRIPTION |
|---|---|---|---|---|---|
| | | | | | |

| | | |
|---|---|---|
| BY: BT 1/21/91 | ENGINEERING STANDARD | DRAWN BY: NN |
| APPROVED: | 60KV TWIN VERTICAL POLE LINE REDUCED TENSION CONSTRUCTION | SHEET 3 OF 3 |
| | CITY OF SANTA CLARA | DRAWING NO. OH 751 — REV C |

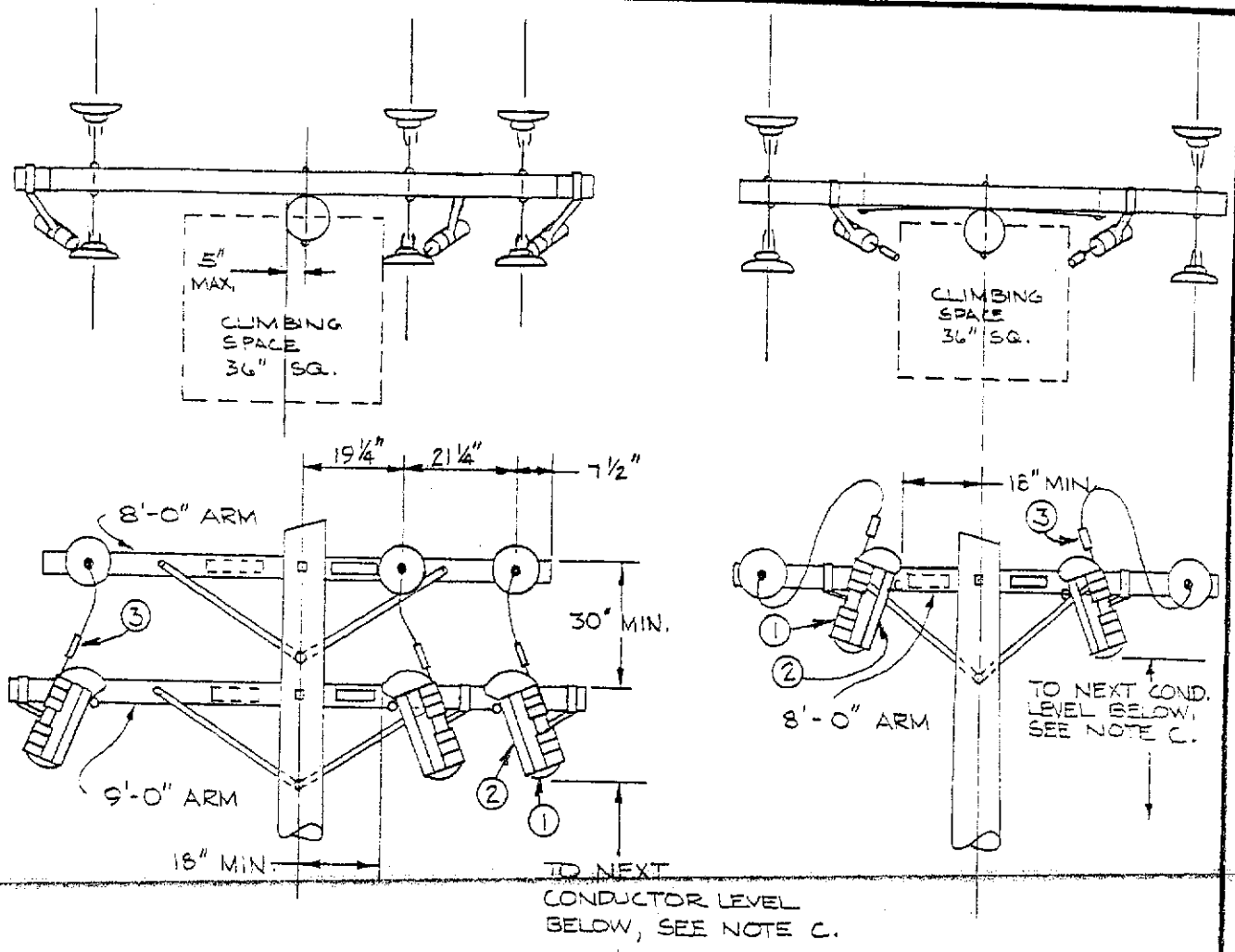


THREE PHASE IN LINE CONSTR.

SINGLE PHASE IN LINE CONSTR.

BILL OF MATERIALS:

| ITEM | DESCRIPTION | BIN No. |
|---|---|---|
| 1 | 100 AMP LOADBREAK CUTOUT | 80127 |
| 2 | 40 AMP TYPE K FUSE * | 72042 |
| 3 | ELF 40 | 72125 |

* MAX. CONTINUOUS CURRENT OF 60 AMP

NOTES:

A.) BOND ONLY AS SPECIFIED ON DWG. 06667

B.) FRAME LINE ARM IN ACCORDANCE WITH DWG. 015105 EXCEPT ON SINGLE PHASE LINES USE 8'-0" CROSSARM.

C.) MINIMUM SEPARATION FROM CUTOUTS TO NEXT CONDUCTOR LEVEL: A) 6' FOR SECONDARY IN RACK CONSTRUCTION, AND B) 4' FOR CKTS ON CROSSARM OR SEC. IN RACK (GUARDARM) CONSTR.

D.) CLIMB SPACE SHALL REMAIN CLEAR OF CUTOUTS, OPEN OR CLOSED.

| REV. | DATE | DESCRIPTION | REV. | DATE | DESCRIPTION |
|---|---|---|---|---|---|

BY: P. GRECO

APPROVED: P. Greco 11-18-76

B Cell 12-6-76

[signature] 12-6-76

ENGINEERING STANDARD

INSTALLATION OF CUTOUTS AND FUSES FOR TAPS ON 12KV LINES

CITY OF SANTA CLARA

DRAWN BY: DGM

SHEET 1 OF 2

DRAWNG NO. C022318

REV 0

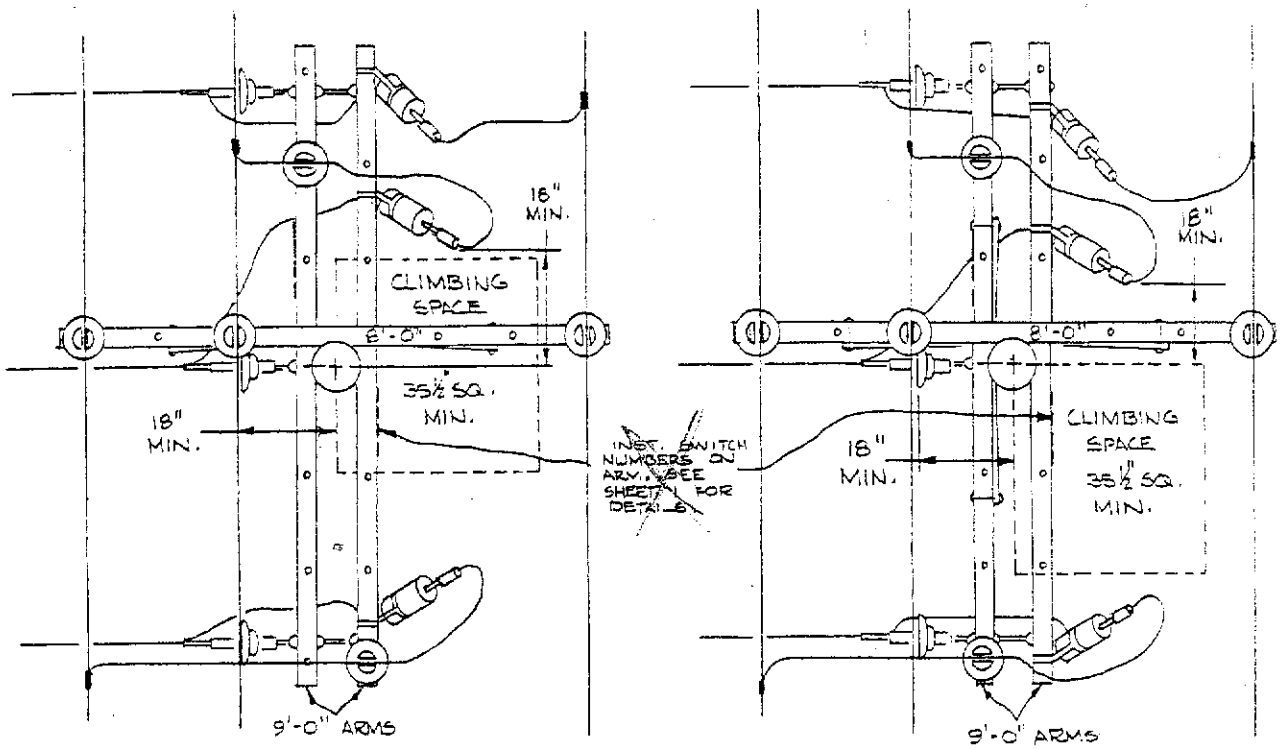


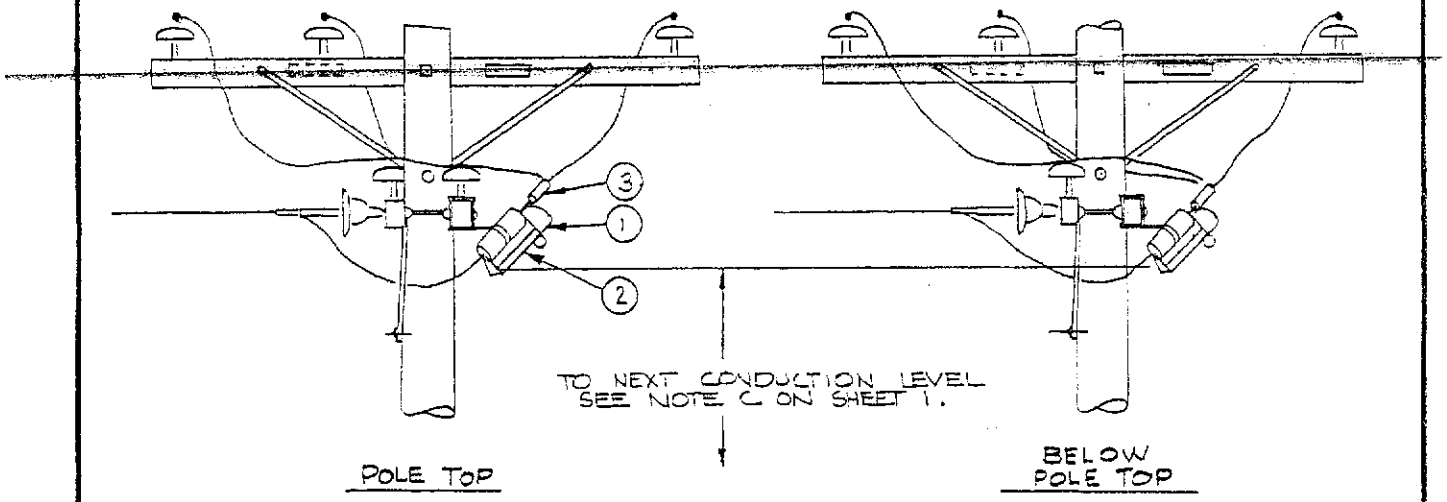


NOTES CONTINUED:

E.) FRAME POLE IN ACCORDANCE WITH DWG 015116 EXCEPT - USE A 9'-0" TAP ARM. INSTALL CUTOUTS AS SHOWN ON THIS DWG.

# T-TAP CONSTRUCTION

| REV. | DATE | DESCRIPTION | REV. | DATE | DESCRIPTION |
|---|---|---|---|---|---|
| | | | | | |

| | | |
|---|---|---|
| BY: P. GRECO | ENGINEERING STANDARD | DRAWN BY: DGM |
| APPROVED: P. Greco 11-29-76 | INSTALLATION OF CUT-OUTS & FUSES FOR TAPS ON 12KV LINES | SHEET 2 OF 2 |
| R. Cell 12-6-76 | | DRAWING NO. C022318 — REV 0 |
| D. Rainey 12-6-76 | CITY OF SANTA CLARA | |

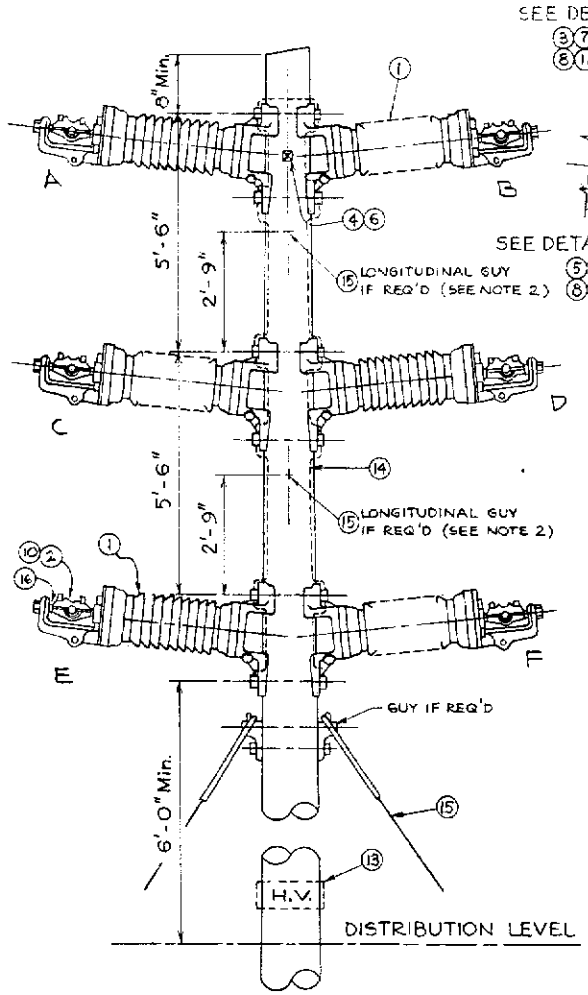


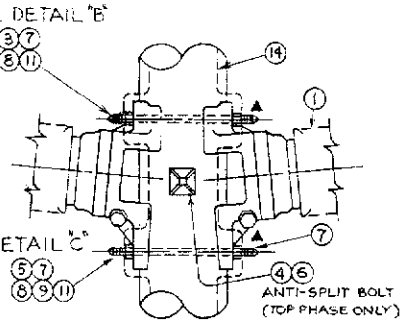


DETAIL "A"
(WITHOUT GUYS)

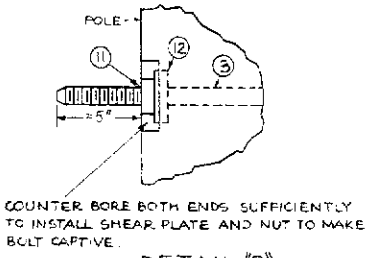


DETAIL "B"
TOP BOLT ONLY

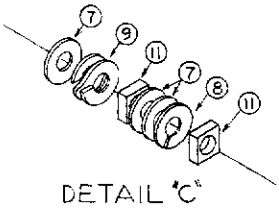

DETAIL "C"

## NOTES:

1. BOND WIRE TO BE ONE CONTINUOUS RUN. BOND ALL GUYS THAT ARE NOT SECTIONALIZED PER PG&E DWG. 06667.
2. A LONGITUDINAL GUY OPPOSITE THE UNBALANCED LOAD MUST BE INSTALLED WHEN THE UNBALANCED LOAD EXCEEDS 100 LBS.
3. ▲ BOLT SHOULD NOT PROTRUDE MORE THAN 1/2 INCH FROM OUTSIDE NUT. IF NECESSARY CUT BOLTS AND TOUCH-UP WITH ZINC PRIMER.
4. INSTALL H.P. INSULATORS IN POSITIONS A, D & E FOR SINGLE CONDUCTOR CONSTRUCTION BUT PLANNED FOR BUNDLED CONDUCTOR CIRCUIT.
5. FOR 115KV POLE LINES REFER TO ENGINEERING.
6. MAX. LINE ANGLE IS 15° FOR THE TYPE OF CONDUCTOR CLAMP AS SHOWN.

* FOR 954 MCM AL. CONDUCTOR.

| ITEM | QUAN. | DESCRIPTION | BIN # |
|---|---|---|---|
| 1 | 6 | INSULATOR, POST TYPE 60 KV WITH GAIN BASE | 79044 |
| 2 | 6 | CLAMP, CONDUCTOR, AS REQ'D. | 71173* |
| 3 | 3 | BOLT, SPACE, 3/4" x LENGTH AS REQ'D, GALV., WITH 4 SQ. NUTS ▲ EA. | 70060 |
| 4 | 1 | BOLT, MACHINE, 5/8", LENGTH AS REQ'D, WITH ONE SQUARE NUT ▲ | 70017 |
| 5 | 3 | BOLT, MACHINE, 3/4", LENGTH AS REQ'D, WITH ONE SQUARE NUT EA. ▲ | 70091 |
| 6 | 2 | WASHER, CURVED, 3" FOR 5/8" BOLT | 70046 |
| 7 | 18 | WASHER, ROUND, 2" O.D. FOR 3/4" BOLT | 70043 |
| 8 | 9 | WASHER, LOCK, GALV., FOR 3/4" BOLT | 70042 |
| 9 | 3 | WASHER, SPRING DOUBLE COIL FOR 3/4" BOLT, ELECT. MATL. CO. TYPE MWO OR EQUIV. | 70078 |
| 10 | 6 | LINE GUARDS AS REQ'D | 89046* |
| 11 | 3 | NUT, SQUARE, AMERICAN STANDARD, REGULAR, GALV., FOR 3/4" BOLT | 72117 |
| 12 | AS REQ | SHEAR PLATE, TECO, PRESSED STEEL, GALV., 2 5/8" O.D. FOR 3/4" BOLT | 77135 |
| 13 | 1 | SIGN, "HIGH VOLTAGE" | 72163 |
| 14 | AS REQ | BONDING MATERIALS, AS REQ'D. | |
| 15 | AS REQ | GUY MATERIALS, IF REQ'D. | |
| 16 | AS REQ | ANTI-STATIC JUMPERS, AS REQ'D. | |

| REV. | DATE | DESCRIPTION | BY | APPD. | REV. | DATE | DESCRIPTION | BY | APPD. |
|---|---|---|---|---|---|---|---|---|---|
| | | | | | | | | | |
| | | | | | | | | | |

BY: QCL DATE: 9/77

APPROVED: DATE:
10-6-77
1/7/77
10-11-77

VERTICAL AND DELTA POST TYPE CONSTR.
60 KV POLE LINE

SUPERSEDES ES-005
DRAWN BY: TQ DATE: 9/77
SHEET Nº 1 OF 2

ELECTRIC DEPARTMENT
CITY OF SANTA CLARA

C043621

REV. 0

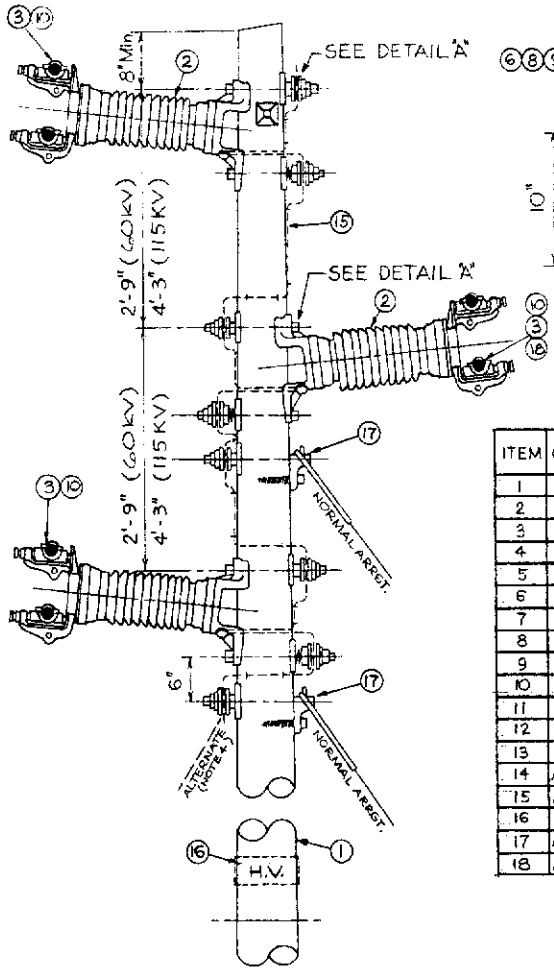


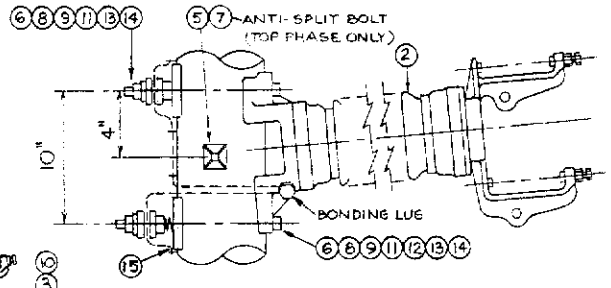


DETAIL "A"

| ITEM | QUAN. | DISCRIPTION | BIN # |
|---|---|---|---|
| 1 | 1 | POLE, WOOD, AS REQ'D. | |
| 2 | 3 | INSULATOR, POST TYPE, FOR 60KV WITH BUNDLED CONDUCTOR HEAD | 93086 |
| 3 | 6 | CLAMP, CONDUCTOR, AS REQ'D. (954 MCM ALUMINUM) | 71173 |
| 4 | | | |
| 5 | 1 | BOLT, MACHINE, 5/8" x LENGTH AS REQ'D. ▲ WITH ONE SQUARE NUT | 70017 |
| 6 | 6 | BOLT, MACHINE, 3/4" x LENGTH AS REQ'D. ▲ WITH ONE SQUARE NUT EA. | 70091 |
| 7 | 2 | WASHER, CURVED, 3" FOR 5/8" BOLT | 70046 |
| 8 | 6 | WASHER, CURVED, 4" FOR 3/4" BOLT | 70050 |
| 9 | 12 | WASHER, ROUND, 2" O.D., FOR 3/4" BOLT | 70043 |
| 10 | 6 | LINE GUARD AS REQ'D. | 89046 |
| 11 | 6 | WASHER, LOCK, GALV. FOR 3/4" BOLT | 70042 |
| 12 | 6 | WASHER, SPRING, DOUBLE COIL, FOR 3/4" BOLT, ELEC. MATL. CO. TYPE MW OR EQUIV. | 70078 |
| 13 | 6 | NUT, SQ., 3/4" AMERICAN STANDARD, REGULAR, GALV. | 72117 |
| 14 | As Req'd | SHEAR PLATE, TECO, PRESSED STEEL, GALV., 2 5/8" O.D. FOR 3/4" BOLT | 77135 |
| 15 | As Req'd | BONDING MATERIALS, AS REQ'D. (SEE NOTE 2) | |
| 16 | 1 | SIGN, "HIGH VOLTAGE" | 72163 |
| 17 | As Req'd | GUY MATERIALS, IF REQ'D. (SEE NOTE 2) | |
| 18 | As Req'd | ANTI-STATIC JUMPER | |

NOTES:

1. SEE DWG. 015203 FOR POLE SETTING DEPTHS AND STRENGTH REQUIREMENTS.
2. BOND WIRE TO BE ONE CONTINUOUS RUN. BOND ALL GUYS THAT ARE NOT SECTIONALIZED AS PER DWG. 066667.
3. FOR STRUCTURAL LIMITATIONS SEE DWG 032553 (44-70KV), AND DWG 048874 (115KV).
4. ▲ BOLTS SHOULD NOT PROTRUDE MORE THAN ½". IF NECESSARY CUT BOLTS AND TOUCH-UP WITH ZINC PRIMER # 56
5. WHEREVER POSSIBLE FRAME DISTRIBUTION SO AS TO BALANCE THE STRUCTURE.
6. MAX. LINE ANGLE IS 15° FOR THE TYPE OF CONDUCTOR CLAMP AS SHOWN.

| REV. | DATE | DESCRIPTION | BY | APPD. | REV. | DATE | DESCRIPTION | BY | APPD. |
|---|---|---|---|---|---|---|---|---|---|
| | | | | | | | | | |

BY: QCL DATE: 9/77

APPROVED: DATE:

10/6/77

12/1/77

10-11-77

VERTICAL AND DELTA POST TYPE CONST.

60 KV POLE LINE

SUPERSEDES ES-005

DRAWN BY: TQ DATE: 9/77

SHEET Nº 2 OF 2

ELECTRIC DEPARTMENT

CITY OF SANTA CLARA

C043621

REV. 0

**Barrier Pipe Details**

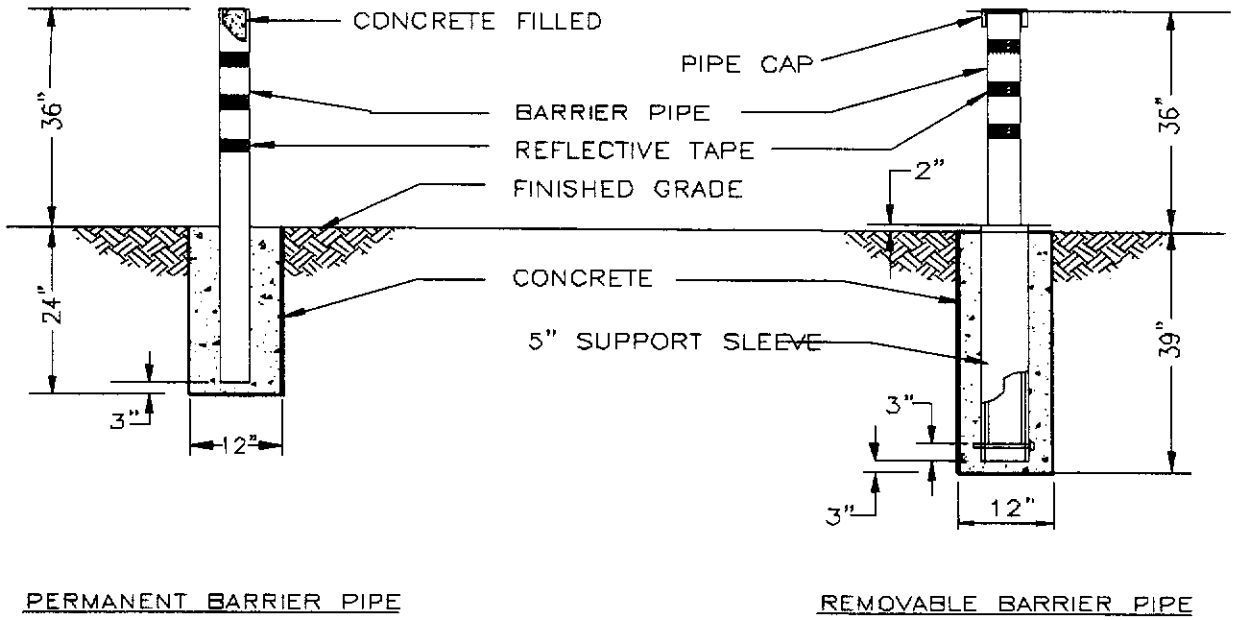


NOTES:

1. Barrier pipes shall be made of 4" galvanized steel schedule 40 standard pipe. Permanent pipes shall be filled with concrete as shown in the detail. Removable pipes shall remain hollow and be capped with a pipe cap.

2. All barrier pipes are to have 3 reflective tape bands, 2 inch minimum width, applied to the pipes as shown in detail. Reflective tape to be 3M "Scotch-Lite" silver reflective safety tape, or equivalent.

3. Permanent style barrier pipes are to be used where possible. Removable barrier pipes are to be used only when specified on SVP project design and construction estimate drawings or when directed by SVP inspectors.

4. Barrier pipes are to be painted safety yellow. Yellow polyethylene sleeves, such as Armorcast's "Guardian Sleeve," may be substituted for painting the pipe.

5. See sheet 12 for barrier pipe placement requirements.

6. Support sleeves for removable barrier pipes shall be 5" galvanized steel schedule 40 standard pipe. A 3/4" x 8" galvanized machine bolt shall be installed 3" from the base of the sleeve to act as a support stop for the 4" removable barrier pipe.

**BARRIER PIPE DETAILS**

| Rev. | Date | Description | Appr. | Rev. | Date | Description | Appr. |
|---|---|---|---|---|---|---|---|
| | | | | | | | |
| | | | | | | | |

| | | |
|---|---|---|
| By: K. Keating | Installation of Underground Substructures by Developers | Drawn By: K. Keating |
| Approved: 06/24/04 | | SHEET 13 of 38 |
| Bob Blankenship | | UG 1000 |
| Bob Streich | | Rev. 5 |

# APPENDIX C

## Sag Data for 954 AAC "Magnolia"

SOUTHWIRE COMPANY
CARROLLTON,GEORGIA
RD01G5

SAG & TENSION DATA
LEVEL, DEAD END SPANS
SAG IN DIRECTION OF RESULTANT

CHART NO:
FILE NO: 40058
DATE: 08/21/06

CONDUCTOR:

954 KCM - 37 STR. AAC "MAGNOLIA"

LOADING DISTRICT:
LIGHT

| STRESS-STRAIN SOURCE | RATED STRENGTH | STRESSED AREA | OVERALL DIAMETER | CREEP TEMP |
|---|---|---|---|---|
| SW-174 | 16400.0 LB | 0.7495 SQ IN | 1.1240 IN | 60.0 F |

INPUT DATA

| TEMP F | ICE IN | WIND PSF | K PF | INITIAL LIMIT | FINAL LIMIT | RESULTANTS LB/FT |
|---|---|---|---|---|---|---|
| 0.0 | 0.00 | 0.00 | 0.00 | | | 0.8958 |
| 10.0 | 0.00 | 0.00 | 0.00 | | | 0.8958 |
| 25.0 | 0.00 | 8.00 | 0.00 | 2900. LB(17.7%) | | 1.1679 |
| 30.0 | 0.00 | 0.00 | 0.00 | | | 0.8958 |
| 40.0 | 0.00 | 0.00 | 0.00 | | | 0.8958 |
| 50.0 | 0.00 | 0.00 | 0.00 | | | 0.8958 |
| 60.0 | 0.00 | 0.00 | 0.00 | | | 0.8958 |
| 60.0 | 0.00 | 0.00 | 0.00 | 5740. LB(35.0%) | | 0.8958 |
| 60.0 | 0.00 | 0.00 | 0.00 | | 4100. LB(25.0%) | 0.8958 |
| 60.0 | 0.00 | 6.00 | 0.00 | | | 1.0575 |
| 60.0 | 0.00 | 9.00 | 0.00 | | | 1.2301 |
| 70.0 | 0.00 | 0.00 | 0.00 | | | 0.8958 |
| 80.0 | 0.00 | 0.00 | 0.00 | | | 0.8958 |
| 90.0 | 0.00 | 0.00 | 0.00 | | | 0.8958 |
| 100.0 | 0.00 | 0.00 | 0.00 | | | 0.8958 |
| 110.0 | 0.00 | 0.00 | 0.00 | | | 0.8958 |
| 120.0 | 0.00 | 0.00 | 0.00 | | | 0.8958 |
| 130.0 | 0.00 | 0.00 | 0.00 | | | 0.8958 |
| 167.0 | 0.00 | 0.00 | 0.00 | | | 0.8958 |
| 176.0 | 0.00 | 0.00 | 0.00 | | | 0.8958 |
| 212.0 | 0.00 | 0.00 | 0.00 | | | 0.8958 |

SAG AND TENSION DATA
SOUTHWIRE COMPANY
DATE 08/21/06

CHART NO:
FILE NO: 40058

954 KCM - 37 STR. AAC "MAGNOLIA"

RULING SPAN = 50.0 FEET
CREEP GOVERNS FINAL SAGS

| TEMP F | ICE IN | WIND PSF | K PF | INITIAL SAG FT | INITIAL TENSION LB | FINAL SAG FT | FINAL TENSION LB |
|---|---|---|---|---|---|---|---|
| 0.0 | | | | 0.06 | 4490 | 0.06 | 4490 |
| 10.0 | | | | 0.07 | 3851 | 0.07 | 3851 |
| 25.0 | 0.00 | 8.0 | 0.00 | 0.13 | 2900* | 0.13 | 2841 |
| 30.0 | | | | 0.11 | 2532 | 0.12 | 2398 |
| 40.0 | | | | 0.15 | 1880 | 0.17 | 1657 |
| 50.0 | | | | 0.22 | 1297 | 0.26 | 1083 |
| 60.0 | | | | 0.32 | 884 | 0.37 | 749 |
| 60.0 | 0.00 | 6.0 | 0.00 | 0.34 | 976 | 0.39 | 845 |
| 60.0 | 0.00 | 9.0 | 0.00 | 0.36 | 1068 | 0.41 | 941 |
| 70.0 | | | | 0.43 | 654 | 0.49 | 577 |
| 80.0 | | | | 0.53 | 526 | 0.58 | 479 |
| 90.0 | | | | 0.63 | 448 | 0.67 | 417 |
| 100.0 | | | | 0.71 | 395 | 0.75 | 372 |
| 110.0 | | | | 0.79 | 357 | 0.83 | 340 |
| 120.0 | | | | 0.86 | 328 | 0.89 | 314 |
| 130.0 | | | | 0.92 | 304 | 0.96 | 293 |
| 167.0 | | | | 1.13 | 248 | 1.16 | 241 |
| 176.0 | | | | 1.18 | 238 | 1.21 | 232 |
| 212.0 | | | | 1.35 | 208 | 1.37 | 205 |

RULING SPAN = 70.0 FEET

CREEP GOVERNS FINAL SAGS

| TEMP F | ICE IN | WIND PSF | K PF | INITIAL SAG FT | INITIAL TENSION LB | FINAL SAG FT | FINAL TENSION LB |
|---|---|---|---|---|---|---|---|
| 0.0 | | | | 0.12 | 4429 | 0.12 | 4429 |
| 10.0 | | | | 0.14 | 3796 | 0.14 | 3796 |
| 25.0 | 0.00 | 8.0 | 0.00 | 0.25 | 2900* | 0.26 | 2716 |
| 30.0 | | | | 0.22 | 2513 | 0.24 | 2257 |
| 40.0 | | | | 0.29 | 1908 | 0.34 | 1614 |
| 50.0 | | | | 0.39 | 1400 | 0.47 | 1159 |
| 60.0 | | | | 0.53 | 1044 | 0.62 | 886 |
| 60.0 | 0.00 | 6.0 | 0.00 | 0.56 | 1159 | 0.65 | 1004 |
| 60.0 | 0.00 | 9.0 | 0.00 | 0.59 | 1275 | 0.67 | 1124 |
| 70.0 | | | | 0.67 | 825 | 0.76 | 725 |
| 80.0 | | | | 0.80 | 689 | 0.88 | 622 |
| 90.0 | | | | 0.92 | 598 | 1.00 | 550 |
| 100.0 | | | | 1.03 | 534 | 1.10 | 498 |
| 110.0 | | | | 1.13 | 486 | 1.20 | 458 |
| 120.0 | | | | 1.23 | 448 | 1.29 | 426 |
| 130.0 | | | | 1.32 | 418 | 1.38 | 399 |
| 167.0 | | | | 1.61 | 343 | 1.66 | 332 |
| 176.0 | | | | 1.67 | 330 | 1.72 | 320 |
| 212.0 | | | | 1.90 | 289 | 1.95 | 283 |

RULING SPAN = 100.0 FEET

CREEP GOVERNS FINAL SAGS

| TEMP F | ICE IN | WIND PSF | K PF | INITIAL SAG FT | INITIAL TENSION LB | FINAL SAG FT | FINAL TENSION LB |
|---|---|---|---|---|---|---|---|
| 0.0 | | | | 0.26 | 4306 | 0.26 | 4283 |
| 10.0 | | | | 0.30 | 3687 | 0.32 | 3498 |
| 25.0 | 0.00 | 8.0 | 0.00 | 0.50 | 2900* | 0.56 | 2603 |
| 30.0 | | | | 0.45 | 2480 | 0.53 | 2119 |
| 40.0 | | | | 0.57 | 1954 | 0.69 | 1622 |
| 50.0 | | | | 0.73 | 1536 | 0.87 | 1282 |
| 60.0 | | | | 0.90 | 1238 | 1.06 | 1060 |
| 60.0 | 0.00 | 6.0 | 0.00 | 0.96 | 1384 | 1.10 | 1207 |
| 60.0 | 0.00 | 9.0 | 0.00 | 1.00 | 1531 | 1.13 | 1356 |
| 70.0 | | | | 1.08 | 1037 | 1.23 | 911 |
| 80.0 | | | | 1.25 | 897 | 1.39 | 806 |
| 90.0 | | | | 1.41 | 797 | 1.54 | 728 |
| 100.0 | | | | 1.55 | 722 | 1.68 | 668 |
| 110.0 | | | | 1.69 | 664 | 1.81 | 620 |
| 120.0 | | | | 1.82 | 617 | 1.93 | 581 |
| 130.0 | | | | 1.94 | 579 | 2.05 | 548 |
| 167.0 | | | | 2.34 | 480 | 2.43 | 462 |
| 176.0 | | | | 2.43 | 463 | 2.52 | 446 |
| 212.0 | | | | 2.76 | 408 | 2.84 | 396 |

RULING SPAN = 150.0 FEET

CREEP GOVERNS FINAL SAGS

| TEMP F | ICE IN | WIND PSF | K PF | INITIAL SAG FT | INITIAL TENSION LB | FINAL SAG FT | FINAL TENSION LB |
|---|---|---|---|---|---|---|---|
| 0.0 | | | | 0.63 | 4022 | 0.68 | 3715 |
| 10.0 | | | | 0.73 | 3448 | 0.83 | 3045 |
| 25.0 | 0.00 | 8.0 | 0.00 | 1.13 | 2900* | 1.29 | 2546 |
| 30.0 | | | | 1.04 | 2422 | 1.24 | 2028 |
| 40.0 | | | | 1.25 | 2022 | 1.48 | 1698 |
| 50.0 | | | | 1.47 | 1711 | 1.73 | 1460 |
| 60.0 | | | | 1.70 | 1479 | 1.96 | 1287 |
| 60.0 | 0.00 | 6.0 | 0.00 | 1.78 | 1668 | 2.02 | 1474 |
| 60.0 | 0.00 | 9.0 | 0.00 | 1.86 | 1859 | 2.08 | 1666 |
| 70.0 | | | | 1.93 | 1305 | 2.18 | 1157 |
| 80.0 | | | | 2.15 | 1173 | 2.39 | 1056 |
| 90.0 | | | | 2.36 | 1071 | 2.59 | 976 |
| 100.0 | | | | 2.55 | 989 | 2.77 | 911 |
| 110.0 | | | | 2.74 | 922 | 2.95 | 856 |
| 120.0 | | | | 2.92 | 866 | 3.12 | 810 |
| 130.0 | | | | 3.08 | 819 | 3.28 | 770 |
| 167.0 | | | | 3.65 | 692 | 3.82 | 661 |
| 176.0 | | | | 3.78 | 669 | 3.94 | 641 |
| 212.0 | | | | 4.25 | 595 | 4.40 | 575 |

RULING SPAN = 167.0 FEET

CREEP GOVERNS FINAL SAGS

| TEMP F | ICE IN | WIND PSF | K PF | INITIAL SAG FT | INITIAL TENSION LB | FINAL SAG FT | FINAL TENSION LB |
|---|---|---|---|---|---|---|---|
| 0.0 | | | | 0.80 | 3910 | 0.88 | 3536 |
| 10.0 | | | | 0.93 | 3358 | 1.07 | 2920 |
| 25.0 | 0.00 | 8.0 | 0.00 | 1.40 | 2900* | 1.60 | 2546 |
| 30.0 | | | | 1.30 | 2404 | 1.55 | 2019 |
| 40.0 | | | | 1.53 | 2041 | 1.81 | 1728 |
| 50.0 | | | | 1.78 | 1758 | 2.07 | 1513 |
| 60.0 | | | | 2.03 | 1543 | 2.31 | 1351 |
| 60.0 | 0.00 | 6.0 | 0.00 | 2.11 | 1745 | 2.38 | 1550 |
| 60.0 | 0.00 | 9.0 | 0.00 | 2.20 | 1949 | 2.45 | 1754 |
| 70.0 | | | | 2.27 | 1379 | 2.55 | 1227 |
| 80.0 | | | | 2.50 | 1251 | 2.77 | 1128 |
| 90.0 | | | | 2.72 | 1149 | 2.98 | 1049 |
| 100.0 | | | | 2.93 | 1067 | 3.18 | 983 |
| 110.0 | | | | 3.13 | 999 | 3.37 | 928 |
| 120.0 | | | | 3.32 | 941 | 3.56 | 880 |
| 130.0 | | | | 3.51 | 892 | 3.73 | 839 |
| 167.0 | | | | 4.13 | 759 | 4.33 | 725 |
| 176.0 | | | | 4.27 | 735 | 4.46 | 703 |
| 212.0 | | | | 4.78 | 656 | 4.96 | 633 |

RULING SPAN = 184.0 FEET

CREEP GOVERNS FINAL SAGS

| TEMP F | ICE IN | WIND PSF | K PF | INITIAL SAG FT | INITIAL TENSION LB | FINAL SAG FT | FINAL TENSION LB |
|---|---|---|---|---|---|---|---|
| 0.0 | | | | 1.00 | 3794 | 1.12 | 3371 |
| 10.0 | | | | 1.16 | 3268 | 1.35 | 2813 |
| 25.0 | 0.00 | 8.0 | 0.00 | 1.71 | 2900* | 1.94 | 2552 |
| 30.0 | | | | 1.59 | 2387 | 1.88 | 2017 |
| 40.0 | | | | 1.84 | 2058 | 2.16 | 1757 |
| 50.0 | | | | 2.11 | 1800 | 2.43 | 1561 |
| 60.0 | | | | 2.37 | 1601 | 2.69 | 1410 |
| 60.0 | 0.00 | 6.0 | 0.00 | 2.47 | 1814 | 2.77 | 1620 |
| 60.0 | 0.00 | 9.0 | 0.00 | 2.57 | 2030 | 2.84 | 1835 |
| 70.0 | | | | 2.63 | 1445 | 2.94 | 1291 |
| 80.0 | | | | 2.87 | 1321 | 3.18 | 1195 |
| 90.0 | | | | 3.11 | 1221 | 3.40 | 1117 |
| 100.0 | | | | 3.33 | 1139 | 3.61 | 1051 |
| 110.0 | | | | 3.55 | 1071 | 3.82 | 995 |
| 120.0 | | | | 3.75 | 1012 | 4.01 | 947 |
| 130.0 | | | | 3.95 | 962 | 4.20 | 904 |
| 167.0 | | | | 4.62 | 824 | 4.84 | 786 |
| 176.0 | | | | 4.77 | 798 | 4.99 | 763 |
| 212.0 | | | | 5.33 | 714 | 5.53 | 689 |

RULING SPAN = 190.0 FEET

CREEP GOVERNS FINAL SAGS

| TEMP F | ICE IN | WIND PSF | K PF | INITIAL SAG FT | INITIAL TENSION LB | FINAL SAG FT | FINAL TENSION LB |
|---|---|---|---|---|---|---|---|
| 0.0 | | | | 1.08 | 3752 | 1.22 | 3316 |
| 10.0 | | | | 1.25 | 3237 | 1.46 | 2779 |
| 25.0 | 0.00 | 8.0 | 0.00 | 1.82 | 2900* | 2.06 | 2555 |
| 30.0 | | | | 1.70 | 2382 | 2.01 | 2017 |
| 40.0 | | | | 1.96 | 2064 | 2.29 | 1767 |
| 50.0 | | | | 2.23 | 1814 | 2.57 | 1577 |
| 60.0 | | | | 2.50 | 1619 | 2.83 | 1429 |
| 60.0 | 0.00 | 6.0 | 0.00 | 2.60 | 1837 | 2.91 | 1643 |
| 60.0 | 0.00 | 9.0 | 0.00 | 2.70 | 2058 | 2.98 | 1862 |
| 70.0 | | | | 2.76 | 1466 | 3.08 | 1312 |
| 80.0 | | | | 3.01 | 1345 | 3.32 | 1218 |
| 90.0 | | | | 3.25 | 1246 | 3.55 | 1140 |
| 100.0 | | | | 3.48 | 1164 | 3.77 | 1074 |
| 110.0 | | | | 3.70 | 1095 | 3.98 | 1018 |
| 120.0 | | | | 3.91 | 1036 | 4.18 | 969 |
| 130.0 | | | | 4.11 | 986 | 4.37 | 927 |
| 167.0 | | | | 4.80 | 846 | 5.03 | 806 |
| 176.0 | | | | 4.95 | 820 | 5.18 | 784 |
| 212.0 | | | | 5.53 | 734 | 5.74 | 708 |

RULING SPAN = 192.0 FEET

CREEP GOVERNS FINAL SAGS

| TEMP F | ICE IN | WIND PSF | K PF | INITIAL SAG FT | INITIAL TENSION LB | FINAL SAG FT | FINAL TENSION LB |
|---|---|---|---|---|---|---|---|
| 0.0 | | | | 1.10 | 3738 | 1.25 | 3298 |
| 10.0 | | | | 1.28 | 3226 | 1.49 | 2768 |
| 25.0 | 0.00 | 8.0 | 0.00 | 1.86 | 2900* | 2.11 | 2556 |
| 30.0 | | | | 1.74 | 2380 | 2.05 | 2017 |
| 40.0 | | | | 2.00 | 2065 | 2.33 | 1770 |
| 50.0 | | | | 2.27 | 1818 | 2.61 | 1582 |
| 60.0 | | | | 2.54 | 1625 | 2.88 | 1436 |
| 60.0 | 0.00 | 6.0 | 0.00 | 2.64 | 1844 | 2.96 | 1651 |
| 60.0 | 0.00 | 9.0 | 0.00 | 2.75 | 2066 | 3.03 | 1871 |
| 70.0 | | | | 2.80 | 1474 | 3.13 | 1319 |
| 80.0 | | | | 3.06 | 1352 | 3.37 | 1225 |
| 90.0 | | | | 3.30 | 1253 | 3.61 | 1147 |
| 100.0 | | | | 3.53 | 1172 | 3.83 | 1081 |
| 110.0 | | | | 3.75 | 1103 | 4.04 | 1025 |
| 120.0 | | | | 3.96 | 1044 | 4.24 | 977 |
| 130.0 | | | | 4.17 | 994 | 4.43 | 934 |
| 167.0 | | | | 4.86 | 853 | 5.09 | 813 |
| 176.0 | | | | 5.01 | 827 | 5.24 | 790 |
| 212.0 | | | | 5.59 | 741 | 5.81 | 714 |

RULING SPAN = 199.0 FEET

CREEP GOVERNS FINAL SAGS

| TEMP F | ICE IN | WIND PSF | K PF | INITIAL SAG FT | INITIAL TENSION LB | FINAL SAG FT | FINAL TENSION LB |
|---|---|---|---|---|---|---|---|
| 0.0 | | | | 1.20 | 3689 | 1.37 | 3238 |
| 10.0 | | | | 1.39 | 3190 | 1.62 | 2731 |
| 25.0 | 0.00 | 8.0 | 0.00 | 1.99 | 2900* | 2.26 | 2560 |
| 30.0 | | | | 1.87 | 2374 | 2.20 | 2018 |
| 40.0 | | | | 2.14 | 2072 | 2.49 | 1781 |
| 50.0 | | | | 2.42 | 1833 | 2.77 | 1600 |
| 60.0 | | | | 2.70 | 1646 | 3.05 | 1457 |
| 60.0 | 0.00 | 6.0 | 0.00 | 2.80 | 1870 | 3.13 | 1677 |
| 60.0 | 0.00 | 9.0 | 0.00 | 2.91 | 2096 | 3.21 | 1902 |
| 70.0 | | | | 2.96 | 1498 | 3.31 | 1343 |
| 80.0 | | | | 3.22 | 1378 | 3.55 | 1250 |
| 90.0 | | | | 3.47 | 1280 | 3.79 | 1173 |
| 100.0 | | | | 3.70 | 1199 | 4.01 | 1107 |
| 110.0 | | | | 3.93 | 1130 | 4.23 | 1051 |
| 120.0 | | | | 4.15 | 1071 | 4.44 | 1002 |
| 130.0 | | | | 4.36 | 1020 | 4.64 | 959 |
| 167.0 | | | | 5.07 | 878 | 5.32 | 837 |
| 176.0 | | | | 5.23 | 852 | 5.47 | 814 |
| 212.0 | | | | 5.83 | 764 | 6.05 | 736 |

RULING SPAN = 200.0 FEET

CREEP GOVERNS FINAL SAGS

| TEMP F | ICE IN | WIND PSF | K PF | INITIAL SAG FT | INITIAL TENSION LB | FINAL SAG FT | FINAL TENSION LB |
|---|---|---|---|---|---|---|---|
| 0.0 | | | | 1.22 | 3682 | 1.39 | 3229 |
| 10.0 | | | | 1.41 | 3185 | 1.64 | 2726 |
| 25.0 | 0.00 | 8.0 | 0.00 | 2.01 | 2900* | 2.28 | 2561 |
| 30.0 | | | | 1.89 | 2373 | 2.22 | 2018 |
| 40.0 | | | | 2.16 | 2073 | 2.51 | 1783 |
| 50.0 | | | | 2.44 | 1835 | 2.80 | 1602 |
| 60.0 | | | | 2.72 | 1649 | 3.07 | 1460 |
| 60.0 | 0.00 | 6.0 | 0.00 | 2.83 | 1873 | 3.15 | 1680 |
| 60.0 | 0.00 | 9.0 | 0.00 | 2.93 | 2100 | 3.23 | 1906 |
| 70.0 | | | | 2.99 | 1501 | 3.33 | 1347 |
| 80.0 | | | | 3.25 | 1382 | 3.58 | 1254 |
| 90.0 | | | | 3.49 | 1284 | 3.81 | 1176 |
| 100.0 | | | | 3.73 | 1203 | 4.04 | 1111 |
| 110.0 | | | | 3.96 | 1134 | 4.26 | 1055 |
| 120.0 | | | | 4.18 | 1075 | 4.46 | 1006 |
| 130.0 | | | | 4.38 | 1024 | 4.66 | 963 |
| 167.0 | | | | 5.10 | 882 | 5.35 | 841 |
| 176.0 | | | | 5.26 | 855 | 5.50 | 817 |
| 212.0 | | | | 5.86 | 768 | 6.09 | 740 |

RULING SPAN = 203.0 FEET

CREEP GOVERNS FINAL SAGS

| TEMP F | ICE IN | WIND PSF | K PF | INITIAL SAG FT | INITIAL TENSION LB | FINAL SAG FT | FINAL TENSION LB |
|---|---|---|---|---|---|---|---|
| 0.0 | | | | 1.26 | 3661 | 1.44 | 3205 |
| 10.0 | | | | 1.46 | 3170 | 1.70 | 2711 |
| 25.0 | 0.00 | 8.0 | 0.00 | 2.08 | 2900* | 2.35 | 2563 |
| 30.0 | | | | 1.95 | 2370 | 2.29 | 2018 |
| 40.0 | | | | 2.23 | 2075 | 2.58 | 1788 |
| 50.0 | | | | 2.51 | 1842 | 2.87 | 1610 |
| 60.0 | | | | 2.79 | 1658 | 3.14 | 1469 |
| 60.0 | 0.00 | 6.0 | 0.00 | 2.90 | 1884 | 3.23 | 1691 |
| 60.0 | 0.00 | 9.0 | 0.00 | 3.00 | 2113 | 3.31 | 1919 |
| 70.0 | | | | 3.06 | 1511 | 3.41 | 1357 |
| 80.0 | | | | 3.32 | 1393 | 3.66 | 1264 |
| 90.0 | | | | 3.57 | 1295 | 3.89 | 1187 |
| 100.0 | | | | 3.81 | 1214 | 4.12 | 1122 |
| 110.0 | | | | 4.04 | 1146 | 4.34 | 1066 |
| 120.0 | | | | 4.26 | 1087 | 4.55 | 1017 |
| 130.0 | | | | 4.47 | 1036 | 4.75 | 974 |
| 167.0 | | | | 5.19 | 893 | 5.44 | 851 |
| 176.0 | | | | 5.35 | 866 | 5.60 | 827 |
| 212.0 | | | | 5.96 | 778 | 6.19 | 749 |

RULING SPAN = 209.0 FEET

CREEP GOVERNS FINAL SAGS

| TEMP F | ICE IN | WIND PSF | K PF | INITIAL SAG FT | INITIAL TENSION LB | FINAL SAG FT | FINAL TENSION LB |
|---|---|---|---|---|---|---|---|
| 0.0 | | | | 1.35 | 3620 | 1.55 | 3157 |
| 10.0 | | | | 1.56 | 3140 | 1.82 | 2683 |
| 25.0 | 0.00 | 8.0 | 0.00 | 2.20 | 2900* | 2.49 | 2567 |
| 30.0 | | | | 2.07 | 2365 | 2.42 | 2020 |
| 40.0 | | | | 2.35 | 2080 | 2.72 | 1797 |
| 50.0 | | | | 2.64 | 1854 | 3.01 | 1624 |
| 60.0 | | | | 2.92 | 1674 | 3.29 | 1487 |
| 60.0 | 0.00 | 6.0 | 0.00 | 3.04 | 1904 | 3.38 | 1712 |
| 60.0 | 0.00 | 9.0 | 0.00 | 3.15 | 2137 | 3.46 | 1943 |
| 70.0 | | | | 3.20 | 1530 | 3.56 | 1376 |
| 80.0 | | | | 3.46 | 1414 | 3.81 | 1285 |
| 90.0 | | | | 3.72 | 1318 | 4.06 | 1208 |
| 100.0 | | | | 3.96 | 1237 | 4.29 | 1143 |
| 110.0 | | | | 4.20 | 1168 | 4.51 | 1087 |
| 120.0 | | | | 4.42 | 1109 | 4.73 | 1038 |
| 130.0 | | | | 4.64 | 1058 | 4.93 | 995 |
| 167.0 | | | | 5.37 | 914 | 5.64 | 871 |
| 176.0 | | | | 5.54 | 886 | 5.80 | 847 |
| 212.0 | | | | 6.16 | 797 | 6.40 | 768 |

RULING SPAN = 229.0 FEET

CREEP GOVERNS FINAL SAGS

| TEMP F | ICE IN | WIND PSF | K PF | INITIAL SAG FT | INITIAL TENSION LB | FINAL SAG FT | FINAL TENSION LB |
|---|---|---|---|---|---|---|---|
| 0.0 | | | | 1.69 | 3483 | 1.95 | 3013 |
| 10.0 | | | | 1.93 | 3043 | 2.26 | 2602 |
| 25.0 | 0.00 | 8.0 | 0.00 | 2.64 | 2900* | 2.97 | 2581 |
| 30.0 | | | | 2.50 | 2350 | 2.90 | 2026 |
| 40.0 | | | | 2.81 | 2095 | 3.22 | 1828 |
| 50.0 | | | | 3.11 | 1890 | 3.52 | 1670 |
| 60.0 | | | | 3.41 | 1725 | 3.81 | 1543 |
| 60.0 | 0.00 | 6.0 | 0.00 | 3.53 | 1967 | 3.90 | 1779 |
| 60.0 | 0.00 | 9.0 | 0.00 | 3.65 | 2212 | 4.00 | 2021 |
| 70.0 | | | | 3.70 | 1591 | 4.09 | 1438 |
| 80.0 | | | | 3.98 | 1479 | 4.36 | 1350 |
| 90.0 | | | | 4.24 | 1386 | 4.61 | 1275 |
| 100.0 | | | | 4.50 | 1307 | 4.86 | 1211 |
| 110.0 | | | | 4.75 | 1239 | 5.10 | 1155 |
| 120.0 | | | | 4.99 | 1181 | 5.33 | 1106 |
| 130.0 | | | | 5.22 | 1129 | 5.55 | 1062 |
| 167.0 | | | | 6.00 | 982 | 6.30 | 936 |
| 176.0 | | | | 6.18 | 953 | 6.47 | 911 |
| 212.0 | | | | 6.86 | 861 | 7.12 | 829 |

RULING SPAN = 248.0 FEET

CREEP GOVERNS FINAL SAGS

| TEMP F | ICE IN | WIND PSF | K PF | INITIAL SAG FT | INITIAL TENSION LB | FINAL SAG FT | FINAL TENSION LB |
|---|---|---|---|---|---|---|---|
| 0.0 | | | | 2.05 | 3359 | 2.38 | 2897 |
| 10.0 | | | | 2.33 | 2959 | 2.71 | 2540 |
| 25.0 | 0.00 | 8.0 | 0.00 | 3.10 | 2900* | 3.46 | 2596 |
| 30.0 | | | | 2.95 | 2337 | 3.39 | 2033 |
| 40.0 | | | | 3.27 | 2108 | 3.72 | 1854 |
| 50.0 | | | | 3.59 | 1921 | 4.03 | 1709 |
| 60.0 | | | | 3.90 | 1768 | 4.34 | 1590 |
| 60.0 | 0.00 | 6.0 | 0.00 | 4.03 | 2020 | 4.44 | 1836 |
| 60.0 | 0.00 | 9.0 | 0.00 | 4.16 | 2277 | 4.53 | 2089 |
| 70.0 | | | | 4.20 | 1642 | 4.63 | 1491 |
| 80.0 | | | | 4.49 | 1536 | 4.91 | 1406 |
| 90.0 | | | | 4.77 | 1446 | 5.18 | 1334 |
| 100.0 | | | | 5.04 | 1369 | 5.43 | 1271 |
| 110.0 | | | | 5.30 | 1302 | 5.68 | 1215 |
| 120.0 | | | | 5.55 | 1244 | 5.92 | 1166 |
| 130.0 | | | | 5.80 | 1192 | 6.15 | 1123 |
| 167.0 | | | | 6.63 | 1043 | 6.96 | 994 |
| 176.0 | | | | 6.82 | 1014 | 7.14 | 969 |
| 212.0 | | | | 7.54 | 918 | 7.83 | 884 |

RULING SPAN = 250.0 FEET

CREEP GOVERNS FINAL SAGS

| TEMP F | ICE IN | WIND PSF | K PF | INITIAL SAG FT | INITIAL TENSION LB | FINAL SAG FT | FINAL TENSION LB |
|---|---|---|---|---|---|---|---|
| 0.0 | | | | 2.09 | 3346 | 2.43 | 2886 |
| 10.0 | | | | 2.37 | 2950 | 2.76 | 2534 |
| 25.0 | 0.00 | 8.0 | 0.00 | 3.15 | 2900* | 3.52 | 2598 |
| 30.0 | | | | 3.00 | 2336 | 3.44 | 2034 |
| 40.0 | | | | 3.32 | 2109 | 3.77 | 1857 |
| 50.0 | | | | 3.64 | 1924 | 4.09 | 1713 |
| 60.0 | | | | 3.95 | 1772 | 4.39 | 1595 |
| 60.0 | 0.00 | 6.0 | 0.00 | 4.09 | 2025 | 4.49 | 1842 |
| 60.0 | 0.00 | 9.0 | 0.00 | 4.22 | 2283 | 4.59 | 2096 |
| 70.0 | | | | 4.26 | 1647 | 4.69 | 1496 |
| 80.0 | | | | 4.55 | 1541 | 4.97 | 1412 |
| 90.0 | | | | 4.83 | 1452 | 5.24 | 1340 |
| 100.0 | | | | 5.10 | 1375 | 5.50 | 1277 |
| 110.0 | | | | 5.36 | 1308 | 5.75 | 1222 |
| 120.0 | | | | 5.61 | 1250 | 5.99 | 1173 |
| 130.0 | | | | 5.86 | 1198 | 6.22 | 1129 |
| 167.0 | | | | 6.70 | 1049 | 7.03 | 1000 |
| 176.0 | | | | 6.89 | 1020 | 7.21 | 975 |
| 212.0 | | | | 7.61 | 924 | 7.91 | 890 |

RULING SPAN = 275.0 FEET

CREEP GOVERNS FINAL SAGS

| TEMP F | ICE IN | WIND PSF | K PF | INITIAL SAG FT | INITIAL TENSION LB | FINAL SAG FT | FINAL TENSION LB |
|---|---|---|---|---|---|---|---|
| 0.0 | | | | 2.65 | 3197 | 3.06 | 2765 |
| 10.0 | | | | 2.97 | 2852 | 3.43 | 2471 |
| 25.0 | 0.00 | 8.0 | 0.00 | 3.81 | 2900* | 4.22 | 2617 |
| 30.0 | | | | 3.65 | 2322 | 4.15 | 2045 |
| 40.0 | | | | 3.99 | 2123 | 4.49 | 1889 |
| 50.0 | | | | 4.33 | 1958 | 4.82 | 1760 |
| 60.0 | | | | 4.66 | 1821 | 5.14 | 1651 |
| 60.0 | 0.00 | 6.0 | 0.00 | 4.80 | 2087 | 5.25 | 1910 |
| 60.0 | 0.00 | 9.0 | 0.00 | 4.94 | 2357 | 5.35 | 2176 |
| 70.0 | | | | 4.97 | 1705 | 5.44 | 1559 |
| 80.0 | | | | 5.28 | 1607 | 5.74 | 1479 |
| 90.0 | | | | 5.58 | 1522 | 6.02 | 1410 |
| 100.0 | | | | 5.86 | 1448 | 6.30 | 1349 |
| 110.0 | | | | 6.14 | 1383 | 6.56 | 1295 |
| 120.0 | | | | 6.41 | 1326 | 6.82 | 1246 |
| 130.0 | | | | 6.67 | 1274 | 7.07 | 1203 |
| 167.0 | | | | 7.56 | 1125 | 7.93 | 1073 |
| 176.0 | | | | 7.76 | 1095 | 8.12 | 1047 |
| 212.0 | | | | 8.54 | 997 | 8.87 | 960 |

RULING SPAN = 300.0 FEET

CREEP GOVERNS FINAL SAGS

| TEMP F | ICE IN | WIND PSF | K PF | INITIAL SAG FT | INITIAL TENSION LB | FINAL SAG FT | FINAL TENSION LB |
|---|---|---|---|---|---|---|---|
| 0.0 | | | | 3.29 | 3066 | 3.78 | 2671 |
| 10.0 | | | | 3.64 | 2769 | 4.16 | 2424 |
| 25.0 | 0.00 | 8.0 | 0.00 | 4.54 | 2900* | 4.99 | 2637 |
| 30.0 | | | | 4.37 | 2310 | 4.91 | 2056 |
| 40.0 | | | | 4.73 | 2135 | 5.26 | 1918 |
| 50.0 | | | | 5.08 | 1988 | 5.61 | 1801 |
| 60.0 | | | | 5.42 | 1863 | 5.94 | 1701 |
| 60.0 | 0.00 | 6.0 | 0.00 | 5.57 | 2140 | 6.05 | 1970 |
| 60.0 | 0.00 | 9.0 | 0.00 | 5.72 | 2423 | 6.17 | 2248 |
| 70.0 | | | | 5.75 | 1757 | 6.26 | 1615 |
| 80.0 | | | | 6.07 | 1664 | 6.56 | 1539 |
| 90.0 | | | | 6.38 | 1584 | 6.86 | 1473 |
| 100.0 | | | | 6.68 | 1513 | 7.15 | 1414 |
| 110.0 | | | | 6.97 | 1451 | 7.43 | 1361 |
| 120.0 | | | | 7.25 | 1395 | 7.70 | 1314 |
| 130.0 | | | | 7.52 | 1344 | 7.96 | 1271 |
| 167.0 | | | | 8.47 | 1195 | 8.87 | 1141 |
| 176.0 | | | | 8.69 | 1165 | 9.08 | 1115 |
| 212.0 | | | | 9.51 | 1065 | 9.88 | 1026 |

RULING SPAN = 325.0 FEET

CREEP GOVERNS FINAL SAGS

| TEMP F | ICE IN | WIND PSF | K PF | INITIAL SAG FT | INITIAL TENSION LB | FINAL SAG FT | FINAL TENSION LB |
|---|---|---|---|---|---|---|---|
| 0.0 | | | | 4.01 | 2953 | 4.56 | 2597 |
| 10.0 | | | | 4.39 | 2698 | 4.96 | 2387 |
| 25.0 | 0.00 | 8.0 | 0.00 | 5.32 | 2900* | 5.82 | 2656 |
| 30.0 | | | | 5.15 | 2299 | 5.73 | 2067 |
| 40.0 | | | | 5.52 | 2145 | 6.10 | 1944 |
| 50.0 | | | | 5.89 | 2013 | 6.45 | 1837 |
| 60.0 | | | | 6.24 | 1900 | 6.79 | 1745 |
| 60.0 | 0.00 | 6.0 | 0.00 | 6.40 | 2186 | 6.91 | 2024 |
| 60.0 | 0.00 | 9.0 | 0.00 | 6.56 | 2480 | 7.04 | 2313 |
| 70.0 | | | | 6.58 | 1801 | 7.12 | 1665 |
| 80.0 | | | | 6.91 | 1715 | 7.44 | 1594 |
| 90.0 | | | | 7.23 | 1639 | 7.75 | 1530 |
| 100.0 | | | | 7.55 | 1572 | 8.05 | 1474 |
| 110.0 | | | | 7.85 | 1512 | 8.34 | 1423 |
| 120.0 | | | | 8.14 | 1457 | 8.63 | 1376 |
| 130.0 | | | | 8.43 | 1408 | 8.90 | 1334 |
| 167.0 | | | | 9.43 | 1260 | 9.86 | 1205 |
| 176.0 | | | | 9.65 | 1231 | 10.08 | 1179 |
| 212.0 | | | | 10.53 | 1130 | 10.93 | 1089 |

RULING SPAN = 350.0 FEET

CREEP GOVERNS FINAL SAGS

| TEMP F | ICE IN | WIND PSF | K PF | INITIAL SAG FT | INITIAL TENSION LB | FINAL SAG FT | FINAL TENSION LB |
|---|---|---|---|---|---|---|---|
| 0.0 | | | | 4.80 | 2858 | 5.41 | 2538 |
| 10.0 | | | | 5.21 | 2638 | 5.82 | 2359 |
| 25.0 | 0.00 | 8.0 | 0.00 | 6.18 | 2900* | 6.70 | 2673 |
| 30.0 | | | | 6.00 | 2291 | 6.61 | 2078 |
| 40.0 | | | | 6.38 | 2154 | 6.99 | 1967 |
| 50.0 | | | | 6.75 | 2035 | 7.35 | 1870 |
| 60.0 | | | | 7.12 | 1931 | 7.70 | 1785 |
| 60.0 | 0.00 | 6.0 | 0.00 | 7.29 | 2227 | 7.83 | 2073 |
| 60.0 | 0.00 | 9.0 | 0.00 | 7.46 | 2531 | 7.97 | 2371 |
| 70.0 | | | | 7.47 | 1841 | 8.05 | 1710 |
| 80.0 | | | | 7.81 | 1760 | 8.38 | 1643 |
| 90.0 | | | | 8.15 | 1689 | 8.70 | 1583 |
| 100.0 | | | | 8.47 | 1625 | 9.01 | 1528 |
| 110.0 | | | | 8.78 | 1567 | 9.31 | 1479 |
| 120.0 | | | | 9.09 | 1514 | 9.61 | 1434 |
| 130.0 | | | | 9.39 | 1467 | 9.89 | 1392 |
| 167.0 | | | | 10.43 | 1321 | 10.90 | 1265 |
| 176.0 | | | | 10.67 | 1292 | 11.13 | 1239 |
| 212.0 | | | | 11.59 | 1190 | 12.02 | 1148 |

RULING SPAN = 375.0 FEET

CREEP GOVERNS FINAL SAGS

| TEMP F | ICE IN | WIND PSF | K PF | INITIAL SAG FT | INITIAL TENSION LB | FINAL SAG FT | FINAL TENSION LB |
|---|---|---|---|---|---|---|---|
| 0.0 | | | | 5.68 | 2778 | 6.33 | 2492 |
| 10.0 | | | | 6.09 | 2588 | 6.75 | 2337 |
| 25.0 | 0.00 | 8.0 | 0.00 | 7.09 | 2900* | 7.65 | 2689 |
| 30.0 | | | | 6.91 | 2284 | 7.56 | 2088 |
| 40.0 | | | | 7.30 | 2161 | 7.94 | 1988 |
| 50.0 | | | | 7.68 | 2054 | 8.31 | 1899 |
| 60.0 | | | | 8.06 | 1959 | 8.67 | 1820 |
| 60.0 | 0.00 | 6.0 | 0.00 | 8.23 | 2263 | 8.81 | 2116 |
| 60.0 | 0.00 | 9.0 | 0.00 | 8.42 | 2576 | 8.95 | 2424 |
| 70.0 | | | | 8.42 | 1875 | 9.02 | 1750 |
| 80.0 | | | | 8.77 | 1800 | 9.37 | 1687 |
| 90.0 | | | | 9.12 | 1733 | 9.70 | 1630 |
| 100.0 | | | | 9.45 | 1672 | 10.02 | 1578 |
| 110.0 | | | | 9.78 | 1617 | 10.33 | 1530 |
| 120.0 | | | | 10.09 | 1566 | 10.64 | 1487 |
| 130.0 | | | | 10.40 | 1520 | 10.94 | 1446 |
| 167.0 | | | | 11.49 | 1378 | 11.99 | 1321 |
| 176.0 | | | | 11.74 | 1349 | 12.23 | 1295 |
| 212.0 | | | | 12.70 | 1248 | 13.16 | 1204 |

RULING SPAN = 400.0 FEET

CREEP GOVERNS FINAL SAGS

| TEMP F | ICE IN | WIND PSF | K PF | INITIAL SAG FT | INITIAL TENSION LB | FINAL SAG FT | FINAL TENSION LB |
|---|---|---|---|---|---|---|---|
| 0.0 | | | | 6.62 | 2710 | 7.31 | 2454 |
| 10.0 | | | | 7.05 | 2546 | 7.74 | 2319 |
| 25.0 | 0.00 | 8.0 | 0.00 | 8.07 | 2900* | 8.66 | 2704 |
| 30.0 | | | | 7.88 | 2277 | 8.56 | 2098 |
| 40.0 | | | | 8.29 | 2167 | 8.95 | 2006 |
| 50.0 | | | | 8.68 | 2070 | 9.33 | 1925 |
| 60.0 | | | | 9.06 | 1983 | 9.70 | 1852 |
| 60.0 | 0.00 | 6.0 | 0.00 | 9.24 | 2295 | 9.84 | 2155 |
| 60.0 | 0.00 | 9.0 | 0.00 | 9.43 | 2616 | 9.99 | 2471 |
| 70.0 | | | | 9.43 | 1906 | 10.06 | 1787 |
| 80.0 | | | | 9.79 | 1836 | 10.41 | 1727 |
| 90.0 | | | | 10.14 | 1772 | 10.75 | 1673 |
| 100.0 | | | | 10.49 | 1715 | 11.08 | 1623 |
| 110.0 | | | | 10.82 | 1662 | 11.41 | 1577 |
| 120.0 | | | | 11.15 | 1614 | 11.72 | 1535 |
| 130.0 | | | | 11.47 | 1569 | 12.03 | 1496 |
| 167.0 | | | | 12.59 | 1430 | 13.12 | 1373 |
| 176.0 | | | | 12.85 | 1401 | 13.38 | 1347 |
| 212.0 | | | | 13.85 | 1301 | 14.35 | 1257 |

SOUTHWIRE COMPANY
CARROLLTON, GEORGIA

STRINGING TABLE
(CATENARY METHOD)

CHART NO: S- 1
FILE NO: 40058
DATE: 08/21/06

RULING SPAN = 70.0 FT

LOADING DISTRICT: LIGHT

CONDUCTOR: 954 KCM - 37 STR. AAC "MAGNOLIA"

NOTE: FOR STRINGING CALCULATIONS, THE HORIZONTAL TENSION OF THE RULING SPAN IS HELD CONSTANT (FOR EACH PARTICULAR TEMPERATURE) IN ORDER TO CALCULATE STRINGING SAGS FOR THE OTHER SPANS. THE FINAL DATA IS TO BE USED FOR PRE-STRESSED CABLE ONLY.

SPAN = 67.0 FT

(RULING SPAN = 70.0 FT)

| TEMP | STRINGING SAG | | HORIZONTAL TENSION | FINAL SAG | | HORIZONTAL TENSION |
|---|---|---|---|---|---|---|
| F | FT | IN | LB | FT | IN | LB |
| 0.0 | 0 | 1 | 4429.3 | 0 | 1 | 4429.3 |
| 10.0 | 0 | 2 | 3796.2 | 0 | 2 | 3796.2 |
| 30.0 | 0 | 2 | 2513.4 | 0 | 3 | 2256.8 |
| 40.0 | 0 | 3 | 1908.1 | 0 | 4 | 1614.2 |
| 50.0 | 0 | 4 | 1399.5 | 0 | 5 | 1159.1 |
| 60.0 | 0 | 6 | 1043.9 | 0 | 7 | 886.2 |
| 70.0 | 0 | 7 | 824.6 | 0 | 8 | 724.5 |
| 80.0 | 0 | 9 | 688.2 | 0 | 10 | 621.3 |
| 90.0 | 0 | 10 | 597.7 | 0 | 11 | 550.0 |
| 100.0 | 0 | 11 | 533.4 | 1 | 0 | 497.6 |
| 110.0 | 1 | 0 | 485.3 | 1 | 1 | 457.3 |
| 120.0 | 1 | 1 | 447.7 | 1 | 2 | 425.1 |
| 130.0 | 1 | 2 | 417.4 | 1 | 3 | 398.7 |
| 167.0 | 1 | 6 | 342.0 | 1 | 6 | 331.2 |
| 176.0 | 1 | 6 | 329.0 | 1 | 7 | 319.3 |
| 212.0 | 1 | 9 | 288.6 | 1 | 9 | 281.9 |

SPAN = 70.0 FT (RULING SPAN = 70.0 FT)

S- 1

| TEMP F | STRINGING SAG FT | STRINGING SAG IN | HORIZONTAL TENSION LB | FINAL SAG FT | FINAL SAG IN | HORIZONTAL TENSION LB |
|---|---|---|---|---|---|---|
| 0.0 | 0 | 1 | 4429.3 | 0 | 1 | 4429.3 |
| 10.0 | 0 | 2 | 3796.2 | 0 | 2 | 3796.2 |
| 30.0 | 0 | 3 | 2513.4 | 0 | 3 | 2256.8 |
| 40.0 | 0 | 3 | 1908.1 | 0 | 4 | 1614.2 |
| 50.0 | 0 | 5 | 1399.5 | 0 | 6 | 1159.1 |
| 60.0 | 0 | 6 | 1043.9 | 0 | 7 | 886.2 |
| 70.0 | 0 | 8 | 824.6 | 0 | 9 | 724.5 |
| 80.0 | 0 | 10 | 688.2 | 0 | 11 | 621.3 |
| 90.0 | 0 | 11 | 597.7 | 1 | 0 | 550.0 |
| 100.0 | 1 | 0 | 533.4 | 1 | 1 | 497.6 |
| 110.0 | 1 | 2 | 485.3 | 1 | 2 | 457.3 |
| 120.0 | 1 | 3 | 447.7 | 1 | 3 | 425.1 |
| 130.0 | 1 | 4 | 417.4 | 1 | 5 | 398.7 |
| 167.0 | 1 | 7 | 342.0 | 1 | 8 | 331.2 |
| 176.0 | 1 | 8 | 329.0 | 1 | 9 | 319.3 |
| 212.0 | 1 | 11 | 288.6 | 1 | 11 | 281.9 |

SOUTHWIRE COMPANY
CARROLLTON, GEORGIA

STRINGING TABLE
(CATENARY METHOD)

CHART NO: S- 2
FILE NO: 40058
DATE: 08/21/06

RULING SPAN = 167.0 FT

LOADING DISTRICT: LIGHT

CONDUCTOR: 954 KCM - 37 STR. AAC "MAGNOLIA"

NOTE: FOR STRINGING CALCULATIONS, THE HORIZONTAL TENSION OF THE RULING SPAN IS HELD CONSTANT (FOR EACH PARTICULAR TEMPERATURE) IN ORDER TO CALCULATE STRINGING SAGS FOR THE OTHER SPANS. THE FINAL DATA IS TO BE USED FOR PRE-STRESSED CABLE ONLY.

SPAN = 101.0 FT

(RULING SPAN = 167.0 FT)

| TEMP | STRINGING SAG | | HORIZONTAL TENSION | FINAL SAG | | HORIZONTAL TENSION |
|---|---|---|---|---|---|---|
| F | FT | IN | LB | FT | IN | LB |
| 0.0 | 0 | 4 | 3909.9 | 0 | 4 | 3535.5 |
| 10.0 | 0 | 4 | 3358.0 | 0 | 5 | 2919.9 |
| 30.0 | 0 | 6 | 2403.3 | 0 | 7 | 2018.5 |
| 40.0 | 0 | 7 | 2040.1 | 0 | 8 | 1726.8 |
| 50.0 | 0 | 8 | 1757.5 | 0 | 9 | 1511.6 |
| 60.0 | 0 | 9 | 1542.2 | 0 | 10 | 1350.0 |
| 70.0 | 0 | 10 | 1377.6 | 0 | 11 | 1225.6 |
| 80.0 | 0 | 11 | 1249.6 | 1 | 0 | 1127.3 |
| 90.0 | 1 | 0 | 1147.9 | 1 | 1 | 1047.6 |
| 100.0 | 1 | 1 | 1065.4 | 1 | 2 | 981.6 |
| 110.0 | 1 | 2 | 997.2 | 1 | 3 | 926.1 |
| 120.0 | 1 | 3 | 939.7 | 1 | 4 | 878.6 |
| 130.0 | 1 | 3 | 890.7 | 1 | 4 | 837.4 |
| 167.0 | 1 | 6 | 757.3 | 1 | 7 | 722.7 |
| 176.0 | 1 | 7 | 732.7 | 1 | 8 | 701.1 |
| 212.0 | 1 | 9 | 653.4 | 1 | 10 | 630.3 |

SPAN = 111.0 FT (RULING SPAN = 167.0 FT)

S- 2

| TEMP F | STRINGING SAG FT | STRINGING SAG IN | HORIZONTAL TENSION LB | FINAL SAG FT | FINAL SAG IN | HORIZONTAL TENSION LB |
|---|---|---|---|---|---|---|
| 0.0 | 0 | 4 | 3909.9 | 0 | 5 | 3535.5 |
| 10.0 | 0 | 5 | 3358.0 | 0 | 6 | 2919.9 |
| 30.0 | 0 | 7 | 2403.3 | 0 | 8 | 2018.5 |
| 40.0 | 0 | 8 | 2040.1 | 0 | 10 | 1726.8 |
| 50.0 | 0 | 9 | 1757.5 | 0 | 11 | 1511.6 |
| 60.0 | 0 | 11 | 1542.2 | 1 | 0 | 1350.0 |
| 70.0 | 1 | 0 | 1377.6 | 1 | 2 | 1225.6 |
| 80.0 | 1 | 1 | 1249.6 | 1 | 3 | 1127.3 |
| 90.0 | 1 | 2 | 1147.9 | 1 | 4 | 1047.6 |
| 100.0 | 1 | 4 | 1065.4 | 1 | 5 | 981.6 |
| 110.0 | 1 | 5 | 997.2 | 1 | 6 | 926.1 |
| 120.0 | 1 | 6 | 939.7 | 1 | 7 | 878.6 |
| 130.0 | 1 | 7 | 890.7 | 1 | 8 | 837.4 |
| 167.0 | 1 | 10 | 757.3 | 1 | 11 | 722.7 |
| 176.0 | 1 | 11 | 732.7 | 2 | 0 | 701.1 |
| 212.0 | 2 | 1 | 653.4 | 2 | 2 | 630.3 |

SPAN = 121.0 FT (RULING SPAN = 167.0 FT)

| TEMP F | STRINGING SAG FT | STRINGING SAG IN | HORIZONTAL TENSION LB | FINAL SAG FT | FINAL SAG IN | HORIZONTAL TENSION LB |
|---|---|---|---|---|---|---|
| 0.0 | 0 | 5 | 3909.9 | 0 | 6 | 3535.5 |
| 10.0 | 0 | 6 | 3358.0 | 0 | 7 | 2919.9 |
| 30.0 | 0 | 8 | 2403.3 | 0 | 10 | 2018.5 |
| 40.0 | 0 | 10 | 2040.1 | 0 | 11 | 1726.8 |
| 50.0 | 0 | 11 | 1757.5 | 1 | 1 | 1511.6 |
| 60.0 | 1 | 1 | 1542.2 | 1 | 3 | 1350.0 |
| 70.0 | 1 | 2 | 1377.6 | 1 | 4 | 1225.6 |
| 80.0 | 1 | 4 | 1249.6 | 1 | 5 | 1127.3 |
| 90.0 | 1 | 5 | 1147.9 | 1 | 7 | 1047.6 |
| 100.0 | 1 | 6 | 1065.4 | 1 | 8 | 981.6 |
| 110.0 | 1 | 8 | 997.2 | 1 | 9 | 926.1 |
| 120.0 | 1 | 9 | 939.7 | 1 | 10 | 878.6 |
| 130.0 | 1 | 10 | 890.7 | 1 | 11 | 837.4 |
| 167.0 | 2 | 2 | 757.3 | 2 | 3 | 722.7 |
| 176.0 | 2 | 3 | 732.7 | 2 | 4 | 701.1 |
| 212.0 | 2 | 6 | 653.4 | 2 | 7 | 630.3 |

SPAN = 131.0 FT (RULING SPAN = 167.0 FT)

S- 2

| TEMP F | STRINGING SAG FT | STRINGING SAG IN | HORIZONTAL TENSION LB | FINAL SAG FT | FINAL SAG IN | HORIZONTAL TENSION LB |
|---|---|---|---|---|---|---|
| 0.0 | 0 | 6 | 3909.9 | 0 | 7 | 3535.5 |
| 10.0 | 0 | 7 | 3358.0 | 0 | 8 | 2919.9 |
| 30.0 | 0 | 10 | 2403.3 | 0 | 11 | 2018.5 |
| 40.0 | 0 | 11 | 2040.1 | 1 | 1 | 1726.8 |
| 50.0 | 1 | 1 | 1757.5 | 1 | 3 | 1511.6 |
| 60.0 | 1 | 3 | 1542.2 | 1 | 5 | 1350.0 |
| 70.0 | 1 | 5 | 1377.6 | 1 | 7 | 1225.6 |
| 80.0 | 1 | 6 | 1249.6 | 1 | 8 | 1127.3 |
| 90.0 | 1 | 8 | 1147.9 | 1 | 10 | 1047.6 |
| 100.0 | 1 | 10 | 1065.4 | 1 | 11 | 981.6 |
| 110.0 | 1 | 11 | 997.2 | 2 | 1 | 926.1 |
| 120.0 | 2 | 1 | 939.7 | 2 | 2 | 878.6 |
| 130.0 | 2 | 2 | 890.7 | 2 | 4 | 837.4 |
| 167.0 | 2 | 6 | 757.3 | 2 | 8 | 722.7 |
| 176.0 | 2 | 7 | 732.7 | 2 | 9 | 701.1 |
| 212.0 | 2 | 11 | 653.4 | 3 | 1 | 630.3 |

SPAN = 141.0 FT (RULING SPAN = 167.0 FT)

| TEMP F | STRINGING SAG FT | STRINGING SAG IN | HORIZONTAL TENSION LB | FINAL SAG FT | FINAL SAG IN | HORIZONTAL TENSION LB |
|---|---|---|---|---|---|---|
| 0.0 | 0 | 7 | 3909.9 | 0 | 8 | 3535.5 |
| 10.0 | 0 | 8 | 3358.0 | 0 | 9 | 2919.9 |
| 30.0 | 0 | 11 | 2403.3 | 1 | 1 | 2018.5 |
| 40.0 | 1 | 1 | 2040.1 | 1 | 3 | 1726.8 |
| 50.0 | 1 | 3 | 1757.5 | 1 | 6 | 1511.6 |
| 60.0 | 1 | 5 | 1542.2 | 1 | 8 | 1350.0 |
| 70.0 | 1 | 7 | 1377.6 | 1 | 10 | 1225.6 |
| 80.0 | 1 | 9 | 1249.6 | 2 | 0 | 1127.3 |
| 90.0 | 1 | 11 | 1147.9 | 2 | 2 | 1047.6 |
| 100.0 | 2 | 1 | 1065.4 | 2 | 3 | 981.6 |
| 110.0 | 2 | 3 | 997.2 | 2 | 5 | 926.1 |
| 120.0 | 2 | 4 | 939.7 | 2 | 6 | 878.6 |
| 130.0 | 2 | 6 | 890.7 | 2 | 8 | 837.4 |
| 167.0 | 2 | 11 | 757.3 | 3 | 1 | 722.7 |
| 176.0 | 3 | 0 | 732.7 | 3 | 2 | 701.1 |
| 212.0 | 3 | 5 | 653.4 | 3 | 6 | 630.3 |

SPAN = 151.0 FT (RULING SPAN = 167.0 FT)

S- 2

| TEMP F | STRINGING SAG FT | STRINGING SAG IN | HORIZONTAL TENSION LB | FINAL SAG FT | FINAL SAG IN | HORIZONTAL TENSION LB |
|---|---|---|---|---|---|---|
| 0.0 | 0 | 8 | 3909.9 | 0 | 9 | 3535.5 |
| 10.0 | 0 | 9 | 3358.0 | 0 | 10 | 2919.9 |
| 30.0 | 1 | 1 | 2403.3 | 1 | 3 | 2018.5 |
| 40.0 | 1 | 3 | 2040.1 | 1 | 6 | 1726.8 |
| 50.0 | 1 | 5 | 1757.5 | 1 | 8 | 1511.6 |
| 60.0 | 1 | 8 | 1542.2 | 1 | 11 | 1350.0 |
| 70.0 | 1 | 10 | 1377.6 | 2 | 1 | 1225.6 |
| 80.0 | 2 | 1 | 1249.6 | 2 | 3 | 1127.3 |
| 90.0 | 2 | 3 | 1147.9 | 2 | 5 | 1047.6 |
| 100.0 | 2 | 5 | 1065.4 | 2 | 7 | 981.6 |
| 110.0 | 2 | 7 | 997.2 | 2 | 9 | 926.1 |
| 120.0 | 2 | 9 | 939.7 | 2 | 11 | 878.6 |
| 130.0 | 2 | 10 | 890.7 | 3 | 1 | 837.4 |
| 167.0 | 3 | 4 | 757.3 | 3 | 6 | 722.7 |
| 176.0 | 3 | 6 | 732.7 | 3 | 8 | 701.1 |
| 212.0 | 3 | 11 | 653.4 | 4 | 1 | 630.3 |

SPAN = 161.0 FT (RULING SPAN = 167.0 FT)

| TEMP F | STRINGING SAG FT | STRINGING SAG IN | HORIZONTAL TENSION LB | FINAL SAG FT | FINAL SAG IN | HORIZONTAL TENSION LB |
|---|---|---|---|---|---|---|
| 0.0 | 0 | 9 | 3909.9 | 0 | 10 | 3535.5 |
| 10.0 | 0 | 10 | 3358.0 | 1 | 0 | 2919.9 |
| 30.0 | 1 | 2 | 2403.3 | 1 | 5 | 2018.5 |
| 40.0 | 1 | 5 | 2040.1 | 1 | 8 | 1726.8 |
| 50.0 | 1 | 8 | 1757.5 | 1 | 11 | 1511.6 |
| 60.0 | 1 | 11 | 1542.2 | 2 | 2 | 1350.0 |
| 70.0 | 2 | 1 | 1377.6 | 2 | 4 | 1225.6 |
| 80.0 | 2 | 4 | 1249.6 | 2 | 7 | 1127.3 |
| 90.0 | 2 | 6 | 1147.9 | 2 | 9 | 1047.6 |
| 100.0 | 2 | 9 | 1065.4 | 2 | 11 | 981.6 |
| 110.0 | 2 | 11 | 997.2 | 3 | 2 | 926.1 |
| 120.0 | 3 | 1 | 939.7 | 3 | 4 | 878.6 |
| 130.0 | 3 | 3 | 890.7 | 3 | 6 | 837.4 |
| 167.0 | 3 | 10 | 757.3 | 4 | 0 | 722.7 |
| 176.0 | 4 | 0 | 732.7 | 4 | 2 | 701.1 |
| 212.0 | 4 | 5 | 653.4 | 4 | 7 | 630.3 |

SPAN = 171.0 FT (RULING SPAN = 167.0 FT)

S- 2

| TEMP F | STRINGING SAG FT | STRINGING SAG IN | HORIZONTAL TENSION LB | FINAL SAG FT | FINAL SAG IN | HORIZONTAL TENSION LB |
|---|---|---|---|---|---|---|
| 0.0 | 0 | 10 | 3909.9 | 0 | 11 | 3535.5 |
| 10.0 | 1 | 0 | 3358.0 | 1 | 1 | 2919.9 |
| 30.0 | 1 | 4 | 2403.3 | 1 | 7 | 2018.5 |
| 40.0 | 1 | 7 | 2040.1 | 1 | 11 | 1726.8 |
| 50.0 | 1 | 10 | 1757.5 | 2 | 2 | 1511.6 |
| 60.0 | 2 | 1 | 1542.2 | 2 | 5 | 1350.0 |
| 70.0 | 2 | 5 | 1377.6 | 2 | 8 | 1225.6 |
| 80.0 | 2 | 7 | 1249.6 | 2 | 11 | 1127.3 |
| 90.0 | 2 | 10 | 1147.9 | 3 | 2 | 1047.6 |
| 100.0 | 3 | 1 | 1065.4 | 3 | 4 | 981.6 |
| 110.0 | 3 | 3 | 997.2 | 3 | 6 | 926.1 |
| 120.0 | 3 | 6 | 939.7 | 3 | 9 | 878.6 |
| 130.0 | 3 | 8 | 890.7 | 3 | 11 | 837.4 |
| 167.0 | 4 | 4 | 757.3 | 4 | 6 | 722.7 |
| 176.0 | 4 | 6 | 732.7 | 4 | 8 | 701.1 |
| 212.0 | 5 | 0 | 653.4 | 5 | 2 | 630.3 |

SPAN = 181.0 FT (RULING SPAN = 167.0 FT)

| TEMP F | STRINGING SAG FT | STRINGING SAG IN | HORIZONTAL TENSION LB | FINAL SAG FT | FINAL SAG IN | HORIZONTAL TENSION LB |
|---|---|---|---|---|---|---|
| 0.0 | 0 | 11 | 3909.9 | 1 | 0 | 3535.5 |
| 10.0 | 1 | 1 | 3358.0 | 1 | 3 | 2919.9 |
| 30.0 | 1 | 6 | 2403.3 | 1 | 10 | 2018.5 |
| 40.0 | 1 | 10 | 2040.1 | 2 | 1 | 1726.8 |
| 50.0 | 2 | 1 | 1757.5 | 2 | 5 | 1511.6 |
| 60.0 | 2 | 5 | 1542.2 | 2 | 9 | 1350.0 |
| 70.0 | 2 | 8 | 1377.6 | 3 | 0 | 1225.6 |
| 80.0 | 2 | 11 | 1249.6 | 3 | 3 | 1127.3 |
| 90.0 | 3 | 2 | 1147.9 | 3 | 6 | 1047.6 |
| 100.0 | 3 | 5 | 1065.4 | 3 | 9 | 981.6 |
| 110.0 | 3 | 8 | 997.2 | 4 | 0 | 926.1 |
| 120.0 | 3 | 11 | 939.7 | 4 | 2 | 878.6 |
| 130.0 | 4 | 1 | 890.7 | 4 | 5 | 837.4 |
| 167.0 | 4 | 10 | 757.3 | 5 | 1 | 722.7 |
| 176.0 | 5 | 0 | 732.7 | 5 | 3 | 701.1 |
| 212.0 | 5 | 7 | 653.4 | 5 | 10 | 630.3 |

SPAN = 191.0 FT (RULING SPAN = 167.0 FT)

S- 2

| TEMP F | STRINGING SAG FT | STRINGING SAG IN | HORIZONTAL TENSION LB | FINAL SAG FT | FINAL SAG IN | HORIZONTAL TENSION LB |
|---|---|---|---|---|---|---|
| 0.0 | 1 | 1 | 3909.9 | 1 | 2 | 3535.5 |
| 10.0 | 1 | 3 | 3358.0 | 1 | 5 | 2919.9 |
| 30.0 | 1 | 8 | 2403.3 | 2 | 0 | 2018.5 |
| 40.0 | 2 | 0 | 2040.1 | 2 | 4 | 1726.8 |
| 50.0 | 2 | 4 | 1757.5 | 2 | 8 | 1511.6 |
| 60.0 | 2 | 8 | 1542.2 | 3 | 0 | 1350.0 |
| 70.0 | 3 | 0 | 1377.6 | 3 | 4 | 1225.6 |
| 80.0 | 3 | 3 | 1249.6 | 3 | 8 | 1127.3 |
| 90.0 | 3 | 7 | 1147.9 | 3 | 11 | 1047.6 |
| 100.0 | 3 | 10 | 1065.4 | 4 | 2 | 981.6 |
| 110.0 | 4 | 1 | 997.2 | 4 | 5 | 926.1 |
| 120.0 | 4 | 4 | 939.7 | 4 | 8 | 878.6 |
| 130.0 | 4 | 7 | 890.7 | 4 | 11 | 837.4 |
| 167.0 | 5 | 5 | 757.3 | 5 | 8 | 722.7 |
| 176.0 | 5 | 7 | 732.7 | 5 | 10 | 701.1 |
| 212.0 | 6 | 3 | 653.4 | 6 | 6 | 630.3 |

SPAN = 201.0 FT (RULING SPAN = 167.0 FT)

| TEMP F | STRINGING SAG FT | STRINGING SAG IN | HORIZONTAL TENSION LB | FINAL SAG FT | FINAL SAG IN | HORIZONTAL TENSION LB |
|---|---|---|---|---|---|---|
| 0.0 | 1 | 2 | 3909.9 | 1 | 3 | 3535.5 |
| 10.0 | 1 | 4 | 3358.0 | 1 | 7 | 2919.9 |
| 30.0 | 1 | 11 | 2403.3 | 2 | 3 | 2018.5 |
| 40.0 | 2 | 3 | 2040.1 | 2 | 7 | 1726.8 |
| 50.0 | 2 | 7 | 1757.5 | 3 | 0 | 1511.6 |
| 60.0 | 2 | 11 | 1542.2 | 3 | 4 | 1350.0 |
| 70.0 | 3 | 3 | 1377.6 | 3 | 8 | 1225.6 |
| 80.0 | 3 | 7 | 1249.6 | 4 | 0 | 1127.3 |
| 90.0 | 3 | 11 | 1147.9 | 4 | 4 | 1047.6 |
| 100.0 | 4 | 3 | 1065.4 | 4 | 7 | 981.6 |
| 110.0 | 4 | 6 | 997.2 | 4 | 11 | 926.1 |
| 120.0 | 4 | 10 | 939.7 | 5 | 2 | 878.6 |
| 130.0 | 5 | 1 | 890.7 | 5 | 5 | 837.4 |
| 167.0 | 6 | 0 | 757.3 | 6 | 3 | 722.7 |
| 176.0 | 6 | 2 | 732.7 | 6 | 6 | 701.1 |
| 212.0 | 6 | 11 | 653.4 | 7 | 2 | 630.3 |

SPAN = 211.0 FT (RULING SPAN = 167.0 FT)

S- 2

| TEMP F | STRINGING SAG FT | STRINGING SAG IN | HORIZONTAL TENSION LB | FINAL SAG FT | FINAL SAG IN | HORIZONTAL TENSION LB |
|---|---|---|---|---|---|---|
| 0.0 | 1 | 3 | 3909.9 | 1 | 5 | 3535.5 |
| 10.0 | 1 | 6 | 3358.0 | 1 | 8 | 2919.9 |
| 30.0 | 2 | 1 | 2403.3 | 2 | 6 | 2018.5 |
| 40.0 | 2 | 5 | 2040.1 | 2 | 11 | 1726.8 |
| 50.0 | 2 | 10 | 1757.5 | 3 | 4 | 1511.6 |
| 60.0 | 3 | 3 | 1542.2 | 3 | 8 | 1350.0 |
| 70.0 | 3 | 7 | 1377.6 | 4 | 1 | 1225.6 |
| 80.0 | 4 | 0 | 1249.6 | 4 | 5 | 1127.3 |
| 90.0 | 4 | 4 | 1147.9 | 4 | 9 | 1047.6 |
| 100.0 | 4 | 8 | 1065.4 | 5 | 1 | 981.6 |
| 110.0 | 5 | 0 | 997.2 | 5 | 5 | 926.1 |
| 120.0 | 5 | 4 | 939.7 | 5 | 8 | 878.6 |
| 130.0 | 5 | 7 | 890.7 | 6 | 0 | 837.4 |
| 167.0 | 6 | 7 | 757.3 | 6 | 11 | 722.7 |
| 176.0 | 6 | 10 | 732.7 | 7 | 1 | 701.1 |
| 212.0 | 7 | 8 | 653.4 | 7 | 11 | 630.3 |

SPAN = 221.0 FT (RULING SPAN = 167.0 FT)

| TEMP F | STRINGING SAG FT | STRINGING SAG IN | HORIZONTAL TENSION LB | FINAL SAG FT | FINAL SAG IN | HORIZONTAL TENSION LB |
|---|---|---|---|---|---|---|
| 0.0 | 1 | 5 | 3909.9 | 1 | 7 | 3535.5 |
| 10.0 | 1 | 8 | 3358.0 | 1 | 10 | 2919.9 |
| 30.0 | 2 | 3 | 2403.3 | 2 | 9 | 2018.5 |
| 40.0 | 2 | 8 | 2040.1 | 3 | 2 | 1726.8 |
| 50.0 | 3 | 1 | 1757.5 | 3 | 7 | 1511.6 |
| 60.0 | 3 | 7 | 1542.2 | 4 | 1 | 1350.0 |
| 70.0 | 4 | 0 | 1377.6 | 4 | 6 | 1225.6 |
| 80.0 | 4 | 5 | 1249.6 | 4 | 10 | 1127.3 |
| 90.0 | 4 | 9 | 1147.9 | 5 | 3 | 1047.6 |
| 100.0 | 5 | 2 | 1065.4 | 5 | 7 | 981.6 |
| 110.0 | 5 | 6 | 997.2 | 5 | 11 | 926.1 |
| 120.0 | 5 | 10 | 939.7 | 6 | 3 | 878.6 |
| 130.0 | 6 | 2 | 890.7 | 6 | 6 | 837.4 |
| 167.0 | 7 | 3 | 757.3 | 7 | 7 | 722.7 |
| 176.0 | 7 | 6 | 732.7 | 7 | 10 | 701.1 |
| 212.0 | 8 | 5 | 653.4 | 8 | 8 | 630.3 |

SPAN = 231.0 FT (RULING SPAN = 167.0 FT)

S- 2

| TEMP F | STRINGING SAG FT | STRINGING SAG IN | HORIZONTAL TENSION LB | FINAL SAG FT | FINAL SAG IN | HORIZONTAL TENSION LB |
|---|---|---|---|---|---|---|
| 0.0 | 1 | 6 | 3909.9 | 1 | 8 | 3535.5 |
| 10.0 | 1 | 9 | 3358.0 | 2 | 1 | 2919.9 |
| 30.0 | 2 | 6 | 2403.3 | 3 | 0 | 2018.5 |
| 40.0 | 2 | 11 | 2040.1 | 3 | 6 | 1726.8 |
| 50.0 | 3 | 5 | 1757.5 | 3 | 11 | 1511.6 |
| 60.0 | 3 | 11 | 1542.2 | 4 | 5 | 1350.0 |
| 70.0 | 4 | 4 | 1377.6 | 4 | 11 | 1225.6 |
| 80.0 | 4 | 9 | 1249.6 | 5 | 4 | 1127.3 |
| 90.0 | 5 | 3 | 1147.9 | 5 | 9 | 1047.6 |
| 100.0 | 5 | 7 | 1065.4 | 6 | 1 | 981.6 |
| 110.0 | 6 | 0 | 997.2 | 6 | 6 | 926.1 |
| 120.0 | 6 | 4 | 939.7 | 6 | 10 | 878.6 |
| 130.0 | 6 | 9 | 890.7 | 7 | 2 | 837.4 |
| 167.0 | 7 | 11 | 757.3 | 8 | 3 | 722.7 |
| 176.0 | 8 | 2 | 732.7 | 8 | 6 | 701.1 |
| 212.0 | 9 | 2 | 653.4 | 9 | 6 | 630.3 |

SOUTHWIRE COMPANY
CARROLLTON, GEORGIA

STRINGING TABLE
(CATENARY METHOD)

CHART NO: S- 3
FILE NO: 40058
DATE: 08/21/06

RULING SPAN = 184.0 FT

LOADING DISTRICT: LIGHT

CONDUCTOR: 954 KCM - 37 STR. AAC "MAGNOLIA"

NOTE: FOR STRINGING CALCULATIONS, THE HORIZONTAL TENSION OF THE RULING SPAN IS HELD CONSTANT (FOR EACH PARTICULAR TEMPERATURE) IN ORDER TO CALCULATE STRINGING SAGS FOR THE OTHER SPANS. THE FINAL DATA IS TO BE USED FOR PRE-STRESSED CABLE ONLY.

SPAN = 80.0 FT

(RULING SPAN = 184.0 FT)

| TEMP | STRINGING SAG | | HORIZONTAL TENSION | FINAL SAG | | HORIZONTAL TENSION |
|---|---|---|---|---|---|---|
| F | FT | IN | LB | FT | IN | LB |
| 0.0 | 0 | 2 | 3793.4 | 0 | 3 | 3370.2 |
| 10.0 | 0 | 3 | 3267.8 | 0 | 3 | 2812.1 |
| 30.0 | 0 | 4 | 2386.4 | 0 | 4 | 2015.8 |
| 40.0 | 0 | 4 | 2057.2 | 0 | 5 | 1755.8 |
| 50.0 | 0 | 5 | 1799.3 | 0 | 6 | 1559.5 |
| 60.0 | 0 | 5 | 1599.5 | 0 | 6 | 1408.5 |
| 70.0 | 0 | 6 | 1443.6 | 0 | 7 | 1289.7 |
| 80.0 | 0 | 7 | 1319.9 | 0 | 7 | 1194.0 |
| 90.0 | 0 | 7 | 1220.1 | 0 | 8 | 1115.3 |
| 100.0 | 0 | 8 | 1137.9 | 0 | 8 | 1049.3 |
| 110.0 | 0 | 8 | 1069.1 | 0 | 9 | 993.2 |
| 120.0 | 0 | 9 | 1010.6 | 0 | 9 | 944.8 |
| 130.0 | 0 | 9 | 960.2 | 0 | 10 | 902.6 |
| 167.0 | 0 | 10 | 821.5 | 0 | 11 | 783.3 |
| 176.0 | 0 | 11 | 795.7 | 0 | 11 | 760.7 |
| 212.0 | 1 | 0 | 711.8 | 1 | 1 | 686.0 |

SPAN = 90.0 FT (RULING SPAN = 184.0 FT)

S- 3

| TEMP F | STRINGING SAG FT | STRINGING SAG IN | HORIZONTAL TENSION LB | FINAL SAG FT | FINAL SAG IN | HORIZONTAL TENSION LB |
|---|---|---|---|---|---|---|
| 0.0 | 0 | 3 | 3793.4 | 0 | 3 | 3370.2 |
| 10.0 | 0 | 3 | 3267.8 | 0 | 4 | 2812.1 |
| 30.0 | 0 | 5 | 2386.4 | 0 | 5 | 2015.8 |
| 40.0 | 0 | 5 | 2057.2 | 0 | 6 | 1755.8 |
| 50.0 | 0 | 6 | 1799.3 | 0 | 7 | 1559.5 |
| 60.0 | 0 | 7 | 1599.5 | 0 | 8 | 1408.5 |
| 70.0 | 0 | 8 | 1443.6 | 0 | 8 | 1289.7 |
| 80.0 | 0 | 8 | 1319.9 | 0 | 9 | 1194.0 |
| 90.0 | 0 | 9 | 1220.1 | 0 | 10 | 1115.3 |
| 100.0 | 0 | 10 | 1137.9 | 0 | 10 | 1049.3 |
| 110.0 | 0 | 10 | 1069.1 | 0 | 11 | 993.2 |
| 120.0 | 0 | 11 | 1010.6 | 1 | 0 | 944.8 |
| 130.0 | 0 | 11 | 960.2 | 1 | 0 | 902.6 |
| 167.0 | 1 | 1 | 821.5 | 1 | 2 | 783.3 |
| 176.0 | 1 | 2 | 795.7 | 1 | 2 | 760.7 |
| 212.0 | 1 | 3 | 711.8 | 1 | 4 | 686.0 |

SPAN = 100.0 FT (RULING SPAN = 184.0 FT)

| TEMP F | STRINGING SAG FT | STRINGING SAG IN | HORIZONTAL TENSION LB | FINAL SAG FT | FINAL SAG IN | HORIZONTAL TENSION LB |
|---|---|---|---|---|---|---|
| 0.0 | 0 | 4 | 3793.4 | 0 | 4 | 3370.2 |
| 10.0 | 0 | 4 | 3267.8 | 0 | 5 | 2812.1 |
| 30.0 | 0 | 6 | 2386.4 | 0 | 7 | 2015.8 |
| 40.0 | 0 | 7 | 2057.2 | 0 | 8 | 1755.8 |
| 50.0 | 0 | 7 | 1799.3 | 0 | 9 | 1559.5 |
| 60.0 | 0 | 8 | 1599.5 | 0 | 10 | 1408.5 |
| 70.0 | 0 | 9 | 1443.6 | 0 | 10 | 1289.7 |
| 80.0 | 0 | 10 | 1319.9 | 0 | 11 | 1194.0 |
| 90.0 | 0 | 11 | 1220.1 | 1 | 0 | 1115.3 |
| 100.0 | 1 | 0 | 1137.9 | 1 | 1 | 1049.3 |
| 110.0 | 1 | 1 | 1069.1 | 1 | 2 | 993.2 |
| 120.0 | 1 | 1 | 1010.6 | 1 | 2 | 944.8 |
| 130.0 | 1 | 2 | 960.2 | 1 | 3 | 902.6 |
| 167.0 | 1 | 4 | 821.5 | 1 | 5 | 783.3 |
| 176.0 | 1 | 5 | 795.7 | 1 | 6 | 760.7 |
| 212.0 | 1 | 7 | 711.8 | 1 | 8 | 686.0 |

SPAN = 110.0 FT (RULING SPAN = 184.0 FT)

S- 3

| TEMP F | STRINGING SAG FT | STRINGING SAG IN | HORIZONTAL TENSION LB | FINAL SAG FT | FINAL SAG IN | HORIZONTAL TENSION LB |
|---|---|---|---|---|---|---|
| 0.0 | 0 | 4 | 3793.4 | 0 | 5 | 3370.2 |
| 10.0 | 0 | 5 | 3267.8 | 0 | 6 | 2812.1 |
| 30.0 | 0 | 7 | 2386.4 | 0 | 8 | 2015.8 |
| 40.0 | 0 | 8 | 2057.2 | 0 | 9 | 1755.8 |
| 50.0 | 0 | 9 | 1799.3 | 0 | 10 | 1559.5 |
| 60.0 | 0 | 10 | 1599.5 | 1 | 0 | 1408.5 |
| 70.0 | 0 | 11 | 1443.6 | 1 | 1 | 1289.7 |
| 80.0 | 1 | 0 | 1319.9 | 1 | 2 | 1194.0 |
| 90.0 | 1 | 1 | 1220.1 | 1 | 3 | 1115.3 |
| 100.0 | 1 | 2 | 1137.9 | 1 | 3 | 1049.3 |
| 110.0 | 1 | 3 | 1069.1 | 1 | 4 | 993.2 |
| 120.0 | 1 | 4 | 1010.6 | 1 | 5 | 944.8 |
| 130.0 | 1 | 5 | 960.2 | 1 | 6 | 902.6 |
| 167.0 | 1 | 8 | 821.5 | 1 | 9 | 783.3 |
| 176.0 | 1 | 8 | 795.7 | 1 | 9 | 760.7 |
| 212.0 | 1 | 11 | 711.8 | 2 | 0 | 686.0 |

SPAN = 120.0 FT (RULING SPAN = 184.0 FT)

| TEMP F | STRINGING SAG FT | STRINGING SAG IN | HORIZONTAL TENSION LB | FINAL SAG FT | FINAL SAG IN | HORIZONTAL TENSION LB |
|---|---|---|---|---|---|---|
| 0.0 | 0 | 5 | 3793.4 | 0 | 6 | 3370.2 |
| 10.0 | 0 | 6 | 3267.8 | 0 | 7 | 2812.1 |
| 30.0 | 0 | 8 | 2386.4 | 0 | 10 | 2015.8 |
| 40.0 | 0 | 9 | 2057.2 | 0 | 11 | 1755.8 |
| 50.0 | 0 | 11 | 1799.3 | 1 | 0 | 1559.5 |
| 60.0 | 1 | 0 | 1599.5 | 1 | 2 | 1408.5 |
| 70.0 | 1 | 1 | 1443.6 | 1 | 3 | 1289.7 |
| 80.0 | 1 | 3 | 1319.9 | 1 | 4 | 1194.0 |
| 90.0 | 1 | 4 | 1220.1 | 1 | 5 | 1115.3 |
| 100.0 | 1 | 5 | 1137.9 | 1 | 6 | 1049.3 |
| 110.0 | 1 | 6 | 1069.1 | 1 | 7 | 993.2 |
| 120.0 | 1 | 7 | 1010.6 | 1 | 8 | 944.8 |
| 130.0 | 1 | 8 | 960.2 | 1 | 9 | 902.6 |
| 167.0 | 2 | 0 | 821.5 | 2 | 1 | 783.3 |
| 176.0 | 2 | 0 | 795.7 | 2 | 1 | 760.7 |
| 212.0 | 2 | 3 | 711.8 | 2 | 4 | 686.0 |

SPAN = 130.0 FT (RULING SPAN = 184.0 FT)

S- 3

| TEMP F | STRINGING SAG FT | STRINGING SAG IN | HORIZONTAL TENSION LB | FINAL SAG FT | FINAL SAG IN | HORIZONTAL TENSION LB |
|---|---|---|---|---|---|---|
| 0.0 | 0 | 6 | 3793.4 | 0 | 7 | 3370.2 |
| 10.0 | 0 | 7 | 3267.8 | 0 | 8 | 2812.1 |
| 30.0 | 0 | 10 | 2386.4 | 0 | 11 | 2015.8 |
| 40.0 | 0 | 11 | 2057.2 | 1 | 1 | 1755.8 |
| 50.0 | 1 | 1 | 1799.3 | 1 | 3 | 1559.5 |
| 60.0 | 1 | 2 | 1599.5 | 1 | 4 | 1408.5 |
| 70.0 | 1 | 4 | 1443.6 | 1 | 6 | 1289.7 |
| 80.0 | 1 | 5 | 1319.9 | 1 | 7 | 1194.0 |
| 90.0 | 1 | 7 | 1220.1 | 1 | 8 | 1115.3 |
| 100.0 | 1 | 8 | 1137.9 | 1 | 10 | 1049.3 |
| 110.0 | 1 | 9 | 1069.1 | 1 | 11 | 993.2 |
| 120.0 | 1 | 10 | 1010.6 | 2 | 0 | 944.8 |
| 130.0 | 2 | 0 | 960.2 | 2 | 1 | 902.6 |
| 167.0 | 2 | 4 | 821.5 | 2 | 5 | 783.3 |
| 176.0 | 2 | 5 | 795.7 | 2 | 6 | 760.7 |
| 212.0 | 2 | 8 | 711.8 | 2 | 9 | 686.0 |

SPAN = 140.0 FT (RULING SPAN = 184.0 FT)

| TEMP F | STRINGING SAG FT | STRINGING SAG IN | HORIZONTAL TENSION LB | FINAL SAG FT | FINAL SAG IN | HORIZONTAL TENSION LB |
|---|---|---|---|---|---|---|
| 0.0 | 0 | 7 | 3793.4 | 0 | 8 | 3370.2 |
| 10.0 | 0 | 8 | 3267.8 | 0 | 9 | 2812.1 |
| 30.0 | 0 | 11 | 2386.4 | 1 | 1 | 2015.8 |
| 40.0 | 1 | 1 | 2057.2 | 1 | 3 | 1755.8 |
| 50.0 | 1 | 3 | 1799.3 | 1 | 5 | 1559.5 |
| 60.0 | 1 | 4 | 1599.5 | 1 | 7 | 1408.5 |
| 70.0 | 1 | 6 | 1443.6 | 1 | 8 | 1289.7 |
| 80.0 | 1 | 8 | 1319.9 | 1 | 10 | 1194.0 |
| 90.0 | 1 | 10 | 1220.1 | 2 | 0 | 1115.3 |
| 100.0 | 1 | 11 | 1137.9 | 2 | 1 | 1049.3 |
| 110.0 | 2 | 1 | 1069.1 | 2 | 3 | 993.2 |
| 120.0 | 2 | 2 | 1010.6 | 2 | 4 | 944.8 |
| 130.0 | 2 | 3 | 960.2 | 2 | 5 | 902.6 |
| 167.0 | 2 | 8 | 821.5 | 2 | 10 | 783.3 |
| 176.0 | 2 | 9 | 795.7 | 2 | 11 | 760.7 |
| 212.0 | 3 | 1 | 711.8 | 3 | 2 | 686.0 |

SPAN = 150.0 FT (RULING SPAN = 184.0 FT)

S- 3

| TEMP F | STRINGING SAG FT | STRINGING SAG IN | HORIZONTAL TENSION LB | FINAL SAG FT | FINAL SAG IN | HORIZONTAL TENSION LB |
|---|---|---|---|---|---|---|
| 0.0 | 0 | 8 | 3793.4 | 0 | 9 | 3370.2 |
| 10.0 | 0 | 9 | 3267.8 | 0 | 11 | 2812.1 |
| 30.0 | 1 | 1 | 2386.4 | 1 | 3 | 2015.8 |
| 40.0 | 1 | 3 | 2057.2 | 1 | 5 | 1755.8 |
| 50.0 | 1 | 5 | 1799.3 | 1 | 7 | 1559.5 |
| 60.0 | 1 | 7 | 1599.5 | 1 | 9 | 1408.5 |
| 70.0 | 1 | 9 | 1443.6 | 1 | 11 | 1289.7 |
| 80.0 | 1 | 11 | 1319.9 | 2 | 1 | 1194.0 |
| 90.0 | 2 | 1 | 1220.1 | 2 | 3 | 1115.3 |
| 100.0 | 2 | 3 | 1137.9 | 2 | 5 | 1049.3 |
| 110.0 | 2 | 4 | 1069.1 | 2 | 6 | 993.2 |
| 120.0 | 2 | 6 | 1010.6 | 2 | 8 | 944.8 |
| 130.0 | 2 | 7 | 960.2 | 2 | 10 | 902.6 |
| 167.0 | 3 | 1 | 821.5 | 3 | 3 | 783.3 |
| 176.0 | 3 | 2 | 795.7 | 3 | 4 | 760.7 |
| 212.0 | 3 | 7 | 711.8 | 3 | 8 | 686.0 |

SPAN = 160.0 FT (RULING SPAN = 184.0 FT)

| TEMP F | STRINGING SAG FT | STRINGING SAG IN | HORIZONTAL TENSION LB | FINAL SAG FT | FINAL SAG IN | HORIZONTAL TENSION LB |
|---|---|---|---|---|---|---|
| 0.0 | 0 | 9 | 3793.4 | 0 | 10 | 3370.2 |
| 10.0 | 0 | 11 | 3267.8 | 1 | 0 | 2812.1 |
| 30.0 | 1 | 2 | 2386.4 | 1 | 5 | 2015.8 |
| 40.0 | 1 | 5 | 2057.2 | 1 | 8 | 1755.8 |
| 50.0 | 1 | 7 | 1799.3 | 1 | 10 | 1559.5 |
| 60.0 | 1 | 10 | 1599.5 | 2 | 0 | 1408.5 |
| 70.0 | 2 | 0 | 1443.6 | 2 | 3 | 1289.7 |
| 80.0 | 2 | 2 | 1319.9 | 2 | 5 | 1194.0 |
| 90.0 | 2 | 4 | 1220.1 | 2 | 7 | 1115.3 |
| 100.0 | 2 | 6 | 1137.9 | 2 | 9 | 1049.3 |
| 110.0 | 2 | 8 | 1069.1 | 2 | 11 | 993.2 |
| 120.0 | 2 | 10 | 1010.6 | 3 | 0 | 944.8 |
| 130.0 | 3 | 0 | 960.2 | 3 | 2 | 902.6 |
| 167.0 | 3 | 6 | 821.5 | 3 | 8 | 783.3 |
| 176.0 | 3 | 7 | 795.7 | 3 | 9 | 760.7 |
| 212.0 | 4 | 0 | 711.8 | 4 | 2 | 686.0 |

SPAN = 170.0 FT (RULING SPAN = 184.0 FT)

S- 3

| TEMP F | STRINGING SAG FT | STRINGING SAG IN | HORIZONTAL TENSION LB | FINAL SAG FT | FINAL SAG IN | HORIZONTAL TENSION LB |
|---|---|---|---|---|---|---|
| 0.0 | 0 | 10 | 3793.4 | 1 | 0 | 3370.2 |
| 10.0 | 1 | 0 | 3267.8 | 1 | 2 | 2812.1 |
| 30.0 | 1 | 4 | 2386.4 | 1 | 7 | 2015.8 |
| 40.0 | 1 | 7 | 2057.2 | 1 | 10 | 1755.8 |
| 50.0 | 1 | 10 | 1799.3 | 2 | 1 | 1559.5 |
| 60.0 | 2 | 0 | 1599.5 | 2 | 4 | 1408.5 |
| 70.0 | 2 | 3 | 1443.6 | 2 | 6 | 1289.7 |
| 80.0 | 2 | 5 | 1319.9 | 2 | 9 | 1194.0 |
| 90.0 | 2 | 8 | 1220.1 | 2 | 11 | 1115.3 |
| 100.0 | 2 | 10 | 1137.9 | 3 | 1 | 1049.3 |
| 110.0 | 3 | 0 | 1069.1 | 3 | 3 | 993.2 |
| 120.0 | 3 | 2 | 1010.6 | 3 | 5 | 944.8 |
| 130.0 | 3 | 4 | 960.2 | 3 | 7 | 902.6 |
| 167.0 | 3 | 11 | 821.5 | 4 | 2 | 783.3 |
| 176.0 | 4 | 1 | 795.7 | 4 | 3 | 760.7 |
| 212.0 | 4 | 7 | 711.8 | 4 | 9 | 686.0 |

SPAN = 180.0 FT (RULING SPAN = 184.0 FT)

| TEMP F | STRINGING SAG FT | STRINGING SAG IN | HORIZONTAL TENSION LB | FINAL SAG FT | FINAL SAG IN | HORIZONTAL TENSION LB |
|---|---|---|---|---|---|---|
| 0.0 | 0 | 11 | 3793.4 | 1 | 1 | 3370.2 |
| 10.0 | 1 | 1 | 3267.8 | 1 | 3 | 2812.1 |
| 30.0 | 1 | 6 | 2386.4 | 1 | 10 | 2015.8 |
| 40.0 | 1 | 9 | 2057.2 | 2 | 1 | 1755.8 |
| 50.0 | 2 | 0 | 1799.3 | 2 | 4 | 1559.5 |
| 60.0 | 2 | 3 | 1599.5 | 2 | 7 | 1408.5 |
| 70.0 | 2 | 6 | 1443.6 | 2 | 10 | 1289.7 |
| 80.0 | 2 | 9 | 1319.9 | 3 | 0 | 1194.0 |
| 90.0 | 3 | 0 | 1220.1 | 3 | 3 | 1115.3 |
| 100.0 | 3 | 2 | 1137.9 | 3 | 6 | 1049.3 |
| 110.0 | 3 | 5 | 1069.1 | 3 | 8 | 993.2 |
| 120.0 | 3 | 7 | 1010.6 | 3 | 10 | 944.8 |
| 130.0 | 3 | 9 | 960.2 | 4 | 0 | 902.6 |
| 167.0 | 4 | 5 | 821.5 | 4 | 8 | 783.3 |
| 176.0 | 4 | 7 | 795.7 | 4 | 9 | 760.7 |
| 212.0 | 5 | 1 | 711.8 | 5 | 4 | 686.0 |

SPAN = 190.0 FT (RULING SPAN = 184.0 FT)

S- 3

| TEMP F | STRINGING SAG FT | STRINGING SAG IN | HORIZONTAL TENSION LB | FINAL SAG FT | FINAL SAG IN | HORIZONTAL TENSION LB |
|---|---|---|---|---|---|---|
| 0.0 | 1 | 1 | 3793.4 | 1 | 2 | 3370.2 |
| 10.0 | 1 | 3 | 3267.8 | 1 | 5 | 2812.1 |
| 30.0 | 1 | 8 | 2386.4 | 2 | 0 | 2015.8 |
| 40.0 | 2 | 0 | 2057.2 | 2 | 4 | 1755.8 |
| 50.0 | 2 | 3 | 1799.3 | 2 | 7 | 1559.5 |
| 60.0 | 2 | 6 | 1599.5 | 2 | 10 | 1408.5 |
| 70.0 | 2 | 10 | 1443.6 | 3 | 2 | 1289.7 |
| 80.0 | 3 | 1 | 1319.9 | 3 | 5 | 1194.0 |
| 90.0 | 3 | 4 | 1220.1 | 3 | 8 | 1115.3 |
| 100.0 | 3 | 7 | 1137.9 | 3 | 10 | 1049.3 |
| 110.0 | 3 | 9 | 1069.1 | 4 | 1 | 993.2 |
| 120.0 | 4 | 0 | 1010.6 | 4 | 3 | 944.8 |
| 130.0 | 4 | 3 | 960.2 | 4 | 6 | 902.6 |
| 167.0 | 4 | 11 | 821.5 | 5 | 2 | 783.3 |
| 176.0 | 5 | 1 | 795.7 | 5 | 4 | 760.7 |
| 212.0 | 5 | 8 | 711.8 | 5 | 11 | 686.0 |

SPAN = 200.0 FT (RULING SPAN = 184.0 FT)

| TEMP F | STRINGING SAG FT | STRINGING SAG IN | HORIZONTAL TENSION LB | FINAL SAG FT | FINAL SAG IN | HORIZONTAL TENSION LB |
|---|---|---|---|---|---|---|
| 0.0 | 1 | 2 | 3793.4 | 1 | 4 | 3370.2 |
| 10.0 | 1 | 4 | 3267.8 | 1 | 7 | 2812.1 |
| 30.0 | 1 | 11 | 2386.4 | 2 | 3 | 2015.8 |
| 40.0 | 2 | 2 | 2057.2 | 2 | 7 | 1755.8 |
| 50.0 | 2 | 6 | 1799.3 | 2 | 10 | 1559.5 |
| 60.0 | 2 | 10 | 1599.5 | 3 | 2 | 1408.5 |
| 70.0 | 3 | 1 | 1443.6 | 3 | 6 | 1289.7 |
| 80.0 | 3 | 5 | 1319.9 | 3 | 9 | 1194.0 |
| 90.0 | 3 | 8 | 1220.1 | 4 | 0 | 1115.3 |
| 100.0 | 3 | 11 | 1137.9 | 4 | 3 | 1049.3 |
| 110.0 | 4 | 2 | 1069.1 | 4 | 6 | 993.2 |
| 120.0 | 4 | 5 | 1010.6 | 4 | 9 | 944.8 |
| 130.0 | 4 | 8 | 960.2 | 5 | 0 | 902.6 |
| 167.0 | 5 | 5 | 821.5 | 5 | 9 | 783.3 |
| 176.0 | 5 | 8 | 795.7 | 5 | 11 | 760.7 |
| 212.0 | 6 | 4 | 711.8 | 6 | 6 | 686.0 |

SPAN = 210.0 FT (RULING SPAN = 184.0 FT)

S- 3

| TEMP | STRINGING SAG | | HORIZONTAL TENSION | FINAL SAG | | HORIZONTAL TENSION |
|---|---|---|---|---|---|---|
| F | FT | IN | LB | FT | IN | LB |
| 0.0 | 1 | 4 | 3793.4 | 1 | 6 | 3370.2 |
| 10.0 | 1 | 6 | 3267.8 | 1 | 9 | 2812.1 |
| 30.0 | 2 | 1 | 2386.4 | 2 | 5 | 2015.8 |
| 40.0 | 2 | 5 | 2057.2 | 2 | 10 | 1755.8 |
| 50.0 | 2 | 9 | 1799.3 | 3 | 2 | 1559.5 |
| 60.0 | 3 | 1 | 1599.5 | 3 | 6 | 1408.5 |
| 70.0 | 3 | 5 | 1443.6 | 3 | 10 | 1289.7 |
| 80.0 | 3 | 9 | 1319.9 | 4 | 2 | 1194.0 |
| 90.0 | 4 | 1 | 1220.1 | 4 | 5 | 1115.3 |
| 100.0 | 4 | 4 | 1137.9 | 4 | 9 | 1049.3 |
| 110.0 | 4 | 7 | 1069.1 | 5 | 0 | 993.2 |
| 120.0 | 4 | 11 | 1010.6 | 5 | 3 | 944.8 |
| 130.0 | 5 | 2 | 960.2 | 5 | 6 | 902.6 |
| 167.0 | 6 | 0 | 821.5 | 6 | 4 | 783.3 |
| 176.0 | 6 | 3 | 795.7 | 6 | 6 | 760.7 |
| 212.0 | 6 | 11 | 711.8 | 7 | 3 | 686.0 |

SOUTHWIRE COMPANY
CARROLLTON, GEORGIA

STRINGING TABLE
(CATENARY METHOD)

CHART NO: S- 4
FILE NO: 40058
DATE: 08/21/06

RULING SPAN = 190.0 FT

LOADING DISTRICT: LIGHT

CONDUCTOR: 954 KCM - 37 STR. AAC "MAGNOLIA"

NOTE: FOR STRINGING CALCULATIONS, THE HORIZONTAL TENSION OF THE RULING SPAN IS HELD CONSTANT (FOR EACH PARTICULAR TEMPERATURE) IN ORDER TO CALCULATE STRINGING SAGS FOR THE OTHER SPANS. THE FINAL DATA IS TO BE USED FOR PRE-STRESSED CABLE ONLY.

SPAN = 77.0 FT

(RULING SPAN = 190.0 FT)

| TEMP | STRINGING SAG | | HORIZONTAL TENSION | FINAL SAG | | HORIZONTAL TENSION |
|---|---|---|---|---|---|---|
| F | FT | IN | LB | FT | IN | LB |
| 0.0 | 0 | 2 | 3751.4 | 0 | 2 | 3315.5 |
| 10.0 | 0 | 2 | 3236.3 | 0 | 3 | 2778.0 |
| 30.0 | 0 | 3 | 2380.8 | 0 | 4 | 2015.9 |
| 40.0 | 0 | 4 | 2062.8 | 0 | 5 | 1765.8 |
| 50.0 | 0 | 4 | 1812.9 | 0 | 5 | 1575.4 |
| 60.0 | 0 | 5 | 1618.2 | 0 | 6 | 1428.0 |
| 70.0 | 0 | 5 | 1465.3 | 0 | 6 | 1311.1 |
| 80.0 | 0 | 6 | 1343.2 | 0 | 7 | 1216.3 |
| 90.0 | 0 | 6 | 1244.1 | 0 | 7 | 1138.1 |
| 100.0 | 0 | 7 | 1162.2 | 0 | 7 | 1072.2 |
| 110.0 | 0 | 7 | 1093.3 | 0 | 8 | 1016.0 |
| 120.0 | 0 | 8 | 1034.6 | 0 | 8 | 967.4 |
| 130.0 | 0 | 8 | 983.9 | 0 | 9 | 924.8 |
| 167.0 | 0 | 9 | 843.6 | 0 | 10 | 804.2 |
| 176.0 | 0 | 10 | 817.3 | 0 | 10 | 781.2 |
| 212.0 | 0 | 11 | 732.0 | 0 | 11 | 705.3 |

SPAN = 87.0 FT (RULING SPAN = 190.0 FT)

S- 4

| TEMP F | STRINGING SAG FT | STRINGING SAG IN | HORIZONTAL TENSION LB | FINAL SAG FT | FINAL SAG IN | HORIZONTAL TENSION LB |
|---|---|---|---|---|---|---|
| 0.0 | 0 | 3 | 3751.4 | 0 | 3 | 3315.5 |
| 10.0 | 0 | 3 | 3236.3 | 0 | 4 | 2778.0 |
| 30.0 | 0 | 4 | 2380.8 | 0 | 5 | 2015.9 |
| 40.0 | 0 | 5 | 2062.8 | 0 | 6 | 1765.8 |
| 50.0 | 0 | 6 | 1812.9 | 0 | 6 | 1575.4 |
| 60.0 | 0 | 6 | 1618.2 | 0 | 7 | 1428.0 |
| 70.0 | 0 | 7 | 1465.3 | 0 | 8 | 1311.1 |
| 80.0 | 0 | 8 | 1343.2 | 0 | 8 | 1216.3 |
| 90.0 | 0 | 8 | 1244.1 | 0 | 9 | 1138.1 |
| 100.0 | 0 | 9 | 1162.2 | 0 | 9 | 1072.2 |
| 110.0 | 0 | 9 | 1093.3 | 0 | 10 | 1016.0 |
| 120.0 | 0 | 10 | 1034.6 | 0 | 11 | 967.4 |
| 130.0 | 0 | 10 | 983.9 | 0 | 11 | 924.8 |
| 167.0 | 1 | 0 | 843.6 | 1 | 1 | 804.2 |
| 176.0 | 1 | 0 | 817.3 | 1 | 1 | 781.2 |
| 212.0 | 1 | 2 | 732.0 | 1 | 2 | 705.3 |

SPAN = 97.0 FT (RULING SPAN = 190.0 FT)

| TEMP F | STRINGING SAG FT | STRINGING SAG IN | HORIZONTAL TENSION LB | FINAL SAG FT | FINAL SAG IN | HORIZONTAL TENSION LB |
|---|---|---|---|---|---|---|
| 0.0 | 0 | 3 | 3751.4 | 0 | 4 | 3315.5 |
| 10.0 | 0 | 4 | 3236.3 | 0 | 5 | 2778.0 |
| 30.0 | 0 | 5 | 2380.8 | 0 | 6 | 2015.9 |
| 40.0 | 0 | 6 | 2062.8 | 0 | 7 | 1765.8 |
| 50.0 | 0 | 7 | 1812.9 | 0 | 8 | 1575.4 |
| 60.0 | 0 | 8 | 1618.2 | 0 | 9 | 1428.0 |
| 70.0 | 0 | 9 | 1465.3 | 0 | 10 | 1311.1 |
| 80.0 | 0 | 9 | 1343.2 | 0 | 10 | 1216.3 |
| 90.0 | 0 | 10 | 1244.1 | 0 | 11 | 1138.1 |
| 100.0 | 0 | 11 | 1162.2 | 1 | 0 | 1072.2 |
| 110.0 | 1 | 0 | 1093.3 | 1 | 0 | 1016.0 |
| 120.0 | 1 | 0 | 1034.6 | 1 | 1 | 967.4 |
| 130.0 | 1 | 1 | 983.9 | 1 | 2 | 924.8 |
| 167.0 | 1 | 3 | 843.6 | 1 | 4 | 804.2 |
| 176.0 | 1 | 3 | 817.3 | 1 | 4 | 781.2 |
| 212.0 | 1 | 5 | 732.0 | 1 | 6 | 705.3 |

SPAN = 107.0 FT (RULING SPAN = 190.0 FT)

S- 4

| TEMP F | STRINGING SAG FT | STRINGING SAG IN | HORIZONTAL TENSION LB | FINAL SAG FT | FINAL SAG IN | HORIZONTAL TENSION LB |
|---|---|---|---|---|---|---|
| 0.0 | 0 | 4 | 3751.4 | 0 | 5 | 3315.5 |
| 10.0 | 0 | 5 | 3236.3 | 0 | 6 | 2778.0 |
| 30.0 | 0 | 6 | 2380.8 | 0 | 8 | 2015.9 |
| 40.0 | 0 | 7 | 2062.8 | 0 | 9 | 1765.8 |
| 50.0 | 0 | 8 | 1812.9 | 0 | 10 | 1575.4 |
| 60.0 | 0 | 10 | 1618.2 | 0 | 11 | 1428.0 |
| 70.0 | 0 | 11 | 1465.3 | 1 | 0 | 1311.1 |
| 80.0 | 0 | 11 | 1343.2 | 1 | 1 | 1216.3 |
| 90.0 | 1 | 0 | 1244.1 | 1 | 2 | 1138.1 |
| 100.0 | 1 | 1 | 1162.2 | 1 | 2 | 1072.2 |
| 110.0 | 1 | 2 | 1093.3 | 1 | 3 | 1016.0 |
| 120.0 | 1 | 3 | 1034.6 | 1 | 4 | 967.4 |
| 130.0 | 1 | 4 | 983.9 | 1 | 5 | 924.8 |
| 167.0 | 1 | 6 | 843.6 | 1 | 7 | 804.2 |
| 176.0 | 1 | 7 | 817.3 | 1 | 8 | 781.2 |
| 212.0 | 1 | 9 | 732.0 | 1 | 10 | 705.3 |

SPAN = 117.0 FT (RULING SPAN = 190.0 FT)

| TEMP F | STRINGING SAG FT | STRINGING SAG IN | HORIZONTAL TENSION LB | FINAL SAG FT | FINAL SAG IN | HORIZONTAL TENSION LB |
|---|---|---|---|---|---|---|
| 0.0 | 0 | 5 | 3751.4 | 0 | 6 | 3315.5 |
| 10.0 | 0 | 6 | 3236.3 | 0 | 7 | 2778.0 |
| 30.0 | 0 | 8 | 2380.8 | 0 | 9 | 2015.9 |
| 40.0 | 0 | 9 | 2062.8 | 0 | 10 | 1765.8 |
| 50.0 | 0 | 10 | 1812.9 | 1 | 0 | 1575.4 |
| 60.0 | 0 | 11 | 1618.2 | 1 | 1 | 1428.0 |
| 70.0 | 1 | 1 | 1465.3 | 1 | 2 | 1311.1 |
| 80.0 | 1 | 2 | 1343.2 | 1 | 3 | 1216.3 |
| 90.0 | 1 | 3 | 1244.1 | 1 | 4 | 1138.1 |
| 100.0 | 1 | 4 | 1162.2 | 1 | 5 | 1072.2 |
| 110.0 | 1 | 5 | 1093.3 | 1 | 6 | 1016.0 |
| 120.0 | 1 | 6 | 1034.6 | 1 | 7 | 967.4 |
| 130.0 | 1 | 7 | 983.9 | 1 | 8 | 924.8 |
| 167.0 | 1 | 10 | 843.6 | 1 | 11 | 804.2 |
| 176.0 | 1 | 11 | 817.3 | 2 | 0 | 781.2 |
| 212.0 | 2 | 1 | 732.0 | 2 | 2 | 705.3 |

SPAN = 127.0 FT (RULING SPAN = 190.0 FT)

S- 4

| TEMP F | STRINGING SAG FT | STRINGING SAG IN | HORIZONTAL TENSION LB | FINAL SAG FT | FINAL SAG IN | HORIZONTAL TENSION LB |
|---|---|---|---|---|---|---|
| 0.0 | 0 | 6 | 3751.4 | 0 | 7 | 3315.5 |
| 10.0 | 0 | 7 | 3236.3 | 0 | 8 | 2778.0 |
| 30.0 | 0 | 9 | 2380.8 | 0 | 11 | 2015.9 |
| 40.0 | 0 | 11 | 2062.8 | 1 | 0 | 1765.8 |
| 50.0 | 1 | 0 | 1812.9 | 1 | 2 | 1575.4 |
| 60.0 | 1 | 1 | 1618.2 | 1 | 3 | 1428.0 |
| 70.0 | 1 | 3 | 1465.3 | 1 | 5 | 1311.1 |
| 80.0 | 1 | 4 | 1343.2 | 1 | 6 | 1216.3 |
| 90.0 | 1 | 5 | 1244.1 | 1 | 7 | 1138.1 |
| 100.0 | 1 | 7 | 1162.2 | 1 | 8 | 1072.2 |
| 110.0 | 1 | 8 | 1093.3 | 1 | 9 | 1016.0 |
| 120.0 | 1 | 9 | 1034.6 | 1 | 10 | 967.4 |
| 130.0 | 1 | 10 | 983.9 | 1 | 11 | 924.8 |
| 167.0 | 2 | 2 | 843.6 | 2 | 3 | 804.2 |
| 176.0 | 2 | 3 | 817.3 | 2 | 4 | 781.2 |
| 212.0 | 2 | 6 | 732.0 | 2 | 7 | 705.3 |

SPAN = 137.0 FT (RULING SPAN = 190.0 FT)

| TEMP F | STRINGING SAG FT | STRINGING SAG IN | HORIZONTAL TENSION LB | FINAL SAG FT | FINAL SAG IN | HORIZONTAL TENSION LB |
|---|---|---|---|---|---|---|
| 0.0 | 0 | 7 | 3751.4 | 0 | 8 | 3315.5 |
| 10.0 | 0 | 8 | 3236.3 | 0 | 9 | 2778.0 |
| 30.0 | 0 | 11 | 2380.8 | 1 | 1 | 2015.9 |
| 40.0 | 1 | 0 | 2062.8 | 1 | 2 | 1765.8 |
| 50.0 | 1 | 2 | 1812.9 | 1 | 4 | 1575.4 |
| 60.0 | 1 | 4 | 1618.2 | 1 | 6 | 1428.0 |
| 70.0 | 1 | 5 | 1465.3 | 1 | 7 | 1311.1 |
| 80.0 | 1 | 7 | 1343.2 | 1 | 9 | 1216.3 |
| 90.0 | 1 | 8 | 1244.1 | 1 | 10 | 1138.1 |
| 100.0 | 1 | 10 | 1162.2 | 2 | 0 | 1072.2 |
| 110.0 | 1 | 11 | 1093.3 | 2 | 1 | 1016.0 |
| 120.0 | 2 | 0 | 1034.6 | 2 | 2 | 967.4 |
| 130.0 | 2 | 2 | 983.9 | 2 | 3 | 924.8 |
| 167.0 | 2 | 6 | 843.6 | 2 | 7 | 804.2 |
| 176.0 | 2 | 7 | 817.3 | 2 | 8 | 781.2 |
| 212.0 | 2 | 10 | 732.0 | 3 | 0 | 705.3 |

SPAN = 147.0 FT (RULING SPAN = 190.0 FT)

S- 4

| TEMP F | STRINGING SAG FT | STRINGING SAG IN | HORIZONTAL TENSION LB | FINAL SAG FT | FINAL SAG IN | HORIZONTAL TENSION LB |
|---|---|---|---|---|---|---|
| 0.0 | 0 | 8 | 3751.4 | 0 | 9 | 3315.5 |
| 10.0 | 0 | 9 | 3236.3 | 0 | 10 | 2778.0 |
| 30.0 | 1 | 0 | 2380.8 | 1 | 2 | 2015.9 |
| 40.0 | 1 | 2 | 2062.8 | 1 | 4 | 1765.8 |
| 50.0 | 1 | 4 | 1812.9 | 1 | 6 | 1575.4 |
| 60.0 | 1 | 6 | 1618.2 | 1 | 8 | 1428.0 |
| 70.0 | 1 | 8 | 1465.3 | 1 | 10 | 1311.1 |
| 80.0 | 1 | 10 | 1343.2 | 2 | 0 | 1216.3 |
| 90.0 | 1 | 11 | 1244.1 | 2 | 2 | 1138.1 |
| 100.0 | 2 | 1 | 1162.2 | 2 | 3 | 1072.2 |
| 110.0 | 2 | 3 | 1093.3 | 2 | 5 | 1016.0 |
| 120.0 | 2 | 4 | 1034.6 | 2 | 6 | 967.4 |
| 130.0 | 2 | 6 | 983.9 | 2 | 7 | 924.8 |
| 167.0 | 2 | 10 | 843.6 | 3 | 0 | 804.2 |
| 176.0 | 3 | 0 | 817.3 | 3 | 1 | 781.2 |
| 212.0 | 3 | 4 | 732.0 | 3 | 5 | 705.3 |

SPAN = 157.0 FT (RULING SPAN = 190.0 FT)

| TEMP F | STRINGING SAG FT | STRINGING SAG IN | HORIZONTAL TENSION LB | FINAL SAG FT | FINAL SAG IN | HORIZONTAL TENSION LB |
|---|---|---|---|---|---|---|
| 0.0 | 0 | 9 | 3751.4 | 0 | 10 | 3315.5 |
| 10.0 | 0 | 10 | 3236.3 | 1 | 0 | 2778.0 |
| 30.0 | 1 | 2 | 2380.8 | 1 | 4 | 2015.9 |
| 40.0 | 1 | 4 | 2062.8 | 1 | 7 | 1765.8 |
| 50.0 | 1 | 6 | 1812.9 | 1 | 9 | 1575.4 |
| 60.0 | 1 | 8 | 1618.2 | 1 | 11 | 1428.0 |
| 70.0 | 1 | 11 | 1465.3 | 2 | 1 | 1311.1 |
| 80.0 | 2 | 1 | 1343.2 | 2 | 3 | 1216.3 |
| 90.0 | 2 | 3 | 1244.1 | 2 | 5 | 1138.1 |
| 100.0 | 2 | 5 | 1162.2 | 2 | 7 | 1072.2 |
| 110.0 | 2 | 6 | 1093.3 | 2 | 9 | 1016.0 |
| 120.0 | 2 | 8 | 1034.6 | 2 | 10 | 967.4 |
| 130.0 | 2 | 10 | 983.9 | 3 | 0 | 924.8 |
| 167.0 | 3 | 3 | 843.6 | 3 | 5 | 804.2 |
| 176.0 | 3 | 5 | 817.3 | 3 | 6 | 781.2 |
| 212.0 | 3 | 9 | 732.0 | 3 | 11 | 705.3 |

SPAN = 167.0 FT (RULING SPAN = 190.0 FT)

S- 4

| TEMP F | STRINGING SAG FT | STRINGING SAG IN | HORIZONTAL TENSION LB | FINAL SAG FT | FINAL SAG IN | HORIZONTAL TENSION LB |
|---|---|---|---|---|---|---|
| 0.0 | 0 | 10 | 3751.4 | 0 | 11 | 3315.5 |
| 10.0 | 1 | 0 | 3236.3 | 1 | 1 | 2778.0 |
| 30.0 | 1 | 4 | 2380.8 | 1 | 7 | 2015.9 |
| 40.0 | 1 | 6 | 2062.8 | 1 | 9 | 1765.8 |
| 50.0 | 1 | 9 | 1812.9 | 2 | 0 | 1575.4 |
| 60.0 | 1 | 11 | 1618.2 | 2 | 2 | 1428.0 |
| 70.0 | 2 | 2 | 1465.3 | 2 | 5 | 1311.1 |
| 80.0 | 2 | 4 | 1343.2 | 2 | 7 | 1216.3 |
| 90.0 | 2 | 6 | 1244.1 | 2 | 9 | 1138.1 |
| 100.0 | 2 | 8 | 1162.2 | 2 | 11 | 1072.2 |
| 110.0 | 2 | 10 | 1093.3 | 3 | 1 | 1016.0 |
| 120.0 | 3 | 0 | 1034.6 | 3 | 3 | 967.4 |
| 130.0 | 3 | 2 | 983.9 | 3 | 5 | 924.8 |
| 167.0 | 3 | 8 | 843.6 | 3 | 11 | 804.2 |
| 176.0 | 3 | 10 | 817.3 | 4 | 0 | 781.2 |
| 212.0 | 4 | 3 | 732.0 | 4 | 5 | 705.3 |

SPAN = 177.0 FT (RULING SPAN = 190.0 FT)

| TEMP F | STRINGING SAG FT | STRINGING SAG IN | HORIZONTAL TENSION LB | FINAL SAG FT | FINAL SAG IN | HORIZONTAL TENSION LB |
|---|---|---|---|---|---|---|
| 0.0 | 0 | 11 | 3751.4 | 1 | 1 | 3315.5 |
| 10.0 | 1 | 1 | 3236.3 | 1 | 3 | 2778.0 |
| 30.0 | 1 | 6 | 2380.8 | 1 | 9 | 2015.9 |
| 40.0 | 1 | 8 | 2062.8 | 2 | 0 | 1765.8 |
| 50.0 | 1 | 11 | 1812.9 | 2 | 3 | 1575.4 |
| 60.0 | 2 | 2 | 1618.2 | 2 | 5 | 1428.0 |
| 70.0 | 2 | 5 | 1465.3 | 2 | 8 | 1311.1 |
| 80.0 | 2 | 7 | 1343.2 | 2 | 11 | 1216.3 |
| 90.0 | 2 | 10 | 1244.1 | 3 | 1 | 1138.1 |
| 100.0 | 3 | 0 | 1162.2 | 3 | 3 | 1072.2 |
| 110.0 | 3 | 3 | 1093.3 | 3 | 5 | 1016.0 |
| 120.0 | 3 | 5 | 1034.6 | 3 | 8 | 967.4 |
| 130.0 | 3 | 7 | 983.9 | 3 | 10 | 924.8 |
| 167.0 | 4 | 2 | 843.6 | 4 | 4 | 804.2 |
| 176.0 | 4 | 4 | 817.3 | 4 | 6 | 781.2 |
| 212.0 | 4 | 10 | 732.0 | 5 | 0 | 705.3 |

SPAN = 187.0 FT (RULING SPAN = 190.0 FT)

S- 4

| TEMP F | STRINGING SAG FT | STRINGING SAG IN | HORIZONTAL TENSION LB | FINAL SAG FT | FINAL SAG IN | HORIZONTAL TENSION LB |
|---|---|---|---|---|---|---|
| 0.0 | 1 | 1 | 3751.4 | 1 | 2 | 3315.5 |
| 10.0 | 1 | 3 | 3236.3 | 1 | 5 | 2778.0 |
| 30.0 | 1 | 8 | 2380.8 | 1 | 11 | 2015.9 |
| 40.0 | 1 | 11 | 2062.8 | 2 | 3 | 1765.8 |
| 50.0 | 2 | 2 | 1812.9 | 2 | 6 | 1575.4 |
| 60.0 | 2 | 5 | 1618.2 | 2 | 9 | 1428.0 |
| 70.0 | 2 | 8 | 1465.3 | 3 | 0 | 1311.1 |
| 80.0 | 2 | 11 | 1343.2 | 3 | 3 | 1216.3 |
| 90.0 | 3 | 2 | 1244.1 | 3 | 5 | 1138.1 |
| 100.0 | 3 | 4 | 1162.2 | 3 | 8 | 1072.2 |
| 110.0 | 3 | 7 | 1093.3 | 3 | 10 | 1016.0 |
| 120.0 | 3 | 9 | 1034.6 | 4 | 1 | 967.4 |
| 130.0 | 4 | 0 | 983.9 | 4 | 3 | 924.8 |
| 167.0 | 4 | 8 | 843.6 | 4 | 10 | 804.2 |
| 176.0 | 4 | 10 | 817.3 | 5 | 0 | 781.2 |
| 212.0 | 5 | 4 | 732.0 | 5 | 7 | 705.3 |

SPAN = 197.0 FT (RULING SPAN = 190.0 FT)

| TEMP F | STRINGING SAG FT | STRINGING SAG IN | HORIZONTAL TENSION LB | FINAL SAG FT | FINAL SAG IN | HORIZONTAL TENSION LB |
|---|---|---|---|---|---|---|
| 0.0 | 1 | 2 | 3751.4 | 1 | 4 | 3315.5 |
| 10.0 | 1 | 4 | 3236.3 | 1 | 7 | 2778.0 |
| 30.0 | 1 | 10 | 2380.8 | 2 | 2 | 2015.9 |
| 40.0 | 2 | 1 | 2062.8 | 2 | 6 | 1765.8 |
| 50.0 | 2 | 5 | 1812.9 | 2 | 9 | 1575.4 |
| 60.0 | 2 | 8 | 1618.2 | 3 | 1 | 1428.0 |
| 70.0 | 3 | 0 | 1465.3 | 3 | 4 | 1311.1 |
| 80.0 | 3 | 3 | 1343.2 | 3 | 7 | 1216.3 |
| 90.0 | 3 | 6 | 1244.1 | 3 | 10 | 1138.1 |
| 100.0 | 3 | 9 | 1162.2 | 4 | 1 | 1072.2 |
| 110.0 | 4 | 0 | 1093.3 | 4 | 3 | 1016.0 |
| 120.0 | 4 | 2 | 1034.6 | 4 | 6 | 967.4 |
| 130.0 | 4 | 5 | 983.9 | 4 | 8 | 924.8 |
| 167.0 | 5 | 2 | 843.6 | 5 | 5 | 804.2 |
| 176.0 | 5 | 4 | 817.3 | 5 | 7 | 781.2 |
| 212.0 | 5 | 11 | 732.0 | 6 | 2 | 705.3 |

SPAN = 207.0 FT (RULING SPAN = 190.0 FT)

S- 4

| TEMP F | STRINGING SAG FT | STRINGING SAG IN | HORIZONTAL TENSION LB | FINAL SAG FT | FINAL SAG IN | HORIZONTAL TENSION LB |
|---|---|---|---|---|---|---|
| 0.0 | 1 | 3 | 3751.4 | 1 | 5 | 3315.5 |
| 10.0 | 1 | 6 | 3236.3 | 1 | 9 | 2778.0 |
| 30.0 | 2 | 0 | 2380.8 | 2 | 5 | 2015.9 |
| 40.0 | 2 | 4 | 2062.8 | 2 | 9 | 1765.8 |
| 50.0 | 2 | 8 | 1812.9 | 3 | 1 | 1575.4 |
| 60.0 | 3 | 0 | 1618.2 | 3 | 4 | 1428.0 |
| 70.0 | 3 | 3 | 1465.3 | 3 | 8 | 1311.1 |
| 80.0 | 3 | 7 | 1343.2 | 3 | 11 | 1216.3 |
| 90.0 | 3 | 10 | 1244.1 | 4 | 3 | 1138.1 |
| 100.0 | 4 | 2 | 1162.2 | 4 | 6 | 1072.2 |
| 110.0 | 4 | 5 | 1093.3 | 4 | 9 | 1016.0 |
| 120.0 | 4 | 8 | 1034.6 | 5 | 0 | 967.4 |
| 130.0 | 4 | 11 | 983.9 | 5 | 2 | 924.8 |
| 167.0 | 5 | 8 | 843.6 | 6 | 0 | 804.2 |
| 176.0 | 5 | 11 | 817.3 | 6 | 2 | 781.2 |
| 212.0 | 6 | 7 | 732.0 | 6 | 10 | 705.3 |

SPAN = 217.0 FT (RULING SPAN = 190.0 FT)

| TEMP F | STRINGING SAG FT | STRINGING SAG IN | HORIZONTAL TENSION LB | FINAL SAG FT | FINAL SAG IN | HORIZONTAL TENSION LB |
|---|---|---|---|---|---|---|
| 0.0 | 1 | 5 | 3751.4 | 1 | 7 | 3315.5 |
| 10.0 | 1 | 8 | 3236.3 | 1 | 11 | 2778.0 |
| 30.0 | 2 | 3 | 2380.8 | 2 | 7 | 2015.9 |
| 40.0 | 2 | 7 | 2062.8 | 3 | 0 | 1765.8 |
| 50.0 | 2 | 11 | 1812.9 | 3 | 4 | 1575.4 |
| 60.0 | 3 | 3 | 1618.2 | 3 | 8 | 1428.0 |
| 70.0 | 3 | 7 | 1465.3 | 4 | 0 | 1311.1 |
| 80.0 | 3 | 11 | 1343.2 | 4 | 4 | 1216.3 |
| 90.0 | 4 | 3 | 1244.1 | 4 | 8 | 1138.1 |
| 100.0 | 4 | 6 | 1162.2 | 4 | 11 | 1072.2 |
| 110.0 | 4 | 10 | 1093.3 | 5 | 2 | 1016.0 |
| 120.0 | 5 | 1 | 1034.6 | 5 | 5 | 967.4 |
| 130.0 | 5 | 4 | 983.9 | 5 | 8 | 924.8 |
| 167.0 | 6 | 3 | 843.6 | 6 | 7 | 804.2 |
| 176.0 | 6 | 6 | 817.3 | 6 | 9 | 781.2 |
| 212.0 | 7 | 3 | 732.0 | 7 | 6 | 705.3 |

SPAN = 227.0 FT (RULING SPAN = 190.0 FT)

S- 4

| TEMP F | STRINGING SAG FT | STRINGING SAG IN | HORIZONTAL TENSION LB | FINAL SAG FT | FINAL SAG IN | HORIZONTAL TENSION LB |
|---|---|---|---|---|---|---|
| 0.0 | 1 | 6 | 3751.4 | 1 | 9 | 3315.5 |
| 10.0 | 1 | 9 | 3236.3 | 2 | 1 | 2778.0 |
| 30.0 | 2 | 5 | 2380.8 | 2 | 10 | 2015.9 |
| 40.0 | 2 | 10 | 2062.8 | 3 | 3 | 1765.8 |
| 50.0 | 3 | 2 | 1812.9 | 3 | 8 | 1575.4 |
| 60.0 | 3 | 7 | 1618.2 | 4 | 1 | 1428.0 |
| 70.0 | 3 | 11 | 1465.3 | 4 | 5 | 1311.1 |
| 80.0 | 4 | 4 | 1343.2 | 4 | 9 | 1216.3 |
| 90.0 | 4 | 8 | 1244.1 | 5 | 1 | 1138.1 |
| 100.0 | 5 | 0 | 1162.2 | 5 | 5 | 1072.2 |
| 110.0 | 5 | 3 | 1093.3 | 5 | 8 | 1016.0 |
| 120.0 | 5 | 7 | 1034.6 | 6 | 0 | 967.4 |
| 130.0 | 5 | 10 | 983.9 | 6 | 3 | 924.8 |
| 167.0 | 6 | 10 | 843.6 | 7 | 2 | 804.2 |
| 176.0 | 7 | 1 | 817.3 | 7 | 5 | 781.2 |
| 212.0 | 7 | 11 | 732.0 | 8 | 2 | 705.3 |

SOUTHWIRE COMPANY
CARROLLTON, GEORGIA

STRINGING TABLE
(CATENARY METHOD)

CHART NO: S- 5
FILE NO: 40058
DATE: 08/21/06

RULING SPAN = 192.0 FT

LOADING DISTRICT: LIGHT

CONDUCTOR: 954 KCM - 37 STR. AAC "MAGNOLIA"

NOTE: FOR STRINGING CALCULATIONS, THE HORIZONTAL TENSION OF THE RULING SPAN IS HELD CONSTANT (FOR EACH PARTICULAR TEMPERATURE) IN ORDER TO CALCULATE STRINGING SAGS FOR THE OTHER SPANS. THE FINAL DATA IS TO BE USED FOR PRE-STRESSED CABLE ONLY.

SPAN = 121.0 FT

(RULING SPAN = 192.0 FT)

| TEMP | STRINGING SAG | | HORIZONTAL TENSION | FINAL SAG | | HORIZONTAL TENSION |
|---|---|---|---|---|---|---|
| F | FT | IN | LB | FT | IN | LB |
| 0.0 | 0 | 5 | 3737.5 | 0 | 6 | 3297.6 |
| 10.0 | 0 | 6 | 3225.8 | 0 | 7 | 2766.9 |
| 30.0 | 0 | 8 | 2378.9 | 0 | 10 | 2015.9 |
| 40.0 | 0 | 10 | 2064.5 | 0 | 11 | 1769.0 |
| 50.0 | 0 | 11 | 1817.3 | 1 | 0 | 1580.6 |
| 60.0 | 1 | 0 | 1624.3 | 1 | 2 | 1434.3 |
| 70.0 | 1 | 1 | 1472.3 | 1 | 3 | 1318.0 |
| 80.0 | 1 | 3 | 1350.8 | 1 | 4 | 1223.6 |
| 90.0 | 1 | 4 | 1252.0 | 1 | 5 | 1145.5 |
| 100.0 | 1 | 5 | 1170.1 | 1 | 6 | 1079.7 |
| 110.0 | 1 | 6 | 1101.3 | 1 | 7 | 1023.5 |
| 120.0 | 1 | 7 | 1042.5 | 1 | 8 | 974.7 |
| 130.0 | 1 | 8 | 991.6 | 1 | 9 | 932.1 |
| 167.0 | 1 | 11 | 850.8 | 2 | 0 | 811.1 |
| 176.0 | 2 | 0 | 824.5 | 2 | 1 | 788.0 |
| 212.0 | 2 | 3 | 738.7 | 2 | 4 | 711.6 |

SPAN = 131.0 FT (RULING SPAN = 192.0 FT)

S- 5

| TEMP F | STRINGING SAG FT | STRINGING SAG IN | HORIZONTAL TENSION LB | FINAL SAG FT | FINAL SAG IN | HORIZONTAL TENSION LB |
|---|---|---|---|---|---|---|
| 0.0 | 0 | 6 | 3737.5 | 0 | 7 | 3297.6 |
| 10.0 | 0 | 7 | 3225.8 | 0 | 8 | 2766.9 |
| 30.0 | 0 | 10 | 2378.9 | 0 | 11 | 2015.9 |
| 40.0 | 0 | 11 | 2064.5 | 1 | 1 | 1769.0 |
| 50.0 | 1 | 1 | 1817.3 | 1 | 3 | 1580.6 |
| 60.0 | 1 | 2 | 1624.3 | 1 | 4 | 1434.3 |
| 70.0 | 1 | 4 | 1472.3 | 1 | 5 | 1318.0 |
| 80.0 | 1 | 5 | 1350.8 | 1 | 7 | 1223.6 |
| 90.0 | 1 | 6 | 1252.0 | 1 | 8 | 1145.5 |
| 100.0 | 1 | 8 | 1170.1 | 1 | 9 | 1079.7 |
| 110.0 | 1 | 9 | 1101.3 | 1 | 11 | 1023.5 |
| 120.0 | 1 | 10 | 1042.5 | 2 | 0 | 974.7 |
| 130.0 | 1 | 11 | 991.6 | 2 | 1 | 932.1 |
| 167.0 | 2 | 3 | 850.8 | 2 | 4 | 811.1 |
| 176.0 | 2 | 4 | 824.5 | 2 | 5 | 788.0 |
| 212.0 | 2 | 7 | 738.7 | 2 | 8 | 711.6 |

SPAN = 141.0 FT (RULING SPAN = 192.0 FT)

| TEMP F | STRINGING SAG FT | STRINGING SAG IN | HORIZONTAL TENSION LB | FINAL SAG FT | FINAL SAG IN | HORIZONTAL TENSION LB |
|---|---|---|---|---|---|---|
| 0.0 | 0 | 7 | 3737.5 | 0 | 8 | 3297.6 |
| 10.0 | 0 | 8 | 3225.8 | 0 | 10 | 2766.9 |
| 30.0 | 0 | 11 | 2378.9 | 1 | 1 | 2015.9 |
| 40.0 | 1 | 1 | 2064.5 | 1 | 3 | 1769.0 |
| 50.0 | 1 | 3 | 1817.3 | 1 | 5 | 1580.6 |
| 60.0 | 1 | 4 | 1624.3 | 1 | 7 | 1434.3 |
| 70.0 | 1 | 6 | 1472.3 | 1 | 8 | 1318.0 |
| 80.0 | 1 | 8 | 1350.8 | 1 | 10 | 1223.6 |
| 90.0 | 1 | 9 | 1252.0 | 1 | 11 | 1145.5 |
| 100.0 | 1 | 11 | 1170.1 | 2 | 1 | 1079.7 |
| 110.0 | 2 | 0 | 1101.3 | 2 | 2 | 1023.5 |
| 120.0 | 2 | 2 | 1042.5 | 2 | 3 | 974.7 |
| 130.0 | 2 | 3 | 991.6 | 2 | 5 | 932.1 |
| 167.0 | 2 | 7 | 850.8 | 2 | 9 | 811.1 |
| 176.0 | 2 | 8 | 824.5 | 2 | 10 | 788.0 |
| 212.0 | 3 | 0 | 738.7 | 3 | 2 | 711.6 |

SPAN = 151.0 FT (RULING SPAN = 192.0 FT)

S- 5

| TEMP F | STRINGING SAG FT | STRINGING SAG IN | HORIZONTAL TENSION LB | FINAL SAG FT | FINAL SAG IN | HORIZONTAL TENSION LB |
|---|---|---|---|---|---|---|
| 0.0 | 0 | 8 | 3737.5 | 0 | 9 | 3297.6 |
| 10.0 | 0 | 9 | 3225.8 | 0 | 11 | 2766.9 |
| 30.0 | 1 | 1 | 2378.9 | 1 | 3 | 2015.9 |
| 40.0 | 1 | 3 | 2064.5 | 1 | 5 | 1769.0 |
| 50.0 | 1 | 5 | 1817.3 | 1 | 7 | 1580.6 |
| 60.0 | 1 | 7 | 1624.3 | 1 | 9 | 1434.3 |
| 70.0 | 1 | 9 | 1472.3 | 1 | 11 | 1318.0 |
| 80.0 | 1 | 11 | 1350.8 | 2 | 1 | 1223.6 |
| 90.0 | 2 | 0 | 1252.0 | 2 | 3 | 1145.5 |
| 100.0 | 2 | 2 | 1170.1 | 2 | 4 | 1079.7 |
| 110.0 | 2 | 4 | 1101.3 | 2 | 6 | 1023.5 |
| 120.0 | 2 | 5 | 1042.5 | 2 | 7 | 974.7 |
| 130.0 | 2 | 7 | 991.6 | 2 | 9 | 932.1 |
| 167.0 | 3 | 0 | 850.8 | 3 | 2 | 811.1 |
| 176.0 | 3 | 1 | 824.5 | 3 | 3 | 788.0 |
| 212.0 | 3 | 6 | 738.7 | 3 | 7 | 711.6 |

SPAN = 161.0 FT (RULING SPAN = 192.0 FT)

| TEMP F | STRINGING SAG FT | STRINGING SAG IN | HORIZONTAL TENSION LB | FINAL SAG FT | FINAL SAG IN | HORIZONTAL TENSION LB |
|---|---|---|---|---|---|---|
| 0.0 | 0 | 9 | 3737.5 | 0 | 11 | 3297.6 |
| 10.0 | 0 | 11 | 3225.8 | 1 | 1 | 2766.9 |
| 30.0 | 1 | 3 | 2378.9 | 1 | 5 | 2015.9 |
| 40.0 | 1 | 5 | 2064.5 | 1 | 8 | 1769.0 |
| 50.0 | 1 | 7 | 1817.3 | 1 | 10 | 1580.6 |
| 60.0 | 1 | 9 | 1624.3 | 2 | 0 | 1434.3 |
| 70.0 | 2 | 0 | 1472.3 | 2 | 2 | 1318.0 |
| 80.0 | 2 | 2 | 1350.8 | 2 | 4 | 1223.6 |
| 90.0 | 2 | 4 | 1252.0 | 2 | 6 | 1145.5 |
| 100.0 | 2 | 6 | 1170.1 | 2 | 8 | 1079.7 |
| 110.0 | 2 | 8 | 1101.3 | 2 | 10 | 1023.5 |
| 120.0 | 2 | 9 | 1042.5 | 3 | 0 | 974.7 |
| 130.0 | 2 | 11 | 991.6 | 3 | 1 | 932.1 |
| 167.0 | 3 | 5 | 850.8 | 3 | 7 | 811.1 |
| 176.0 | 3 | 6 | 824.5 | 3 | 8 | 788.0 |
| 212.0 | 3 | 11 | 738.7 | 4 | 1 | 711.6 |

SPAN = 171.0 FT (RULING SPAN = 192.0 FT)

S- 5

| TEMP F | STRINGING SAG FT | STRINGING SAG IN | HORIZONTAL TENSION LB | FINAL SAG FT | FINAL SAG IN | HORIZONTAL TENSION LB |
|---|---|---|---|---|---|---|
| 0.0 | 0 | 11 | 3737.5 | 1 | 0 | 3297.6 |
| 10.0 | 1 | 0 | 3225.8 | 1 | 2 | 2766.9 |
| 30.0 | 1 | 5 | 2378.9 | 1 | 7 | 2015.9 |
| 40.0 | 1 | 7 | 2064.5 | 1 | 10 | 1769.0 |
| 50.0 | 1 | 10 | 1817.3 | 2 | 1 | 1580.6 |
| 60.0 | 2 | 0 | 1624.3 | 2 | 3 | 1434.3 |
| 70.0 | 2 | 3 | 1472.3 | 2 | 6 | 1318.0 |
| 80.0 | 2 | 5 | 1350.8 | 2 | 8 | 1223.6 |
| 90.0 | 2 | 7 | 1252.0 | 2 | 10 | 1145.5 |
| 100.0 | 2 | 10 | 1170.1 | 3 | 0 | 1079.7 |
| 110.0 | 3 | 0 | 1101.3 | 3 | 2 | 1023.5 |
| 120.0 | 3 | 2 | 1042.5 | 3 | 4 | 974.7 |
| 130.0 | 3 | 4 | 991.6 | 3 | 6 | 932.1 |
| 167.0 | 3 | 10 | 850.8 | 4 | 0 | 811.1 |
| 176.0 | 4 | 0 | 824.5 | 4 | 2 | 788.0 |
| 212.0 | 4 | 5 | 738.7 | 4 | 7 | 711.6 |

SPAN = 181.0 FT (RULING SPAN = 192.0 FT)

| TEMP F | STRINGING SAG FT | STRINGING SAG IN | HORIZONTAL TENSION LB | FINAL SAG FT | FINAL SAG IN | HORIZONTAL TENSION LB |
|---|---|---|---|---|---|---|
| 0.0 | 1 | 0 | 3737.5 | 1 | 1 | 3297.6 |
| 10.0 | 1 | 2 | 3225.8 | 1 | 4 | 2766.9 |
| 30.0 | 1 | 7 | 2378.9 | 1 | 10 | 2015.9 |
| 40.0 | 1 | 9 | 2064.5 | 2 | 1 | 1769.0 |
| 50.0 | 2 | 0 | 1817.3 | 2 | 4 | 1580.6 |
| 60.0 | 2 | 3 | 1624.3 | 2 | 7 | 1434.3 |
| 70.0 | 2 | 6 | 1472.3 | 2 | 9 | 1318.0 |
| 80.0 | 2 | 9 | 1350.8 | 3 | 0 | 1223.6 |
| 90.0 | 2 | 11 | 1252.0 | 3 | 2 | 1145.5 |
| 100.0 | 3 | 2 | 1170.1 | 3 | 5 | 1079.7 |
| 110.0 | 3 | 4 | 1101.3 | 3 | 7 | 1023.5 |
| 120.0 | 3 | 6 | 1042.5 | 3 | 9 | 974.7 |
| 130.0 | 3 | 8 | 991.6 | 3 | 11 | 932.1 |
| 167.0 | 4 | 4 | 850.8 | 4 | 6 | 811.1 |
| 176.0 | 4 | 5 | 824.5 | 4 | 8 | 788.0 |
| 212.0 | 5 | 0 | 738.7 | 5 | 2 | 711.6 |

SPAN = 191.0 FT (RULING SPAN = 192.0 FT)

S- 5

| TEMP F | STRINGING SAG FT | STRINGING SAG IN | HORIZONTAL TENSION LB | FINAL SAG FT | FINAL SAG IN | HORIZONTAL TENSION LB |
|---|---|---|---|---|---|---|
| 0.0 | 1 | 1 | 3737.5 | 1 | 3 | 3297.6 |
| 10.0 | 1 | 3 | 3225.8 | 1 | 6 | 2766.9 |
| 30.0 | 1 | 9 | 2378.9 | 2 | 0 | 2015.9 |
| 40.0 | 2 | 0 | 2064.5 | 2 | 4 | 1769.0 |
| 50.0 | 2 | 3 | 1817.3 | 2 | 7 | 1580.6 |
| 60.0 | 2 | 6 | 1624.3 | 2 | 10 | 1434.3 |
| 70.0 | 2 | 9 | 1472.3 | 3 | 1 | 1318.0 |
| 80.0 | 3 | 0 | 1350.8 | 3 | 4 | 1223.6 |
| 90.0 | 3 | 3 | 1252.0 | 3 | 7 | 1145.5 |
| 100.0 | 3 | 6 | 1170.1 | 3 | 9 | 1079.7 |
| 110.0 | 3 | 9 | 1101.3 | 4 | 0 | 1023.5 |
| 120.0 | 3 | 11 | 1042.5 | 4 | 2 | 974.7 |
| 130.0 | 4 | 1 | 991.6 | 4 | 5 | 932.1 |
| 167.0 | 4 | 10 | 850.8 | 5 | 0 | 811.1 |
| 176.0 | 5 | 0 | 824.5 | 5 | 2 | 788.0 |
| 212.0 | 5 | 6 | 738.7 | 5 | 9 | 711.6 |

SPAN = 201.0 FT (RULING SPAN = 192.0 FT)

| TEMP F | STRINGING SAG FT | STRINGING SAG IN | HORIZONTAL TENSION LB | FINAL SAG FT | FINAL SAG IN | HORIZONTAL TENSION LB |
|---|---|---|---|---|---|---|
| 0.0 | 1 | 3 | 3737.5 | 1 | 4 | 3297.6 |
| 10.0 | 1 | 5 | 3225.8 | 1 | 8 | 2766.9 |
| 30.0 | 1 | 11 | 2378.9 | 2 | 3 | 2015.9 |
| 40.0 | 2 | 2 | 2064.5 | 2 | 7 | 1769.0 |
| 50.0 | 2 | 6 | 1817.3 | 2 | 10 | 1580.6 |
| 60.0 | 2 | 9 | 1624.3 | 3 | 2 | 1434.3 |
| 70.0 | 3 | 1 | 1472.3 | 3 | 5 | 1318.0 |
| 80.0 | 3 | 4 | 1350.8 | 3 | 8 | 1223.6 |
| 90.0 | 3 | 7 | 1252.0 | 3 | 11 | 1145.5 |
| 100.0 | 3 | 10 | 1170.1 | 4 | 2 | 1079.7 |
| 110.0 | 4 | 1 | 1101.3 | 4 | 5 | 1023.5 |
| 120.0 | 4 | 4 | 1042.5 | 4 | 8 | 974.7 |
| 130.0 | 4 | 7 | 991.6 | 4 | 10 | 932.1 |
| 167.0 | 5 | 4 | 850.8 | 5 | 7 | 811.1 |
| 176.0 | 5 | 6 | 824.5 | 5 | 9 | 788.0 |
| 212.0 | 6 | 2 | 738.7 | 6 | 4 | 711.6 |

SOUTHWIRE COMPANY
CARROLLTON, GEORGIA

STRINGING TABLE
(CATENARY METHOD)

CHART NO: S- 6
FILE NO: 40058
DATE: 08/21/06

RULING SPAN = 199.0 FT

LOADING DISTRICT: LIGHT

CONDUCTOR: 954 KCM - 37 STR. AAC "MAGNOLIA"

NOTE: FOR STRINGING CALCULATIONS, THE HORIZONTAL TENSION OF THE RULING SPAN IS HELD CONSTANT (FOR EACH PARTICULAR TEMPERATURE) IN ORDER TO CALCULATE STRINGING SAGS FOR THE OTHER SPANS. THE FINAL DATA IS TO BE USED FOR PRE-STRESSED CABLE ONLY.

SPAN = 116.0 FT

(RULING SPAN = 199.0 FT)

| TEMP | STRINGING SAG | | HORIZONTAL TENSION | FINAL SAG | | HORIZONTAL TENSION |
|---|---|---|---|---|---|---|
| F | FT | IN | LB | FT | IN | LB |
| 0.0 | 0 | 5 | 3688.5 | 0 | 6 | 3237.1 |
| 10.0 | 0 | 6 | 3189.6 | 0 | 7 | 2730.3 |
| 30.0 | 0 | 8 | 2372.8 | 0 | 9 | 2016.8 |
| 40.0 | 0 | 9 | 2070.7 | 0 | 10 | 1780.3 |
| 50.0 | 0 | 10 | 1832.3 | 0 | 11 | 1598.5 |
| 60.0 | 0 | 11 | 1644.9 | 1 | 0 | 1456.0 |
| 70.0 | 1 | 0 | 1496.4 | 1 | 1 | 1341.9 |
| 80.0 | 1 | 1 | 1376.8 | 1 | 2 | 1248.7 |
| 90.0 | 1 | 2 | 1278.9 | 1 | 3 | 1171.2 |
| 100.0 | 1 | 3 | 1197.5 | 1 | 4 | 1105.5 |
| 110.0 | 1 | 4 | 1128.6 | 1 | 5 | 1049.2 |
| 120.0 | 1 | 5 | 1069.6 | 1 | 6 | 1000.3 |
| 130.0 | 1 | 6 | 1018.5 | 1 | 7 | 957.4 |
| 167.0 | 1 | 9 | 876.0 | 1 | 10 | 834.9 |
| 176.0 | 1 | 9 | 849.2 | 1 | 10 | 811.5 |
| 212.0 | 2 | 0 | 761.8 | 2 | 1 | 733.8 |

SPAN = 126.0 FT (RULING SPAN = 199.0 FT)

S- 6

| TEMP F | STRINGING SAG FT | STRINGING SAG IN | HORIZONTAL TENSION LB | FINAL SAG FT | FINAL SAG IN | HORIZONTAL TENSION LB |
|---|---|---|---|---|---|---|
| 0.0 | 0 | 6 | 3688.5 | 0 | 7 | 3237.1 |
| 10.0 | 0 | 7 | 3189.6 | 0 | 8 | 2730.3 |
| 30.0 | 0 | 9 | 2372.8 | 0 | 11 | 2016.8 |
| 40.0 | 0 | 10 | 2070.7 | 1 | 0 | 1780.3 |
| 50.0 | 1 | 0 | 1832.3 | 1 | 1 | 1598.5 |
| 60.0 | 1 | 1 | 1644.9 | 1 | 3 | 1456.0 |
| 70.0 | 1 | 2 | 1496.4 | 1 | 4 | 1341.9 |
| 80.0 | 1 | 3 | 1376.8 | 1 | 5 | 1248.7 |
| 90.0 | 1 | 5 | 1278.9 | 1 | 6 | 1171.2 |
| 100.0 | 1 | 6 | 1197.5 | 1 | 7 | 1105.5 |
| 110.0 | 1 | 7 | 1128.6 | 1 | 8 | 1049.2 |
| 120.0 | 1 | 8 | 1069.6 | 1 | 9 | 1000.3 |
| 130.0 | 1 | 9 | 1018.5 | 1 | 10 | 957.4 |
| 167.0 | 2 | 0 | 876.0 | 2 | 2 | 834.9 |
| 176.0 | 2 | 1 | 849.2 | 2 | 2 | 811.5 |
| 212.0 | 2 | 4 | 761.8 | 2 | 5 | 733.8 |

SPAN = 136.0 FT (RULING SPAN = 199.0 FT)

| TEMP F | STRINGING SAG FT | STRINGING SAG IN | HORIZONTAL TENSION LB | FINAL SAG FT | FINAL SAG IN | HORIZONTAL TENSION LB |
|---|---|---|---|---|---|---|
| 0.0 | 0 | 7 | 3688.5 | 0 | 8 | 3237.1 |
| 10.0 | 0 | 8 | 3189.6 | 0 | 9 | 2730.3 |
| 30.0 | 0 | 10 | 2372.8 | 1 | 0 | 2016.8 |
| 40.0 | 1 | 0 | 2070.7 | 1 | 2 | 1780.3 |
| 50.0 | 1 | 2 | 1832.3 | 1 | 4 | 1598.5 |
| 60.0 | 1 | 3 | 1644.9 | 1 | 5 | 1456.0 |
| 70.0 | 1 | 5 | 1496.4 | 1 | 7 | 1341.9 |
| 80.0 | 1 | 6 | 1376.8 | 1 | 8 | 1248.7 |
| 90.0 | 1 | 7 | 1278.9 | 1 | 9 | 1171.2 |
| 100.0 | 1 | 9 | 1197.5 | 1 | 10 | 1105.5 |
| 110.0 | 1 | 10 | 1128.6 | 2 | 0 | 1049.2 |
| 120.0 | 1 | 11 | 1069.6 | 2 | 1 | 1000.3 |
| 130.0 | 2 | 0 | 1018.5 | 2 | 2 | 957.4 |
| 167.0 | 2 | 4 | 876.0 | 2 | 6 | 834.9 |
| 176.0 | 2 | 5 | 849.2 | 2 | 7 | 811.5 |
| 212.0 | 2 | 9 | 761.8 | 2 | 10 | 733.8 |

SPAN = 146.0 FT (RULING SPAN = 199.0 FT)

S- 6

| TEMP F | STRINGING SAG FT | STRINGING SAG IN | HORIZONTAL TENSION LB | FINAL SAG FT | FINAL SAG IN | HORIZONTAL TENSION LB |
|---|---|---|---|---|---|---|
| 0.0 | 0 | 8 | 3688.5 | 0 | 9 | 3237.1 |
| 10.0 | 0 | 9 | 3189.6 | 0 | 10 | 2730.3 |
| 30.0 | 1 | 0 | 2372.8 | 1 | 2 | 2016.8 |
| 40.0 | 1 | 2 | 2070.7 | 1 | 4 | 1780.3 |
| 50.0 | 1 | 4 | 1832.3 | 1 | 6 | 1598.5 |
| 60.0 | 1 | 5 | 1644.9 | 1 | 8 | 1456.0 |
| 70.0 | 1 | 7 | 1496.4 | 1 | 9 | 1341.9 |
| 80.0 | 1 | 9 | 1376.8 | 1 | 11 | 1248.7 |
| 90.0 | 1 | 10 | 1278.9 | 2 | 0 | 1171.2 |
| 100.0 | 2 | 0 | 1197.5 | 2 | 2 | 1105.5 |
| 110.0 | 2 | 1 | 1128.6 | 2 | 3 | 1049.2 |
| 120.0 | 2 | 3 | 1069.6 | 2 | 5 | 1000.3 |
| 130.0 | 2 | 4 | 1018.5 | 2 | 6 | 957.4 |
| 167.0 | 2 | 9 | 876.0 | 2 | 10 | 834.9 |
| 176.0 | 2 | 10 | 849.2 | 2 | 11 | 811.5 |
| 212.0 | 3 | 2 | 761.8 | 3 | 3 | 733.8 |

SPAN = 156.0 FT (RULING SPAN = 199.0 FT)

| TEMP F | STRINGING SAG FT | STRINGING SAG IN | HORIZONTAL TENSION LB | FINAL SAG FT | FINAL SAG IN | HORIZONTAL TENSION LB |
|---|---|---|---|---|---|---|
| 0.0 | 0 | 9 | 3688.5 | 0 | 10 | 3237.1 |
| 10.0 | 0 | 10 | 3189.6 | 1 | 0 | 2730.3 |
| 30.0 | 1 | 2 | 2372.8 | 1 | 4 | 2016.8 |
| 40.0 | 1 | 4 | 2070.7 | 1 | 6 | 1780.3 |
| 50.0 | 1 | 6 | 1832.3 | 1 | 8 | 1598.5 |
| 60.0 | 1 | 8 | 1644.9 | 1 | 10 | 1456.0 |
| 70.0 | 1 | 10 | 1496.4 | 2 | 0 | 1341.9 |
| 80.0 | 2 | 0 | 1376.8 | 2 | 2 | 1248.7 |
| 90.0 | 2 | 2 | 1278.9 | 2 | 4 | 1171.2 |
| 100.0 | 2 | 3 | 1197.5 | 2 | 6 | 1105.5 |
| 110.0 | 2 | 5 | 1128.6 | 2 | 7 | 1049.2 |
| 120.0 | 2 | 7 | 1069.6 | 2 | 9 | 1000.3 |
| 130.0 | 2 | 8 | 1018.5 | 2 | 10 | 957.4 |
| 167.0 | 3 | 1 | 876.0 | 3 | 3 | 834.9 |
| 176.0 | 3 | 3 | 849.2 | 3 | 4 | 811.5 |
| 212.0 | 3 | 7 | 761.8 | 3 | 9 | 733.8 |

SPAN = 166.0 FT (RULING SPAN = 199.0 FT)

S- 6

| TEMP F | STRINGING SAG FT | STRINGING SAG IN | HORIZONTAL TENSION LB | FINAL SAG FT | FINAL SAG IN | HORIZONTAL TENSION LB |
|---|---|---|---|---|---|---|
| 0.0 | 0 | 10 | 3688.5 | 0 | 11 | 3237.1 |
| 10.0 | 1 | 0 | 3189.6 | 1 | 2 | 2730.3 |
| 30.0 | 1 | 4 | 2372.8 | 1 | 6 | 2016.8 |
| 40.0 | 1 | 6 | 2070.7 | 1 | 9 | 1780.3 |
| 50.0 | 1 | 8 | 1832.3 | 1 | 11 | 1598.5 |
| 60.0 | 1 | 11 | 1644.9 | 2 | 1 | 1456.0 |
| 70.0 | 2 | 1 | 1496.4 | 2 | 4 | 1341.9 |
| 80.0 | 2 | 3 | 1376.8 | 2 | 6 | 1248.7 |
| 90.0 | 2 | 5 | 1278.9 | 2 | 8 | 1171.2 |
| 100.0 | 2 | 7 | 1197.5 | 2 | 10 | 1105.5 |
| 110.0 | 2 | 9 | 1128.6 | 2 | 11 | 1049.2 |
| 120.0 | 2 | 11 | 1069.6 | 3 | 1 | 1000.3 |
| 130.0 | 3 | 0 | 1018.5 | 3 | 3 | 957.4 |
| 167.0 | 3 | 6 | 876.0 | 3 | 8 | 834.9 |
| 176.0 | 3 | 8 | 849.2 | 3 | 10 | 811.5 |
| 212.0 | 4 | 1 | 761.8 | 4 | 3 | 733.8 |

SPAN = 176.0 FT (RULING SPAN = 199.0 FT)

| TEMP F | STRINGING SAG FT | STRINGING SAG IN | HORIZONTAL TENSION LB | FINAL SAG FT | FINAL SAG IN | HORIZONTAL TENSION LB |
|---|---|---|---|---|---|---|
| 0.0 | 0 | 11 | 3688.5 | 1 | 1 | 3237.1 |
| 10.0 | 1 | 1 | 3189.6 | 1 | 3 | 2730.3 |
| 30.0 | 1 | 6 | 2372.8 | 1 | 9 | 2016.8 |
| 40.0 | 1 | 8 | 2070.7 | 1 | 11 | 1780.3 |
| 50.0 | 1 | 11 | 1832.3 | 2 | 2 | 1598.5 |
| 60.0 | 2 | 1 | 1644.9 | 2 | 5 | 1456.0 |
| 70.0 | 2 | 4 | 1496.4 | 2 | 7 | 1341.9 |
| 80.0 | 2 | 6 | 1376.8 | 2 | 9 | 1248.7 |
| 90.0 | 2 | 9 | 1278.9 | 3 | 0 | 1171.2 |
| 100.0 | 2 | 11 | 1197.5 | 3 | 2 | 1105.5 |
| 110.0 | 3 | 1 | 1128.6 | 3 | 4 | 1049.2 |
| 120.0 | 3 | 3 | 1069.6 | 3 | 6 | 1000.3 |
| 130.0 | 3 | 5 | 1018.5 | 3 | 8 | 957.4 |
| 167.0 | 4 | 0 | 876.0 | 4 | 2 | 834.9 |
| 176.0 | 4 | 1 | 849.2 | 4 | 3 | 811.5 |
| 212.0 | 4 | 7 | 761.8 | 4 | 9 | 733.8 |

SPAN = 186.0 FT (RULING SPAN = 199.0 FT)

S- 6

| TEMP F | STRINGING SAG FT | STRINGING SAG IN | HORIZONTAL TENSION LB | FINAL SAG FT | FINAL SAG IN | HORIZONTAL TENSION LB |
|---|---|---|---|---|---|---|
| 0.0 | 1 | 1 | 3688.5 | 1 | 2 | 3237.1 |
| 10.0 | 1 | 3 | 3189.6 | 1 | 5 | 2730.3 |
| 30.0 | 1 | 8 | 2372.8 | 1 | 11 | 2016.8 |
| 40.0 | 1 | 10 | 2070.7 | 2 | 2 | 1780.3 |
| 50.0 | 2 | 1 | 1832.3 | 2 | 5 | 1598.5 |
| 60.0 | 2 | 4 | 1644.9 | 2 | 8 | 1456.0 |
| 70.0 | 2 | 7 | 1496.4 | 2 | 11 | 1341.9 |
| 80.0 | 2 | 10 | 1376.8 | 3 | 1 | 1248.7 |
| 90.0 | 3 | 0 | 1278.9 | 3 | 4 | 1171.2 |
| 100.0 | 3 | 3 | 1197.5 | 3 | 6 | 1105.5 |
| 110.0 | 3 | 5 | 1128.6 | 3 | 8 | 1049.2 |
| 120.0 | 3 | 7 | 1069.6 | 3 | 10 | 1000.3 |
| 130.0 | 3 | 10 | 1018.5 | 4 | 1 | 957.4 |
| 167.0 | 4 | 5 | 876.0 | 4 | 8 | 834.9 |
| 176.0 | 4 | 7 | 849.2 | 4 | 9 | 811.5 |
| 212.0 | 5 | 1 | 761.8 | 5 | 3 | 733.8 |

SPAN = 196.0 FT (RULING SPAN = 199.0 FT)

| TEMP F | STRINGING SAG FT | STRINGING SAG IN | HORIZONTAL TENSION LB | FINAL SAG FT | FINAL SAG IN | HORIZONTAL TENSION LB |
|---|---|---|---|---|---|---|
| 0.0 | 1 | 2 | 3688.5 | 1 | 4 | 3237.1 |
| 10.0 | 1 | 4 | 3189.6 | 1 | 7 | 2730.3 |
| 30.0 | 1 | 10 | 2372.8 | 2 | 2 | 2016.8 |
| 40.0 | 2 | 1 | 2070.7 | 2 | 5 | 1780.3 |
| 50.0 | 2 | 4 | 1832.3 | 2 | 8 | 1598.5 |
| 60.0 | 2 | 7 | 1644.9 | 2 | 11 | 1456.0 |
| 70.0 | 2 | 11 | 1496.4 | 3 | 2 | 1341.9 |
| 80.0 | 3 | 2 | 1376.8 | 3 | 5 | 1248.7 |
| 90.0 | 3 | 4 | 1278.9 | 3 | 8 | 1171.2 |
| 100.0 | 3 | 7 | 1197.5 | 3 | 11 | 1105.5 |
| 110.0 | 3 | 10 | 1128.6 | 4 | 1 | 1049.2 |
| 120.0 | 4 | 0 | 1069.6 | 4 | 4 | 1000.3 |
| 130.0 | 4 | 3 | 1018.5 | 4 | 6 | 957.4 |
| 167.0 | 4 | 11 | 876.0 | 5 | 2 | 834.9 |
| 176.0 | 5 | 1 | 849.2 | 5 | 4 | 811.5 |
| 212.0 | 5 | 8 | 761.8 | 5 | 10 | 733.8 |

SPAN = 206.0 FT (RULING SPAN = 199.0 FT)

S- 6

| TEMP F | STRINGING SAG FT | STRINGING SAG IN | HORIZONTAL TENSION LB | FINAL SAG FT | FINAL SAG IN | HORIZONTAL TENSION LB |
|---|---|---|---|---|---|---|
| 0.0 | 1 | 3 | 3688.5 | 1 | 6 | 3237.1 |
| 10.0 | 1 | 6 | 3189.6 | 1 | 9 | 2730.3 |
| 30.0 | 2 | 0 | 2372.8 | 2 | 4 | 2016.8 |
| 40.0 | 2 | 4 | 2070.7 | 2 | 8 | 1780.3 |
| 50.0 | 2 | 7 | 1832.3 | 3 | 0 | 1598.5 |
| 60.0 | 2 | 11 | 1644.9 | 3 | 3 | 1456.0 |
| 70.0 | 3 | 2 | 1496.4 | 3 | 7 | 1341.9 |
| 80.0 | 3 | 5 | 1376.8 | 3 | 10 | 1248.7 |
| 90.0 | 3 | 9 | 1278.9 | 4 | 1 | 1171.2 |
| 100.0 | 4 | 0 | 1197.5 | 4 | 4 | 1105.5 |
| 110.0 | 4 | 3 | 1128.6 | 4 | 6 | 1049.2 |
| 120.0 | 4 | 5 | 1069.6 | 4 | 9 | 1000.3 |
| 130.0 | 4 | 8 | 1018.5 | 5 | 0 | 957.4 |
| 167.0 | 5 | 5 | 876.0 | 5 | 8 | 834.9 |
| 176.0 | 5 | 7 | 849.2 | 5 | 10 | 811.5 |
| 212.0 | 6 | 3 | 761.8 | 6 | 6 | 733.8 |

SPAN = 216.0 FT (RULING SPAN = 199.0 FT)

| TEMP F | STRINGING SAG FT | STRINGING SAG IN | HORIZONTAL TENSION LB | FINAL SAG FT | FINAL SAG IN | HORIZONTAL TENSION LB |
|---|---|---|---|---|---|---|
| 0.0 | 1 | 5 | 3688.5 | 1 | 7 | 3237.1 |
| 10.0 | 1 | 8 | 3189.6 | 1 | 11 | 2730.3 |
| 30.0 | 2 | 2 | 2372.8 | 2 | 7 | 2016.8 |
| 40.0 | 2 | 6 | 2070.7 | 2 | 11 | 1780.3 |
| 50.0 | 2 | 10 | 1832.3 | 3 | 3 | 1598.5 |
| 60.0 | 3 | 2 | 1644.9 | 3 | 7 | 1456.0 |
| 70.0 | 3 | 6 | 1496.4 | 3 | 11 | 1341.9 |
| 80.0 | 3 | 10 | 1376.8 | 4 | 2 | 1248.7 |
| 90.0 | 4 | 1 | 1278.9 | 4 | 6 | 1171.2 |
| 100.0 | 4 | 4 | 1197.5 | 4 | 9 | 1105.5 |
| 110.0 | 4 | 8 | 1128.6 | 5 | 0 | 1049.2 |
| 120.0 | 4 | 11 | 1069.6 | 5 | 3 | 1000.3 |
| 130.0 | 5 | 2 | 1018.5 | 5 | 6 | 957.4 |
| 167.0 | 6 | 0 | 876.0 | 6 | 3 | 834.9 |
| 176.0 | 6 | 2 | 849.2 | 6 | 5 | 811.5 |
| 212.0 | 6 | 10 | 761.8 | 7 | 2 | 733.8 |

SPAN = 226.0 FT (RULING SPAN = 199.0 FT)

S- 6

| TEMP F | STRINGING SAG FT | STRINGING SAG IN | HORIZONTAL TENSION LB | FINAL SAG FT | FINAL SAG IN | HORIZONTAL TENSION LB |
|---|---|---|---|---|---|---|
| 0.0 | 1 | 7 | 3688.5 | 1 | 9 | 3237.1 |
| 10.0 | 1 | 10 | 3189.6 | 2 | 1 | 2730.3 |
| 30.0 | 2 | 5 | 2372.8 | 2 | 10 | 2016.8 |
| 40.0 | 2 | 9 | 2070.7 | 3 | 3 | 1780.3 |
| 50.0 | 3 | 1 | 1832.3 | 3 | 7 | 1598.5 |
| 60.0 | 3 | 6 | 1644.9 | 3 | 11 | 1456.0 |
| 70.0 | 3 | 10 | 1496.4 | 4 | 3 | 1341.9 |
| 80.0 | 4 | 2 | 1376.8 | 4 | 7 | 1248.7 |
| 90.0 | 4 | 6 | 1278.9 | 4 | 11 | 1171.2 |
| 100.0 | 4 | 9 | 1197.5 | 5 | 2 | 1105.5 |
| 110.0 | 5 | 1 | 1128.6 | 5 | 5 | 1049.2 |
| 120.0 | 5 | 4 | 1069.6 | 5 | 9 | 1000.3 |
| 130.0 | 5 | 7 | 1018.5 | 6 | 0 | 957.4 |
| 167.0 | 6 | 6 | 876.0 | 6 | 10 | 834.9 |
| 176.0 | 6 | 9 | 849.2 | 7 | 1 | 811.5 |
| 212.0 | 7 | 6 | 761.8 | 7 | 10 | 733.8 |

SPAN = 236.0 FT (RULING SPAN = 199.0 FT)

| TEMP F | STRINGING SAG FT | STRINGING SAG IN | HORIZONTAL TENSION LB | FINAL SAG FT | FINAL SAG IN | HORIZONTAL TENSION LB |
|---|---|---|---|---|---|---|
| 0.0 | 1 | 8 | 3688.5 | 1 | 11 | 3237.1 |
| 10.0 | 1 | 11 | 3189.6 | 2 | 3 | 2730.3 |
| 30.0 | 2 | 8 | 2372.8 | 3 | 1 | 2016.8 |
| 40.0 | 3 | 0 | 2070.7 | 3 | 6 | 1780.3 |
| 50.0 | 3 | 5 | 1832.3 | 3 | 11 | 1598.5 |
| 60.0 | 3 | 10 | 1644.9 | 4 | 3 | 1456.0 |
| 70.0 | 4 | 2 | 1496.4 | 4 | 8 | 1341.9 |
| 80.0 | 4 | 6 | 1376.8 | 5 | 0 | 1248.7 |
| 90.0 | 4 | 11 | 1278.9 | 5 | 4 | 1171.2 |
| 100.0 | 5 | 3 | 1197.5 | 5 | 8 | 1105.5 |
| 110.0 | 5 | 6 | 1128.6 | 5 | 11 | 1049.2 |
| 120.0 | 5 | 10 | 1069.6 | 6 | 3 | 1000.3 |
| 130.0 | 6 | 2 | 1018.5 | 6 | 6 | 957.4 |
| 167.0 | 7 | 2 | 876.0 | 7 | 6 | 834.9 |
| 176.0 | 7 | 4 | 849.2 | 7 | 8 | 811.5 |
| 212.0 | 8 | 2 | 761.8 | 8 | 6 | 733.8 |

SPAN = 246.0 FT (RULING SPAN = 199.0 FT)

S- 6

| TEMP F | STRINGING SAG FT | STRINGING SAG IN | HORIZONTAL TENSION LB | FINAL SAG FT | FINAL SAG IN | HORIZONTAL TENSION LB |
|---|---|---|---|---|---|---|
| 0.0 | 1 | 10 | 3688.5 | 2 | 1 | 3237.1 |
| 10.0 | 2 | 1 | 3189.6 | 2 | 6 | 2730.3 |
| 30.0 | 2 | 10 | 2372.8 | 3 | 4 | 2016.8 |
| 40.0 | 3 | 3 | 2070.7 | 3 | 10 | 1780.3 |
| 50.0 | 3 | 8 | 1832.3 | 4 | 3 | 1598.5 |
| 60.0 | 4 | 1 | 1644.9 | 4 | 8 | 1456.0 |
| 70.0 | 4 | 6 | 1496.4 | 5 | 1 | 1341.9 |
| 80.0 | 4 | 11 | 1376.8 | 5 | 5 | 1248.7 |
| 90.0 | 5 | 4 | 1278.9 | 5 | 9 | 1171.2 |
| 100.0 | 5 | 8 | 1197.5 | 6 | 2 | 1105.5 |
| 110.0 | 6 | 0 | 1128.6 | 6 | 6 | 1049.2 |
| 120.0 | 6 | 4 | 1069.6 | 6 | 9 | 1000.3 |
| 130.0 | 6 | 8 | 1018.5 | 7 | 1 | 957.4 |
| 167.0 | 7 | 9 | 876.0 | 8 | 2 | 834.9 |
| 176.0 | 8 | 0 | 849.2 | 8 | 4 | 811.5 |
| 212.0 | 8 | 11 | 761.8 | 9 | 3 | 733.8 |

SPAN = 256.0 FT (RULING SPAN = 199.0 FT)

| TEMP F | STRINGING SAG FT | STRINGING SAG IN | HORIZONTAL TENSION LB | FINAL SAG FT | FINAL SAG IN | HORIZONTAL TENSION LB |
|---|---|---|---|---|---|---|
| 0.0 | 2 | 0 | 3688.5 | 2 | 3 | 3237.1 |
| 10.0 | 2 | 4 | 3189.6 | 2 | 8 | 2730.3 |
| 30.0 | 3 | 1 | 2372.8 | 3 | 8 | 2016.8 |
| 40.0 | 3 | 7 | 2070.7 | 4 | 1 | 1780.3 |
| 50.0 | 4 | 0 | 1832.3 | 4 | 7 | 1598.5 |
| 60.0 | 4 | 6 | 1644.9 | 5 | 1 | 1456.0 |
| 70.0 | 4 | 11 | 1496.4 | 5 | 6 | 1341.9 |
| 80.0 | 5 | 4 | 1376.8 | 5 | 11 | 1248.7 |
| 90.0 | 5 | 9 | 1278.9 | 6 | 3 | 1171.2 |
| 100.0 | 6 | 2 | 1197.5 | 6 | 8 | 1105.5 |
| 110.0 | 6 | 6 | 1128.6 | 7 | 0 | 1049.2 |
| 120.0 | 6 | 10 | 1069.6 | 7 | 4 | 1000.3 |
| 130.0 | 7 | 3 | 1018.5 | 7 | 8 | 957.4 |
| 167.0 | 8 | 5 | 876.0 | 8 | 10 | 834.9 |
| 176.0 | 8 | 8 | 849.2 | 9 | 1 | 811.5 |
| 212.0 | 9 | 8 | 761.8 | 10 | 0 | 733.8 |

SPAN = 266.0 FT (RULING SPAN = 199.0 FT)

S- 6

| TEMP F | STRINGING SAG FT | STRINGING SAG IN | HORIZONTAL TENSION LB | FINAL SAG FT | FINAL SAG IN | HORIZONTAL TENSION LB |
|---|---|---|---|---|---|---|
| 0.0 | 2 | 2 | 3688.5 | 2 | 5 | 3237.1 |
| 10.0 | 2 | 6 | 3189.6 | 2 | 11 | 2730.3 |
| 30.0 | 3 | 4 | 2372.8 | 3 | 11 | 2016.8 |
| 40.0 | 3 | 10 | 2070.7 | 4 | 5 | 1780.3 |
| 50.0 | 4 | 4 | 1832.3 | 5 | 0 | 1598.5 |
| 60.0 | 4 | 10 | 1644.9 | 5 | 5 | 1456.0 |
| 70.0 | 5 | 4 | 1496.4 | 5 | 11 | 1341.9 |
| 80.0 | 5 | 9 | 1376.8 | 6 | 4 | 1248.7 |
| 90.0 | 6 | 2 | 1278.9 | 6 | 9 | 1171.2 |
| 100.0 | 6 | 7 | 1197.5 | 7 | 2 | 1105.5 |
| 110.0 | 7 | 0 | 1128.6 | 7 | 7 | 1049.2 |
| 120.0 | 7 | 5 | 1069.6 | 7 | 11 | 1000.3 |
| 130.0 | 7 | 9 | 1018.5 | 8 | 3 | 957.4 |
| 167.0 | 9 | 1 | 876.0 | 9 | 6 | 834.9 |
| 176.0 | 9 | 4 | 849.2 | 9 | 9 | 811.5 |
| 212.0 | 10 | 5 | 761.8 | 10 | 10 | 733.8 |

SPAN = 276.0 FT (RULING SPAN = 199.0 FT)

| TEMP F | STRINGING SAG FT | STRINGING SAG IN | HORIZONTAL TENSION LB | FINAL SAG FT | FINAL SAG IN | HORIZONTAL TENSION LB |
|---|---|---|---|---|---|---|
| 0.0 | 2 | 4 | 3688.5 | 2 | 8 | 3237.1 |
| 10.0 | 2 | 8 | 3189.6 | 3 | 1 | 2730.3 |
| 30.0 | 3 | 7 | 2372.8 | 4 | 3 | 2016.8 |
| 40.0 | 4 | 1 | 2070.7 | 4 | 10 | 1780.3 |
| 50.0 | 4 | 8 | 1832.3 | 5 | 4 | 1598.5 |
| 60.0 | 5 | 2 | 1644.9 | 5 | 10 | 1456.0 |
| 70.0 | 5 | 8 | 1496.4 | 6 | 4 | 1341.9 |
| 80.0 | 6 | 2 | 1376.8 | 6 | 10 | 1248.7 |
| 90.0 | 6 | 8 | 1278.9 | 7 | 3 | 1171.2 |
| 100.0 | 7 | 2 | 1197.5 | 7 | 9 | 1105.5 |
| 110.0 | 7 | 7 | 1128.6 | 8 | 2 | 1049.2 |
| 120.0 | 8 | 0 | 1069.6 | 8 | 6 | 1000.3 |
| 130.0 | 8 | 5 | 1018.5 | 8 | 11 | 957.4 |
| 167.0 | 9 | 9 | 876.0 | 10 | 3 | 834.9 |
| 176.0 | 10 | 1 | 849.2 | 10 | 6 | 811.5 |
| 212.0 | 11 | 3 | 761.8 | 11 | 8 | 733.8 |

SOUTHWIRE COMPANY
CARROLLTON, GEORGIA

STRINGING TABLE
(CATENARY METHOD)

CHART NO: S- 7
FILE NO: 40058
DATE: 08/21/06

RULING SPAN = 200.0 FT

LOADING DISTRICT: LIGHT

CONDUCTOR: 954 KCM - 37 STR. AAC "MAGNOLIA"

NOTE: FOR STRINGING CALCULATIONS, THE HORIZONTAL TENSION OF THE RULING SPAN IS HELD CONSTANT (FOR EACH PARTICULAR TEMPERATURE) IN ORDER TO CALCULATE STRINGING SAGS FOR THE OTHER SPANS. THE FINAL DATA IS TO BE USED FOR PRE-STRESSED CABLE ONLY.

SPAN = 170.0 FT

(RULING SPAN = 200.0 FT)

| TEMP | STRINGING SAG | | HORIZONTAL TENSION | FINAL SAG | | HORIZONTAL TENSION |
|---|---|---|---|---|---|---|
| F | FT | IN | LB | FT | IN | LB |
| 0.0 | 0 | 11 | 3681.7 | 1 | 0 | 3228.7 |
| 10.0 | 1 | 0 | 3184.4 | 1 | 2 | 2725.4 |
| 30.0 | 1 | 4 | 2371.9 | 1 | 7 | 2016.9 |
| 40.0 | 1 | 7 | 2071.6 | 1 | 10 | 1781.9 |
| 50.0 | 1 | 9 | 1834.4 | 2 | 0 | 1601.0 |
| 60.0 | 2 | 0 | 1647.8 | 2 | 3 | 1459.0 |
| 70.0 | 2 | 2 | 1499.7 | 2 | 5 | 1345.2 |
| 80.0 | 2 | 4 | 1380.4 | 2 | 7 | 1252.3 |
| 90.0 | 2 | 6 | 1282.7 | 2 | 9 | 1174.8 |
| 100.0 | 2 | 8 | 1201.3 | 2 | 11 | 1109.2 |
| 110.0 | 2 | 10 | 1132.4 | 3 | 1 | 1052.9 |
| 120.0 | 3 | 0 | 1073.4 | 3 | 3 | 1003.9 |
| 130.0 | 3 | 2 | 1022.2 | 3 | 4 | 960.9 |
| 167.0 | 3 | 8 | 879.6 | 3 | 10 | 838.3 |
| 176.0 | 3 | 10 | 852.7 | 4 | 0 | 814.8 |
| 212.0 | 4 | 3 | 765.1 | 4 | 5 | 736.9 |

SPAN = 180.0 FT (RULING SPAN = 200.0 FT)

S- 7

| TEMP F | STRINGING SAG FT | STRINGING SAG IN | HORIZONTAL TENSION LB | FINAL SAG FT | FINAL SAG IN | HORIZONTAL TENSION LB |
|---|---|---|---|---|---|---|
| 0.0 | 1 | 0 | 3681.7 | 1 | 1 | 3228.7 |
| 10.0 | 1 | 2 | 3184.4 | 1 | 4 | 2725.4 |
| 30.0 | 1 | 6 | 2371.9 | 1 | 10 | 2016.9 |
| 40.0 | 1 | 9 | 2071.6 | 2 | 0 | 1781.9 |
| 50.0 | 2 | 0 | 1834.4 | 2 | 3 | 1601.0 |
| 60.0 | 2 | 2 | 1647.8 | 2 | 6 | 1459.0 |
| 70.0 | 2 | 5 | 1499.7 | 2 | 8 | 1345.2 |
| 80.0 | 2 | 8 | 1380.4 | 2 | 11 | 1252.3 |
| 90.0 | 2 | 10 | 1282.7 | 3 | 1 | 1174.8 |
| 100.0 | 3 | 0 | 1201.3 | 3 | 3 | 1109.2 |
| 110.0 | 3 | 2 | 1132.4 | 3 | 5 | 1052.9 |
| 120.0 | 3 | 5 | 1073.4 | 3 | 7 | 1003.9 |
| 130.0 | 3 | 7 | 1022.2 | 3 | 9 | 960.9 |
| 167.0 | 4 | 2 | 879.6 | 4 | 4 | 838.3 |
| 176.0 | 4 | 3 | 852.7 | 4 | 5 | 814.8 |
| 212.0 | 4 | 9 | 765.1 | 4 | 11 | 736.9 |

SPAN = 190.0 FT (RULING SPAN = 200.0 FT)

| TEMP F | STRINGING SAG FT | STRINGING SAG IN | HORIZONTAL TENSION LB | FINAL SAG FT | FINAL SAG IN | HORIZONTAL TENSION LB |
|---|---|---|---|---|---|---|
| 0.0 | 1 | 1 | 3681.7 | 1 | 3 | 3228.7 |
| 10.0 | 1 | 3 | 3184.4 | 1 | 6 | 2725.4 |
| 30.0 | 1 | 8 | 2371.9 | 2 | 0 | 2016.9 |
| 40.0 | 1 | 11 | 2071.6 | 2 | 3 | 1781.9 |
| 50.0 | 2 | 2 | 1834.4 | 2 | 6 | 1601.0 |
| 60.0 | 2 | 5 | 1647.8 | 2 | 9 | 1459.0 |
| 70.0 | 2 | 8 | 1499.7 | 3 | 0 | 1345.2 |
| 80.0 | 2 | 11 | 1380.4 | 3 | 3 | 1252.3 |
| 90.0 | 3 | 2 | 1282.7 | 3 | 5 | 1174.8 |
| 100.0 | 3 | 4 | 1201.3 | 3 | 8 | 1109.2 |
| 110.0 | 3 | 7 | 1132.4 | 3 | 10 | 1052.9 |
| 120.0 | 3 | 9 | 1073.4 | 4 | 0 | 1003.9 |
| 130.0 | 3 | 11 | 1022.2 | 4 | 3 | 960.9 |
| 167.0 | 4 | 7 | 879.6 | 4 | 10 | 838.3 |
| 176.0 | 4 | 9 | 852.7 | 5 | 0 | 814.8 |
| 212.0 | 5 | 3 | 765.1 | 5 | 6 | 736.9 |

SPAN = 200.0 FT (RULING SPAN = 200.0 FT)

S- 7

| TEMP F | STRINGING SAG FT | STRINGING SAG IN | HORIZONTAL TENSION LB | FINAL SAG FT | FINAL SAG IN | HORIZONTAL TENSION LB |
|---|---|---|---|---|---|---|
| 0.0 | 1 | 3 | 3681.7 | 1 | 5 | 3228.7 |
| 10.0 | 1 | 5 | 3184.4 | 1 | 8 | 2725.4 |
| 30.0 | 1 | 11 | 2371.9 | 2 | 3 | 2016.9 |
| 40.0 | 2 | 2 | 2071.6 | 2 | 6 | 1781.9 |
| 50.0 | 2 | 5 | 1834.4 | 2 | 10 | 1601.0 |
| 60.0 | 2 | 9 | 1647.8 | 3 | 1 | 1459.0 |
| 70.0 | 3 | 0 | 1499.7 | 3 | 4 | 1345.2 |
| 80.0 | 3 | 3 | 1380.4 | 3 | 7 | 1252.3 |
| 90.0 | 3 | 6 | 1282.7 | 3 | 10 | 1174.8 |
| 100.0 | 3 | 9 | 1201.3 | 4 | 0 | 1109.2 |
| 110.0 | 3 | 11 | 1132.4 | 4 | 3 | 1052.9 |
| 120.0 | 4 | 2 | 1073.4 | 4 | 6 | 1003.9 |
| 130.0 | 4 | 5 | 1022.2 | 4 | 8 | 960.9 |
| 167.0 | 5 | 1 | 879.6 | 5 | 4 | 838.3 |
| 176.0 | 5 | 3 | 852.7 | 5 | 6 | 814.8 |
| 212.0 | 5 | 10 | 765.1 | 6 | 1 | 736.9 |

SPAN = 210.0 FT (RULING SPAN = 200.0 FT)

| TEMP F | STRINGING SAG FT | STRINGING SAG IN | HORIZONTAL TENSION LB | FINAL SAG FT | FINAL SAG IN | HORIZONTAL TENSION LB |
|---|---|---|---|---|---|---|
| 0.0 | 1 | 4 | 3681.7 | 1 | 6 | 3228.7 |
| 10.0 | 1 | 7 | 3184.4 | 1 | 10 | 2725.4 |
| 30.0 | 2 | 1 | 2371.9 | 2 | 5 | 2016.9 |
| 40.0 | 2 | 5 | 2071.6 | 2 | 9 | 1781.9 |
| 50.0 | 2 | 8 | 1834.4 | 3 | 1 | 1601.0 |
| 60.0 | 3 | 0 | 1647.8 | 3 | 5 | 1459.0 |
| 70.0 | 3 | 4 | 1499.7 | 3 | 8 | 1345.2 |
| 80.0 | 3 | 7 | 1380.4 | 3 | 11 | 1252.3 |
| 90.0 | 3 | 10 | 1282.7 | 4 | 2 | 1174.8 |
| 100.0 | 4 | 1 | 1201.3 | 4 | 5 | 1109.2 |
| 110.0 | 4 | 4 | 1132.4 | 4 | 8 | 1052.9 |
| 120.0 | 4 | 7 | 1073.4 | 4 | 11 | 1003.9 |
| 130.0 | 4 | 10 | 1022.2 | 5 | 2 | 960.9 |
| 167.0 | 5 | 7 | 879.6 | 5 | 11 | 838.3 |
| 176.0 | 5 | 10 | 852.7 | 6 | 1 | 814.8 |
| 212.0 | 6 | 6 | 765.1 | 6 | 9 | 736.9 |

SPAN = 220.0 FT (RULING SPAN = 200.0 FT)

S- 7

| TEMP F | STRINGING SAG FT | STRINGING SAG IN | HORIZONTAL TENSION LB | FINAL SAG FT | FINAL SAG IN | HORIZONTAL TENSION LB |
|---|---|---|---|---|---|---|
| 0.0 | 1 | 6 | 3681.7 | 1 | 8 | 3228.7 |
| 10.0 | 1 | 8 | 3184.4 | 2 | 0 | 2725.4 |
| 30.0 | 2 | 3 | 2371.9 | 2 | 8 | 2016.9 |
| 40.0 | 2 | 7 | 2071.6 | 3 | 1 | 1781.9 |
| 50.0 | 2 | 11 | 1834.4 | 3 | 5 | 1601.0 |
| 60.0 | 3 | 3 | 1647.8 | 3 | 9 | 1459.0 |
| 70.0 | 3 | 7 | 1499.7 | 4 | 0 | 1345.2 |
| 80.0 | 3 | 11 | 1380.4 | 4 | 4 | 1252.3 |
| 90.0 | 4 | 3 | 1282.7 | 4 | 7 | 1174.8 |
| 100.0 | 4 | 6 | 1201.3 | 4 | 11 | 1109.2 |
| 110.0 | 4 | 9 | 1132.4 | 5 | 2 | 1052.9 |
| 120.0 | 5 | 1 | 1073.4 | 5 | 5 | 1003.9 |
| 130.0 | 5 | 4 | 1022.2 | 5 | 8 | 960.9 |
| 167.0 | 6 | 2 | 879.6 | 6 | 6 | 838.3 |
| 176.0 | 6 | 4 | 852.7 | 6 | 8 | 814.8 |
| 212.0 | 7 | 1 | 765.1 | 7 | 4 | 736.9 |

SOUTHWIRE COMPANY
CARROLLTON, GEORGIA

STRINGING TABLE
(CATENARY METHOD)

CHART NO: S- 8
FILE NO: 40058
DATE: 08/21/06

RULING SPAN = 203.0 FT

LOADING DISTRICT: LIGHT

CONDUCTOR: 954 KCM - 37 STR. AAC "MAGNOLIA"

NOTE: FOR STRINGING CALCULATIONS, THE HORIZONTAL TENSION OF THE RULING SPAN IS HELD CONSTANT (FOR EACH PARTICULAR TEMPERATURE) IN ORDER TO CALCULATE STRINGING SAGS FOR THE OTHER SPANS. THE FINAL DATA IS TO BE USED FOR PRE-STRESSED CABLE ONLY.

SPAN = 180.0 FT

(RULING SPAN = 203.0 FT)

| TEMP | STRINGING SAG | | HORIZONTAL TENSION | FINAL SAG | | HORIZONTAL TENSION |
|---|---|---|---|---|---|---|
| F | FT | IN | LB | FT | IN | LB |
| 0.0 | 1 | 0 | 3660.8 | 1 | 2 | 3204.0 |
| 10.0 | 1 | 2 | 3169.2 | 1 | 4 | 2710.6 |
| 30.0 | 1 | 6 | 2369.3 | 1 | 10 | 2017.4 |
| 40.0 | 1 | 9 | 2074.1 | 2 | 0 | 1786.7 |
| 50.0 | 2 | 0 | 1840.6 | 2 | 3 | 1608.4 |
| 60.0 | 2 | 2 | 1656.3 | 2 | 6 | 1468.0 |
| 70.0 | 2 | 5 | 1509.7 | 2 | 8 | 1355.2 |
| 80.0 | 2 | 7 | 1391.2 | 2 | 10 | 1262.7 |
| 90.0 | 2 | 10 | 1293.9 | 3 | 1 | 1185.5 |
| 100.0 | 3 | 0 | 1212.7 | 3 | 3 | 1120.0 |
| 110.0 | 3 | 2 | 1143.9 | 3 | 5 | 1063.7 |
| 120.0 | 3 | 4 | 1084.8 | 3 | 7 | 1014.6 |
| 130.0 | 3 | 6 | 1033.5 | 3 | 9 | 971.5 |
| 167.0 | 4 | 1 | 890.2 | 4 | 3 | 848.4 |
| 176.0 | 4 | 2 | 863.2 | 4 | 5 | 824.7 |
| 212.0 | 4 | 8 | 774.9 | 4 | 10 | 746.3 |

SPAN = 190.0 FT (RULING SPAN = 203.0 FT)

S- 8

| TEMP F | STRINGING SAG FT | STRINGING SAG IN | HORIZONTAL TENSION LB | FINAL SAG FT | FINAL SAG IN | HORIZONTAL TENSION LB |
|---|---|---|---|---|---|---|
| 0.0 | 1 | 1 | 3660.8 | 1 | 3 | 3204.0 |
| 10.0 | 1 | 3 | 3169.2 | 1 | 6 | 2710.6 |
| 30.0 | 1 | 8 | 2369.3 | 2 | 0 | 2017.4 |
| 40.0 | 1 | 11 | 2074.1 | 2 | 3 | 1786.7 |
| 50.0 | 2 | 2 | 1840.6 | 2 | 6 | 1608.4 |
| 60.0 | 2 | 5 | 1656.3 | 2 | 9 | 1468.0 |
| 70.0 | 2 | 8 | 1509.7 | 3 | 0 | 1355.2 |
| 80.0 | 2 | 11 | 1391.2 | 3 | 2 | 1262.7 |
| 90.0 | 3 | 2 | 1293.9 | 3 | 5 | 1185.5 |
| 100.0 | 3 | 4 | 1212.7 | 3 | 7 | 1120.0 |
| 110.0 | 3 | 6 | 1143.9 | 3 | 10 | 1063.7 |
| 120.0 | 3 | 9 | 1084.8 | 4 | 0 | 1014.6 |
| 130.0 | 3 | 11 | 1033.5 | 4 | 2 | 971.5 |
| 167.0 | 4 | 7 | 890.2 | 4 | 9 | 848.4 |
| 176.0 | 4 | 8 | 863.2 | 4 | 11 | 824.7 |
| 212.0 | 5 | 3 | 774.9 | 5 | 5 | 746.3 |

SPAN = 200.0 FT (RULING SPAN = 203.0 FT)

| TEMP F | STRINGING SAG FT | STRINGING SAG IN | HORIZONTAL TENSION LB | FINAL SAG FT | FINAL SAG IN | HORIZONTAL TENSION LB |
|---|---|---|---|---|---|---|
| 0.0 | 1 | 3 | 3660.8 | 1 | 5 | 3204.0 |
| 10.0 | 1 | 5 | 3169.2 | 1 | 8 | 2710.6 |
| 30.0 | 1 | 11 | 2369.3 | 2 | 3 | 2017.4 |
| 40.0 | 2 | 2 | 2074.1 | 2 | 6 | 1786.7 |
| 50.0 | 2 | 5 | 1840.6 | 2 | 9 | 1608.4 |
| 60.0 | 2 | 8 | 1656.3 | 3 | 1 | 1468.0 |
| 70.0 | 3 | 0 | 1509.7 | 3 | 4 | 1355.2 |
| 80.0 | 3 | 3 | 1391.2 | 3 | 7 | 1262.7 |
| 90.0 | 3 | 6 | 1293.9 | 3 | 9 | 1185.5 |
| 100.0 | 3 | 8 | 1212.7 | 4 | 0 | 1120.0 |
| 110.0 | 3 | 11 | 1143.9 | 4 | 3 | 1063.7 |
| 120.0 | 4 | 2 | 1084.8 | 4 | 5 | 1014.6 |
| 130.0 | 4 | 4 | 1033.5 | 4 | 7 | 971.5 |
| 167.0 | 5 | 0 | 890.2 | 5 | 3 | 848.4 |
| 176.0 | 5 | 2 | 863.2 | 5 | 5 | 824.7 |
| 212.0 | 5 | 9 | 774.9 | 6 | 0 | 746.3 |

SPAN = 210.0 FT (RULING SPAN = 203.0 FT)

S- 8

| TEMP F | STRINGING SAG FT | STRINGING SAG IN | HORIZONTAL TENSION LB | FINAL SAG FT | FINAL SAG IN | HORIZONTAL TENSION LB |
|---|---|---|---|---|---|---|
| 0.0 | 1 | 4 | 3660.8 | 1 | 6 | 3204.0 |
| 10.0 | 1 | 7 | 3169.2 | 1 | 10 | 2710.6 |
| 30.0 | 2 | 1 | 2369.3 | 2 | 5 | 2017.4 |
| 40.0 | 2 | 5 | 2074.1 | 2 | 9 | 1786.7 |
| 50.0 | 2 | 8 | 1840.6 | 3 | 1 | 1608.4 |
| 60.0 | 3 | 0 | 1656.3 | 3 | 4 | 1468.0 |
| 70.0 | 3 | 3 | 1509.7 | 3 | 8 | 1355.2 |
| 80.0 | 3 | 7 | 1391.2 | 3 | 11 | 1262.7 |
| 90.0 | 3 | 10 | 1293.9 | 4 | 2 | 1185.5 |
| 100.0 | 4 | 1 | 1212.7 | 4 | 5 | 1120.0 |
| 110.0 | 4 | 4 | 1143.9 | 4 | 8 | 1063.7 |
| 120.0 | 4 | 7 | 1084.8 | 4 | 10 | 1014.6 |
| 130.0 | 4 | 9 | 1033.5 | 5 | 1 | 971.5 |
| 167.0 | 5 | 7 | 890.2 | 5 | 10 | 848.4 |
| 176.0 | 5 | 9 | 863.2 | 6 | 0 | 824.7 |
| 212.0 | 6 | 5 | 774.9 | 6 | 8 | 746.3 |

SPAN = 220.0 FT (RULING SPAN = 203.0 FT)

| TEMP F | STRINGING SAG FT | STRINGING SAG IN | HORIZONTAL TENSION LB | FINAL SAG FT | FINAL SAG IN | HORIZONTAL TENSION LB |
|---|---|---|---|---|---|---|
| 0.0 | 1 | 6 | 3660.8 | 1 | 8 | 3204.0 |
| 10.0 | 1 | 9 | 3169.2 | 2 | 0 | 2710.6 |
| 30.0 | 2 | 3 | 2369.3 | 2 | 8 | 2017.4 |
| 40.0 | 2 | 7 | 2074.1 | 3 | 0 | 1786.7 |
| 50.0 | 2 | 11 | 1840.6 | 3 | 4 | 1608.4 |
| 60.0 | 3 | 3 | 1656.3 | 3 | 8 | 1468.0 |
| 70.0 | 3 | 7 | 1509.7 | 4 | 0 | 1355.2 |
| 80.0 | 3 | 11 | 1391.2 | 4 | 4 | 1262.7 |
| 90.0 | 4 | 2 | 1293.9 | 4 | 7 | 1185.5 |
| 100.0 | 4 | 6 | 1212.7 | 4 | 10 | 1120.0 |
| 110.0 | 4 | 9 | 1143.9 | 5 | 1 | 1063.7 |
| 120.0 | 5 | 0 | 1084.8 | 5 | 4 | 1014.6 |
| 130.0 | 5 | 3 | 1033.5 | 5 | 7 | 971.5 |
| 167.0 | 6 | 1 | 890.2 | 6 | 5 | 848.4 |
| 176.0 | 6 | 3 | 863.2 | 6 | 7 | 824.7 |
| 212.0 | 7 | 0 | 774.9 | 7 | 3 | 746.3 |

SPAN = 230.0 FT (RULING SPAN = 203.0 FT)

S- 8

| TEMP F | STRINGING SAG FT | STRINGING SAG IN | HORIZONTAL TENSION LB | FINAL SAG FT | FINAL SAG IN | HORIZONTAL TENSION LB |
|---|---|---|---|---|---|---|
| 0.0 | 1 | 7 | 3660.8 | 1 | 10 | 3204.0 |
| 10.0 | 1 | 10 | 3169.2 | 2 | 2 | 2710.6 |
| 30.0 | 2 | 6 | 2369.3 | 2 | 11 | 2017.4 |
| 40.0 | 2 | 10 | 2074.1 | 3 | 4 | 1786.7 |
| 50.0 | 3 | 3 | 1840.6 | 3 | 8 | 1608.4 |
| 60.0 | 3 | 7 | 1656.3 | 4 | 0 | 1468.0 |
| 70.0 | 3 | 11 | 1509.7 | 4 | 4 | 1355.2 |
| 80.0 | 4 | 3 | 1391.2 | 4 | 8 | 1262.7 |
| 90.0 | 4 | 7 | 1293.9 | 5 | 0 | 1185.5 |
| 100.0 | 4 | 11 | 1212.7 | 5 | 4 | 1120.0 |
| 110.0 | 5 | 2 | 1143.9 | 5 | 7 | 1063.7 |
| 120.0 | 5 | 6 | 1084.8 | 5 | 10 | 1014.6 |
| 130.0 | 5 | 9 | 1033.5 | 6 | 1 | 971.5 |
| 167.0 | 6 | 8 | 890.2 | 7 | 0 | 848.4 |
| 176.0 | 6 | 10 | 863.2 | 7 | 2 | 824.7 |
| 212.0 | 7 | 8 | 774.9 | 7 | 11 | 746.3 |

SOUTHWIRE COMPANY
CARROLLTON, GEORGIA

STRINGING TABLE
(CATENARY METHOD)

CHART NO: S- 9
FILE NO: 40058
DATE: 08/21/06

RULING SPAN = 209.0 FT

LOADING DISTRICT: LIGHT

CONDUCTOR: 954 KCM - 37 STR. AAC "MAGNOLIA"

NOTE: FOR STRINGING CALCULATIONS, THE HORIZONTAL TENSION OF THE RULING SPAN IS HELD CONSTANT (FOR EACH PARTICULAR TEMPERATURE) IN ORDER TO CALCULATE STRINGING SAGS FOR THE OTHER SPANS. THE FINAL DATA IS TO BE USED FOR PRE-STRESSED CABLE ONLY.

SPAN = 156.0 FT

(RULING SPAN = 209.0 FT)

| TEMP | STRINGING SAG | | HORIZONTAL TENSION | FINAL SAG | | HORIZONTAL TENSION |
|---|---|---|---|---|---|---|
| F | FT | IN | LB | FT | IN | LB |
| 0.0 | 0 | 9 | 3618.9 | 0 | 10 | 3156.0 |
| 10.0 | 0 | 10 | 3138.9 | 1 | 0 | 2682.6 |
| 30.0 | 1 | 2 | 2364.3 | 1 | 4 | 2018.6 |
| 40.0 | 1 | 4 | 2078.9 | 1 | 6 | 1796.2 |
| 50.0 | 1 | 6 | 1852.5 | 1 | 8 | 1623.0 |
| 60.0 | 1 | 8 | 1672.9 | 1 | 10 | 1485.7 |
| 70.0 | 1 | 9 | 1529.1 | 2 | 0 | 1374.7 |
| 80.0 | 1 | 11 | 1412.2 | 2 | 1 | 1283.2 |
| 90.0 | 2 | 1 | 1315.9 | 2 | 3 | 1206.5 |
| 100.0 | 2 | 2 | 1235.0 | 2 | 5 | 1141.3 |
| 110.0 | 2 | 4 | 1166.3 | 2 | 6 | 1085.0 |
| 120.0 | 2 | 6 | 1107.2 | 2 | 8 | 1035.8 |
| 130.0 | 2 | 7 | 1055.7 | 2 | 9 | 992.5 |
| 167.0 | 3 | 0 | 911.2 | 3 | 2 | 868.4 |
| 176.0 | 3 | 1 | 883.9 | 3 | 3 | 844.4 |
| 212.0 | 3 | 5 | 794.4 | 3 | 7 | 764.9 |

SPAN = 166.0 FT (RULING SPAN = 209.0 FT)

S- 9

| TEMP F | STRINGING SAG FT | STRINGING SAG IN | HORIZONTAL TENSION LB | FINAL SAG FT | FINAL SAG IN | HORIZONTAL TENSION LB |
|---|---|---|---|---|---|---|
| 0.0 | 0 | 10 | 3618.9 | 1 | 0 | 3156.0 |
| 10.0 | 1 | 0 | 3138.9 | 1 | 2 | 2682.6 |
| 30.0 | 1 | 4 | 2364.3 | 1 | 6 | 2018.6 |
| 40.0 | 1 | 6 | 2078.9 | 1 | 9 | 1796.2 |
| 50.0 | 1 | 8 | 1852.5 | 1 | 11 | 1623.0 |
| 60.0 | 1 | 10 | 1672.9 | 2 | 1 | 1485.7 |
| 70.0 | 2 | 0 | 1529.1 | 2 | 3 | 1374.7 |
| 80.0 | 2 | 2 | 1412.2 | 2 | 5 | 1283.2 |
| 90.0 | 2 | 4 | 1315.9 | 2 | 7 | 1206.5 |
| 100.0 | 2 | 6 | 1235.0 | 2 | 8 | 1141.3 |
| 110.0 | 2 | 8 | 1166.3 | 2 | 10 | 1085.0 |
| 120.0 | 2 | 9 | 1107.2 | 3 | 0 | 1035.8 |
| 130.0 | 2 | 11 | 1055.7 | 3 | 1 | 992.5 |
| 167.0 | 3 | 5 | 911.2 | 3 | 7 | 868.4 |
| 176.0 | 3 | 6 | 883.9 | 3 | 8 | 844.4 |
| 212.0 | 3 | 11 | 794.4 | 4 | 0 | 764.9 |

SPAN = 176.0 FT (RULING SPAN = 209.0 FT)

| TEMP F | STRINGING SAG FT | STRINGING SAG IN | HORIZONTAL TENSION LB | FINAL SAG FT | FINAL SAG IN | HORIZONTAL TENSION LB |
|---|---|---|---|---|---|---|
| 0.0 | 1 | 0 | 3618.9 | 1 | 1 | 3156.0 |
| 10.0 | 1 | 1 | 3138.9 | 1 | 4 | 2682.6 |
| 30.0 | 1 | 6 | 2364.3 | 1 | 9 | 2018.6 |
| 40.0 | 1 | 8 | 2078.9 | 1 | 11 | 1796.2 |
| 50.0 | 1 | 10 | 1852.5 | 2 | 2 | 1623.0 |
| 60.0 | 2 | 1 | 1672.9 | 2 | 4 | 1485.7 |
| 70.0 | 2 | 3 | 1529.1 | 2 | 6 | 1374.7 |
| 80.0 | 2 | 5 | 1412.2 | 2 | 8 | 1283.2 |
| 90.0 | 2 | 8 | 1315.9 | 2 | 11 | 1206.5 |
| 100.0 | 2 | 10 | 1235.0 | 3 | 0 | 1141.3 |
| 110.0 | 3 | 0 | 1166.3 | 3 | 2 | 1085.0 |
| 120.0 | 3 | 2 | 1107.2 | 3 | 4 | 1035.8 |
| 130.0 | 3 | 3 | 1055.7 | 3 | 6 | 992.5 |
| 167.0 | 3 | 10 | 911.2 | 4 | 0 | 868.4 |
| 176.0 | 3 | 11 | 883.9 | 4 | 1 | 844.4 |
| 212.0 | 4 | 4 | 794.4 | 4 | 6 | 764.9 |

SPAN = 186.0 FT (RULING SPAN = 209.0 FT)

S- 9

| TEMP F | STRINGING SAG FT | STRINGING SAG IN | HORIZONTAL TENSION LB | FINAL SAG FT | FINAL SAG IN | HORIZONTAL TENSION LB |
|---|---|---|---|---|---|---|
| 0.0 | 1 | 1 | 3618.9 | 1 | 3 | 3156.0 |
| 10.0 | 1 | 3 | 3138.9 | 1 | 5 | 2682.6 |
| 30.0 | 1 | 8 | 2364.3 | 1 | 11 | 2018.6 |
| 40.0 | 1 | 10 | 2078.9 | 2 | 2 | 1796.2 |
| 50.0 | 2 | 1 | 1852.5 | 2 | 5 | 1623.0 |
| 60.0 | 2 | 4 | 1672.9 | 2 | 7 | 1485.7 |
| 70.0 | 2 | 6 | 1529.1 | 2 | 10 | 1374.7 |
| 80.0 | 2 | 9 | 1412.2 | 3 | 0 | 1283.2 |
| 90.0 | 2 | 11 | 1315.9 | 3 | 3 | 1206.5 |
| 100.0 | 3 | 2 | 1235.0 | 3 | 5 | 1141.3 |
| 110.0 | 3 | 4 | 1166.3 | 3 | 7 | 1085.0 |
| 120.0 | 3 | 6 | 1107.2 | 3 | 9 | 1035.8 |
| 130.0 | 3 | 8 | 1055.7 | 3 | 11 | 992.5 |
| 167.0 | 4 | 3 | 911.2 | 4 | 6 | 868.4 |
| 176.0 | 4 | 5 | 883.9 | 4 | 7 | 844.4 |
| 212.0 | 4 | 11 | 794.4 | 5 | 1 | 764.9 |

SPAN = 196.0 FT (RULING SPAN = 209.0 FT)

| TEMP F | STRINGING SAG FT | STRINGING SAG IN | HORIZONTAL TENSION LB | FINAL SAG FT | FINAL SAG IN | HORIZONTAL TENSION LB |
|---|---|---|---|---|---|---|
| 0.0 | 1 | 2 | 3618.9 | 1 | 4 | 3156.0 |
| 10.0 | 1 | 4 | 3138.9 | 1 | 7 | 2682.6 |
| 30.0 | 1 | 10 | 2364.3 | 2 | 2 | 2018.6 |
| 40.0 | 2 | 1 | 2078.9 | 2 | 5 | 1796.2 |
| 50.0 | 2 | 4 | 1852.5 | 2 | 8 | 1623.0 |
| 60.0 | 2 | 7 | 1672.9 | 2 | 11 | 1485.7 |
| 70.0 | 2 | 10 | 1529.1 | 3 | 2 | 1374.7 |
| 80.0 | 3 | 1 | 1412.2 | 3 | 4 | 1283.2 |
| 90.0 | 3 | 3 | 1315.9 | 3 | 7 | 1206.5 |
| 100.0 | 3 | 6 | 1235.0 | 3 | 9 | 1141.3 |
| 110.0 | 3 | 8 | 1166.3 | 4 | 0 | 1085.0 |
| 120.0 | 3 | 11 | 1107.2 | 4 | 2 | 1035.8 |
| 130.0 | 4 | 1 | 1055.7 | 4 | 4 | 992.5 |
| 167.0 | 4 | 9 | 911.2 | 4 | 11 | 868.4 |
| 176.0 | 4 | 10 | 883.9 | 5 | 1 | 844.4 |
| 212.0 | 5 | 5 | 794.4 | 5 | 8 | 764.9 |

SPAN = 206.0 FT (RULING SPAN = 209.0 FT)

S- 9

| TEMP F | STRINGING SAG FT | STRINGING SAG IN | HORIZONTAL TENSION LB | FINAL SAG FT | FINAL SAG IN | HORIZONTAL TENSION LB |
|---|---|---|---|---|---|---|
| 0.0 | 1 | 4 | 3618.9 | 1 | 6 | 3156.0 |
| 10.0 | 1 | 6 | 3138.9 | 1 | 9 | 2682.6 |
| 30.0 | 2 | 0 | 2364.3 | 2 | 4 | 2018.6 |
| 40.0 | 2 | 3 | 2078.9 | 2 | 8 | 1796.2 |
| 50.0 | 2 | 7 | 1852.5 | 2 | 11 | 1623.0 |
| 60.0 | 2 | 10 | 1672.9 | 3 | 2 | 1485.7 |
| 70.0 | 3 | 1 | 1529.1 | 3 | 5 | 1374.7 |
| 80.0 | 3 | 4 | 1412.2 | 3 | 8 | 1283.2 |
| 90.0 | 3 | 7 | 1315.9 | 3 | 11 | 1206.5 |
| 100.0 | 3 | 10 | 1235.0 | 4 | 2 | 1141.3 |
| 110.0 | 4 | 1 | 1166.3 | 4 | 5 | 1085.0 |
| 120.0 | 4 | 4 | 1107.2 | 4 | 7 | 1035.8 |
| 130.0 | 4 | 6 | 1055.7 | 4 | 9 | 992.5 |
| 167.0 | 5 | 3 | 911.2 | 5 | 6 | 868.4 |
| 176.0 | 5 | 5 | 883.9 | 5 | 8 | 844.4 |
| 212.0 | 6 | 0 | 794.4 | 6 | 3 | 764.9 |

SPAN = 216.0 FT (RULING SPAN = 209.0 FT)

| TEMP F | STRINGING SAG FT | STRINGING SAG IN | HORIZONTAL TENSION LB | FINAL SAG FT | FINAL SAG IN | HORIZONTAL TENSION LB |
|---|---|---|---|---|---|---|
| 0.0 | 1 | 5 | 3618.9 | 1 | 8 | 3156.0 |
| 10.0 | 1 | 8 | 3138.9 | 1 | 11 | 2682.6 |
| 30.0 | 2 | 3 | 2364.3 | 2 | 7 | 2018.6 |
| 40.0 | 2 | 6 | 2078.9 | 2 | 11 | 1796.2 |
| 50.0 | 2 | 10 | 1852.5 | 3 | 3 | 1623.0 |
| 60.0 | 3 | 1 | 1672.9 | 3 | 6 | 1485.7 |
| 70.0 | 3 | 5 | 1529.1 | 3 | 10 | 1374.7 |
| 80.0 | 3 | 8 | 1412.2 | 4 | 1 | 1283.2 |
| 90.0 | 4 | 0 | 1315.9 | 4 | 4 | 1206.5 |
| 100.0 | 4 | 3 | 1235.0 | 4 | 7 | 1141.3 |
| 110.0 | 4 | 6 | 1166.3 | 4 | 10 | 1085.0 |
| 120.0 | 4 | 9 | 1107.2 | 5 | 1 | 1035.8 |
| 130.0 | 4 | 11 | 1055.7 | 5 | 3 | 992.5 |
| 167.0 | 5 | 9 | 911.2 | 6 | 0 | 868.4 |
| 176.0 | 5 | 11 | 883.9 | 6 | 2 | 844.4 |
| 212.0 | 6 | 7 | 794.4 | 6 | 10 | 764.9 |

SPAN = 226.0 FT (RULING SPAN = 209.0 FT)

S- 9

| TEMP F | STRINGING SAG FT | STRINGING SAG IN | HORIZONTAL TENSION LB | FINAL SAG FT | FINAL SAG IN | HORIZONTAL TENSION LB |
|---|---|---|---|---|---|---|
| 0.0 | 1 | 7 | 3618.9 | 1 | 10 | 3156.0 |
| 10.0 | 1 | 10 | 3138.9 | 2 | 2 | 2682.6 |
| 30.0 | 2 | 5 | 2364.3 | 2 | 10 | 2018.6 |
| 40.0 | 2 | 9 | 2078.9 | 3 | 2 | 1796.2 |
| 50.0 | 3 | 1 | 1852.5 | 3 | 6 | 1623.0 |
| 60.0 | 3 | 5 | 1672.9 | 3 | 10 | 1485.7 |
| 70.0 | 3 | 9 | 1529.1 | 4 | 2 | 1374.7 |
| 80.0 | 4 | 1 | 1412.2 | 4 | 6 | 1283.2 |
| 90.0 | 4 | 4 | 1315.9 | 4 | 9 | 1206.5 |
| 100.0 | 4 | 8 | 1235.0 | 5 | 0 | 1141.3 |
| 110.0 | 4 | 11 | 1166.3 | 5 | 3 | 1085.0 |
| 120.0 | 5 | 2 | 1107.2 | 5 | 6 | 1035.8 |
| 130.0 | 5 | 5 | 1055.7 | 5 | 9 | 992.5 |
| 167.0 | 6 | 3 | 911.2 | 6 | 7 | 868.4 |
| 176.0 | 6 | 6 | 883.9 | 6 | 9 | 844.4 |
| 212.0 | 7 | 3 | 794.4 | 7 | 6 | 764.9 |

SPAN = 236.0 FT (RULING SPAN = 209.0 FT)

| TEMP F | STRINGING SAG FT | STRINGING SAG IN | HORIZONTAL TENSION LB | FINAL SAG FT | FINAL SAG IN | HORIZONTAL TENSION LB |
|---|---|---|---|---|---|---|
| 0.0 | 1 | 9 | 3618.9 | 2 | 0 | 3156.0 |
| 10.0 | 2 | 0 | 3138.9 | 2 | 4 | 2682.6 |
| 30.0 | 2 | 8 | 2364.3 | 3 | 1 | 2018.6 |
| 40.0 | 3 | 0 | 2078.9 | 3 | 6 | 1796.2 |
| 50.0 | 3 | 4 | 1852.5 | 3 | 10 | 1623.0 |
| 60.0 | 3 | 9 | 1672.9 | 4 | 2 | 1485.7 |
| 70.0 | 4 | 1 | 1529.1 | 4 | 6 | 1374.7 |
| 80.0 | 4 | 5 | 1412.2 | 4 | 10 | 1283.2 |
| 90.0 | 4 | 9 | 1315.9 | 5 | 2 | 1206.5 |
| 100.0 | 5 | 1 | 1235.0 | 5 | 6 | 1141.3 |
| 110.0 | 5 | 4 | 1166.3 | 5 | 9 | 1085.0 |
| 120.0 | 5 | 8 | 1107.2 | 6 | 0 | 1035.8 |
| 130.0 | 5 | 11 | 1055.7 | 6 | 3 | 992.5 |
| 167.0 | 6 | 10 | 911.2 | 7 | 2 | 868.4 |
| 176.0 | 7 | 1 | 883.9 | 7 | 5 | 844.4 |
| 212.0 | 7 | 10 | 794.4 | 8 | 2 | 764.9 |

SOUTHWIRE COMPANY
CARROLLTON, GEORGIA

STRINGING TABLE
(CATENARY METHOD)

CHART NO: S-10
FILE NO: 40058
DATE: 08/21/06

RULING SPAN = 229.0 FT

LOADING DISTRICT: LIGHT

CONDUCTOR: 954 KCM - 37 STR. AAC "MAGNOLIA"

NOTE: FOR STRINGING CALCULATIONS, THE HORIZONTAL TENSION OF THE RULING SPAN IS HELD CONSTANT (FOR EACH PARTICULAR TEMPERATURE) IN ORDER TO CALCULATE STRINGING SAGS FOR THE OTHER SPANS. THE FINAL DATA IS TO BE USED FOR PRE-STRESSED CABLE ONLY.

SPAN = 162.0 FT

(RULING SPAN = 229.0 FT)

| TEMP | STRINGING SAG | | HORIZONTAL TENSION | FINAL SAG | | HORIZONTAL TENSION |
|---|---|---|---|---|---|---|
| F | FT | IN | LB | FT | IN | LB |
| 0.0 | 0 | 10 | 3482.0 | 1 | 0 | 3011.7 |
| 10.0 | 1 | 0 | 3042.2 | 1 | 2 | 2601.1 |
| 30.0 | 1 | 3 | 2348.7 | 1 | 5 | 2024.4 |
| 40.0 | 1 | 5 | 2093.9 | 1 | 7 | 1826.1 |
| 50.0 | 1 | 7 | 1888.9 | 1 | 9 | 1668.4 |
| 60.0 | 1 | 8 | 1723.7 | 1 | 11 | 1540.8 |
| 70.0 | 1 | 10 | 1588.9 | 2 | 1 | 1435.7 |
| 80.0 | 2 | 0 | 1477.7 | 2 | 2 | 1347.8 |
| 90.0 | 2 | 1 | 1384.5 | 2 | 4 | 1273.1 |
| 100.0 | 2 | 3 | 1305.4 | 2 | 5 | 1208.8 |
| 110.0 | 2 | 5 | 1237.4 | 2 | 7 | 1152.7 |
| 120.0 | 2 | 6 | 1178.3 | 2 | 8 | 1103.5 |
| 130.0 | 2 | 7 | 1126.4 | 2 | 9 | 1059.8 |
| 167.0 | 3 | 0 | 978.9 | 3 | 2 | 932.8 |
| 176.0 | 3 | 1 | 950.6 | 3 | 3 | 908.0 |
| 212.0 | 3 | 5 | 857.5 | 3 | 7 | 825.3 |

SPAN = 172.0 FT (RULING SPAN = 229.0 FT)

S-10

| TEMP F | STRINGING SAG FT | STRINGING SAG IN | HORIZONTAL TENSION LB | FINAL SAG FT | FINAL SAG IN | HORIZONTAL TENSION LB |
|---|---|---|---|---|---|---|
| 0.0 | 0 | 11 | 3482.0 | 1 | 1 | 3011.7 |
| 10.0 | 1 | 1 | 3042.2 | 1 | 3 | 2601.1 |
| 30.0 | 1 | 5 | 2348.7 | 1 | 8 | 2024.4 |
| 40.0 | 1 | 7 | 2093.9 | 1 | 10 | 1826.1 |
| 50.0 | 1 | 9 | 1888.9 | 2 | 0 | 1668.4 |
| 60.0 | 1 | 11 | 1723.7 | 2 | 2 | 1540.8 |
| 70.0 | 2 | 1 | 1588.9 | 2 | 4 | 1435.7 |
| 80.0 | 2 | 3 | 1477.7 | 2 | 6 | 1347.8 |
| 90.0 | 2 | 5 | 1384.5 | 2 | 7 | 1273.1 |
| 100.0 | 2 | 6 | 1305.4 | 2 | 9 | 1208.8 |
| 110.0 | 2 | 8 | 1237.4 | 2 | 10 | 1152.7 |
| 120.0 | 2 | 10 | 1178.3 | 3 | 0 | 1103.5 |
| 130.0 | 2 | 11 | 1126.4 | 3 | 2 | 1059.8 |
| 167.0 | 3 | 5 | 978.9 | 3 | 7 | 932.8 |
| 176.0 | 3 | 6 | 950.6 | 3 | 8 | 908.0 |
| 212.0 | 3 | 10 | 857.5 | 4 | 0 | 825.3 |

SPAN = 182.0 FT (RULING SPAN = 229.0 FT)

| TEMP F | STRINGING SAG FT | STRINGING SAG IN | HORIZONTAL TENSION LB | FINAL SAG FT | FINAL SAG IN | HORIZONTAL TENSION LB |
|---|---|---|---|---|---|---|
| 0.0 | 1 | 1 | 3482.0 | 1 | 3 | 3011.7 |
| 10.0 | 1 | 3 | 3042.2 | 1 | 5 | 2601.1 |
| 30.0 | 1 | 7 | 2348.7 | 1 | 10 | 2024.4 |
| 40.0 | 1 | 9 | 2093.9 | 2 | 0 | 1826.1 |
| 50.0 | 2 | 0 | 1888.9 | 2 | 3 | 1668.4 |
| 60.0 | 2 | 2 | 1723.7 | 2 | 5 | 1540.8 |
| 70.0 | 2 | 4 | 1588.9 | 2 | 7 | 1435.7 |
| 80.0 | 2 | 6 | 1477.7 | 2 | 9 | 1347.8 |
| 90.0 | 2 | 8 | 1384.5 | 2 | 11 | 1273.1 |
| 100.0 | 2 | 10 | 1305.4 | 3 | 1 | 1208.8 |
| 110.0 | 3 | 0 | 1237.4 | 3 | 3 | 1152.7 |
| 120.0 | 3 | 2 | 1178.3 | 3 | 4 | 1103.5 |
| 130.0 | 3 | 4 | 1126.4 | 3 | 6 | 1059.8 |
| 167.0 | 3 | 9 | 978.9 | 4 | 0 | 932.8 |
| 176.0 | 3 | 11 | 950.6 | 4 | 1 | 908.0 |
| 212.0 | 4 | 4 | 857.5 | 4 | 6 | 825.3 |

SPAN = 192.0 FT (RULING SPAN = 229.0 FT)

S-10

| TEMP F | STRINGING SAG FT | STRINGING SAG IN | HORIZONTAL TENSION LB | FINAL SAG FT | FINAL SAG IN | HORIZONTAL TENSION LB |
|---|---|---|---|---|---|---|
| 0.0 | 1 | 2 | 3482.0 | 1 | 4 | 3011.7 |
| 10.0 | 1 | 4 | 3042.2 | 1 | 7 | 2601.1 |
| 30.0 | 1 | 9 | 2348.7 | 2 | 0 | 2024.4 |
| 40.0 | 2 | 0 | 2093.9 | 2 | 3 | 1826.1 |
| 50.0 | 2 | 2 | 1888.9 | 2 | 6 | 1668.4 |
| 60.0 | 2 | 5 | 1723.7 | 2 | 8 | 1540.8 |
| 70.0 | 2 | 7 | 1588.9 | 2 | 11 | 1435.7 |
| 80.0 | 2 | 10 | 1477.7 | 3 | 1 | 1347.8 |
| 90.0 | 3 | 0 | 1384.5 | 3 | 3 | 1273.1 |
| 100.0 | 3 | 2 | 1305.4 | 3 | 5 | 1208.8 |
| 110.0 | 3 | 4 | 1237.4 | 3 | 7 | 1152.7 |
| 120.0 | 3 | 6 | 1178.3 | 3 | 9 | 1103.5 |
| 130.0 | 3 | 8 | 1126.4 | 3 | 11 | 1059.8 |
| 167.0 | 4 | 3 | 978.9 | 4 | 5 | 932.8 |
| 176.0 | 4 | 4 | 950.6 | 4 | 7 | 908.0 |
| 212.0 | 4 | 10 | 857.5 | 5 | 0 | 825.3 |

SPAN = 202.0 FT (RULING SPAN = 229.0 FT)

| TEMP F | STRINGING SAG FT | STRINGING SAG IN | HORIZONTAL TENSION LB | FINAL SAG FT | FINAL SAG IN | HORIZONTAL TENSION LB |
|---|---|---|---|---|---|---|
| 0.0 | 1 | 4 | 3482.0 | 1 | 6 | 3011.7 |
| 10.0 | 1 | 6 | 3042.2 | 1 | 9 | 2601.1 |
| 30.0 | 1 | 11 | 2348.7 | 2 | 3 | 2024.4 |
| 40.0 | 2 | 2 | 2093.9 | 2 | 6 | 1826.1 |
| 50.0 | 2 | 5 | 1888.9 | 2 | 9 | 1668.4 |
| 60.0 | 2 | 8 | 1723.7 | 3 | 0 | 1540.8 |
| 70.0 | 2 | 11 | 1588.9 | 3 | 2 | 1435.7 |
| 80.0 | 3 | 1 | 1477.7 | 3 | 5 | 1347.8 |
| 90.0 | 3 | 4 | 1384.5 | 3 | 7 | 1273.1 |
| 100.0 | 3 | 6 | 1305.4 | 3 | 9 | 1208.8 |
| 110.0 | 3 | 8 | 1237.4 | 4 | 0 | 1152.7 |
| 120.0 | 3 | 11 | 1178.3 | 4 | 2 | 1103.5 |
| 130.0 | 4 | 1 | 1126.4 | 4 | 4 | 1059.8 |
| 167.0 | 4 | 8 | 978.9 | 4 | 11 | 932.8 |
| 176.0 | 4 | 10 | 950.6 | 5 | 0 | 908.0 |
| 212.0 | 5 | 4 | 857.5 | 5 | 6 | 825.3 |

SPAN = 212.0 FT (RULING SPAN = 229.0 FT)

S-10

| TEMP F | STRINGING SAG FT | STRINGING SAG IN | HORIZONTAL TENSION LB | FINAL SAG FT | FINAL SAG IN | HORIZONTAL TENSION LB |
|---|---|---|---|---|---|---|
| 0.0 | 1 | 5 | 3482.0 | 1 | 8 | 3011.7 |
| 10.0 | 1 | 8 | 3042.2 | 1 | 11 | 2601.1 |
| 30.0 | 2 | 2 | 2348.7 | 2 | 6 | 2024.4 |
| 40.0 | 2 | 5 | 2093.9 | 2 | 9 | 1826.1 |
| 50.0 | 2 | 8 | 1888.9 | 3 | 0 | 1668.4 |
| 60.0 | 2 | 11 | 1723.7 | 3 | 3 | 1540.8 |
| 70.0 | 3 | 2 | 1588.9 | 3 | 6 | 1435.7 |
| 80.0 | 3 | 5 | 1477.7 | 3 | 9 | 1347.8 |
| 90.0 | 3 | 8 | 1384.5 | 3 | 11 | 1273.1 |
| 100.0 | 3 | 10 | 1305.4 | 4 | 2 | 1208.8 |
| 110.0 | 4 | 1 | 1237.4 | 4 | 4 | 1152.7 |
| 120.0 | 4 | 3 | 1178.3 | 4 | 7 | 1103.5 |
| 130.0 | 4 | 6 | 1126.4 | 4 | 9 | 1059.8 |
| 167.0 | 5 | 2 | 978.9 | 5 | 5 | 932.8 |
| 176.0 | 5 | 4 | 950.6 | 5 | 7 | 908.0 |
| 212.0 | 5 | 10 | 857.5 | 6 | 1 | 825.3 |

SPAN = 222.0 FT (RULING SPAN = 229.0 FT)

| TEMP F | STRINGING SAG FT | STRINGING SAG IN | HORIZONTAL TENSION LB | FINAL SAG FT | FINAL SAG IN | HORIZONTAL TENSION LB |
|---|---|---|---|---|---|---|
| 0.0 | 1 | 7 | 3482.0 | 1 | 10 | 3011.7 |
| 10.0 | 1 | 10 | 3042.2 | 2 | 1 | 2601.1 |
| 30.0 | 2 | 4 | 2348.7 | 2 | 9 | 2024.4 |
| 40.0 | 2 | 8 | 2093.9 | 3 | 0 | 1826.1 |
| 50.0 | 2 | 11 | 1888.9 | 3 | 4 | 1668.4 |
| 60.0 | 3 | 2 | 1723.7 | 3 | 7 | 1540.8 |
| 70.0 | 3 | 6 | 1588.9 | 3 | 10 | 1435.7 |
| 80.0 | 3 | 9 | 1477.7 | 4 | 1 | 1347.8 |
| 90.0 | 4 | 0 | 1384.5 | 4 | 4 | 1273.1 |
| 100.0 | 4 | 3 | 1305.4 | 4 | 7 | 1208.8 |
| 110.0 | 4 | 6 | 1237.4 | 4 | 9 | 1152.7 |
| 120.0 | 4 | 8 | 1178.3 | 5 | 0 | 1103.5 |
| 130.0 | 4 | 11 | 1126.4 | 5 | 3 | 1059.8 |
| 167.0 | 5 | 8 | 978.9 | 5 | 11 | 932.8 |
| 176.0 | 5 | 10 | 950.6 | 6 | 1 | 908.0 |
| 212.0 | 6 | 5 | 857.5 | 6 | 8 | 825.3 |

SPAN = 232.0 FT (RULING SPAN = 229.0 FT)

S-10

| TEMP F | STRINGING SAG FT | STRINGING SAG IN | HORIZONTAL TENSION LB | FINAL SAG FT | FINAL SAG IN | HORIZONTAL TENSION LB |
|---|---|---|---|---|---|---|
| 0.0 | 1 | 9 | 3482.0 | 2 | 0 | 3011.7 |
| 10.0 | 2 | 0 | 3042.2 | 2 | 4 | 2601.1 |
| 30.0 | 2 | 7 | 2348.7 | 3 | 0 | 2024.4 |
| 40.0 | 2 | 11 | 2093.9 | 3 | 4 | 1826.1 |
| 50.0 | 3 | 2 | 1888.9 | 3 | 7 | 1668.4 |
| 60.0 | 3 | 6 | 1723.7 | 3 | 11 | 1540.8 |
| 70.0 | 3 | 10 | 1588.9 | 4 | 2 | 1435.7 |
| 80.0 | 4 | 1 | 1477.7 | 4 | 6 | 1347.8 |
| 90.0 | 4 | 4 | 1384.5 | 4 | 9 | 1273.1 |
| 100.0 | 4 | 7 | 1305.4 | 5 | 0 | 1208.8 |
| 110.0 | 4 | 10 | 1237.4 | 5 | 3 | 1152.7 |
| 120.0 | 5 | 1 | 1178.3 | 5 | 6 | 1103.5 |
| 130.0 | 5 | 4 | 1126.4 | 5 | 8 | 1059.8 |
| 167.0 | 6 | 2 | 978.9 | 6 | 6 | 932.8 |
| 176.0 | 6 | 4 | 950.6 | 6 | 8 | 908.0 |
| 212.0 | 7 | 0 | 857.5 | 7 | 4 | 825.3 |

SPAN = 242.0 FT (RULING SPAN = 229.0 FT)

| TEMP F | STRINGING SAG FT | STRINGING SAG IN | HORIZONTAL TENSION LB | FINAL SAG FT | FINAL SAG IN | HORIZONTAL TENSION LB |
|---|---|---|---|---|---|---|
| 0.0 | 1 | 11 | 3482.0 | 2 | 2 | 3011.7 |
| 10.0 | 2 | 2 | 3042.2 | 2 | 6 | 2601.1 |
| 30.0 | 2 | 10 | 2348.7 | 3 | 3 | 2024.4 |
| 40.0 | 3 | 2 | 2093.9 | 3 | 7 | 1826.1 |
| 50.0 | 3 | 6 | 1888.9 | 3 | 11 | 1668.4 |
| 60.0 | 3 | 10 | 1723.7 | 4 | 3 | 1540.8 |
| 70.0 | 4 | 2 | 1588.9 | 4 | 7 | 1435.7 |
| 80.0 | 4 | 5 | 1477.7 | 4 | 10 | 1347.8 |
| 90.0 | 4 | 9 | 1384.5 | 5 | 2 | 1273.1 |
| 100.0 | 5 | 0 | 1305.4 | 5 | 5 | 1208.8 |
| 110.0 | 5 | 4 | 1237.4 | 5 | 8 | 1152.7 |
| 120.0 | 5 | 7 | 1178.3 | 5 | 11 | 1103.5 |
| 130.0 | 5 | 10 | 1126.4 | 6 | 2 | 1059.8 |
| 167.0 | 6 | 8 | 978.9 | 7 | 0 | 932.8 |
| 176.0 | 6 | 11 | 950.6 | 7 | 3 | 908.0 |
| 212.0 | 7 | 8 | 857.5 | 7 | 11 | 825.3 |

SPAN = 252.0 FT (RULING SPAN = 229.0 FT)

S-10

| TEMP F | STRINGING SAG FT | STRINGING SAG IN | HORIZONTAL TENSION LB | FINAL SAG FT | FINAL SAG IN | HORIZONTAL TENSION LB |
|---|---|---|---|---|---|---|
| 0.0 | 2 | 1 | 3482.0 | 2 | 4 | 3011.7 |
| 10.0 | 2 | 4 | 3042.2 | 2 | 9 | 2601.1 |
| 30.0 | 3 | 0 | 2348.7 | 3 | 6 | 2024.4 |
| 40.0 | 3 | 5 | 2093.9 | 3 | 11 | 1826.1 |
| 50.0 | 3 | 9 | 1888.9 | 4 | 3 | 1668.4 |
| 60.0 | 4 | 2 | 1723.7 | 4 | 7 | 1540.8 |
| 70.0 | 4 | 6 | 1588.9 | 4 | 11 | 1435.7 |
| 80.0 | 4 | 10 | 1477.7 | 5 | 3 | 1347.8 |
| 90.0 | 5 | 2 | 1384.5 | 5 | 7 | 1273.1 |
| 100.0 | 5 | 5 | 1305.4 | 5 | 11 | 1208.8 |
| 110.0 | 5 | 9 | 1237.4 | 6 | 2 | 1152.7 |
| 120.0 | 6 | 0 | 1178.3 | 6 | 5 | 1103.5 |
| 130.0 | 6 | 4 | 1126.4 | 6 | 9 | 1059.8 |
| 167.0 | 7 | 3 | 978.9 | 7 | 8 | 932.8 |
| 176.0 | 7 | 6 | 950.6 | 7 | 10 | 908.0 |
| 212.0 | 8 | 4 | 857.5 | 8 | 8 | 825.3 |

SPAN = 262.0 FT (RULING SPAN = 229.0 FT)

| TEMP F | STRINGING SAG FT | STRINGING SAG IN | HORIZONTAL TENSION LB | FINAL SAG FT | FINAL SAG IN | HORIZONTAL TENSION LB |
|---|---|---|---|---|---|---|
| 0.0 | 2 | 2 | 3482.0 | 2 | 7 | 3011.7 |
| 10.0 | 2 | 6 | 3042.2 | 2 | 11 | 2601.1 |
| 30.0 | 3 | 3 | 2348.7 | 3 | 10 | 2024.4 |
| 40.0 | 3 | 8 | 2093.9 | 4 | 3 | 1826.1 |
| 50.0 | 4 | 1 | 1888.9 | 4 | 7 | 1668.4 |
| 60.0 | 4 | 6 | 1723.7 | 5 | 0 | 1540.8 |
| 70.0 | 4 | 10 | 1588.9 | 5 | 4 | 1435.7 |
| 80.0 | 5 | 2 | 1477.7 | 5 | 8 | 1347.8 |
| 90.0 | 5 | 7 | 1384.5 | 6 | 1 | 1273.1 |
| 100.0 | 5 | 11 | 1305.4 | 6 | 4 | 1208.8 |
| 110.0 | 6 | 3 | 1237.4 | 6 | 8 | 1152.7 |
| 120.0 | 6 | 6 | 1178.3 | 7 | 0 | 1103.5 |
| 130.0 | 6 | 10 | 1126.4 | 7 | 3 | 1059.8 |
| 167.0 | 7 | 10 | 978.9 | 8 | 3 | 932.8 |
| 176.0 | 8 | 1 | 950.6 | 8 | 6 | 908.0 |
| 212.0 | 9 | 0 | 857.5 | 9 | 4 | 825.3 |

SPAN = 272.0 FT (RULING SPAN = 229.0 FT)

S-10

| TEMP F | STRINGING SAG FT | STRINGING SAG IN | HORIZONTAL TENSION LB | FINAL SAG FT | FINAL SAG IN | HORIZONTAL TENSION LB |
|---|---|---|---|---|---|---|
| 0.0 | 2 | 5 | 3482.0 | 2 | 9 | 3011.7 |
| 10.0 | 2 | 9 | 3042.2 | 3 | 2 | 2601.1 |
| 30.0 | 3 | 6 | 2348.7 | 4 | 1 | 2024.4 |
| 40.0 | 3 | 11 | 2093.9 | 4 | 6 | 1826.1 |
| 50.0 | 4 | 5 | 1888.9 | 5 | 0 | 1668.4 |
| 60.0 | 4 | 10 | 1723.7 | 5 | 5 | 1540.8 |
| 70.0 | 5 | 3 | 1588.9 | 5 | 9 | 1435.7 |
| 80.0 | 5 | 7 | 1477.7 | 6 | 2 | 1347.8 |
| 90.0 | 6 | 0 | 1384.5 | 6 | 6 | 1273.1 |
| 100.0 | 6 | 4 | 1305.4 | 6 | 10 | 1208.8 |
| 110.0 | 6 | 8 | 1237.4 | 7 | 2 | 1152.7 |
| 120.0 | 7 | 0 | 1178.3 | 7 | 6 | 1103.5 |
| 130.0 | 7 | 4 | 1126.4 | 7 | 10 | 1059.8 |
| 167.0 | 8 | 6 | 978.9 | 8 | 11 | 932.8 |
| 176.0 | 8 | 9 | 950.6 | 9 | 2 | 908.0 |
| 212.0 | 9 | 8 | 857.5 | 10 | 1 | 825.3 |

SPAN = 282.0 FT (RULING SPAN = 229.0 FT)

| TEMP F | STRINGING SAG FT | STRINGING SAG IN | HORIZONTAL TENSION LB | FINAL SAG FT | FINAL SAG IN | HORIZONTAL TENSION LB |
|---|---|---|---|---|---|---|
| 0.0 | 2 | 7 | 3482.0 | 2 | 11 | 3011.7 |
| 10.0 | 2 | 11 | 3042.2 | 3 | 5 | 2601.1 |
| 30.0 | 3 | 10 | 2348.7 | 4 | 5 | 2024.4 |
| 40.0 | 4 | 3 | 2093.9 | 4 | 11 | 1826.1 |
| 50.0 | 4 | 9 | 1888.9 | 5 | 4 | 1668.4 |
| 60.0 | 5 | 2 | 1723.7 | 5 | 9 | 1540.8 |
| 70.0 | 5 | 7 | 1588.9 | 6 | 2 | 1435.7 |
| 80.0 | 6 | 0 | 1477.7 | 6 | 7 | 1347.8 |
| 90.0 | 6 | 5 | 1384.5 | 7 | 0 | 1273.1 |
| 100.0 | 6 | 10 | 1305.4 | 7 | 4 | 1208.8 |
| 110.0 | 7 | 2 | 1237.4 | 7 | 9 | 1152.7 |
| 120.0 | 7 | 7 | 1178.3 | 8 | 1 | 1103.5 |
| 130.0 | 7 | 11 | 1126.4 | 8 | 5 | 1059.8 |
| 167.0 | 9 | 1 | 978.9 | 9 | 7 | 932.8 |
| 176.0 | 9 | 5 | 950.6 | 9 | 10 | 908.0 |
| 212.0 | 10 | 5 | 857.5 | 10 | 10 | 825.3 |

SOUTHWIRE COMPANY
CARROLLTON, GEORGIA

STRINGING TABLE
(CATENARY METHOD)

CHART NO: S-11
FILE NO: 40058
DATE: 08/21/06

RULING SPAN = 248.0 FT

LOADING DISTRICT: LIGHT

CONDUCTOR: 954 KCM - 37 STR. AAC "MAGNOLIA"

NOTE: FOR STRINGING CALCULATIONS, THE HORIZONTAL TENSION OF THE RULING SPAN IS HELD CONSTANT (FOR EACH PARTICULAR TEMPERATURE) IN ORDER TO CALCULATE STRINGING SAGS FOR THE OTHER SPANS. THE FINAL DATA IS TO BE USED FOR PRE-STRESSED CABLE ONLY.

SPAN = 130.0 FT

(RULING SPAN = 248.0 FT)

| TEMP | STRINGING SAG | | HORIZONTAL TENSION | FINAL SAG | | HORIZONTAL TENSION |
|---|---|---|---|---|---|---|
| F | FT | IN | LB | FT | IN | LB |
| 0.0 | 0 | 7 | 3357.9 | 0 | 8 | 2896.0 |
| 10.0 | 0 | 8 | 2957.6 | 0 | 9 | 2538.8 |
| 30.0 | 0 | 10 | 2335.8 | 0 | 11 | 2031.6 |
| 40.0 | 0 | 11 | 2106.2 | 1 | 0 | 1852.6 |
| 50.0 | 1 | 0 | 1919.3 | 1 | 1 | 1707.7 |
| 60.0 | 1 | 1 | 1766.3 | 1 | 2 | 1588.4 |
| 70.0 | 1 | 2 | 1639.8 | 1 | 3 | 1488.7 |
| 80.0 | 1 | 3 | 1533.8 | 1 | 4 | 1404.1 |
| 90.0 | 1 | 4 | 1443.8 | 1 | 5 | 1331.4 |
| 100.0 | 1 | 5 | 1366.7 | 1 | 6 | 1268.3 |
| 110.0 | 1 | 5 | 1299.7 | 1 | 7 | 1212.9 |
| 120.0 | 1 | 6 | 1241.1 | 1 | 8 | 1163.8 |
| 130.0 | 1 | 7 | 1189.2 | 1 | 8 | 1119.9 |
| 167.0 | 1 | 10 | 1039.9 | 1 | 11 | 991.1 |
| 176.0 | 1 | 10 | 1011.0 | 2 | 0 | 965.8 |
| 212.0 | 2 | 1 | 915.1 | 2 | 2 | 880.6 |

SPAN = 140.0 FT (RULING SPAN = 248.0 FT)

S-11

| TEMP F | STRINGING SAG FT | STRINGING SAG IN | HORIZONTAL TENSION LB | FINAL SAG FT | FINAL SAG IN | HORIZONTAL TENSION LB |
|---|---|---|---|---|---|---|
| 0.0 | 0 | 8 | 3357.9 | 0 | 9 | 2896.0 |
| 10.0 | 0 | 9 | 2957.6 | 0 | 10 | 2538.8 |
| 30.0 | 0 | 11 | 2335.8 | 1 | 1 | 2031.6 |
| 40.0 | 1 | 1 | 2106.2 | 1 | 2 | 1852.6 |
| 50.0 | 1 | 2 | 1919.3 | 1 | 3 | 1707.7 |
| 60.0 | 1 | 3 | 1766.3 | 1 | 5 | 1588.4 |
| 70.0 | 1 | 4 | 1639.8 | 1 | 6 | 1488.7 |
| 80.0 | 1 | 5 | 1533.8 | 1 | 7 | 1404.1 |
| 90.0 | 1 | 6 | 1443.8 | 1 | 8 | 1331.4 |
| 100.0 | 1 | 7 | 1366.7 | 1 | 9 | 1268.3 |
| 110.0 | 1 | 8 | 1299.7 | 1 | 10 | 1212.9 |
| 120.0 | 1 | 9 | 1241.1 | 1 | 11 | 1163.8 |
| 130.0 | 1 | 10 | 1189.2 | 2 | 0 | 1119.9 |
| 167.0 | 2 | 1 | 1039.9 | 2 | 3 | 991.1 |
| 176.0 | 2 | 2 | 1011.0 | 2 | 3 | 965.8 |
| 212.0 | 2 | 5 | 915.1 | 2 | 6 | 880.6 |

SPAN = 150.0 FT (RULING SPAN = 248.0 FT)

| TEMP F | STRINGING SAG FT | STRINGING SAG IN | HORIZONTAL TENSION LB | FINAL SAG FT | FINAL SAG IN | HORIZONTAL TENSION LB |
|---|---|---|---|---|---|---|
| 0.0 | 0 | 9 | 3357.9 | 0 | 10 | 2896.0 |
| 10.0 | 0 | 10 | 2957.6 | 1 | 0 | 2538.8 |
| 30.0 | 1 | 1 | 2335.8 | 1 | 3 | 2031.6 |
| 40.0 | 1 | 2 | 2106.2 | 1 | 4 | 1852.6 |
| 50.0 | 1 | 4 | 1919.3 | 1 | 6 | 1707.7 |
| 60.0 | 1 | 5 | 1766.3 | 1 | 7 | 1588.4 |
| 70.0 | 1 | 6 | 1639.8 | 1 | 8 | 1488.7 |
| 80.0 | 1 | 8 | 1533.8 | 1 | 10 | 1404.1 |
| 90.0 | 1 | 9 | 1443.8 | 1 | 11 | 1331.4 |
| 100.0 | 1 | 10 | 1366.7 | 2 | 0 | 1268.3 |
| 110.0 | 1 | 11 | 1299.7 | 2 | 1 | 1212.9 |
| 120.0 | 2 | 0 | 1241.1 | 2 | 2 | 1163.8 |
| 130.0 | 2 | 1 | 1189.2 | 2 | 3 | 1119.9 |
| 167.0 | 2 | 5 | 1039.9 | 2 | 7 | 991.1 |
| 176.0 | 2 | 6 | 1011.0 | 2 | 7 | 965.8 |
| 212.0 | 2 | 9 | 915.1 | 2 | 10 | 880.6 |

SPAN = 160.0 FT (RULING SPAN = 248.0 FT)

S-11

| TEMP F | STRINGING SAG FT | STRINGING SAG IN | HORIZONTAL TENSION LB | FINAL SAG FT | FINAL SAG IN | HORIZONTAL TENSION LB |
|---|---|---|---|---|---|---|
| 0.0 | 0 | 10 | 3357.9 | 1 | 0 | 2896.0 |
| 10.0 | 1 | 0 | 2957.6 | 1 | 2 | 2538.8 |
| 30.0 | 1 | 3 | 2335.8 | 1 | 5 | 2031.6 |
| 40.0 | 1 | 4 | 2106.2 | 1 | 7 | 1852.6 |
| 50.0 | 1 | 6 | 1919.3 | 1 | 8 | 1707.7 |
| 60.0 | 1 | 7 | 1766.3 | 1 | 10 | 1588.4 |
| 70.0 | 1 | 9 | 1639.8 | 1 | 11 | 1488.7 |
| 80.0 | 1 | 10 | 1533.8 | 2 | 1 | 1404.1 |
| 90.0 | 2 | 0 | 1443.8 | 2 | 2 | 1331.4 |
| 100.0 | 2 | 1 | 1366.7 | 2 | 3 | 1268.3 |
| 110.0 | 2 | 2 | 1299.7 | 2 | 4 | 1212.9 |
| 120.0 | 2 | 4 | 1241.1 | 2 | 6 | 1163.8 |
| 130.0 | 2 | 5 | 1189.2 | 2 | 7 | 1119.9 |
| 167.0 | 2 | 9 | 1039.9 | 2 | 11 | 991.1 |
| 176.0 | 2 | 10 | 1011.0 | 3 | 0 | 965.8 |
| 212.0 | 3 | 2 | 915.1 | 3 | 3 | 880.6 |

SPAN = 170.0 FT (RULING SPAN = 248.0 FT)

| TEMP F | STRINGING SAG FT | STRINGING SAG IN | HORIZONTAL TENSION LB | FINAL SAG FT | FINAL SAG IN | HORIZONTAL TENSION LB |
|---|---|---|---|---|---|---|
| 0.0 | 1 | 0 | 3357.9 | 1 | 1 | 2896.0 |
| 10.0 | 1 | 1 | 2957.6 | 1 | 3 | 2538.8 |
| 30.0 | 1 | 5 | 2335.8 | 1 | 7 | 2031.6 |
| 40.0 | 1 | 6 | 2106.2 | 1 | 9 | 1852.6 |
| 50.0 | 1 | 8 | 1919.3 | 1 | 11 | 1707.7 |
| 60.0 | 1 | 10 | 1766.3 | 2 | 0 | 1588.4 |
| 70.0 | 2 | 0 | 1639.8 | 2 | 2 | 1488.7 |
| 80.0 | 2 | 1 | 1533.8 | 2 | 4 | 1404.1 |
| 90.0 | 2 | 3 | 1443.8 | 2 | 5 | 1331.4 |
| 100.0 | 2 | 4 | 1366.7 | 2 | 7 | 1268.3 |
| 110.0 | 2 | 6 | 1299.7 | 2 | 8 | 1212.9 |
| 120.0 | 2 | 7 | 1241.1 | 2 | 9 | 1163.8 |
| 130.0 | 2 | 9 | 1189.2 | 2 | 11 | 1119.9 |
| 167.0 | 3 | 1 | 1039.9 | 3 | 3 | 991.1 |
| 176.0 | 3 | 2 | 1011.0 | 3 | 4 | 965.8 |
| 212.0 | 3 | 6 | 915.1 | 3 | 8 | 880.6 |

SPAN = 180.0 FT (RULING SPAN = 248.0 FT)

S-11

| TEMP F | STRINGING SAG FT | STRINGING SAG IN | HORIZONTAL TENSION LB | FINAL SAG FT | FINAL SAG IN | HORIZONTAL TENSION LB |
|---|---|---|---|---|---|---|
| 0.0 | 1 | 1 | 3357.9 | 1 | 3 | 2896.0 |
| 10.0 | 1 | 3 | 2957.6 | 1 | 5 | 2538.8 |
| 30.0 | 1 | 7 | 2335.8 | 1 | 9 | 2031.6 |
| 40.0 | 1 | 9 | 2106.2 | 2 | 0 | 1852.6 |
| 50.0 | 1 | 11 | 1919.3 | 2 | 1 | 1707.7 |
| 60.0 | 2 | 1 | 1766.3 | 2 | 3 | 1588.4 |
| 70.0 | 2 | 3 | 1639.8 | 2 | 5 | 1488.7 |
| 80.0 | 2 | 4 | 1533.8 | 2 | 7 | 1404.1 |
| 90.0 | 2 | 6 | 1443.8 | 2 | 9 | 1331.4 |
| 100.0 | 2 | 8 | 1366.7 | 2 | 10 | 1268.3 |
| 110.0 | 2 | 10 | 1299.7 | 3 | 0 | 1212.9 |
| 120.0 | 2 | 11 | 1241.1 | 3 | 1 | 1163.8 |
| 130.0 | 3 | 1 | 1189.2 | 3 | 3 | 1119.9 |
| 167.0 | 3 | 6 | 1039.9 | 3 | 8 | 991.1 |
| 176.0 | 3 | 7 | 1011.0 | 3 | 9 | 965.8 |
| 212.0 | 4 | 0 | 915.1 | 4 | 1 | 880.6 |

SPAN = 190.0 FT (RULING SPAN = 248.0 FT)

| TEMP F | STRINGING SAG FT | STRINGING SAG IN | HORIZONTAL TENSION LB | FINAL SAG FT | FINAL SAG IN | HORIZONTAL TENSION LB |
|---|---|---|---|---|---|---|
| 0.0 | 1 | 2 | 3357.9 | 1 | 5 | 2896.0 |
| 10.0 | 1 | 4 | 2957.6 | 1 | 7 | 2538.8 |
| 30.0 | 1 | 9 | 2335.8 | 2 | 0 | 2031.6 |
| 40.0 | 1 | 11 | 2106.2 | 2 | 2 | 1852.6 |
| 50.0 | 2 | 1 | 1919.3 | 2 | 4 | 1707.7 |
| 60.0 | 2 | 3 | 1766.3 | 2 | 7 | 1588.4 |
| 70.0 | 2 | 6 | 1639.8 | 2 | 9 | 1488.7 |
| 80.0 | 2 | 8 | 1533.8 | 2 | 11 | 1404.1 |
| 90.0 | 2 | 10 | 1443.8 | 3 | 0 | 1331.4 |
| 100.0 | 3 | 0 | 1366.7 | 3 | 2 | 1268.3 |
| 110.0 | 3 | 1 | 1299.7 | 3 | 4 | 1212.9 |
| 120.0 | 3 | 3 | 1241.1 | 3 | 6 | 1163.8 |
| 130.0 | 3 | 5 | 1189.2 | 3 | 7 | 1119.9 |
| 167.0 | 3 | 11 | 1039.9 | 4 | 1 | 991.1 |
| 176.0 | 4 | 0 | 1011.0 | 4 | 2 | 965.8 |
| 212.0 | 4 | 5 | 915.1 | 4 | 7 | 880.6 |

SPAN = 200.0 FT (RULING SPAN = 248.0 FT)

S-11

| TEMP F | STRINGING SAG FT | STRINGING SAG IN | HORIZONTAL TENSION LB | FINAL SAG FT | FINAL SAG IN | HORIZONTAL TENSION LB |
|---|---|---|---|---|---|---|
| 0.0 | 1 | 4 | 3357.9 | 1 | 7 | 2896.0 |
| 10.0 | 1 | 6 | 2957.6 | 1 | 9 | 2538.8 |
| 30.0 | 1 | 11 | 2335.8 | 2 | 2 | 2031.6 |
| 40.0 | 2 | 2 | 2106.2 | 2 | 5 | 1852.6 |
| 50.0 | 2 | 4 | 1919.3 | 2 | 7 | 1707.7 |
| 60.0 | 2 | 6 | 1766.3 | 2 | 10 | 1588.4 |
| 70.0 | 2 | 9 | 1639.8 | 3 | 0 | 1488.7 |
| 80.0 | 2 | 11 | 1533.8 | 3 | 2 | 1404.1 |
| 90.0 | 3 | 1 | 1443.8 | 3 | 4 | 1331.4 |
| 100.0 | 3 | 3 | 1366.7 | 3 | 6 | 1268.3 |
| 110.0 | 3 | 5 | 1299.7 | 3 | 8 | 1212.9 |
| 120.0 | 3 | 7 | 1241.1 | 3 | 10 | 1163.8 |
| 130.0 | 3 | 9 | 1189.2 | 4 | 0 | 1119.9 |
| 167.0 | 4 | 4 | 1039.9 | 4 | 6 | 991.1 |
| 176.0 | 4 | 5 | 1011.0 | 4 | 8 | 965.8 |
| 212.0 | 4 | 11 | 915.1 | 5 | 1 | 880.6 |

SPAN = 210.0 FT (RULING SPAN = 248.0 FT)

| TEMP F | STRINGING SAG FT | STRINGING SAG IN | HORIZONTAL TENSION LB | FINAL SAG FT | FINAL SAG IN | HORIZONTAL TENSION LB |
|---|---|---|---|---|---|---|
| 0.0 | 1 | 6 | 3357.9 | 1 | 8 | 2896.0 |
| 10.0 | 1 | 8 | 2957.6 | 1 | 11 | 2538.8 |
| 30.0 | 2 | 1 | 2335.8 | 2 | 5 | 2031.6 |
| 40.0 | 2 | 4 | 2106.2 | 2 | 8 | 1852.6 |
| 50.0 | 2 | 7 | 1919.3 | 2 | 11 | 1707.7 |
| 60.0 | 2 | 10 | 1766.3 | 3 | 1 | 1588.4 |
| 70.0 | 3 | 0 | 1639.8 | 3 | 4 | 1488.7 |
| 80.0 | 3 | 3 | 1533.8 | 3 | 6 | 1404.1 |
| 90.0 | 3 | 5 | 1443.8 | 3 | 9 | 1331.4 |
| 100.0 | 3 | 7 | 1366.7 | 3 | 11 | 1268.3 |
| 110.0 | 3 | 10 | 1299.7 | 4 | 1 | 1212.9 |
| 120.0 | 4 | 0 | 1241.1 | 4 | 3 | 1163.8 |
| 130.0 | 4 | 2 | 1189.2 | 4 | 5 | 1119.9 |
| 167.0 | 4 | 9 | 1039.9 | 5 | 0 | 991.1 |
| 176.0 | 4 | 11 | 1011.0 | 5 | 1 | 965.8 |
| 212.0 | 5 | 5 | 915.1 | 5 | 7 | 880.6 |

SPAN = 220.0 FT (RULING SPAN = 248.0 FT)

S-11

| TEMP F | STRINGING SAG FT | STRINGING SAG IN | HORIZONTAL TENSION LB | FINAL SAG FT | FINAL SAG IN | HORIZONTAL TENSION LB |
|---|---|---|---|---|---|---|
| 0.0 | 1 | 7 | 3357.9 | 1 | 10 | 2896.0 |
| 10.0 | 1 | 10 | 2957.6 | 2 | 2 | 2538.8 |
| 30.0 | 2 | 4 | 2335.8 | 2 | 8 | 2031.6 |
| 40.0 | 2 | 7 | 2106.2 | 2 | 11 | 1852.6 |
| 50.0 | 2 | 10 | 1919.3 | 3 | 2 | 1707.7 |
| 60.0 | 3 | 1 | 1766.3 | 3 | 5 | 1588.4 |
| 70.0 | 3 | 4 | 1639.8 | 3 | 8 | 1488.7 |
| 80.0 | 3 | 6 | 1533.8 | 3 | 10 | 1404.1 |
| 90.0 | 3 | 9 | 1443.8 | 4 | 1 | 1331.4 |
| 100.0 | 4 | 0 | 1366.7 | 4 | 3 | 1268.3 |
| 110.0 | 4 | 2 | 1299.7 | 4 | 6 | 1212.9 |
| 120.0 | 4 | 4 | 1241.1 | 4 | 8 | 1163.8 |
| 130.0 | 4 | 7 | 1189.2 | 4 | 10 | 1119.9 |
| 167.0 | 5 | 3 | 1039.9 | 5 | 6 | 991.1 |
| 176.0 | 5 | 4 | 1011.0 | 5 | 7 | 965.8 |
| 212.0 | 5 | 11 | 915.1 | 6 | 2 | 880.6 |

SPAN = 230.0 FT (RULING SPAN = 248.0 FT)

| TEMP F | STRINGING SAG FT | STRINGING SAG IN | HORIZONTAL TENSION LB | FINAL SAG FT | FINAL SAG IN | HORIZONTAL TENSION LB |
|---|---|---|---|---|---|---|
| 0.0 | 1 | 9 | 3357.9 | 2 | 1 | 2896.0 |
| 10.0 | 2 | 0 | 2957.6 | 2 | 4 | 2538.8 |
| 30.0 | 2 | 6 | 2335.8 | 2 | 11 | 2031.6 |
| 40.0 | 2 | 10 | 2106.2 | 3 | 2 | 1852.6 |
| 50.0 | 3 | 1 | 1919.3 | 3 | 6 | 1707.7 |
| 60.0 | 3 | 4 | 1766.3 | 3 | 9 | 1588.4 |
| 70.0 | 3 | 7 | 1639.8 | 4 | 0 | 1488.7 |
| 80.0 | 3 | 10 | 1533.8 | 4 | 3 | 1404.1 |
| 90.0 | 4 | 1 | 1443.8 | 4 | 5 | 1331.4 |
| 100.0 | 4 | 4 | 1366.7 | 4 | 8 | 1268.3 |
| 110.0 | 4 | 7 | 1299.7 | 4 | 11 | 1212.9 |
| 120.0 | 4 | 9 | 1241.1 | 5 | 1 | 1163.8 |
| 130.0 | 5 | 0 | 1189.2 | 5 | 4 | 1119.9 |
| 167.0 | 5 | 8 | 1039.9 | 6 | 0 | 991.1 |
| 176.0 | 5 | 10 | 1011.0 | 6 | 2 | 965.8 |
| 212.0 | 6 | 6 | 915.1 | 6 | 9 | 880.6 |

SPAN = 240.0 FT (RULING SPAN = 248.0 FT)

S-11

| TEMP F | STRINGING SAG FT | STRINGING SAG IN | HORIZONTAL TENSION LB | FINAL SAG FT | FINAL SAG IN | HORIZONTAL TENSION LB |
|---|---|---|---|---|---|---|
| 0.0 | 1 | 11 | 3357.9 | 2 | 3 | 2896.0 |
| 10.0 | 2 | 2 | 2957.6 | 2 | 6 | 2538.8 |
| 30.0 | 2 | 9 | 2335.8 | 3 | 2 | 2031.6 |
| 40.0 | 3 | 1 | 2106.2 | 3 | 6 | 1852.6 |
| 50.0 | 3 | 4 | 1919.3 | 3 | 9 | 1707.7 |
| 60.0 | 3 | 8 | 1766.3 | 4 | 1 | 1588.4 |
| 70.0 | 3 | 11 | 1639.8 | 4 | 4 | 1488.7 |
| 80.0 | 4 | 2 | 1533.8 | 4 | 7 | 1404.1 |
| 90.0 | 4 | 6 | 1443.8 | 4 | 10 | 1331.4 |
| 100.0 | 4 | 9 | 1366.7 | 5 | 1 | 1268.3 |
| 110.0 | 5 | 0 | 1299.7 | 5 | 4 | 1212.9 |
| 120.0 | 5 | 2 | 1241.1 | 5 | 7 | 1163.8 |
| 130.0 | 5 | 5 | 1189.2 | 5 | 9 | 1119.9 |
| 167.0 | 6 | 2 | 1039.9 | 6 | 6 | 991.1 |
| 176.0 | 6 | 5 | 1011.0 | 6 | 8 | 965.8 |
| 212.0 | 7 | 1 | 915.1 | 7 | 4 | 880.6 |

SPAN = 250.0 FT (RULING SPAN = 248.0 FT)

| TEMP F | STRINGING SAG FT | STRINGING SAG IN | HORIZONTAL TENSION LB | FINAL SAG FT | FINAL SAG IN | HORIZONTAL TENSION LB |
|---|---|---|---|---|---|---|
| 0.0 | 2 | 1 | 3357.9 | 2 | 5 | 2896.0 |
| 10.0 | 2 | 4 | 2957.6 | 2 | 9 | 2538.8 |
| 30.0 | 3 | 0 | 2335.8 | 3 | 5 | 2031.6 |
| 40.0 | 3 | 4 | 2106.2 | 3 | 9 | 1852.6 |
| 50.0 | 3 | 8 | 1919.3 | 4 | 1 | 1707.7 |
| 60.0 | 4 | 0 | 1766.3 | 4 | 5 | 1588.4 |
| 70.0 | 4 | 3 | 1639.8 | 4 | 8 | 1488.7 |
| 80.0 | 4 | 7 | 1533.8 | 5 | 0 | 1404.1 |
| 90.0 | 4 | 10 | 1443.8 | 5 | 3 | 1331.4 |
| 100.0 | 5 | 1 | 1366.7 | 5 | 6 | 1268.3 |
| 110.0 | 5 | 5 | 1299.7 | 5 | 9 | 1212.9 |
| 120.0 | 5 | 8 | 1241.1 | 6 | 0 | 1163.8 |
| 130.0 | 5 | 11 | 1189.2 | 6 | 3 | 1119.9 |
| 167.0 | 6 | 9 | 1039.9 | 7 | 1 | 991.1 |
| 176.0 | 6 | 11 | 1011.0 | 7 | 3 | 965.8 |
| 212.0 | 7 | 8 | 915.1 | 7 | 11 | 880.6 |

SPAN = 260.0 FT (RULING SPAN = 248.0 FT)

S-11

| TEMP F | STRINGING SAG FT | STRINGING SAG IN | HORIZONTAL TENSION LB | FINAL SAG FT | FINAL SAG IN | HORIZONTAL TENSION LB |
|---|---|---|---|---|---|---|
| 0.0 | 2 | 3 | 3357.9 | 2 | 7 | 2896.0 |
| 10.0 | 2 | 7 | 2957.6 | 3 | 0 | 2538.8 |
| 30.0 | 3 | 3 | 2335.8 | 3 | 9 | 2031.6 |
| 40.0 | 3 | 7 | 2106.2 | 4 | 1 | 1852.6 |
| 50.0 | 3 | 11 | 1919.3 | 4 | 5 | 1707.7 |
| 60.0 | 4 | 3 | 1766.3 | 4 | 9 | 1588.4 |
| 70.0 | 4 | 7 | 1639.8 | 5 | 1 | 1488.7 |
| 80.0 | 4 | 11 | 1533.8 | 5 | 5 | 1404.1 |
| 90.0 | 5 | 3 | 1443.8 | 5 | 8 | 1331.4 |
| 100.0 | 5 | 7 | 1366.7 | 6 | 0 | 1268.3 |
| 110.0 | 5 | 10 | 1299.7 | 6 | 3 | 1212.9 |
| 120.0 | 6 | 1 | 1241.1 | 6 | 6 | 1163.8 |
| 130.0 | 6 | 4 | 1189.2 | 6 | 9 | 1119.9 |
| 167.0 | 7 | 3 | 1039.9 | 7 | 8 | 991.1 |
| 176.0 | 7 | 6 | 1011.0 | 7 | 10 | 965.8 |
| 212.0 | 8 | 3 | 915.1 | 8 | 7 | 880.6 |

SPAN = 270.0 FT (RULING SPAN = 248.0 FT)

| TEMP F | STRINGING SAG FT | STRINGING SAG IN | HORIZONTAL TENSION LB | FINAL SAG FT | FINAL SAG IN | HORIZONTAL TENSION LB |
|---|---|---|---|---|---|---|
| 0.0 | 2 | 5 | 3357.9 | 2 | 10 | 2896.0 |
| 10.0 | 2 | 9 | 2957.6 | 3 | 3 | 2538.8 |
| 30.0 | 3 | 6 | 2335.8 | 4 | 0 | 2031.6 |
| 40.0 | 3 | 11 | 2106.2 | 4 | 5 | 1852.6 |
| 50.0 | 4 | 3 | 1919.3 | 4 | 9 | 1707.7 |
| 60.0 | 4 | 7 | 1766.3 | 5 | 2 | 1588.4 |
| 70.0 | 5 | 0 | 1639.8 | 5 | 6 | 1488.7 |
| 80.0 | 5 | 4 | 1533.8 | 5 | 10 | 1404.1 |
| 90.0 | 5 | 8 | 1443.8 | 6 | 2 | 1331.4 |
| 100.0 | 6 | 0 | 1366.7 | 6 | 5 | 1268.3 |
| 110.0 | 6 | 3 | 1299.7 | 6 | 9 | 1212.9 |
| 120.0 | 6 | 7 | 1241.1 | 7 | 0 | 1163.8 |
| 130.0 | 6 | 10 | 1189.2 | 7 | 4 | 1119.9 |
| 167.0 | 7 | 10 | 1039.9 | 8 | 3 | 991.1 |
| 176.0 | 8 | 1 | 1011.0 | 8 | 6 | 965.8 |
| 212.0 | 8 | 11 | 915.1 | 9 | 3 | 880.6 |

```
* * * PROBLEM 1 IN FUNCTION F1A * * *
 ROOT FAILS FOR F1
```

# APPENDIX D

## Other References

**SILICON VALLEY POWER**

City of Santa Clara

Santa Clara, California

**STANDARD EQUIPMENT SPECIFICATION NO. 6**

Effective March 1983

# SPECIFICATION

# For

# WOOD POLES

By:
*Pasquale R. Greco*
PRINCIPAL ELECTRICAL ESTIMATOR

| Revisions | Approved By | Date | Page Number(s) |
|---|---|---|---|
| 1 | P. Greco | 3-25-83 | All pages |
| 2 | P. Greco | 5-2-84 | All pages |
| 3 | P. Greco | 7-6-90 | All pages |
| 4 | K. Keating/MJK | 23 Aug 2000 | All pages |
| | | | |
| | | | |
| | | | |
| | | | |
| | | | |
| | | | |
| | | | |

## Scope

This specification covers the requirements for fabrication, testing, preparation and delivery of full length Douglas Fir wood poles pressure treated with copper naphthenate.

## General Requirements

All poles furnished shall comply with this specification and the following specifications:

1. American National Standards Institute (ANSI) Standards

   5.1 – 1987 "Specifications and Dimensions for Wood Poles"

2. American Wood-Preservers' Association (AWPA) Standards

   A3-89 "Standard Methods for Determining Penetration of Preservatives and Fire Retardants."

   A5-88 "Standard Methods for Analysis of Oil-Borne Preservatives."

   C1-88 "All Timber Products – Preservative Treatment by Pressure Processes."

   C4-89 "Poles – Preservative Treatment by Pressure Processes."

   M2-89 "Standard for Inspection of Treated Timber Products."

   P8-89 "Standards for Oil-Borne Preservatives."

   P9-87 "Standard for Solvents for Organic Preservative Systems."

## Materials

Materials shall be of the type and grade most suitable for the application and shall conform to industry standards and practices. All materials shall be free of defects, of recent manufacture, and unused.

## Workmanship

Skilled craftsmen, following the best modern practices of the industry, shall perform all work.

## Detailed Requirements

These requirements take precedence over all other requirements referenced in other industry standards.

### A. General

Poles shall be cut from live Pacific Coast Douglas fir timber. Douglas fir, Interior North (Intermountain) timber is not acceptable. Poles shall meet the requirements of ANSI 05.1 with the exception: Poles shall be of uniform taper, with no variations in cross-sectional areas that reduce pole strength.

### B. Defects

The following defects are prohibited:

1. Checks greater than ½ inch in width.
2. Scars that are decayed.
3. Sucker knots, hollow knots, decayed knots, spike knots and fall knots that reduce pole strength.
4. Spiral grain shall not exceed one full turn in 30 feet of length.
5. Minimum ¾ inch of sapwood.
6. The sum of diameters of knots in any one foot zone shall not exceed 1/3 the circumference of pole at that point disregarding knots of ½ inch diameter of less.

### C. Seasoning

Seasoning shall be by the Boulton drying method or a combination of Boulton drying with Air Seasoning. The average moisture content, oven dry basis in the 0.5" to 1.5" zone at mid-length shall not exceed 20% after treatment.

### D. Marking

1. Butt Marking – Semipermanent marks shall be made on the butt of each pole by means of a stamp, brand, or aluminum tag to show length and class of pole.

2. Face Marking – The face of the pole shall be permanently marked or branded in accordance with ANSI 05.1-1987. Marking on the face of the pole shall be either a 2-inch diameter aluminum disc recessed ¼ inch into the pole and securely fastened with an aluminum or galvanized nail, or by a brand burned legibly and enduringly into the pole, at the option of the supplier.

   Face Marking shall include:

   a. The supplier's code or trademark.
   b. The plant location and year of treatment.
   c. Code letters **DFN** denoting Douglas Fir treated with Copper Naphthenate.
   d. The true circumference class numeral and numerals showing the length of the pole.

## E. Preservative Treatment

1. Treatment – All poles shall be full-length treated by an empty-cell process in accordance with AWPA C1 and C4. Poles shall be clean and dry after treatment. Bleeders shall be rejected.

2. Preservative – The preservatives used in the treatment of poles shall be copper naphthenate meeting the requirements of AWPA P8. The solvent used to prepare solutions of copper naphthenate shall comply with AWPA Standard P9, type A.

3. Penetration – Each pole shall be tested for penetration. The minimum penetration for preservative shall be ¾ inch, the minimum penetration of preservative shall be 85% of sap wood up to a maximum of 1-1/2 inch.

4. Retention – The minimum retention of preservative shall be:

| Inches From Surface | Copper Naphthenate llbs./ cu. ft. |
|---|---|
| 0.25 – 1.0 | 0.075 |

## F. Handling

Treated poles shall be handled in a manner that will prevent breaks or punctures in any part of the poles. Poles damaged during handling shall be rejected.

## G. Test Requirements

1. Treatment Tests – Each pole shall be tested in accordance with AWPA M2 to assure compliance with the requirements specified herein. The penetration of preservative shall be tested in accordance with the requirements of AWPA A3. Method 3. The retention of preservative shall be tested in accordance with the requirements of AWPA A5, Method 7.

   Treated poles that do not meet the penetration and retention of preservative requirements of this specification shall be rejected.

2. Preservative Tests – The preservative used in the treating of poles shall be tested in accordance with AWPA M2 and AWPA A5, Method 7, to assure compliance with this specification.

## Rejection of Poles

The City reserves the right to reject poles upon delivery and within 30 days that are defective or below specification requirements. Poles so rejected will be returned to the supplier at the supplier's expense.

## Delivery

Poles are to be delivered to the City of Santa Clara Utilities Service Center Purchasing Warehouse, 1705 Martin Avenue, Santa Clara, CA 95050. The delivery truck is to supply unloading equipment. The supplier shall notify City at (408) 984-3056 three days in advance of delivery. Deliveries are to be made before 2:00 P.M.

# OH 60kV Units Bin Items

| Bin | Description | Catalog Number |
|---|---|---|
| 70017 | BOLT - Sq hd - 5/8" dia. x 18" lg. w/6" thd. & nut, galv. | AB Chance #8818 Cooper #DF3B18 Joslyn #J8818 |
| 70018 | BOLT - Sq hd - 5/8" dia. x 20" lg. w/6" thd. & nut, galv. | AB Chance #8820 Cooper #DF3B20 Joslyn #J8820 |
| 70019 | BOLT - Sq hd - 5/8" dia. x 22" lg. w/6" thd. & nut, galv. | AB Chance #8822 Cooper #DF3B22 Joslyn #J8822 |
| 70020 | BOLT - Sq hd - 5/8" dia. x 24" lg. w/6" thd. & nut, galv. | AB Chance #8824 Cooper #DF3B24 Joslyn #J8824 |
| 70042 | WASHER - Lock - 316 stn. stl. - 3/4", helical spring, (0.763" I.D. x 1/279" O.D. x 0.188" tk.) | |
| 70043 | WASHER - Lip - 3" x 3" x 1/4" with 5/8" lip and 3/4"-10 UNC tapped hole. | INWESCO #96B40 Kortick #1646 |
| 70044 | WASHER - Flat - galv. steel - 3/4". | Joslyn #J1089 |
| 70046 | WASHER - Square - flat - 2-1/4" x 2-1/4" x 3/16" with 11/16" dia. hole, galv. steel. | Kortick #K1570 A.B.Chance #6813 Joslyn #J1075 |
| 70049 | WASHER - Square - curved - 4" x 4" with 13/16" dia. hole. | Bethea National #WC-44-6 |
| 70050 | WASHER - Square - curved - 3" x 3" with 13/16" dia. hole. | Bethea National #WC-33-6 Josyln #P143A |
| 70059 | BOLT - All thread - 3/4" x 18"lg. with 4 nuts. | AB Chance #8888 Cooper #DF3D18 |
| 70060 | BOLT - All thread - 3/4" x 22"lg. with 4 nuts. | AB Chance #8892 Cooper #DF3D22 |
| 70061 | BOLT - All thread - 3/4" x 24"lg. with 4 nuts. | Joslyn #J8894 Cooper #DF3D24 |
| 70065 | EYENUT - Oval - 3/4" tapped bolt hole, & 1-3/8" to 1-1/2" eye opening, forged steel, hot dipped galvanized. (For HG's & DG's). | AB Chance #6503 Cooper #DG2E4 Joslyn #J1093 |
| 70078 | WASHER - Lock - double coil - 3/4", hot dip galv. steel. | AB Chance #C2050187 Joslyn #J178 |
| 70091 | BOLT - Sq hd - 3/4" dia. x 22" lg. w/6" thd. & nut, galv. | AB Chance #8922 Cooper #DF4B22 Joslyn #8922 |
| 71152 | CLAMP - Dead end - Secondary - 4/0 thru 750 Al XLPE & 250 thru 750 Cu XLPE, conductor range of 0.62" to 1.25". | Ohio Brass #91580 Alcoa #E223.4 Bethea National #ASD-58-N |
| 71173 | CLAMP - Trunnion - insulator - 1.5" to 2.0" cable range, for use with clamp top or horizontal line post insulators, use w/954 AL armor rod (1.746" O.D.). | Anderson #TSC200 Bethea #ACTS-200 C&R Products #CR-TC-4 Lindsey #1128 Ohio Brass #270663 |
| 71174 | CLAMP - Double trunnion for bundled conductors with 4-11/16" dia. holes on a 5/8" bolt circle for mounting on top of a vertical post type insulator. | Lindsey #2123 |
| 71179 | CONNECTOR - OH - Comp - full-ten - 954 to 954 Al. | Alcoa #7030.122 |
| 71180 | CONNECTOR - OH - Comp - non-ten - 954 to 954 Al. | Homac #AC-1000 |
| 71185 | CLAMP - Trunnion - insulator - angle - 1.5" to 2" cable range, for use with clamp top or horizontal line post insulators. For use with 954 Al with armor rod (1.746"). Max line angle of 30 deg. | Continental Elect #PAC-200F Lapp #80485 |
| 71188 | CLAMP - Suspension - insulator - 1.25" to 1.92" cable range, with socket adaptor. For use with insulator strings. For 954 Al with armor rods (1.746"). | Anderson #HAS-182-S Bethea # LS-8-S C&R #CRSC-7-S |
| 71189 | CLAMP - Trunnion - insulator - 1.000" to 1.500" cable range, for use with clamp top or horizontal line post insulators. For use with 954 (1.126" O.D.) bare jumpers. | Anderson #TSC-150 American Connector Engineering #TALS-150 Bethea National # ACTS-150 C&R Products #CRTC-3 Lindsey #1124 |
| 71190 | CLAMP - Dead end - 60kv - 954 MCM Al with socket attachment, clamping range of 0.710" to 1.318", and a working load of 15,000 lb. | Anderson #SD-130-S Bethea #ADE-2526S C&R Products #CR-50-60 Ohio Brass #86561 |
| 71191 | SPACER - For 954 Al twin OH conductors. | ALCOA #1794.13G |
| 72117 | NUT - Hex - galv. stl. - 3/4"-10 UNC. | |
| 72163 | SIGN - "HIGH VOLTAGE" Tenite butyrate (plastic) in chrome yellow (#460-A-23321-MS), .080" plus or minus .010" thick, with molded in tear off groove. Per PG & E dwg. #015070 sh.1 rev.3 part 1. Send sample with order. | Precision Plastics |

# OH 60kV Units Bin Items

| Bin | Description | Catalog Number |
|---|---|---|
| 73058 | INSULATOR - 60kV - Suspension - Silicone rubber - dead end, single string, w/ball on one end and eye on other, sky-gray. (15,000 lb. working load). | Reliable #S598048AX00 |
| 77099 | SOCKET - EYE - 13/16" dia. hole, 52-3 ANSI class socket, & 15,000 lb. working load. (For 60kv lines). | Ohio Brass #93603 |
| 77100 | SOCKET - EYE - 1-1/16" dia. hole, 52-3 ANSI class socket, & 15,000 lb. working load. (For 60kv lines). | Ohio Brass #93606 |
| 77104 | EYE - Ball - elongated opening, Hot dipped galv, 15,000 lb working load. (For dead ending 60kv insulators to anchor shackle eye plate mounted on pole). | Ohio Brass #70776 |
| 77119 | SHACKLE - anchor - with clevis pin and cotter key. | Anderson #AS-25-L Bethea National #ASH-55 |
| 77136 | PLATE - U-bolt - 60kv - 4-1/2"x 2"x 1/4" per PG&E dwg 06575 change 8 code 18-8269. | |
| 77151 | EXTENSION - Link - 3/16"x 1-1/4"x 10"lg. with pin on one end, hot dipped galvanized. (The extensions in stock are 5" lg. and no longer available. If a 10" is required use two 5" connected together). | Cooper #DC33B3 |
| 79040 | INSULATOR - 60kv - Horiz. Line Post - single 954 Al - porcelain, sky-gray, with gainbase, and trunnion mount with 5/8"x2"lg. pintle bolt and jam nut. (For field replacement). | Ohio Brass #43770-7008 |
| 79041 | INSULATOR - 60kv - Horizontal line post, single 954 Al porcelain, sky gray, trunnion mount, 5/8" x 2" lg. pintle bolt & jam nut and gain base. | Cancel bin when empty. |
| 79042 | INSULATOR - 60kv - Vertical Line Post - single 954 Al - clamp type, Sky Gray, and 3/4" stud base. (For field replacement only). | Newell #43790-sky gray |
| 79043 | INSULATOR - 60kV - Horiz. Line Post - single 954 Al - porcelain, sky gray, 3/4" stud base w/o clamp, and trunnion mount with 5/8"x 2"lg. pintle bolt with hex jam nut. | Cancel bin when empty. Ohio Brass #48529 Lapp #58707 |
| 79044 | INSULATOR - 115kV - 100" creepage - Horiz. Line Post - single 954 Al - Porcelain, sky-gray, with gain base, and trunnion mount with 5/8"x 2" pintle bolt and hex jam nut. (For 60kv lines, use whenever possible). | Cancel bin when empty. Lapp #58707-N70 |
| 81016 | WIRE - Bare - Al - 954 MCM, 37 str., 1.126" O.D. Order 4880 lb. reel (5,450'), max. 72" dia. x max. 52" wide non-returnable. Code - Magnolia. | 896.1 lbs/1000 ft., 0.896 lbs/ft., 16,860 lb ultimate strength. |
| 82028 | YOKE - Strain, 60kv with socket clevis and 2 ball clevises assembled. | Ohio Brass 1-79619 yoke, 1-SC-30 skt clev, & 2-70689 ball clevis assemb. Bethea National 1-ASM-6213-4 yoke, 1-SC-55 skt clev, & 2-CB-55 ball clevis assembled. |
| 83172 | ANCHOR - Guy - Screw - Single - 10" with 1-1/2" Hub & 1"dia. x 7'tripleye rod. | AB Chance #C102-1148 Dixie #D-110100T Joslyn #J23738CAB.2 anchor, #J12255R rod, #J12585 eye |
| 83173 | ANCHOR - Guy - Screw - Double - 10" with 1-1/2" hub & 1"dia. x 7'tripleye rod. | AB Chance #C102-1160 Dixie #D-210100-T Joslyn #J23739 CAB.2 anchor, #J12255R rod, #J12585 eye |
| 89046 | GUARD - Line - 954 Al, 51"lg., 15 rods/set. | Preformed #MG-0157 |
| 93086 | INSULATOR - 60kV - 53" creepage - Horiz. Line Post - twin 954 Al - porcelain, sky gray, w/double trunnion mount for twin 954. Trunnion shall include 5/8"x 2"lg. pintle bolt with hex jam nut. | Lapp #305522LN-70 (80kV with 53" creepage). |
| 93089 | INSULATOR - 60kV - Horiz. Line Post - single 954 Al - rubber, sky-gray, with gain base, and trunnion mount with 5/8"x 2"lg. pintle bolt and jam nut. | Ohio Brass #402069-0100 (Order ea. with 5/8"x 2"lg. pintle bolt & jam nut). |

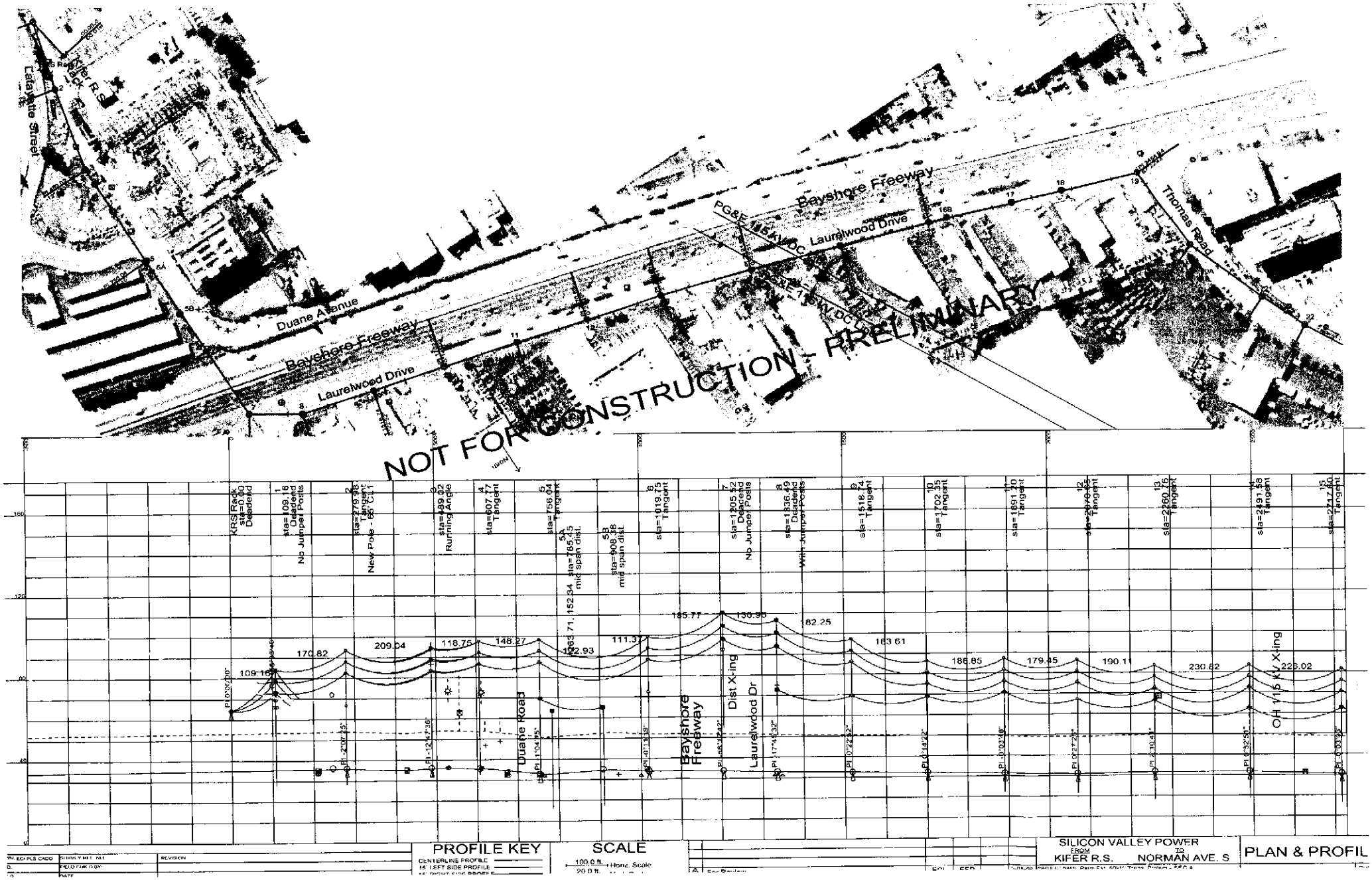

NOT FOR CONSTRUCTION - PRELIMINARY
Lafayette Street
Kifer R.S.
Duane Avenue
Bayshore Freeway
Laurelwood Drive
PG&E 115 kV DC
Thomas Road
KRS Rack sta=0.00 Deadend
sta=109.16 Deadend No Jumper Posts
sta=279.98 Tangent New Pole - 65' CL1
sta=489.02 Running Angle
sta=607.77 Tangent
sta=756.04 Tangent
sta=785.45 mid span dist.
sta=908.38 mid span dist.
sta=1019.75 Tangent
sta=1205.52 Deadend No Jumper Posts
sta=1336.49 Deadend With Jumper Posts
sta=1518.74 Tangent
sta=1702.35 Tangent
sta=1891.20 Tangent
sta=2260.76 Tangent
sta=2491.58 Tangent
sta=2717.60 Tangent
109.16
170.82
209.04
118.75
148.27
122.93
111.37
185.77
130.98
182.25
163.61
186.85
179.45
190.11
230.82
228.02
Duane Road
Bayshore Freeway
Dist X-ing
Laurelwood Dr
OH 115 kV X-ing
PROFILE KEY
CENTERLINE PROFILE
15' LEFT SIDE PROFILE
SCALE
100.0 ft. Horiz. Scale
20.0 ft.
SILICON VALLEY POWER
FROM KIFER R.S.
TO NORMAN AVE. S
PLAN & PROFIL

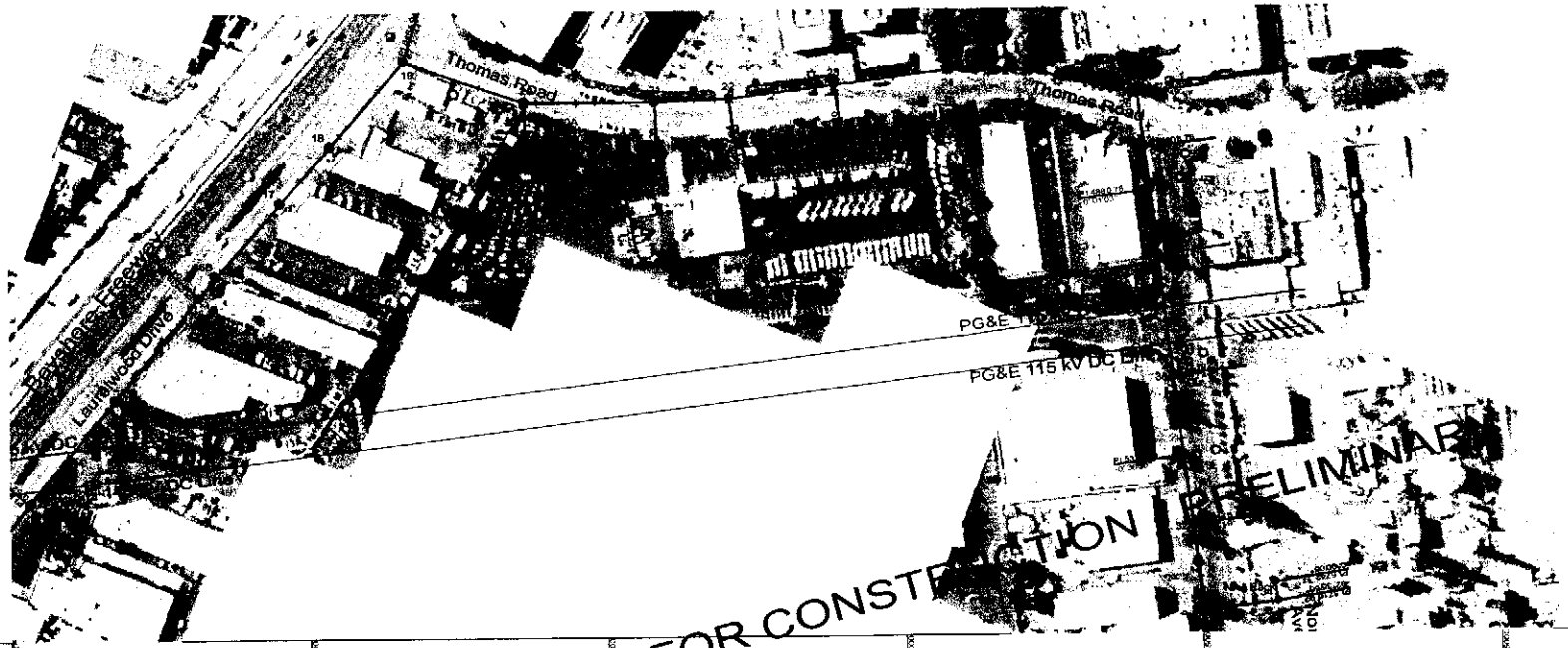


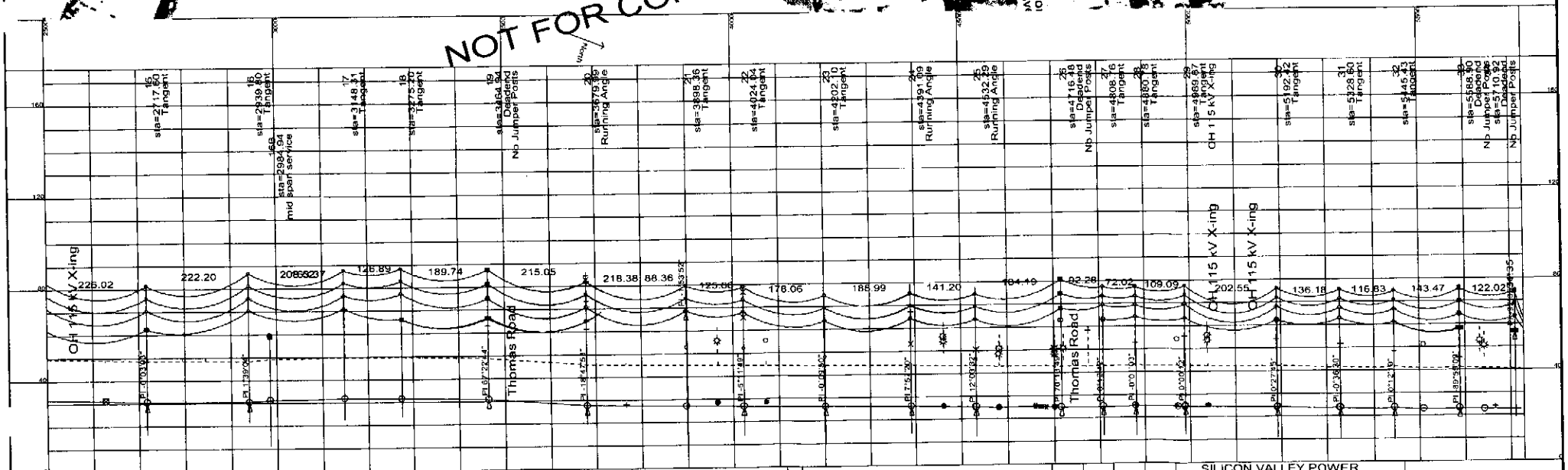


| | | | |
|---|---|---|---|
| DRAWN: EOI PLS CADD | SURVEY REF. NO | REVISION: | |
| CHK'D: | FIELD CHK'D BY: | | |
| APPV'D: | DATE | | |
| DATE: | FILE/DISK: Pole | | |

**PROFILE KEY**

CENTERLINE PROFILE
15' LEFT SIDE PROFILE
15' RIGHT SIDE PROFILE
CENTERLINE PROPOSED

**SCALE**

100.0 ft. Horiz. Scale
20.0 ft. Vert. Scale

| REV | CHANGE | DRAWN | CHK'D | APPV'D | DATE |
|---|---|---|---|---|---|
| A | For Review | ECI | EEP | | 5-05-08 |

SILICON VALLEY POWER
FROM KIFER R.S. TO NORMAN AVE. S

PROJECT NAME Pater Ext. 60kV Trans. Project - SEG A
SUBJECT
CONST ORDER

**PLAN & PROFILE**

SVP-002

SHEET 2

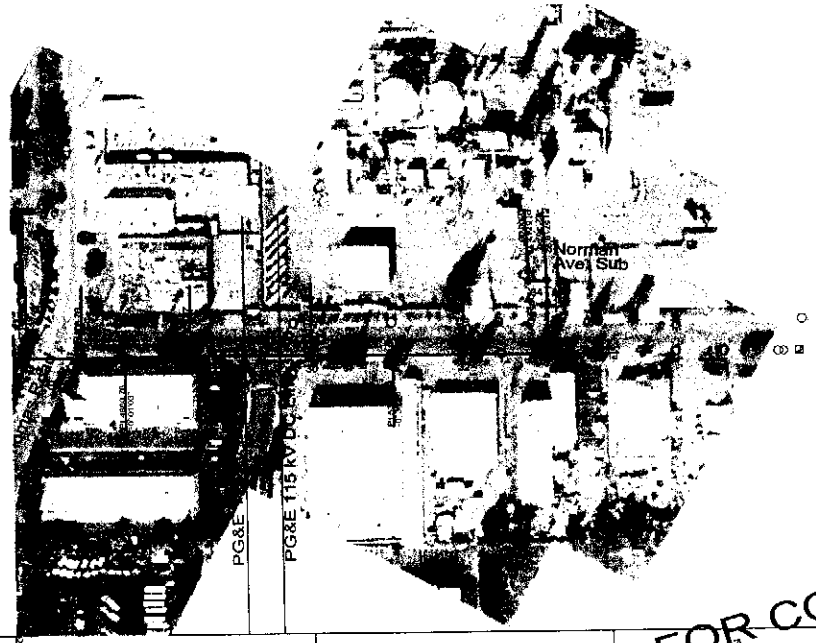


NOT FOR CONSTRUCTION - PRELIMINARY

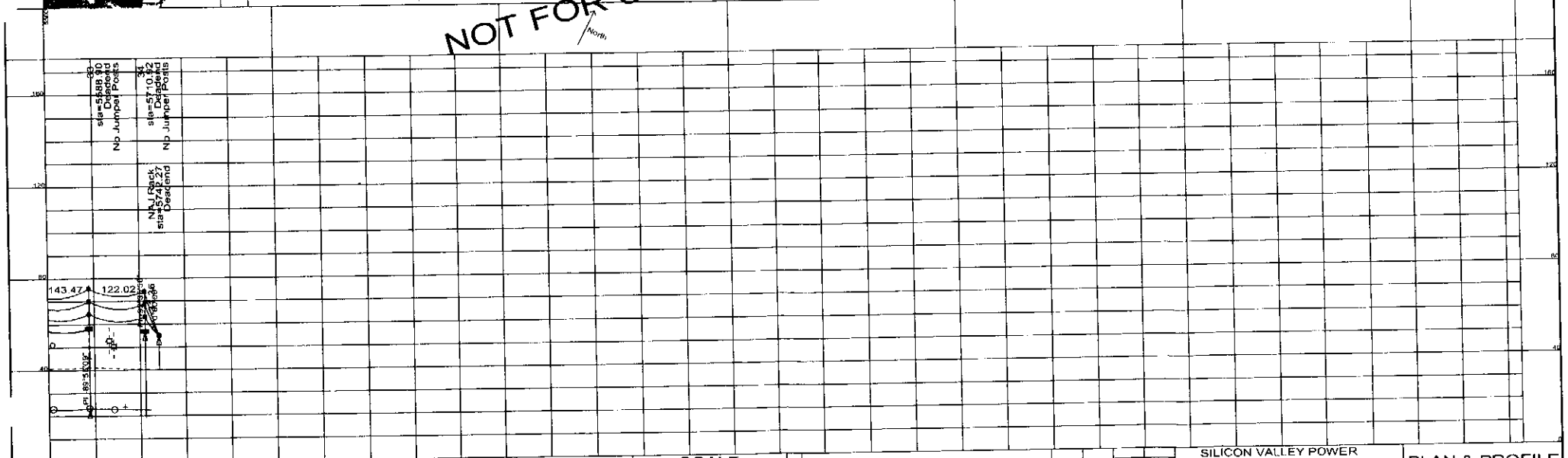


| | | | |
|---|---|---|---|
| DRAWN: ECI/PLS-CADD | SURVEY REF. NO. | REVISION | |
| CHK'D: | FIELD CHK'D BY | | |
| APPV'D: | DATE: | | |
| DATE: | FILE/DISK: Pdm | | |

**PROFILE KEY**

CENTERLINE PROFILE
15' LEFT SIDE PROFILE
15' RIGHT SIDE PROFILE
CENTERLINE PROPOSED

**SCALE**

100.0 ft. Horz. Scale
20.0 ft. Vert. Scale

| REV | CHANGE | DRAWN | CHK'D | APPV'D | DATE |
|---|---|---|---|---|---|
| A | For Review | ECI | EEP | | 5-05-08 |

SILICON VALLEY POWER
FROM KIFER R.S. TO NORMAN AVE. S

PROJECT NAME: Palm Ext. 60kV Trans. Project - SEG A

SUBSET | COVER SHEET

**PLAN & PROFILE**

SVP-002

SHEET 3

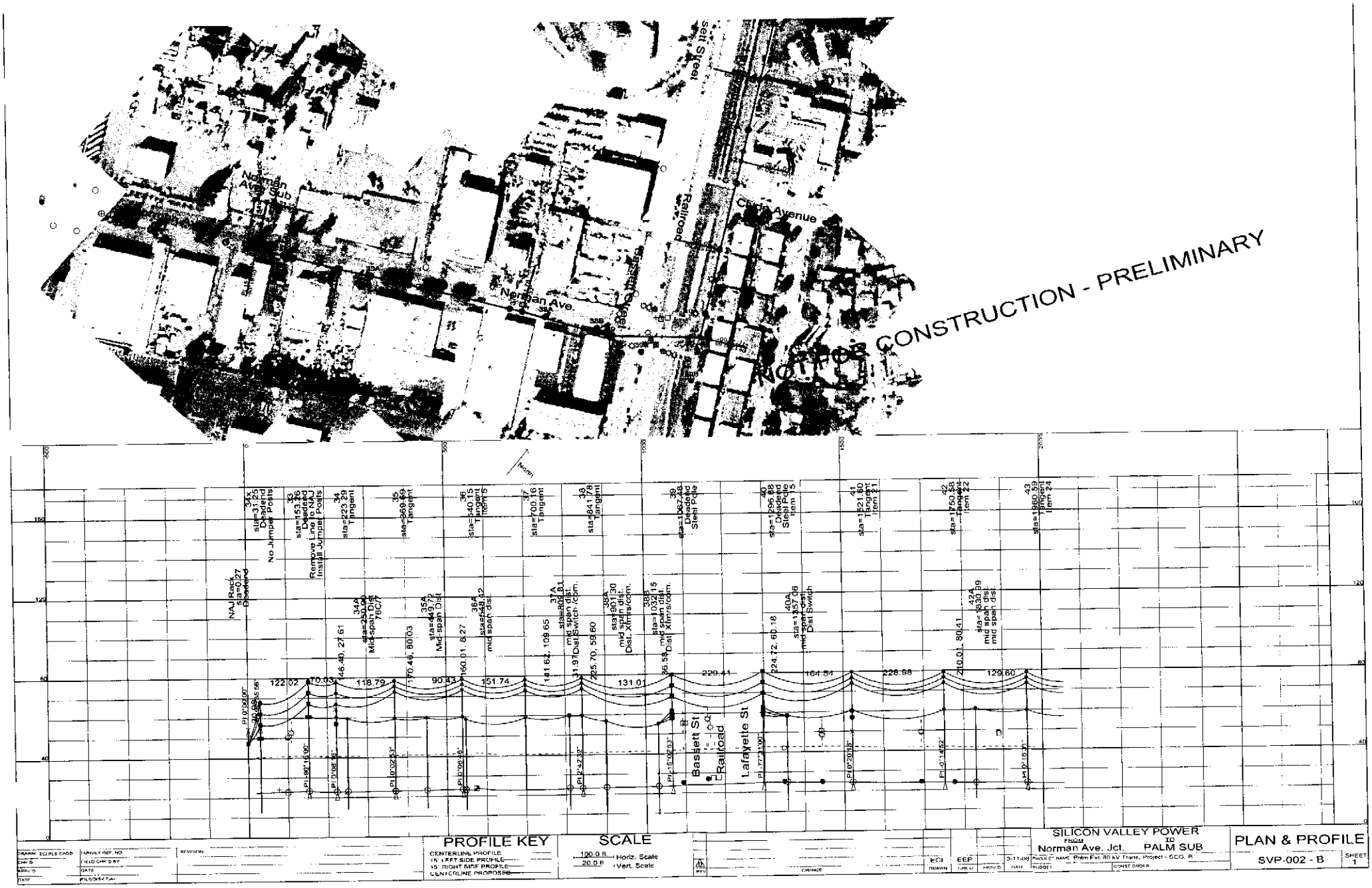

Norman Ave. Sub
Norman Ave.
Railroad
Clyde Avenue
NOT FOR CONSTRUCTION - PRELIMINARY
North
NAJ Rack sta=0.27 Deadend
34x sta=31.25 Deadend No Jumper Posts
33 sta=153.26 Deadend Remove Line to NAJ Install Jumper Posts
34 sta=223.29 Tangent
35 sta=369.69 Tangent
36 sta=540.15 Tangent Item 5
37 sta=700.16 Tangent
38 sta=841.78 Tangent
39 sta=1067.48 Deadend Steel Pole
40 sta=1296.88 Deadend Steel Pole Item 15
41 sta=1521.60 Tangent Item 21
42 sta=1750.58 Tangent Item 22
43 sta=1960.59 Tangent Item 24
34A sta=250.00 Mid-span Dist 76C/7
35A sta=449.72 Mid-span Dist
36A sta=548.42 mid span dist.
37A sta=809.81 mid span dist. Dist Switch /com.
38A sta=901.30 mid span dist. Dist. Xfmrs/com.
38B sta=1032.15 mid span dist. Dist Xfmrs/com.
40A sta=1357.06 mid span dist. Dist Switch
42A sta=1830.99 mid span dist. mid span dist.
122.02
70.03
118.79
90.43
151.74
131.01
229.41
164.54
228.98
129.60
Bassett St
Railroad
Lafayette St
PROFILE KEY
CENTERLINE PROFILE
15' LEFT SIDE PROFILE
15' RIGHT SIDE PROFILE
CENTERLINE PROPOSED
SCALE
100.0 ft. Horiz. Scale
20.0 ft. Vert. Scale
SILICON VALLEY POWER
FROM Norman Ave. Jct.
TO PALM SUB
PLAN & PROFILE
SVP-002 - B
SHEET 1

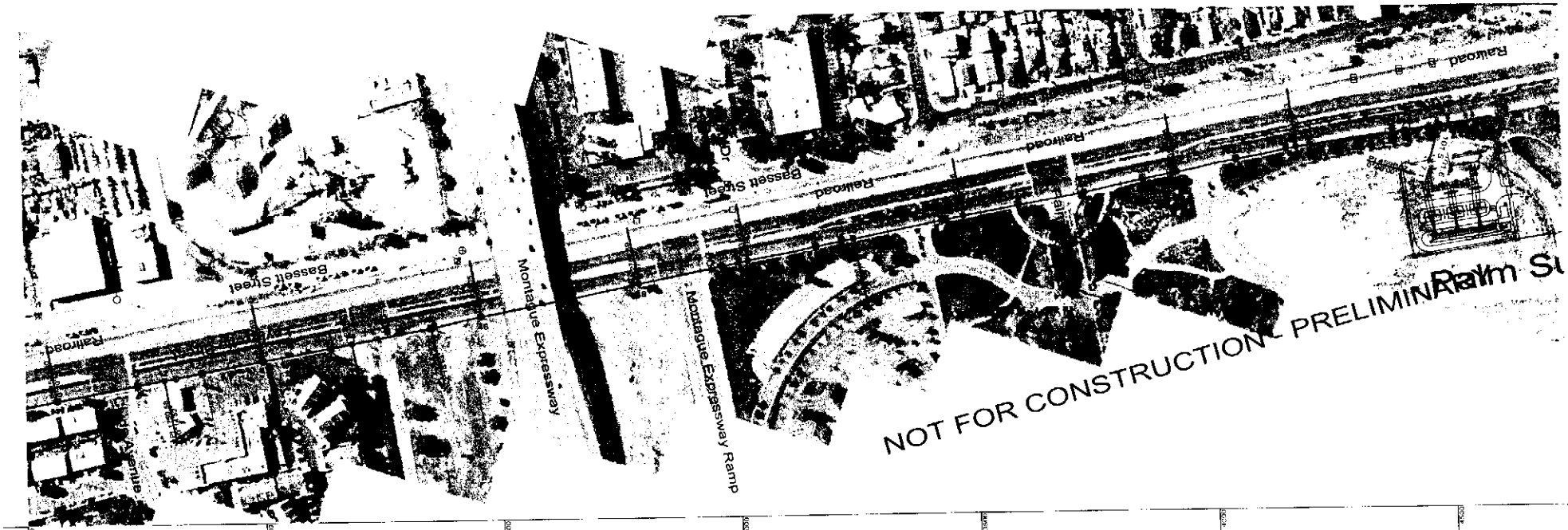


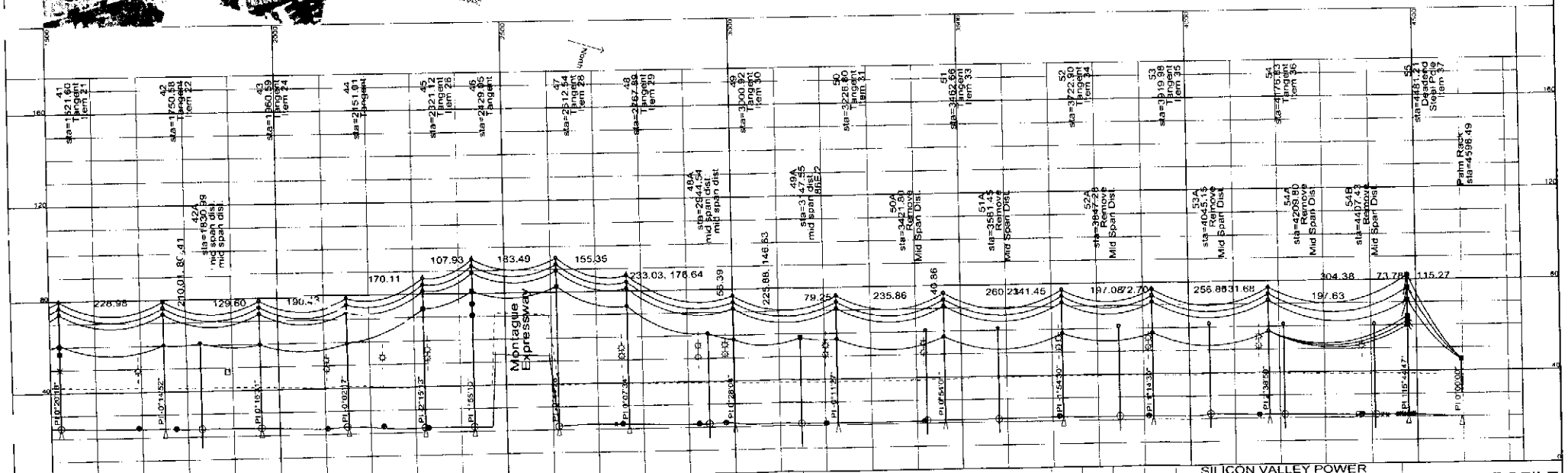


PROFILE KEY
CENTERLINE PROFILE
15' LEFT SIDE PROFILE
15' RIGHT SIDE PROFILE
CENTERLINE PROPOSED

SCALE
100.0 ft. — Horiz. Scale
20.0 ft. — Vert. Scale

SILICON VALLEY POWER
FROM Norman Ave. Jct. TO PALM SUB

PLAN & PROFILE
SVP-002 - B
SHEET 2

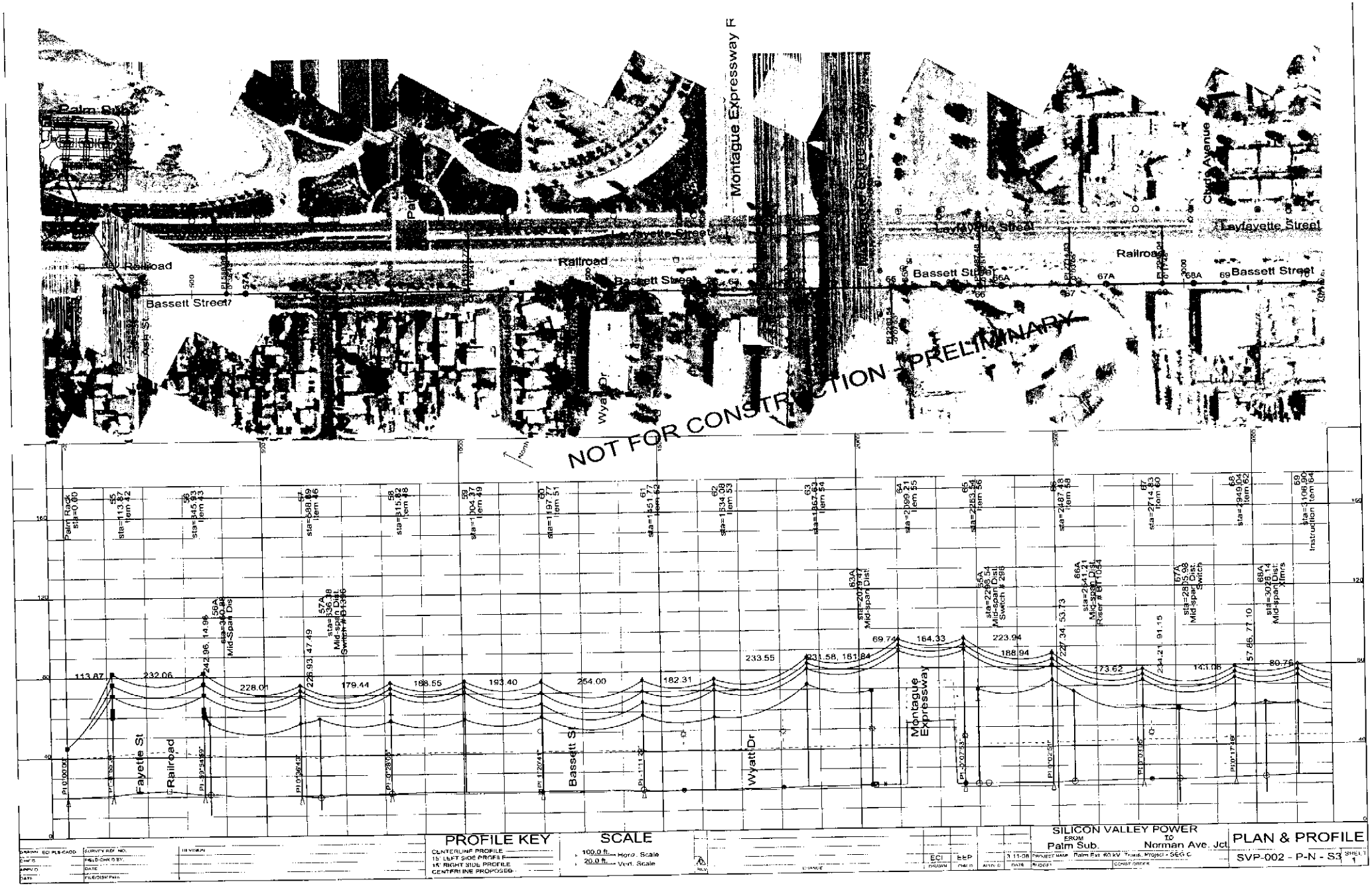

Palm Sub
Montague Expressway R
Clyde Avenue
Layfayette Street
Railroad
Bassett Street
Wyatt Dr
NOT FOR CONSTRUCTION - PRELIMINARY
Palm Rack sta=0.00
sta=113.87 Item 42
sta=345.93 Item 43
sta=688.89 Item 46
sta=815.82 Item 48
sta=1004.37 Item 49
sta=1197.77 Item 51
sta=1451.77 Item 52
sta=1634.08 Item 53
sta=1867.63 Item 54
sta=2099.21 Item 55
sta=2263.54 Item 56
sta=2487.48 Item 58
sta=2714.83 Item 60
sta=2949.04 Item 62
sta=3106.90 Item 64
Instruction
Fayette St
Railroad
Bassett St
Wyatt Dr
Montague Expressway
113.87
232.06
242.96, 14.96
228.01
226.93, 47.49
179.44
188.55
193.40
254.00
182.31
233.55
231.58, 161.84
69.74
164.33
223.94
188.94
227.34, 53.73
173.62
234.21, 91.15
141.06
57.86, 77.10
80.76
PROFILE KEY
CENTERLINE PROFILE
15' LEFT SIDE PROFILE
15' RIGHT SIDE PROFILE
CENTERLINE PROPOSED
SCALE
100.0 ft. Horiz. Scale
20.0 ft. Vert. Scale
SILICON VALLEY POWER
FROM Palm Sub.
TO Norman Ave. Jct.
PLAN & PROFILE
SVP-002 - P-N - S3
SHEET 1

NOT FOR CONSTRUCTION - PRELIMINARY

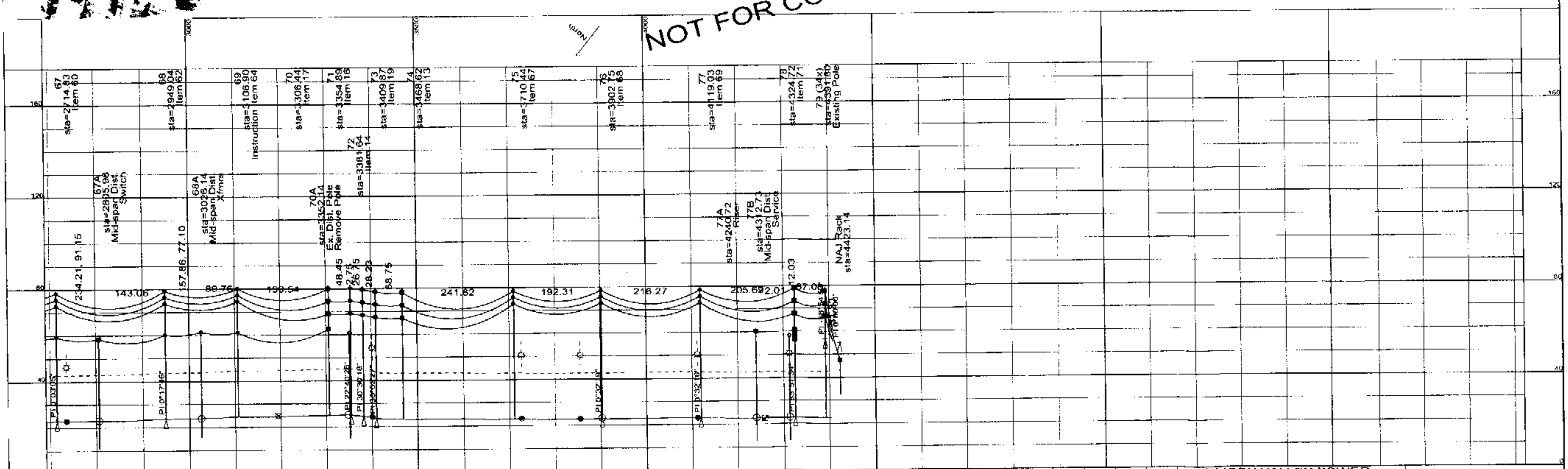


| | | | |
|---|---|---|---|
| PROFILE KEY | SCALE | SILICON VALLEY POWER FROM Palm Sub. TO Norman Ave. Jct | PLAN & PROFILE |
| CENTERLINE PROFILE | 100.0 ft. Horiz. Scale | 3-11-08 Palm Ext. 60 kV Trans. Project - Seg C | SVP-002 - P-N - S3 |
| 15' LEFT SIDE PROFILE | 20.0 ft. Vert. Scale | ECI DRAWN / EEP CHK'D | SHEET 2 |
| 15' RIGHT SIDE PROFILE | | | |
| CENTERLINE PROPOSED | | | |

DRAWN ECI PLS-CADD · SURVEY REF. NO. · FIELD CHK'D BY · DATE · FILE/DISK · REVISION · CHANGE